PGR®
DRIVE TECHNOLOGIES

Planet Dişli Üniteleri

Planetary Gear Units

Planetengetriebe

Riduttori Epicicloidali

Réducteur Planétaire

Reductores Epicicloidales

PL/PLB SERIES

IE2 IE3

K.No: PL/PLB 07/2018

TR EN DE IT FR ES

PGR®
DRIVE TECHNOLOGIES

Kataloğumuzda yer alan bilgileri, önceden haber vermeksizin kısmen veya tamamen değiştirme veya iptal etme hakkını saklı tutmaktayız.

We reserve the right to our company to make changes or modifications to catalogue without prior notice.

Eine änderung in diesem Katalog der Technischen Werte sowie Daten und Maßen und Gewichte bleiben vorbehalten

PGR®

DRIVE TECHNOLOGIES

PGR® DRIVE TECHNOLOGIES

İÇİNDEKİLER / INDEX / INHALT / INDICE / SOMMAIRE / INDICE

GİRİŞ / INTRODUCTION / INTRODUKTION / INTRODUZIONE / INTRODUCTION / INTRODUCCIÓN	
Ürün Tanıtımı / Product Identification / Produktbeschreibung / Designazione Prodotto / Designation Produit / Designación Producto	4-9
Teknik Bilgiler / Technical Information / Technische Eigenschaften / Caratteristiche Tecniche / Caracteristiques Techniques / Características Técnicas	10-37
Montaj - Bakım / Installation Maintenance / Einbau Wartung / Installazione / Manutenzione / Installation Entreten / Instalación Mantenimiento	38-43
Yağlama / Lubrication / Schmierung / Lubrificazione / Lubrification / Lubricación	44-65
Yardımcı Soğutma Sistemleri / Auxiliary Cooling Systems /Zusätzliche Kühlsysteme / Sistemi Ausiliari di Raffreddamento / Systèmes Auxiliaires de Refroidissement / Sistemas Auxiliares de Refrigeración	66-73
Montaj Pozisyonları / Mounting Positions Einbauposition / Posizionoi di Montaggio / Positions de Montage / Posiciones de Montaje	74-77
Sonsuz Dişlili Redüktör Adaptörü / Worm Gearbox Adaptors / Anschluss Für Schneckengetriebe / Predisposizioni Per Riduttori a Vite Senza Fine / Adaptation Pour Reducteurs a Vis Sans Fin / Acoplamiento Para Reductores de Tornillo Sin Fin	78-84
Giriş Aksesuarları / Input Fittings / Antriebsbauteile / Accessori Entrata / Accessoires D'entree / Accesorıos de Entrada	85
Modüler Frenler / Modular Brakes / Brems Module / Freni Moduları / Freins Modulaires / Frenos Modulares	86-87
Giriş Milleri / Input Shaft / Antriebswellen / Alberi Entrata / Arbres D'entree / Ejes de Entrada	88-91
Frensiz Motor Adaptörü / Direct Input Motor Adaptor Without Brake / Standardantrieb Ohne Bremse Mit Motorflansch Entrate Dirette Senza Freno Con Attacco Motore / Entrée Standard Sans Frein Pour Adaptation Moteur / Entradas Directas Sin Freno Para Acoplamiento Motor	92
Frenli Motor Adaptörü / Direct Input Motor Adaptor With Brake / Motorflansch Mit Integrierter Bremse / Entrate Dirette Con Freno E Attacco Motore / Entrée Directe Avec Frein Pour Adaptation Moteur / Entradas Directas Con Freno Para Acoplamiento Motor	93-98
Hidrolik Motor Kaplinleri / Hidraulic Motor Couplings / Anbauvorrichtung Fuer Hydraulıkmotore / Predisposizioni Per Motori Idraulici / Adaptations Pour Moteurs Hydraulique / Acoplamiento Para Motores Hidráulicos	99-101
SAEJ 744C Standartlarına Göre Motor Bağlantı Flanşı / Flanges For Motors According to the SAEJ 744C STD / Flansche Für Motore NachSAEJ 744C-Norm / Flangiature Per Motori a Norme SAEJ 744C / Embridados Para Motores Según Normas SAEJ 744C	102
Elektrik Motor Adaptörleri / Electric Motor Couplings / Anbauvorrichtung für Elektromotore / Predisposizioni Per Motori Elettrici / Adaptations Pour Moteurs Electriques / Acoplamientos Para Motores Eléctricos	103
Semboller / Symbols / Symbole / Simbologia / Symboles / Simbolos	104
PAM B5/B14 Ölçüleri / Dimensions / Abmessungen / Dimensioni / Encombrements / Dimensiones	105
MOTORLU SEÇİM TABLOLARI / SELECTİON TABLES OF GEAREDMOTORS / AUSWAHLTABELLE VON GETRİEBEMOTOREN / TABELLA Dİ SELEZİONE Dİ MOTORİDUTTORİ / TABLEAU DE SÉLECTİON DU MOTOREDUCTEURS / TABLA DE SELECCİÓN DE MOTORREDUCTORES	107-299
TEKNİK VERİLER / TECHNICAL DATA / TECHNISCHE DATEN / DATI TECNICI / DONNÉES TECHNIQUES / DATOS TÉCNICAS **ÇIKIŞ ÖLÇÜLERİ / OUTPUT DIMENSIONS / AUSGABEABMESSUNGEN / DIMENSIONI USCITA / DIMENSIONS DE SORTIE / DIMENSIONES DE SALIDA (MS / MC / MSF / MCF / PS / PC / F / FS / CPC)** **GİRİŞ ÖLÇÜLERİ / INPUT DIMENSIONS / EINGANGSMESSUNGEN / DIMENSIONI ENTRATA / DIMENSIONS D'ENTREE / DIMENSIONES DE ENTRADA (IEC / PMRV / PKD / EL / EML / EM / EP)** **AKSESUARLAR / ACCESSORIES / ZUBEHÖR / ACCESSORI / ACCESSOIRES / ACCESORIOS (YZ / BS / FL / FF / KB / GA)** **RADYAL YÜKLER / OVERHUNG LOAD / QUERBELASTUNGEN / CARİCHİ RADİALİ / CHARGES RADİALES / CARGAS RADİALES**	301-704
PL/PLB 1000	301 - 320
PL/PLB 1600	323 - 342
PL/PLB 2500	345 - 365
PL/PLB 5000	367 - 387
PL/PLB 7000	389 - 405
PL/PLB 10000	407 - 423
PL/PLB 16000	425 - 447
PL/PLB 18000	449 - 471

İÇİNDEKİLER / INDEX / INHALT / INDICE / SOMMAIRE / INDICE

PL/PLB 25000	473 - 491
PL/PLB 30000	493 - 511
PL/PLB 35000	513 - 531
PL/PLB 50000	533 - 551
PL/PLB 65000	553 - 571
PL/PLB 90000	573 - 587
PL/PLB 130000	589 - 601
PL/PLB 170000	603 - 615
PL/PLB 220000	617 - 629
PL/PLB 250000	631 - 643
PL/PLB 300000	645 - 657
PL/PLB 380000	659 - 671
PL/PLB 460000	673 - 685
PL/PLB 550000	687 - 694
PL/PLB 620000	697 - 704
EK / APPENDIX / ANHANG / APPENDICE / ANNEXE / ANEXO	
Elektrik Motoru / Electrical Motor / Elektromotoren / Motori Elettrici / Moteurs Électriques / Motores Eléctricos	706 - 726
Motor Parça Listesi / Motor Parts List / Motor Teil List / Partı Motore List / Pièces de Moteur Liste / Pıezas del Motor Lista	728 - 729
Fren Parça listesi / Brake Parts List / Bremse Teil List / Elenco Delle Parti Freno / Liste Des Pièces de Frein / Lista de Piezasde Freno	730

TR ÜRÜN

Güç aktarımı alanında planet dişli ünitelerinin kullanılması kompaktlık, yapısal basitlik ve ürün güvenilirliği konusundaki taleplere modern bir yanıttır.

PL/PLB Planet dişli üniteleri, %62 çelik, yaklaşık %33 dökme demir ve daha düşük oranlarda alüminyum, bakır, kauçuk ve pirinçten yapılmıştır. Bu oranlar ürünün konfigürasyonuna bağlı olarak değişiklik göstermektedir.

PL/PLB planet dişli üniteleri, çıkış şaftından iletilmek üzere 500 Nm ile 620000 Nm arasında değişiklik gösteren farklı çıkış momenti değerlerine bağlı olarak 23 ana gruba ayrılmıştır.

Esas olarak. Planet dişli ünitelerinin modüler yapısı konik dişlilerin, sonsuz dişlilerin, hidrolik frenlerin ve çeşitli giriş millerinin planet ünitelere bağlanmasına olanak tanımakla birlikte hidrolik veya elektrik motorlu bağlantı için geniş yelpazedeki kaplin flanşlarının kullanılabilmesine de imkan tanımaktadır.

Planet dişli ünitelerinin modüler yapısının bir başka avantajı da çok çeşitli tahvil oranlarına olanak tanıyabilmek için farklı boylardaki çeşitli kademelerin seri olarak monte edilebilmesidir. Planet dişli ünitesinin tahvil oranları tek kademeli dişli ünitelerinde 3:1 ile 7:1, ve 5 kademede ise 10,000:1 oranına kadar değişiklik gösterebilmektedir.

Çıkış şaftları ve flanşlardaki geniş seçenek imkanı, sanayi makinelerinde veya sanayi tesislerinde redüktör ünitesinin montaj işlemini basitleştirmektedir.

Ürün standart boyasız olarak sevk edilmektedir. PGR çevre dostu boyaların kullanılmasını tavsiye etmektedir.

EN THE PRODUCT

The use of planetary gear units in the field of power transmission is the modern answer to the demand for compactness, constructive simplicity and product reliability.

PL/PLB planetary gear units are made of 62% steel, about 33% cast iron and a lower percentage of aluminium, copper, rubber and brass. These percentages vary depending on the product configurations.

PL/PLB planetary gear units are divided into 23 basic groups depending on the different torques that are to be transmitted to the output shaft, which can vary from 500 Nm to 620000 Nm.

In fact, the Planetary gear units product modular construction permits the coupling of bevel gears, worm gears, hydraulic brakes and a variety of input shafts to the planetary units, as well as providing for a wide choice of coupling flanges for hydraulic or electric motors.

Another advantage of the planetary gear units modular construction is that various stages, in different sizes, can be mounted in series to offer a wide range of reduction ratios. Planetary gear units reduction ratios range from 3:1 to 7:1 on single-stage drives up to 10,000:1 and more on 5 stage drives.

The wide selection of output shafts and flanges simplifies the reduction unit mounting operation on industrial machinery or plants.

Standard supply of the product does not include painting upon completion. PGR recommends using eco-friendly paints.

DE DAS PRODUKT

Im Vergleich zum Stirnradgetriebe, bei dem nur ein Zahn die Kräfte überträgt, wird das Moment am Zentralrad des Planetengetriebes auf drei Zahneingriffe aufgeteilt. Diese Konstruktion fuehrt zu kleinen Getriebeabmessungen, kompakter Bauweise und einem geringen Eingengewicht.

Die Planetengetriebe PL/PLB bestehen zu 62% aus Stahl, zu ca. 33% aus Gusseisen und aus geringeren Mengen Aluminium, Kupfer, Gummi und Messing. Diese prozentuellen Anteile variieren je nach Konfiguration des Produkts.

Die Planetengetriebe der Serie PL/PLB werden in 23 Grundgrößen mit Abtriebsdrehmomenten von 500 Nm bis zu 620000 Nm hergestellt.

Die modulare Konstruktion der Planetary Drives Produkte erlaubt die Kombination mit Kegelradgetrieben, Schneckengetrieben, hydraulischen Bremsen, unterschiedlichen Ausführungen von Antriebswellen und Motorflanschen für hydraulische und elektrische Motore.

Der Antrieb ist mit allen gaengigenHydraulikmotoren, aber auch mit freiem Wellenende oder Flansch für den Antrieb durch Elektomotore zurealisieren. Im Hydraulikbetrieb wird eine wartungsfreie und geräuscharme Federdruck-Lamellenbremse als Haltebremse eingesetzt.

Die verfuegbaren Formen hinsichtlich der Wellen und Flansche des Abtriebs erlauben den Einbau der Getriebe in diversen mobilen und stationaeren Applikationen.

Die Standardausführung des Produkts wird ohne Schlussanstrich geliefert. PGR empfiehlt den Gebrauch von umweltfreundlichen Lacken.

Uygulamalar

Planet dişli ünitelerinin uygulama yelpazesi artık çok çeşitli mobil makinelere, kimyasal tesislere, işleme aletlerine, mermer işleme makinelerine, nakliye ve kaldırma sistemlerine ve ek olarak gıda ve ekoloji sanayilerine genişlemiştir.

The Applications

The range of applications has now been extended to a wide variety of mobile machinery, chemical plants, machine tools, marble processing machinery, transportation and hoistingsystems, in addition to the food and ecology industries.

Die Einsatzbereiche

Immer öfter werden die Planetengetriebe auch in industriellen Anwendungen, wei Förder-und Hubsystemen, Krananlagen, im Schiffsbau, in der Offshore Technik, Stahlverarbeitung, Anlagen der Chemie, im Bereich alternativer Energien Umwelttechnik und der Nahrungsmitteltechnologie eingesetzt, um nur einige Schwerpunkte aufzuzeigen.

IT IL PRODOTTO

L' utilizzo del riduttore epicicloidale per la trasmissione di potenza è una risposta moderna alle esigenze di ingombri limitati, di semplicità costruttiva e di affidabilità per l'utilizzatore.

I riduttori epicicloidali PL/PLB sono costitu iti da acciaio per il 62% e ghisa per il 33% circa e in percentuale minore da alluminio rame, gomma e ottone. Tali percentuali variano a seconda delle configurazioni del prodotto.

La famiglia di riduttori epicicloidali PL/PLB è offerta al mercato in 23 grandezze di base, selezionate in funzione dei momenti torcenti che possono essere trasmessi all albero di uscita, che vanno da 500 Nm fino a 620000 Nm.

La modularità del prodotto Planetary Drives permette l'accoppiamento ai riduttori epicicloidali di coppie coniche, riduttori vite senza fine, freni idraulici, diversi tipi di alberi di ingresso, nonché i flange per l'accoppiamento diretto a motori idraulici o elettrici.

Un altro grande vantaggio derivante dalla modularità dei montaggio in serie di stadi di differenti grandezze, in modo da ottenere una vastissima gamma di rapporti di riduzione. La gamma di prodotti Planetray Drives offre rapporti di riduzione da 3:1 a 7:1 per i riduttori a singolo stadio fino a 10.000:1 e oltre per i riduttori a 5 stadi di riduzione.

Le diverse opzioni di albero e flangiatura in uscita semplificano l'installazione del riduttore su applicazioni mobili e impianti fissi industriali.

La fornitura standard del prodotto non prevede la verniciatura a finire. PGR raccomanda l'utilizzo di vernici a basso impatto ambientale.

FR LE PRODUIT

L'utilisation du réducteur planétaire pour la transmission de puissance est une solution moderne répondant aux exigences de dimensions réduites, de simplicité dans la construction et de fiabilité pour l'utilisateur.

Les réducteurs épicycloïdaux PL/PLB sont réalisés à 62% en acier et à 33% environ en fonte, avec un pourcentage minime d aluminium, de cuivre, de laiton et de caoutchouc. Ces pourcentages varient selon les différentes configurations du produit.

La famille de réducteurs planétaires PL/PLB se présente sur le marché avec 23 types de base, sélectionnés en fonction des couples transmissibles sur l'arbre de sortie qui vont de 500 Nm à 620000 Nm.

La construction modulaire du produit Planetary Drives permet d'accoupler les réducteurs planétaires avec des couples coniques, des vis sans fin, des freins hydrauliques ou bien avec divers types d'arbres d' entrée, ainsi qu'avec des brides pour la fixation directe sur moteurs hydrauliques ou électriques.

La possibilité de monter en série des étages de différents rapports permettant d'obtenir une très vaste gamme de rapports de réduction (de 3:1 à 7:1 pour les réducteurs monoétagés et jusqu' à 10.000:1 et plus pour les réducteurs à 5 étages de réduction) est un autre grand avantage résultant de la conception modulaire des réducteurs Planetray Drives.

La possibilité de disposer de plusieurs options en ce qui concerne l'arbre et le bridage côté sortie du réducteur simplifie le montage de ce dernier sur les machines ou sur les equipements industriels.

La fourniture standard du produit ne prévoit pas la peinture de finition. PGR recommande l'utilisation de peintures à faible impact environnemental.

ES EL PRODUCTO

La utilización del reductor epicicloidal para la trasmisión de potencia es una solución moderna ante las exigencias de espacios limitados, de sencillez constructiva y de confiabilidad para el utilizador.

Los reductores epicicloidales PL/PLB están constituidos por un 62% de acero, aproximadamente, un 33% de fundición y, en menor porcentaje, por aluminio, cobre, caucho y latón. Estos porcentajes varían según las configuraciones del producto.

La familia de reductores epicicloidales PL/PLB está compuesta por 23 grupos básicos, seleccionados en función de los momentos de torsión que se puenden transmitir al eje de salida, que van desde 500 Nm hasta 620000Nm.

La construcción modular del producto Planetary Drives permite acoplar a los reductores epicicloidales de pares cónicos, reductores de tornillo sin fin, frenos hidráulicos, distintos tipos de ejes de entrada, así como bridas para el acoplamiento directo a motores hidráulicos o eléctricos.

Otra gran ventaja ofrecida por la construcción modular de los reductores epicicloidales es la posibilidad del montaje en serie de etapas con diferente magnitud, para poder obtener una vasta gama de relaciones de reducción. La gama de productos Planetary Drives ofrece relaciones de reducción de 3:1 a 7:1 para los reductores con una sola etapa hasta 10.000:1 y más para los reductores con 5 etapas de reducción.
Las distintas opciones de eje y de embridado en la salida simplifican la instalación del reductor en aplicaciones móviles y en instalaciones industriales fijas.

El suministro estándar del producto no prevé la pintura de terminación. PGR recomienda usar pinturas de bajo impacto ambiental.

Le Applicazioni

Sempre più frequenti sono le applicazioni in impianti chimici, macchine utensili, macchine lavorazione marmo, sistemi di trasporto e sollevamento, impianti alimentari ed ecologici e macchine mobili in generale.

Les Applications

Les applications sont maintenant de plus en plus fréquentes dans les complexes chimiques, alim entaires et écologiques ainsi que sur les machines outils, les dispositifs de transport et de relevage et toutes les machines mobiles en général.

Las Aplicaciones

Son cada vez más frecuentes las aplicaciones en las instalaciones químicas, máquinas herramientas, máquinas para la elaboración del mármol, sistemas de transporte y elevación, instalaciones alimenticias y ecológicas y máquinas móviles en general.

Redüktör Tipi / Type of reduction unit / Type du reducteur / Forma costruttiva / Bauform getriebestufen / Forma constructiva

PL	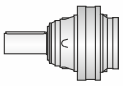	Eş eksenli dişli ünitesi / Inline stages gear unit / Koaxiale Ausfuehrung / Riduttore con stadi lineari Réducteur avec montage en ligne / Reductor con montaje en línea
PLB	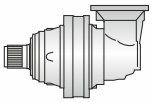	Konik dişli ünitesi / Bevel stages gear unit / Ausfuehrung mit Winkelstufe / Riduttore con stadi angolari / Réducteur avec montage angulaire / Reductor con montaje angular

Gövde Büyüklüğü / Gear unit size / Grösse / Grandezza riduttore / Taille / Tamaño

1000 - 1600 - 2500 - 5000 - 7000 - 10000 - 16000 - 18000 - 25000 - 30000 - 35000 - 50000 - 65000 - 90000 - 130000 - 170000 - 220000 - 250000 - 300000 - 380000 - 460000 - 550000 - 620000

Kademe / N° stages / N° stufen / N° stadı / N° etages / N° etapas

1 - 2 - 3 - 4 - 5

PL — 700 — 2 — PS — 42.1

Çıkış Tipi ve Şaftı/ Output type and shaft / Abtriebsbauteile and abtriebswelle / Versione e albero di uscita / Version et arbre de sortie / Versión y eje de salida

MS 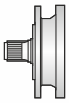	PS 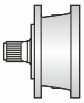	F 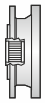	CPC 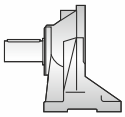
MC 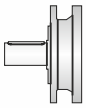	PC 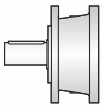	FS 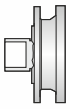	

Tahvil / Ratio / Verhältnis / Rapporto / Rapport / Relación

i

Teknik sayfalara bakınız / See technical sheets / Siehe Datenblätter / Vedi schede tecniche / Voir fiches techniques / Ver fichas técnicas

Sipariş örneği / Example for ordering / Beispiel Bestellbeschreibung / Esempio di ordinazione / Exemple de commande / Ejemplo orden de compra

PL 7002 PS 42.1 IEC90 B5 YZ FF	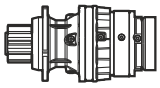
PL 7002 PS 42.1 EML 42 B5	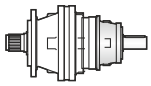
PL 7002 PS 42.1 H.2074.013.018 B5 FL FF	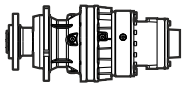
PL 7002 PS 42.1 PMRV63 20 90B14 C1	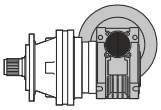

Elektrik Motor Bağlantıları / Electric Motor Couplings
Anbauvorrichtung Für Elektromotore / Predisposizioni Per Motori Elettrici /
Adaptations Pour Moteurs Electriques / Acoplamientos Para Motores Eléctricos

301-704

Çıkış aksesuarları / Output fittings /
Abtriebsbauteile / Accessori di uscita /
Accessoires de sortie / Accesorios de salida

FF	FL	BS
YZ	GA	KB

Giriş mili / Input shaft / Antriebswelle /
Albero entrata / Arbre d'entrée / Eje de entrada

88-90

EL C 28	EL C 42	EML 42	EML 1"3/8 Z6
EM 65	EM 1"3/8 Z6	EP 65	ET 90

Montaj Pozisyonu
Mounting position
Einbauposition
Posizione di montaggio
Position de montage
Posición de montaje

74

IEC90

EML 42

H.2074.013.018

PMRV063 | 20 | 90B14

B5 | C1 | YZ | FF

PMRV / PRV
Montaj Pozisyonu
Mounting position
Einbauposition
Posizione di montaggio
Position de montage
Posición de montaje

79-80

Sonsuz Dişlili Redüktörler / Worm reduction units /
Schneckengetriebe / Reducteurs quis sans fin /
Reductores de tarnillo sinfin / Reductores de rosca sem fin

PMRV / PRV
050 - 063 - 075 - 090
110 - 130 - 150

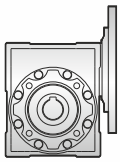

78-79

Hidrolik Motor Kaplinleri
Hidraulic Motor Couplings
Anbauvorrichtung Fuer Hydraulıkmotore
Predisposizioni Per Motori Idraulici
Adaptations Pour Moteurs Hydraulique
Acoplamiento Para Motores Hidráulicos

99-101

Elektrik Motor Flanşı
Electric motor coupling
Motorflansch Elektromotor
Predisposizione motore elettrico
Adaptation moteur électrique
Acoplamiento motor eléctrico

105

(i)
Tahvil / Ratio / Verhältnis /
Rapporto / Rapport / Relación

78-79

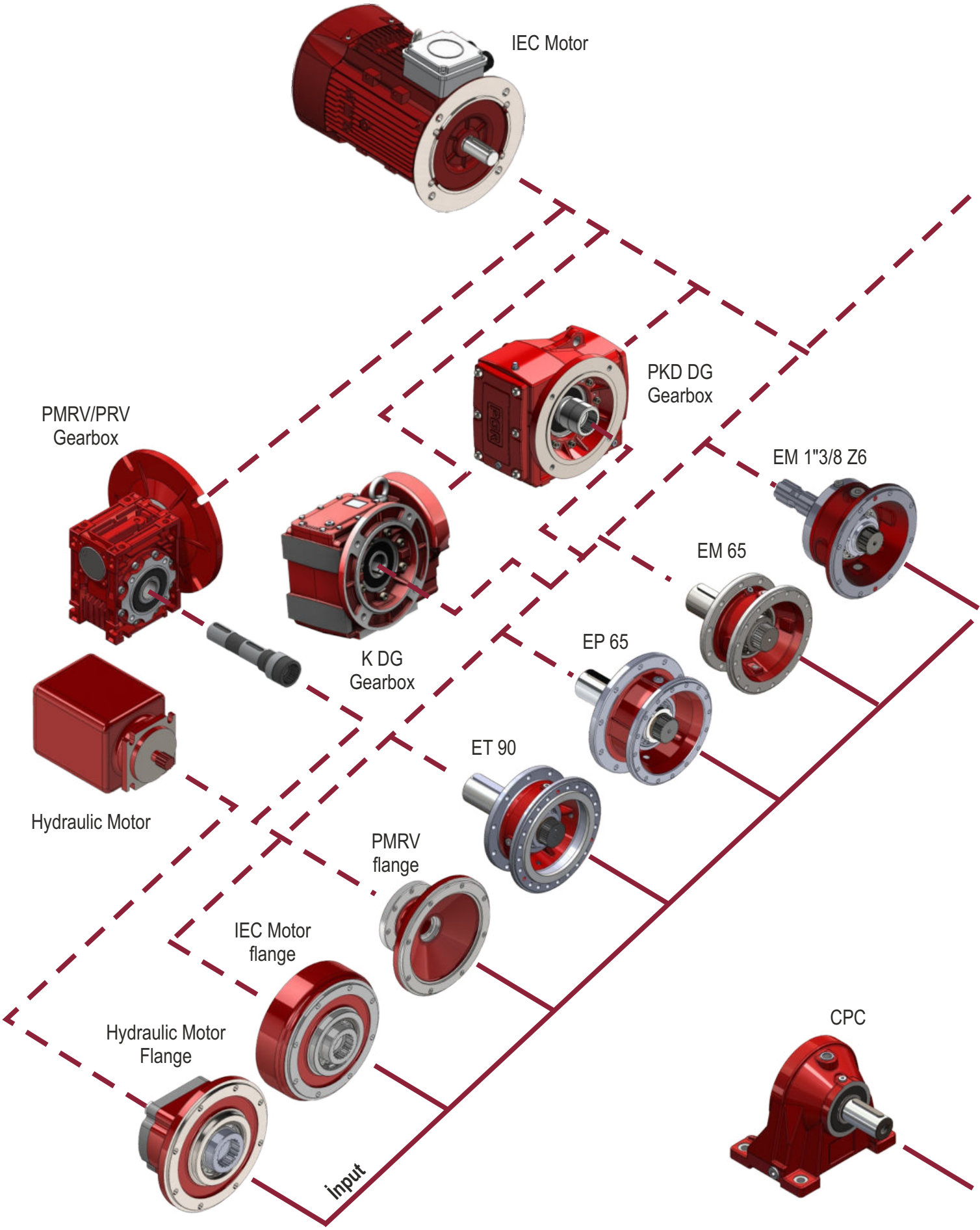
IEC Motor
PKD DG
Gearbox
PMRV/PRV
Gearbox
EM 1"3/8 Z6
EM 65
K DG
Gearbox
EP 65
ET 90
Hydraulic Motor
PMRV
flange
IEC Motor
flange
Hydraulic Motor
Flange
CPC
input

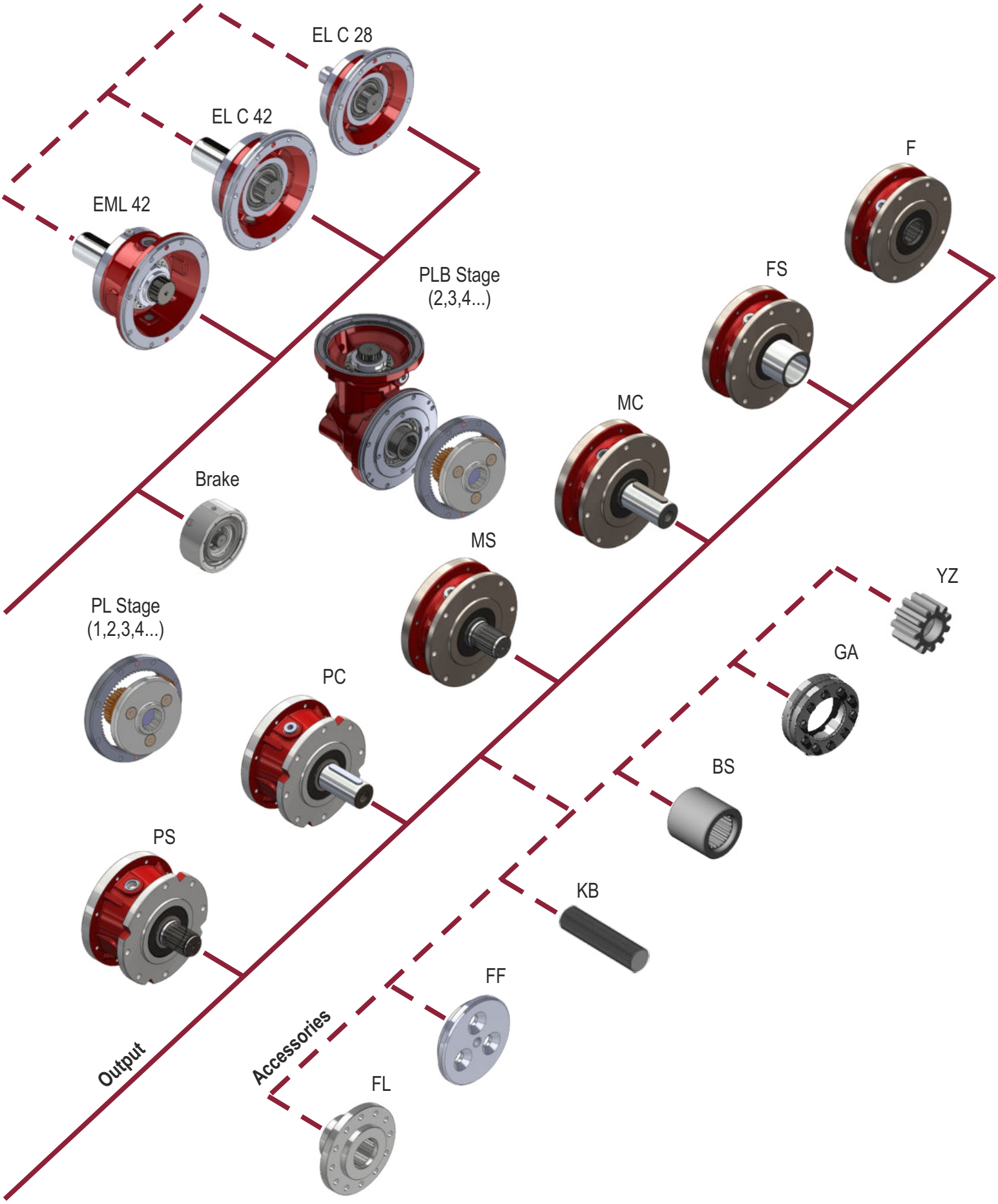
EL C 28
EL C 42
EML 42
PLB Stage
(2,3,4...)
F
FS
MC
Brake
MS
YZ
PL Stage
(1,2,3,4...)
GA
PC
BS
PS
KB
FF
Accessories
FL
Output

TR TEKNİK BİLGİLER

Ürünlerimizi doğru şekilde seçmek ve işletmeye almak için, kullanıcılar bu katalogta yer alan bilgileri eksiksiz olarak bilmeli ve doğru biçimde yorumlayabilmelidir.

Dolayısı ile aşağıdaki bazı belirli parametrelerin tanımlanması önemlidir.

Tahvil Oranı
i_{ges}

Bu oran, giriş devri (n_1) ile çıkış devri (n_2) arasındaki orandır.

İlgili teknik sayfada gösterilen her planet dişli üniteleri için sunulmuştur.

Maksimum Giriş Devri
n_{1max} [d/d]

Aralıklı çalışma koşullarında, her bir planet dişli ünitesi için izin verilen maksimum devirdir. Sürekli çalışma veya daha yüksek hızlarda çalışma konularında daha ayrıntılı bilgi almak için lütfen PGR Teknik Departmanı ile irtibata geçiniz. Her bir planet dişli ünitesi tipi için maksimum devir değerleri teknik sayfalarda gösterilmiştir.

Verimlilik

Planet aktarımlarda verimlilik oranı genellikle yüksektir. Ortalama değerler, her bir tahvil kademesi için 0.97 ile 0.98 arasında değişmektedir. Bu yaklaşık değer yüksek devir koşulları altında veya konik dişli kullanılan uygulamalarda düşer.

Sürekli Moment
Mc [kNm]

Sürekli moment, uluslararası standart ISO 6336;'ya göre, dişliler üzerindeki maksimum stres oranıdır.

Bu konvansiyonel değer, teorik olarak sınırsız kabul edilen dişli kullanım süresine denk gelir ve hem burulma gerilimini hem de dişlilerin yüzey mukavemetlerini hesaba katar (Hertz basıncı).

EN TECHNICAL INFORMATION

To properly select and implement our products, users must have complete knowledge of and correctly interpret the information provided in this catalogue.

Thus, it's important to define some distinctive parameters, such as:

Reduction Ratio
i_{ges}

This is the ratio between input speed (n_1) and output speed (n_2).

It is provided for each drive shown on the relative technical sheet.

Maximum Input Speed
n_{1max} [min^{-1}]

This is the maximum allowable speed for each size of drive under intermittent work conditions. For more information about continuous duty or higher speeds, please contact the PGR Technical Department.
Maximum speed values for each type of planetary drive are illustrated on the single technical sheets.

Efficiency

Efficiency is usually high in planetary transmissions average values range between 0.97 and 0.98 for each reduction stage. This approximate value decreases under high-speed conditions or in applications with bevel gears.

Continuous Torque
Mc [kNm]

Continuous torque is the maximum value of the stress on the gears according to international standard ISO 6336.

This conventional value corresponds to the unlimited theoretical duration of the gears, taking into account both the bending stress and the surface strength of the tooth (Hertz pressure).

DE TECHNISCHE EIGENSCHAFTEN

Die Kenntnis der Anforderung, sowie die korrekte Umsetzung der im Katalog gelieferten Daten sind Voraussetzung für die gezielte Auswahl und somit den erfolgreichen Einsatz des entsprechenden Produktes.

Es ist deshalb wichtig, die folgenden Bestimmungsfaktoren festzulegen:

Übersetzung
i_{ges}

Es handelt sich um den Quotienten aus Antriebsdrehzahl (n_1) und Abtriebsdrehzahl (n_2).

Sie wird für jedes Getriebemodell im jeweiligen technischen Datenblatt angegeben.

Maximal Zulässige Antriebsdrehzahl
n_{1max} [min^{-1}]

Ist die zulässige Höchstgeschwindigkeit für jedes Planetengetriebe im intermittierenden Betrieb. Im Dauerbetrieb mit Antriebsdrehzahlen, die angegebenen Werte überschreiten, halten Sie bitte Rücksprache mit dem technische Abteilung von PGR.
Die werte der zulässigen Eingangsdrehzahl sind für jedes Getriebemodell im technischen Datenblatt angegeben.

Wirkungsrad

Der Wirkungsgrad des Planetengetriebes liegt pro Planetenstufe bei 97% - 98% = 94%. Dieser Anhaltswert nimmt beim Betrieb mit hohen Geschwindigkeiten sowie bei Getrieben in der Winkelausführung ab.

Dauerdrehmoment
Mc [kNm]

Dieser allgemein festgelegte Wert entspricht einer theoretisch unbegrenzten Lebensdauer der Zahnräder, wobei sowohl die Biegespannung als auch die zulässige Hertzsche Pressung auf die Zahnflankenoberfläche berücksichtigt werden. Es handelt sich um das Limit der Beanspruchung an die Verzahnung gemaess der Norm ISO 6336.

IT CARATTERISTICHE TECNICHE

La conoscenza e l'esatta interpretazione dei dati riportati sul presente catalogo sono condizione indispensabile per la scelta e l'impiego corretto dei prodotti presentati.

È importante quindi definire alcuni parametri caratteristici:

Rapporto Di Trasmissione
i_{ges}

È il valore effettivo del rapporto tra la velocità di entrata (n_1) e la velocità di uscita (n_2).

Viene indicato per ogni tipo di riduttore nella relativa scheda tecnica.

Velocità Massima In Entrata
n_{1max} [min^{-1}]

Rappresenta il valore massimo accettabile per ogni grandezza di riduttore, in condizioni di funzionamento intermittente. Per applicazioni in servizio continuo o per velocità superiori a quelle indicate, il PGR è a disposizione per ulteriori chiarimenti.

I valori della velocità massima in entrata per ogni tipo di riduttore sono illustrati nelle singole schede tecniche.

Rendimento

Nella trasmissione epicicloidale, il rendimento è generalmente elevato, mediamente 0.97 - 0.98 per ogni stadio di riduzione. Questo dato indicativo si riduce nel caso di funzionamenti a velocità elevate o nel caso di riduttori in versione angolare.

Coppia Continua
Mc [kNm]

È quella coppia per cui il valore delle sollecitazioni sugli ingranaggi è pari al valore limite secondo le norme internazionali ISO 6336.

Questo valore convenzionale corrisponde ad una durata di vita teorica illimitata degli ingranaggi, tenendo conto sia della sollecitazione a flessione che della esistenza superficiale del dente (pressione di Hertz).

FR CARACTERISTIQUES TECHNIQUES

La connaissance et la bonne interprétation des données contenues dans le présent catalogue sont deux conditions indispensables qui permettent de choisir et d'utiliser correctement les produits présentés.

Il est par conséquent important de définir un certains nombre de paramètres spécifiques:

Rapport De Transmission
i_{ges}

Il s'agit de la valeur effective du rapport entre la vitesse d'entrée (n_1)et la vitesse de sortie (n_2).

Elle est indiquée sur la fiche technique de chaque type de réducteurs.

Vitesse Maximale D'entree
n_{1max} [min^{-1}]

Ce paramètre représente la vitesse maximale admise pour chaque taille de réducteur, en condition de fonctionnement intermittent. Pour des applications en service continu ou bien pour des vitesses supérieures à celles indiquées, le PGR est à votre disposition pour toute information supplémentaire.
Les valeurs de vitesse maximale en entrée sont indiquées sur la fiche technique de chaque type de réducteur.

Rendement

Sur les transmissions épicycloïdales, le rendement est généralement élevé, 0.97-0.98 en moyenne pour chaque étage de réduction. Cette donnée indicative peut être inférieure dans le cas d'un fonctionnement à haute vitesse ou dans le cas de réducteurs en version angulaire.

Couple Continu
Mc [kNm]

Il s'agit du couple auquel la valeur des sollicitations sur les engrenages est égale à la valeur limite selon les normes internationales ISO 6336.

Cette valeur conventionnelle correspond à une durée de vie théorique illimitée des engrenages, en tenant compte aussi bien de la contrainte de flexion que de la résistance de la surface de la dent (pression de Hertz).

ES CARACTERÍSTICAS TÉCNICAS

El conocimiento y la correcta interpretación de los datos indicados en este catálogo son una condición indispensable para efectuar la mejor elección y utilización de los productos presentados.

Por tanto es importante definir algunos parámetros característicos:

Relación De Transmisión
i_{ges}

Es el valor efectivo de la relación entre la velocidad de entrada (n_1) y la velocidad de salida (n_2).

El valor para cada tipo de reductor se indica en la respectiva ficha técnica.

Velocidad Máxima De Entrada
n_{1max} [min^{-1}]

Representa el valor máximo aceptable para cada dimensión de reductor, con funcionamiento intermitente. Para aplicaciones con servicio continuo o para velocidades superiores a aquellas indicadas, se aconseja ponerse en contacto con el Servicio Técnico PGR.
Los valores de la velocidad máxima de entrada para cada tipo de reductor se indican en las respectivas fichas técnicas.

Rendimiento

En la transmisión epicicloidal, el rendimiento es generalmente elevado, entre 0.97-0.98 para cada etapa de reducción. Este dato indicativo se reduce para el funcionamiento con elevadas velocidades o para applicaciones con reductores cónicos.

Momento De Torsión Continuo
Mc [kNm]

Es el valor del momento para el cual el valor de las solicitaciones en los engranajes es igual al valor límite según las normas internacionales ISO 6336.

Este valor convencional corresponde a un tiempo de vida teórico ilimitado de los engranajes, teniendo en cuenta la solicitación bajo flexión y la resistencia superficial del diente (presión de Hertz).

TR TEKNİK BİLGİLER

Bir planet dişli ünitesi seçerken, bu değer Diyagram 1'de gösterilen SÜRE SABİTİ nxh ile ilişkili olarak düşünülmelidir.
Burada;
n = çıkış devri (d/d)
h = çalışma süresi (saat) ifade etmektedir.

Anlamayı kolaylaştırmak için, ürünlerin teknik sayfalarında sabit bir $n_2$xh değerine denk gelen Mc değerleri gösterilmiştir.

Maksimum Moment
M_{max} [kNm]

Bu moment, planet dişli ünitesinin iç bileşenleri ve yapısı hasar görmeden, kısa bir süre içerisinde aktarabileceği maksimum çıkış momentini ifade etmektedir. Bu değer, çalışma sırasında veya başlatma sırasında ulaşılan pik değerler olarak kabul edilmelidir ve asla sürekli çalışma momenti olarak kabul edilmemelidir. Aynı zamanda, M_{max} çok fazla sayıda başlatmaya veya ters çevirmeye sahip uygulamalar için dikkatli bir biçimde değerlendirilmelidir.

Her bir planet dişli ünitesi tipi için M_{max} değerleri ürün teknik sayfalarında gösterilmektedir.

Çalışma Sıcaklığı

Planet dişli ünitelerinin çalışırken yağ sıcaklığı -20°C ile +90°C arasında olmalıdır. Bu aralığın dışında kalan sıcaklıklar ancak özel yağlar ve contalar kullanıldığı takdirde izin verilebilir. Bu konuda daha ayrıntılı bilgi almak için lütfen PGR Teknik Departmanı ile iletişime geçiniz.

Termik Güç
Pt [kW]

Termik güç, kesintisiz çalışma sırasında, normal türbülans yağlaması ile yağ sıcaklığı 90°C 'yi aşmayacak şekilde aktarabileceği maksimum gücü ifade etmektedir.

Ürün teknik sayfasında gösterilen Pt değerleri aşağıdaki çalışma koşullarındaki maksimum değerleri ifade etmektedir:
• Kesintisiz çalışma
• Hız n_1 = 1500 (d/d)

• Yağ ISO VG 150
• Yatay montaj pozisyonu
• Oda sıcaklığı 20°C.

EN TECHNICAL INFORMATION

For the purpose of selecting a drive, this value must be considered in relation to the DURATION CONSTANT nxh, as shown in Curve 1 where:
n = output speed (min^{-1})
h = working time (hours)

To make consultation easier, the Mc values corresponding to a fixed $n_2$xh value are shown on the product technical sheets.

Maximum Torque
M_{max} [kNm]

This is the maximum output torque that the drive can transmit over a brief time interval without damaging its internal components and structure. This value must be considered as the maximum output torque o wing to working or start-up peaks and never as the continuous working torque.
M_{max} must also be carefully evaluated in those applications with a high number or start-ups or reversals.

The M_{max} value is shown on the single product technical cards.

Working Temperature

The working oil temperature of the drives should range between -20°C and +90°C. Temperatures falling outside this range might be tolerated only if special lubricants and gaskets are used. For further information, please contact the PGR Technical Department.

Thermal Power
Pt [kW]

The thermal power is the maximum power the drive can transmit under continuous duty with normal turbulence lubrication and without exceeding an oil temperature of 90˚C.
The Pt values shown on the single product technical sheet indicate the maximum values under the following duty conditions:
• Continuous duty
• Speed n_1 = 1500 min^{-1}

• Oil ISO VG 150
• Horizontal mounting position.
• Room temperature 20°C.

DE TECHNISCHE EIGENSCHAFTEN

Um eine korrekte Auswahl des Getriebes zu treffen, muß dieser Wert in Bezug zur LEBENSDAUER-KONSTANTE nxh gesetzt werden (Diagramm 1).
n = Drehzahl an der Ausgangswelle (min^{-1})
h = Betriebsdauer (Stunden)

Zum einfacheren Nachschlagen sind in dem Datenblatt die einem vorgegebenen Wert von $n_2$xh entsprechenden Mc-Werte angegeben.

Maximales Drehmoment
M_{max} [kNm]

Es handelt sich um den maximal zulässigen Wert des Drehmoments, den das Getriebe kurzzeitig übertragen kann, ohne daß Schäden auftreten. Dieser Wert ist als maximales Drehmoment bei kurzzeitigen Spitzenbelastungen zu betrachten und niemals als Drehmoment bei Dauerbetrieb; er muß außerdem jeweils entsprechend dem Lastkollektiv gewertet werden.

Der Wert M_{max} wird in den technischen Datenblaettern des entsprechenden Getriebetyps ausgewiesen.

Betriebs Temperatur

Die Getriebe können bei einer Umgebungstemperatur zwischen -20°C und +90°C betrieben werden. Ein betrieb bei Temperaturen außerhalb dieses Bereiches ist möglich, vorausgesetzt daß besondere Maßnahmen in Bezug auf verwendete Schmierstoffe und Dichtungen beachtet werden. Diese Maßnahmen können im Einzelfall in Abstimmung mit dem technische Abteilung von PGR entschieden werden.

Thermische Leistung
Pt [kW]

Es handelt sich um die maximale Leistung, die das Getriebe bei Dauerbetrieb und normaler Schmierweise übertragen kann, ohne daß die Öltemperatur von 90°C überschritten wird. Die in den jeweiligen techischen Datenblättern aufgeführten Pt- Werten sind maximalwerte unter den folgenden Betriebsbedingungen:

• Dauerbetrieb ohne Unterbrechungen
• Drehzahl n_1 = 1500 min^{-1}

• ÖI ISO VG 150
• Waagerechte einbaulage
• Umgebungstemperatur 20°C.

IT CARATTERISTICHE TECNICHE

Ai fini della scelta del riduttore questo valore va posto in riferimento alla COSTANTE DI DURATA nxh espressa nel Diagramma 1 dove:

n = Velocità in uscita (min^{-1})
h = Durata di funzionamento (ore).

Per semplicità di consultazione, nella scheda tecnica di prodotto sono riportati i valori di Mc corrispondenti ad un valore n2xh prefissato.

Coppia Massima
Mmax [kNm]

È il valore massimo di coppia che il riduttore può trasmettere per breve tempo senza che si verifichino danneggiamenti ai suoi componenti interni ed alla sua struttura.
Tale valore deve essere considerato come una coppia massima dovuta a picchi o spunti di avviamento e mai come coppia di lavoro; il valore Mmax deve inoltre essere opportunamente valutato in quegli azionamenti che comportano un elevato numero di avviamenti o inversioni.

Il valore Mmax è indicato nelle schede tecniche di prodotto.

Temperatura Di Funzionamento

Le temperature dell'olio a cui i riduttori possono funzionare sono quelle comprese tra -20°C e +90°C. Temperature al di fuori di questa fascia possono essere accettate se si prevedono particolari accorgimenti relativi ai tipi di lubrificante e di guarnizioni utilizzati. Tali accorgimenti possono essere decisi caso per caso, d'accordo con il Servizio Tecnico PGR.

Potenza Termica
Pt [kW]

È la potenza massima trasmissibile dal riduttore in funzionamento continuo con lubrificazione normale a sbattimento, senza che l'olio superi la temperatura di 90°C.
I valori di Pt riportati nelle singole schede tecniche di prodotto sono valori massimi espressi alle seguenti condizioni di impiego:
• Servizio continuo
• Velocità n_1 =1500 min^{-1}

• Olio ISO VG 150
• Posizione di montaggio orizzontale
• Temperatura ambiente 20°C.

FR CARACTERISTIQUES TECHNIQUES

Pour le choix du réducteur, cette valeur doit être mise en rapport avec CONSTANTE DE DURÉE nxh indiquée dans le Diagramme 1 où:

n = vitesse de sortie (min^{-1})
h = durée de fonctionnement (heures)

Pour simplifier la consultation, les fiches techniques des produits indiquent les valeurs de Mc correspondant à une valeur n2xh prédéterminée.

Couple Maximal
Mmax [kNm]

Il s'agit de la valeur maximum de couple que len réducteur peut transmettre pendant une courte durée, sans que ni ses composants internes ni sa structure ne subissent de dommages. Cette valeur doit être considérée comme un couple maximum lors de pics ou lors de mises en marche et ne doit jamais être envisagée comme couple de fonctionnement. La valeur Mmax doit en outre être bien évaluée sur les actionnements qui prévoient un grand nombre de mises en marche ou d'inversions.

La valeur Mmax est indiquée sur chaque fiche technique de produit.

Temperature De Fonctionnement

Les températures de l'huile auxquelles les réducteurs peuvent fonctionner sont celles comprises entre -20°C et +90°C. Des températures hors de cette plage sont acceptables à condition de prendre des précautions spécifiques concernant le type de lubrifiant et les joints utilisés. Ces précautions sont à établir au cas par cas, en accord avec le Service Technico PGR.

Puissance Thermique
Pt [kW]

Il s'agit de la puissance maximale transmissible par le réducteur en fonctionnement continu en conditions de lubrification standard par barbotage, sans que l'huile ne dépasse la température de 90°C.
Les valeurs de Pt indiquées sur chaque fiche technique sont des valeurs maximales établies dans les conditions d'utilisation suivantes:
• Service continu
• Vitesse n_1=1500 min^{-1}

• Huile ISO VG 150
• Position de montage horizontale
• Température ambiante 20°C

ES CARACTERÍSTICAS TÉCNICAS

Para la elección del reductor, este valor representa la CONSTANTE DEL TIEMPO DE VIDA nxh como se muestra en el Diagrama 1 donde:

n = Velocidad en la salida (min^{-1})
h = Duración de funcionamiento (horas)

Para simplificar la consulta, en la ficha técnica del producto se indican los valores de Mc correspondientes a un valor n2xh prefijado.

Máximo Momento De Torsión
Mmax [kNm]

Es el máximo valor del momento de torsión que el reductor puede transmitir durante un tiempo breve sin que se produzcan daños en sus componentes internos y estructura. Dicho valor se tiene que considerar como el máximo momento de torsión debido al trabajo o a picos de arranque y jamás como un momento continuo de trabajo. Además, el valor Mmax se tendrá que evaluar en aquellos accionamientos que requieran un gran número de arranques o inversiones.

El valor Mmax se indica en las fichas técnicas del producto.

Temperatura De Funcionamiento

Las temperaturas del aceite para las cuales los reductores pueden funcionar tienen que estar comprendidas entre -20°C y +90°C. Se pueden aceptar temperaturas fuera de esta faja si se prevén particulares precauciones respecto a los tipos de lubricante y de guarniciones utilizadas. Dishas precauciones se pueden establecer según el caso, poniéndose de acuerdo con el Servicio Técnico PGR.

Potencia Térmica
Pt [kW]

Es la potencia máxima que puede transmitir el reductor durante el funcionamiento continuo con lubricación normal por circulación y salpicadura y sin que el aceite supere los 90°C. Los valores de Pt indicados en cada una de las fichas técnicas del producto son los máximos valores para las siguientes condiciones de utilización:
• Servicio continuo
• Velocidad n_1= 1500 min^{-1}

• Aceite ISO VG 150
• Posición de montaje horizontal
• Temperatura ambiante 20°C

TR TEKNİK BİLGİLER

Eğer gereken güç, planet dişli ünitesinin teknik sayfasında belirtilen değerlerin üzerine çıkıyorsa ilave yağ soğutma sistemi takılmalıdır.

Ayak montajlı Planet dişli üniteleri için (PL1000 ile PL16000 arasındaki seriler) Pt değeri % 15 daha arttırılabilir.

Eğer çalışma özellikleri değişirse aşağıdaki Tablo 1'de gösterildiği üzere, Pt değerlerini düzeltmek için bir fk düzeltme faktörü kullanabilirsiniz.

EN TECHNICAL INFORMATION

If the required power exceeds the values indicated on the drive technical sheet, a lubricant cooling system must be installed.

For foot-mounted drives (from the PL1000 to the PL16000 series), the Pt value can be increased by 15%.

If the duty characteristics differ, you can apply a corrective factor fk to the Pt values as indicated in Table 1 below:

DE TECHNISCHE EIGENSCHAFTEN

Sollte die geforderte Leistung die im technischen Datenblatt des Getriebes aufgeführten Werte übersteigen, wird ein Schmiermittel-Kühlsystem erforderlich.

Der Pt-Wert der Getriebe in Fussaussfuehrung (von Größe PL1000 bis PL16000) kann um 15% erhöht werden.

Weichen die Einsatzbedingungen von den Normbedingungen ab, können die Pt Werte durch den Korrekturfaktor fk korrigiert werden (vgl. nachstehend aufgeführte Tabelle 1).

$$Pt_1 = Pt \times fk$$

Termal güç düzeltme faktörü (fk) Themal power adjustment factor (fk) Anpassungsfaktor Wärmekapazität (fk)					
Çalışma süresi % Work time % Betriebszeit in %	Oda sıcaklığı / Room temperature / Raumtemperatur In				
	10°C	20°C	30°C	40°C	50°C
100	1.1	1.0	0.8	0.7	0.6
80	1.2	1.1	1.0	0.8	0.7
60	1.4	1.2	1.1	1.0	0.8
40	1.6	1.4	1.2	1.1	1.0
20	1.8	1.6	1.4	1.2	1.1

Tablo 1/ Table 1 / Tabelle 1

NOT: Pt, planet dişli ünitesi tarafından aktarılan gerçek gücü ifade etmektedir. Planet dişli ünitesinin üzerine monte edilen motorun, çeşitli sebeplerle daha yüksek olabilecek olan güç değeri ile karıştırılmamalıdır.

Daha fazla ayrıntı için lütfen PGR Teknik Departmanı ile iletişime geçiniz.

NOTE. Pt refers to the power actually transmitted by the drive. It should not be confused with the power of the motor mounted on the drive which, for various reasons, might be higher.

For further details please contact the PGR Technical Department.

ANMERKUNG: Es wird darauf hingewiesen, daß sich der Pt-Wert auf die tatsächlich vom Getriebe übertragene Leistung bezieht; sie darf nicht mit der Leistung des eingebauten Motors verwechselt werden, die höher sein könnte.
Für weitere Rückfragen wenden Sie sich bitte an den Kundenservice von PGR.

Servis Faktörü
fs

Servis faktörü fs, planet dişli ünitesinin seçilmesi için formüle girilen katsayıdır.

Bu faktör uygulamanın yük koşullarını da hesaba katar. Tablo 2 'de tanımlanmıştır.

Service Factor
fs

Service factor fs is a multiplication coefficient introduced into the formula for selecting the drive.

This factor takes into account the application load conditions. It is defined in Table 2.

Betriebsfaktor
fs

Es handelt sich um einen Multiplikationskoeffizienten, der in die Formel eingesetzt wird.

Damit soll den nach Einsatzform unterschiedlichen Belastungen Rechnung getragen werden; er wird in Tabelle 2 aufgeführt.

IT CARATTERISTICHE TECNICHE

Qualora a potenza richiesta ecceda i valori indicati nella scheda tecnica del riduttore sarà necessario prevedere un sistema di raffeddamento del lubrificante.

Per i riduttori con piedi (dalla grandezza PL1000 alla grandezza PL16000) il valore di Pt può essere incrementato del 15%.

Nel caso le caratteristiche di impiego siano diverse, si può applicare ai valori di Pt un fattore correttivo fk, come indica la Tabella 1, di seguito riportata:

FR CARACTERISTIQUES TECHNIQUES

Si la puissance requise dépasse les valeurs indiquées sur la fiche technique du réducteur, il est nécessaire de prévoir l'installation d'un système de refroidissement du lubrifiant.

Pour les réducteurs à pattes, (de la grandeur PL1000 à la grandeur PL16000) la valeur Pt peut être majorée de 15%.

Dans le cas où les caractéristiques d'utilisation seraient différentes, il est possible d'appliquer un facteur correctif fk, comme indique dans le Tableau 1 ci-dessous:

ES CARACTERÍSTICAS TÉCNICAS

Si la potencia requerida excede los valores indicados en la ficha técnica del reductor será necesario prever un sistema de enfriamento del lubricante.

Para los reductores con pie (desde la serie PL1000 hasta PL16000) el valor de Pt se puede incrementar el 15%.

Si las características de empleo son distintas, a los valores de Pt se les puede aplicar un factor de corrección fk, com o se indica en la siguiente Tabla 1:

$$Pt_1 = Pt \times fk$$

Fattore di adeguamento della capacità termica (fk) Facteur d'adaptation de la capacite thermique (fk) Factor de adaptación de la capacidad térmica (fk)					
Tempo % di funzionamento Temps % de fonctionnement Tempo % de funcionamento	Temperatura ambiente / Température Ambiante / Temperatura ambiente				
	10°C	20°C	30°C	40°C	50°C
100	1.1	1.0	0.8	0.7	0.6
80	1.2	1.1	1.0	0.8	0.7
60	1.4	1.2	1.1	1.0	0.8
40	1.6	1.4	1.2	1.1	1.0
20	1.8	1.6	1.4	1.2	1.1

Tabella 1 / Tableau 1 / Tabla 1

N.B. Si noti che la Pt è riferita alla potenza effettivamente trasmessa dal riduttore, da non confondere quindi con la potenza del motore su di esso installato, che per vari motivi potrebbe essere superiore.

Per ulteriori dettagli si prega di contattare il Servizio Tecnico PGR.

N.B. Pt se réfèe à la puissance effectivement, transmise par le réducteur; il est important de ne pas confondre cette valeur avec la puissance du moteur sur lequel le réducteur est installé, puissance qui, pour différentes raisons, peut être supérieure.
Pour plus de détails, s'adresser au Service Technico PGR.

Nota: Tener en cuenta que la Pt se refiere a la potencia efectivamente transmitida por el reductor, por tanto no hay que confundirse con la potencia del motor instalado sobre el mismo, que por distintos motivos podría ser superior.

Para más detalles se aconseja ponerse en contacto con el Servicio Técnico PGR.

Fattore Di Servizio
fs

È un coefficiente di moltiplicazione che viene inserito nella formula per la scelta del riduttore.

Serve per tener conto delle condizioni di carico dell'applicazione, ed è definito dalla Tabella 2.

Facteur De Service
fs

Il s'agit d'un coefficient de multiplication qui est introduit dans la formule servant à choisir le réducteur.

Il permet de tenir compte des conditions de charge de l'application et est défini dans le Tableau 2.

Factor De Servicio
fs

Es un coeficiente de multiplicación que se introduce en la fórmula para la elección del reductor.

Sirve para tener en cuenta las condiciones de carga de la aplicación y está definido en la Tabla 2.

TR TEKNİK BİLGİLER

GİRİŞ VE ÇIKIŞ RADYAL YÜKLERİ

Fr; Fa [N]
Fr = Radyal yük
Fa= Eksenel yük

Çıkış şaftlarının taşıyabileceği yük değerleri, her bir planet dişli ünitesi için verilen yük eğrilerinde gösterilmiştir; giriş şaftları ile ilgili olan yük değerleri ise sayfa 88-90 arasında gösterilmiştir.
Maksimum radyal ve eksenel yükler aynı anda meydana gelmemelidir.
İzin verilen yük değerleri Fr ve Fa, ISO 281 standardına uygun olarak, aşağıdaki rulman dayanma süreleri göz önüne alınmalıdır.

nxh = $5x10^6$ giriş şaftları için
nxh = 10^5 çıkış şaftları için

Delik milli-kayıcılı planet dişli üniteleri (F) genellikle radyal yüke sahip olmayan momentlerin aktarımında uygulanmaktadır. Bu durumda Fr ve Fa maksimum değerleri gösterilmez.
Daha ayrıntılı bilgi almak için lütfen PGR Teknik Departmanı ile iletişime geçiniz.

EN TECHNICAL INFORMATION

OUTPUT AND INPUT SHAFT LOADS

Fr; Fa [N]
Fr = Radial load
Fa= Axial load

The load values that output shafts can bear are indicated on the load curves shown for each drive size; the load values relevant to input shafts are shown on page 88-90.

Maximum radial and axial loads must not occur simultaneously.
The values of the tolerated loads Fr, Fa refer to a bearing duration, according to standard ISO 281, corresponding to:

n x h = $5x10^6$ for input shafts
n x h = 10^5 for output shafts

F gear units are usually applied in the transmission of a torque without radial loads. In this case, maximum values Fr and Fa are not shown.
For further information, please contact the PGR Technical Department.

DE TECHNISCHE EIGENSCHAFTEN

BELASTUNG DER ABTRIEBSWELLE UND ANTRIEBSWELLE

Fr; Fa [N]
Fr = Radiallast
Fa= Axiallast

Die Belastbarkeit der Abtriebswelle ergibt sich aus den jeder Getriebegröße zugeordneten Diagrammen. Dagegen sind die Werte der Antriebswelle auf der S. 88-90 ersichtlich.

Die zulässigen Maximalwerte der Radial und Axialbelastungen dürfen nicht gleichzeitig auftreten. Der Wert der zulässigen Belastung durch Fr und Fa bezieht sich auf eine Betriebsdauer nach ISO 281, das entspricht:

n x h = $5x10^6$ fuer antriebswelle
n x h = 10^5 fuer abtriebswelle

Die Getriebe in Ausführung F werden in der Regel für die Übertragung von Drehmomenten ohne Radialbelastung eingesetzt. Deshalb werden Fr und Fa nicht angegeben. Für weitere Rückfragen wenden sie sich bitte an den Kundenservice von PGR.

PGR, ürününü sürekli olarak geliştirdiği için gerekli görülen teknik verilerde ve ölçülerde, önceden kimseye haber vermeden değişiklik yapabilir.

Because PGR is continuously improving its product, it will make the technical and dimensional changes deemed necessary, without notifying the market in advance.

Im Rahmen der ständigen Weiterentwicklung und Verbesserung der Produkte behält sich PGR das Recht vor, erforderliche technische Änderungen ohne ausdrückliche vorankündigung durchzufuehren.

PLANET DİŞLİ ÜNİTESİ SEÇİMİ

Mekanik bir aktarım sisteminde yer alan bir planet dişli ünitesi, ana makine ile tahrik edilecek donanımlar arasında konumlanmış bir ekipmandır. Çalışma sırasında maruz kaldığı gerilimler kesin bir şekilde ana makine ile tahrik edilen ekipmanların özellikleri ile ilgilidir (güç emilimi ve çalışma döngüsü).

En iyi planet dişli ünitesinin seçilebilmesi için bütün aktarım sistemi hakkında bilgi sahibi olunması gerekmektedir. Aşağıdakilerin bilinmesi gereklidir:

TAHRİK EDİLEN EKİPMAN
a) Çalışma Şartları
b) Dönüş hızı
c) Güç ve/veya moment ihtiyacı
d) Çalışma döngüsü

ANA MAKİNE
e) Ana makinenin tipi ve özellikleri
f) İletilen güç ve/veya moment
g) Çalışma devri

DRIVE SELECTION

In a mechanical transmission system, a drive is a device positioned between the prime mover and the driven equipment. The stress it is subjected to during operation is strictly related to the characteristics of the prime mover and the driven equipment (power absorption and work cycle).

Knowledge of the entire transmission system is mandatory to choose the best drive. It is necessary to know the following:

DRIVEN EQUIPMENT
a) Type of operation
b) Rotation speed
c) Power and/or torque absorption
d) Working cycle

PRIME MOVER
e) Type and characteristics of the prime mover
f) Delivered power and/or torque
g) Operating speed

GETRIEBEAUSWAHL

In einem mechanischen System ist das Getriebe eine Einheit zwischen Motor und anzutreibender Maschine. Die Belastungen die auf dem Getriebe während des Betriebes wirken, sind eine Funktion sowohl der Motor-als auch der Maschinenkennlinie (Leistungsaufnahme und Lastkollektiv).

Die Kenntnis des gesamten Antriebsystems ist Voraussetzung für die korrekte Auswahl des Getriebes. Man sollte folgende Daten beruecksichtigen:

ANZUTREIBENDE MASCHINE
a) Einsatz
b) Drehgeschwindigkeit
c) Leistung und/oder
d) Lastkollektiv

MOTOR
e) Typ und Eigenschaften des Motors
f) Leistung und/oder Drehmoment
g) Drehgeschwindigkeit

IT CARATTERISTICHE TECNICHE

CARICHI SULL'ALBERO DI USCITA E ENTRATA

Fr; Fa [N]
Fr = Carico radiale
Fa= Carico assiale

I valori dei carichi applicabili sugli alberi di uscita si ricavano dai diagrammi riportati in corrispondenza di ogni grandezza di riduttore, mentre quelli relativi agli alberi di entrata si trovano a pag. 88-90.
I carichi radiali ed assiali massimi non possono agire contemporaneamente.
L'entità dei carichi ammessi Fr, Fa è riferita ad una durata dei cuscinetti secondo ISO 281, corrispondente a:

n x h = $5x10^6$ per alberi in entrata
n x h = 10^5 per alberi di uscite

I riduttori in versione F vengono normalmente utilizzati per trasmettere coppia senza carichi radiali, pertanto non vengono indicate le capacità di Fr ed Fa massime.
Per informazioni ulteriori contattare il Servizio Tecnico PGR.

FR CARACTERISTIQUES TECHNIQUES

CHARGES SUR L'ARBRE DE SORTIE ET D'ENTREE

Fr; Fa [N]
Fr = Charge radiale
Fa= Charge axiale

Les valeurs des charges applicables sur l'arbre de sortie peuvent être obtenues à partir des diagrammes correspondants à chaque famille de rèducteur; celles relatives aux arbres d'entrée sont indiquées page 88-90.
Les charges radiales et axiales maximales ne sont pas cumulables.
La valeur des charges admissibles Fr et Fa se réfère à une durée des roulements établie selon la norme ISO 281, à savoir:

n x h = $5x10^6$ pour arbres d'entrée
n x h = 10^5 pour arbres de sortie

Les réducteurs version F sont généralement utilisés pour transmettre un couple sans charges radiales, aussi les charges maximales Fr et Fa ne sont-elles pas indiquées.
Pour de plus amples informations, s'adresser au Service Technico PGR.

ES CARACTERÍSTICAS TÉCNICAS

CARGAS EN EL EJE DE SALIDA Y ENTRADA

Fr; Fa [N]
Fr = Carga radial
Fa= Carga axial

Los valores de las cargas aplicables sobre los ejes de salida se obtienen de los diagramas indicados en correspondencia con cada dimensión del reductor, mientras los valores en los ejes de entrada se encuentran en la Pág. 88-90. Las cargas radiales y axiales máximas no pueden intervenir simultáneamente.
El valor de las cargas admitidas Fr, Fa está referido a una duración de los rodamientos según la norma ISO 281 y corresponde a:

n x h = $5x10^6$ para ejes de entrada
n x h = 10^5 para ejes de salida

Los reductores de la versión F generalmente se utilizan para transmitir un momento de torsión sin cargas radiales, por tanto no se indican los valores máximos de Fr y Fa.
Para más informaciones, se recomienda ponerse en contacto con el Servicio Técnico PGR.

Nell'ambito del continuo sviluppo e miglioramento del prodotto, la PGR si riserva la facoltà di apportare le modifiche sia tecniche sia dimensionali che saranno ritenute opportune, senza darne espresso preavviso.

PGR se réserve le droit d'apporter, sans préavis, les modifications de type technique et dimensionnel jugées nécessaires au développement et à l'amélioration constant de ses produits.

PGR continua desarrollando y mejorando sus productos, reservándose la facultad de efectuar las oportunas modificaciones técnicas y dimensionales sin previo aviso.

SCELTA DEL RIDUTTORE

In una trasmissione meccanica, il riduttore è un organo inserito tra motore ed utenza. Le sollecitazioni a cui è sottoposto durante il funzionamento sono funzione delle curve caratteristiche del motore come di quelle dell'utenza (assorbimento e ciclo di lavoro).

La conoscenza della trasmissione nella sua interezza è condizione necessaria per la corretta scelta del riduttore. È necessario conoscere:

UTENZA
a) Tipo di servizio
b) Velocità di rotazione
c) Potenza e/o coppia assortita
d) Ciclo di lavoro

MOTORE
e) Tipo e caratteristiche del motore
f) Potenza e/o coppia erogata
g) Velocità di funzionamento

SELECTION DU REDUCTEUR

Dans un système de transmission mécanique, le réducteur est un organe situé entre le moteur et la machine à actionner. Les sollicitations auxquelles il est soumis pendant le fonctionnement sont fonction des courbes caractéristiques du moteur ainsi que de celles la machine à actionner (absorption de puissance et cycle de travail).

La connaissance du système de transmission dans son intégralité est une condition indispensable au choix du réducteur répondant aux besoins effectifs. Ainsi est-il nécessaire de connaître:

MACHINE A ACTIONNER
a) Type de service
b) Vitesse de rotation
c) Puissance et/ou couple absorbé et/ou couple
d) Cycle de travail

MOTEUR
e) Type et caractéristiques du moteur
f) Puissance et/ou couple produits
g) Vitesse de fonctionnement

ELECCIÓN DEL REDUCTOR

En una transmisión mecánica el reductor es un órgano situado entre el motor y el equipo conducido. Las solicitaciones a las que se somete durante el funcionamiento son función de las curvas características del motor y del equipo conducido (potencia absorbida y ciclo de trabajo).

El conocimiento del sistema de transmisión es una condición necesaria para la correcta elección del reductor. Será necesario conocer:

EQUIPO CONDUCIDO
a) Tipo de servicio
b) Velocidad de rotación
c) Potencia y/o momento de torsión absorbido
d) Ciclo de trabajo

MOTOR
e) Tipo y características del motor
f) Potencia y/o momento de torsión erogado
g) Velocidad de funcionamiento

TR TEKNİK BİLGİLER

Bu bilgiler ile aşağıdaki verileri de kullanarak başlangıçta bir planet dişli ünitesi seçilebilir:

- Tahvil oranı i_{ges}
- Çalışma momenti M [kNm]
- Giriş ve çıkış şaftlarındaki yükler Fr, Fa [N]

Bunu takiben, bazı belirli planet dişli ünitesi parametrelerini aşağıda gösterildiği biçimde doğrulamalıyız:

1. Planet dişli ünitesinin giriş devri ≤ n_1 max
2. Çalışma momenti ≤ Mc
3. Giriş ve çıkış şaftları üzerine etki eden yükler ≤ Fr; Fa
4. İletilecek güç ≤ Pt (eğer sürekli çalışma yapılıyorsa)
5. Oda sıcaklığı

1 ve 5 ilişkileri kolaylıkla doğrulanabilir; 2, 3 ve 4 ilişkileri için ise aşağıdaki gibi devam etmeliyiz.

PLANET DİŞLİ ÜNİTESİNİN MOMENT AÇISINDAN DOĞRULANMASI

Eşdeğer çalışma momentinin hesaplanması
Me [kNm]

Yükler aralıklı olduğunda (Grafik 1'e bakınız), eşdeğer çalışma momenti değerini hesaplamamız gerekmektedir.

Aşağıdaki formüle dayanarak, projenin gerektirdiği tur sayısı (nxh) ardından aynı yorulma seviyesini üreten momentin belirlenebilmesi için kümülatif yük prensibi kullanılmaktadır.

EN TECHNICAL INFORMATION

With this information an initial drive selection can be made, determining the following:

- Reduction ratio i_{ges}
- Working torque M [kNm]
- Loads Fr and Fa [N] on drive output and input shafts

Subsequently, we must verify some specific drive parameters as follows:

1. Drive input rotation speed ≤n_1 max
2. Working torque ≤ Mc
3. Loads on output and input shafts ≤ Fr; Fa
4. Power to be transmitted ≤ Pt (if under continuous duty)
5. Room temperature

Relations 1 and 5 can be readily verified; as for relations 2, 3 and 4 we must proceed as follows.

VERIFICATION OF THE PLANETARY UNIT ACCORDING TO THE TORQUE

Calculation of the equivalent working torque
Me [kNm]

When loads are intermittent (see Histogram 1), we must determine the equivalent working torque value.

The cumulative load principle, based on the following formula, is used to determine the torque value which produces the same fatigue after the number of cycles (nxh) required by the project:

DE TECHNISCHE EIGENSCHAFTEN

Diese Daten ermöglichen eine erste Auswahl des Getriebes und zwar nach der Festlegung von:

- Übersetzung i_{ges}
- Arbeitsdrehmoment M [kNm]
- Belastung an der Abtriebs - und Antriebswelle Fr, Fa [N]

Danach sind folgende Parameter zu überprüfen:

1. Getriebedrehzahl ≤ n_1 max
2. Betriebsdrehmoment ≤ Mc
3. Belastungen auf der Abtriebswelle und Antriebswelle ≤ Fr; Fa
4. Wärmeleistung ≤ Pt (Dauerbetrieb)
5. Umgebungstemperatur

Die Parameter 1 und 5 kann man ohne weiteres prüfen. Was 2, 3 und 4 betrifft, ist wie folgt vorzugehen:

ÜBERPRÜFUNG DES GETRIEBES AUFGRUND DES DREHMOMENTS

Berechnung des äquivalenten Drehmoments
Me [kNm]

Wenn die Belastung während der Einsatzdauer variiert (siehe z.B. Diagramm 1), soll man einen Durchschnittswert ermitteln.

Nach dem Lastkollektiv wird das Drehmoment mit der unten angegebenen Formel berechnet.

$$Me = \sqrt[6]{M_1^{\,6}\,\frac{(n_1 \times h_1)}{(n \times h)} + M_2^{\,6}\,\frac{(n_2 \times h_2)}{(n \times h)} + M_3^{\,6}\,\frac{(n_3 \times h_3)}{(n \times h)}}$$

Grafik 1
Histogram 1
Histogramm 1

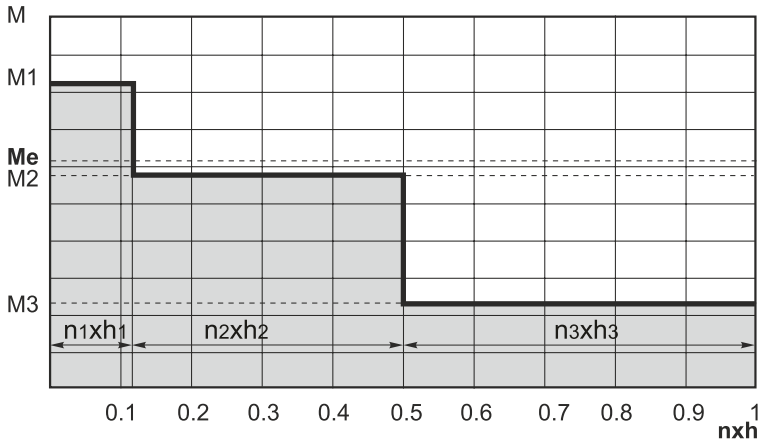

IT CARATTERISTICHE TECNICHE

Queste informazioni permettono una prima scelta dei riduttori dopo aver determinato:

- Rapporto di trasmissione i_{ges}
- Coppia di lavoro M [kNm]
- Carichi sull'albero in uscita e in entrata al riduttore Fr; Fa [N]

Successivamente si dovrà procedere alle verifiche dei parametri caratteristici dei riduttori come segue:

1. Velocità in ingresso al riduttore ≤ n_1 max
2. Coppia di lavoro ≤ Mc
3. Carichi applicati all'albero in uscita e in entrata ≤ Fr; Fa
4. Potenza da trasmettere ≤ Pt (se in servizio continuo)
5. Temperatura ambiente

Le relazioni 1 e 5 sono di immediata verifica mentre per la 2, la 3 e la 4 si procede come segue:

VERIFICA DEL RIDUTTORE IN FUNZIONE DELLA COPPIA

Calcolo della coppia equivalente
Me [kNm]

Quando il carico è variabile nel tempo (Istogramma 1), si deve determinare il valore della coppia equivalente.

Con il criterio del cumulativo di carico si c alcola, con la formula sotto indicata, la coppia in grado di provocare lo stesso livello di usura dopo il numero di cicli (nxh) richiesto dal progetto.

FR CARACTERISTIQUES TECHNIQUES

Ces informations permettent une première sélection après avoir établi:

- Rapport de transmission i_{ges}
- Couple de travail M [kNm]
- Charges sur l'arbre de sortie et d'entrée sur le réducteur Fr; Fa [N]

Ensuite, il est nécessaire de procéder aux contrôles des paramètres spécifiques des réducteurs, comme suit:

1. Vitesse en entrée sur le réducteu ≤ n_1 max
2. Couple de travail ≤ Mc
3. Charges appliquées sur l'arbre en sortie et en entrée ≤ Fr; Fa
4. Puissance à transmettre ≤ Pt (si le service est de type continu)
5. Température ambiante

Les paramètres 1 et 5 peuvent être calculés directement alors que pour les paramètres 2, 3 et 4, il est nécessaire de procéder comme suit:

CONTRÔLE DU RÉDUCTEUR EN FONCTION DU COUPLE

Calcul du couple equivalent
Me [kNm]

Lorsque la charge varie dans le temps (voir histogramme 1), il est nécessaire d'établir la valeur du couple équivalent.

Par l'intermédiaire du critère du cumul des charges est calculée, au moyen de la formule ci dessous, la valeur de couple qui détermine le même niveau d'usure à l'issue du nombre de cycles (nxh) requis par le projet.

ES CARACTERÍSTICAS TÉCNICAS

Estas informaciones permiten una primer elección de los reductores después de haber determinado:

- Relación de transmisión i_{ges}
- Momento de trabajo M [kNm]
- Cargas en el eje de salida y entrada del reductor Fr; Fa [N]

Después se tendrán que efectuar las verificaciones de los parámetros característicos de los reductores como sigue:

1. Velocidad de entrada en el reductor ≤ $n_1$máx.
2. Momento de trabajo ≤ Mc
3. Cargas aplicadas en el eje de salida y entrada ≤ Fr; Fa
4. Potencia a transmitir ≤ Pt (si el servicio es conuo)
5. Temperatura ambientetinuo

Las relaciones 1 y 5 se verifican directamente mientras para las 2, 3 y 4 se procede como sigue:

VERIFICACIÓN DEL REDUCTOR SEGÚN EL MOMENTO DE TORSIÓN

Cálculo del momento equivalente
Me [kNm]

Cuando la carga varía durante el tiempo (Histograma 1), se tendrá que determinar el valor del momento equivalente.

Se emplea el criterio de la carga acumulada para calcular, con la fórmula abajo indicada, el momento capaz de producir el mismo nivel de desgaste para el número de ciclos (nxh) requerido por el proyecto.

$$Me = \sqrt[6]{M_1^6 \frac{(n_1 \times h_1)}{(n \times h)} + M_2^6 \frac{(n_2 \times h_2)}{(n \times h)} + M_3^6 \frac{(n_3 \times h_3)}{(n \times h)}}$$

Istogramma 1
Histogramme 1
Histogram 1

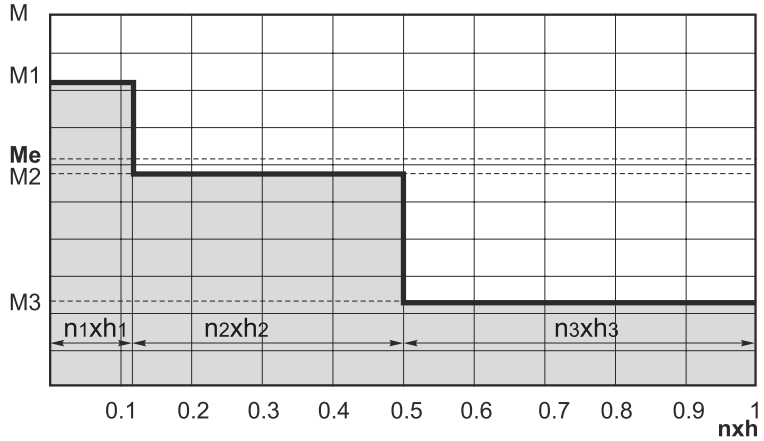

TR TEKNİK BİLGİLER

Süre Faktörü
fh

Endüstriyel alanlarda ve çalışma tur sayısı nxh değerinin $2x10^4$'ü aştığı durumlarda, katalogta gösterilen Mc momentinin, makinenin proje tarafından gereksinim duyulan tur sayısında (nxh) çalışabilmesine olanak tanıyan yeni bir değere uyarlanması için bir süre faktörü fh (Diyagram 1'e bakınız) dikkate almalıyız.

EN TECHNICAL INFORMATION

Duration factor
fh

In industrial installations and when ever the number of working cycles nxh exceeds $2x10^4$, we must consider a duration factor fh (see curve 1) in order to adapt the Mc torque shown in the catalogue to a new value which allows the machine to operate at the number of cycles (nxh) required by the project.

DE TECHNISCHE EIGENSCHAFTEN

Lebensdauerfaktor
fh

Sollte die sich nach dem Einsatz ergebende Anzahl von Arbeitszyklen den Wert $2x10^4$ übersteigen, dann ist mit Hilfe des Diagramms1 fh auszuwählen. Auf diese Weise wird der Katalogwert Mc an die tatsaechliche Vorgabe nxh angepasst.

Diyagram 1
Curve 1
Diagramm 1

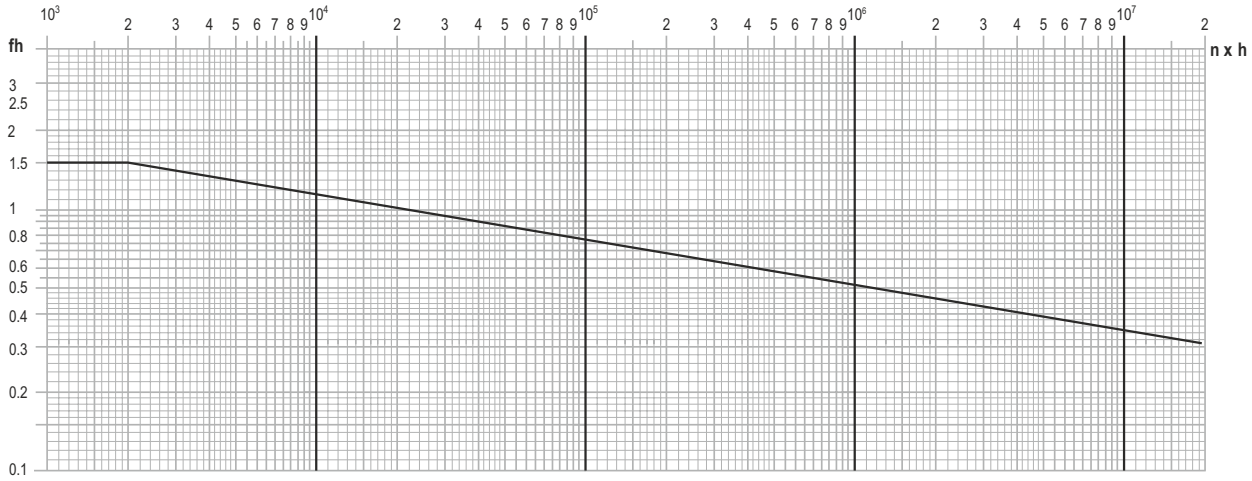

Servis faktörü fs değerinin hesaplanması

Aralıklı hareketler ve ilk çalıştırma ve durdurma sırasında ortaya çıkan aşırı yüklerden kaynaklanan şokların etkileri, servis faktörü (fs) değeri kullanılarak hesaplanmalıdır.
Tablo 2, çalışma tipine göre servis faktörü (fs) değerlerini göstermektedir.

Service factor fs calculation

The effect of shocks generated by intermittent motion and overloads during starts and stops must be calculated, introducing a service factor fs. Table 2 indicates the service factors fs in relation to the type of operation.

Betriebsfaktor fs

Die Stöße die auf Unregelmässigkeit des Betriebes zurückzuführen sind, sowie die Spitzenbelastungen während des Einschal toder Bremsvorgangs werden mittels des Betriebsfaktors berücksichtigt.
Die Tabelle 2 zeigt die Betriebsfaktoren fs eingestuft nach Einsatzbedingungen.

	Yük sınıflandırmaları / Load classifications / Belastungskennwert											
	U Uniform Yük / Uniform / Gleichmässig				M Orta Yük / Moderate / Mittelschwer				H Ağır Yük / Heavy / Schwer			
Saat-gün / Hours-day Stunden pro Tag Başlatma sayısı Start-time Starts pro Stunde	< 1.0	1 - 4	4 - 8	8 - 24	< 1.0	1 - 4	4 - 8	8 - 24	< 1.0	1 - 4	4 - 8	8 - 24
< 5	0.8	0.9	1.0	1.5	0.9	1.0	1.3	1.9	1.0	1.5	1.9	2.4
5 - 50	1.0	1.0	1.4	1.7	1.0	1.3	1.6	1.9	1.4	1.8	2.1	2.5
> 50	1.3	1.5	1.7	1.9	1.4	1.7	1.9	2.2	1.7	2.1	2.5	2.9
	fs											

Tablo 2 / Table 2 / Tabelle 2

İşletim değerleri hidrolik ve elektrik motorlarına sahip planet dişli üniteleri için geçerlidir.
Eğer farklı tiplerde motorlar kullanılıyorsa (içten yanmalı motorlar...v.b.) lütfen PGR Teknik Departmanımız ile iletişime geçiniz.

Operating values refer to drives with hydraulic and electric motors.
If other types of motors are operated (internal combustion engine), please contact our PGR Technical Department.

Die werte gelten bei betrieb mit hydraulikund elektromotor. Wenn die Einheiten unter abweichenden Bedingungen verwendet bzw. werden abweichende Motortypen (Verbrennungsmotore) verwendet, setzen sie sich bitte mit unserem Kundenservice in Verbindung.

IT CARATTERISTICHE TECNICHE

Fattore di durata
fh

Nelle applicazioni industriali o di norma quando il numero di cicli di lavoro previsto nxh supera $2x10^4$, si rende necessario introdurre un fattore di durata fh (con l'ausilio del Diagramma 1) per adeguare il valore della coppia di catalogo Mc adun valore che permetta di raggiungere il numero di cicli (nxh) designato a progetto.

FR CARACTERISTIQUES TECHNIQUES

Facteur de duree
fh

Sur toutes les applications du secteur industriel ou lorsque le nombre de cycles de travail prévu nxh dépasse $2x10^4$, il est nécessaire d'introduire un facteur de durée fh (á l'aide du diagramme 1) dans le but d'adapter la valeur du couple de catalogue Mc à une valeur qui permette d'atteindre le nombre de cycles (nxh) requis par le projet.

ES CARACTERÍSTICAS TÉCNICAS

Factor de desgaste
fh

En las aplicaciones industriales o en general cuando el número de ciclos de trabajo previsto nxh supera $2x10^4$, sera necesario introducir un factor de duración fh (con la ayuda del Diagrama 1) para adecuar el valor del momento indicado en el catálogo Mc a un valor que permita alcanzar el número de ciclos (nxh) requerido en el pro yecto.

Diagramme1
Diagramme1
Diagrama1

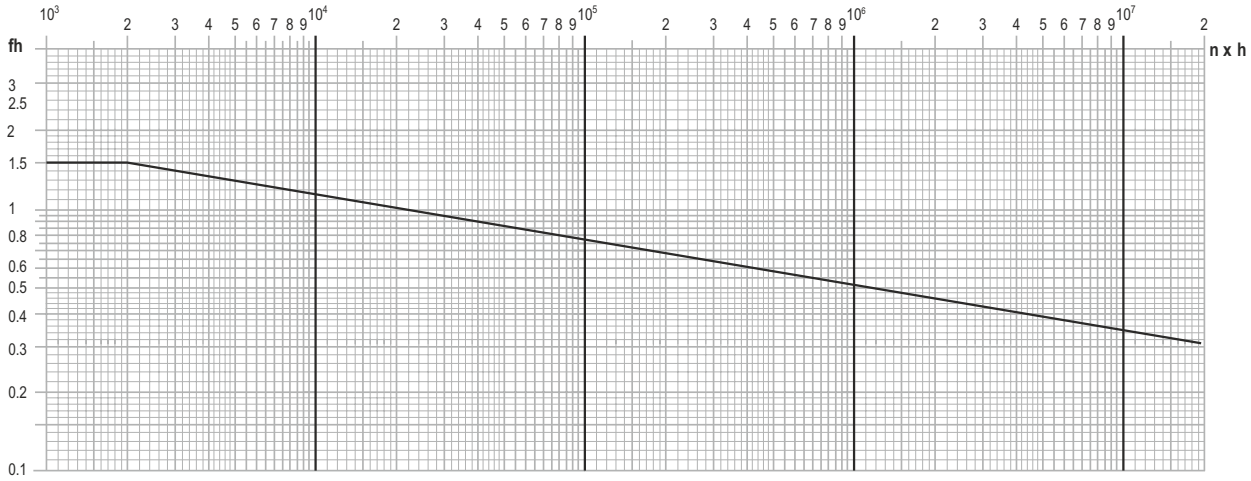

Determinazione del fattore di servizio fs

L'effetto degli urti derivanti da irregolarità del moto, dai sovraccarichi nei transitori di velocità (avviamenti ed arresti), viene conteggiato introducendo un fattore di servizio fs. La Tabella 2 indica i fattori fs in funzione del tipo di applicazione.

Calcul du facteur de service fs

L'effet des chocs résultant des irrégularités de mouvement, des surcharges lors des pics de vitesse (mises en marche et arrêts) est pris en compte en introduisant un facteur de service fs.
Le Tableau 2 indique les facteurs fs selon le type d'application.

Determinación del factor de servicio fs

El efecto de los choques ocasionados por la irregularidad del movimiento y las sobrecargas (durante las puestas en marcha y las detenciones) se deberá calcular-introduciendo un factor de servicio fs.
La Tabla 2 indica los factores fs en función del tipo de aplicación.

	Condizioni di carico / Conditions de charge / Condiciones de carga											
	U Uniforme / Uniforme / Uniforme				M Moderato / Moyenne / Moderado				H Pesante / Loude / Pesado			
Ore-giorno / Heures-jour / Horas-dia Avviamenti-ora Demarrages par heure Puestas en marcha-horas	< 1.0	1 - 4	4 - 8	8 - 24	< 1.0	1 - 4	4 - 8	8 - 24	< 1.0	1 - 4	4 - 8	8 - 24
< 5	0.8	0.9	1.0	1.5	0.9	1.0	1.3	1.9	1.0	1.5	1.9	2.4
5 - 50	1.0	1.0	1.4	1.7	1.0	1.3	1.6	1.9	1.4	1.8	2.1	2.5
> 50	1.3	1.5	1.7	1.9	1.4	1.7	1.9	2.2	1.7	2.1	2.5	2.9
	fs											

Tabella 2 / Tableau 2 / Tabla 2

I valori riportati sono per azionamento con motori idraulici e elettrici.
Nel caso vengano utilizzati altri tipi di motori (cumbustione interna), contattare il nostro Servizio Tecnico PGR.

Les valeurs sont indiquées pour des actionnements à moteurs hydrauliques et électriques.
Pour l'utilisation d'autres types de moteur (à combustion interne), prendre contact avec le Service Technico PGR.

Los valores indicados son para accionamiento con motores hidráulicos y eléctricos.
Si se utilizaran otros tipos de motores (combustión interna), se aconseja ponerse en contacto con nuestro Servicio Técnico PGR.

TR TEKNİK BİLGİLER

Bu bölümün sonunda yer alan Tablo 3, yük sınıflandırmalarına bazı örnekler vermektedir.

Aynı zamanda

$$Mp \leqslant M_{max}$$

Mp = Çalışma pik momenti.

PLANET DİŞLİ ÜNİTESİNİN ÇIKIŞ ŞAFTI YÜKLERİ AÇISINDAN DOĞRULANMASI

Eşdeğer Çalışma Yükleri
Fre; Fae [N]

Eşdeğer çalışma momentlerini hesapladığımız biçimde, yükler zamanla değişiklik gösteriyorsa, ortalama eşdeğer yük değerini belirlememiz gereklidir.
Daha önce olduğu gibi, aşağıdaki formüle dayanarak, projenin gerektirdiği tur sayısı (nxh) ardından aynı yorulma seviyesini üreten momentin belirlenebilmesi için kümülatif yük prensibi, kullanılmaktadır.

Servis faktörü fs

Servis faktörü (fs) değeri, momentin hesaplandığı gibi Tablo 2 ve 3 kullanılarak hesaplanabilir.

EN TECHNICAL INFORMATION

Table 3 at the end of this section includes some examples of load classifications.

It is also required that

$$Mp \leqslant M_{max}$$

Mp = working peak torque

VERIFICATION OF THE DRIVE ACCORDING TO OUTPUT SHAFT LOADS

Equivalent working loads
Fre; Fae [N]

In the same manner that we calculated the equivalent working torque, when loads vary over time, we must determine the value of the average equivalent load.
As before, we use the cumulative load principle, based on the following formula, to determine the load value which produces the same fatigue on the bearings after the number of cycles (nxh) required by the project:

Service factor fs

Service factor fs can be calculated using Tables 2 and 3 in the same manner as calculating the torque.

DE TECHNISCHE EIGENSCHAFTEN

Die Tabelle 3 am Abschnittsende zeigt einige Beispiele der Einstufung nach Einsatzbedingungen.

Bedingung ist daß

$$Mp \leqslant M_{max}$$

Mp = Spitzenmoment während des Betriebes

ÜBERPRÜFUNG DER GETRIEBEAUSWAHL NACH DER AUF DER ABTRIEBSWELLE WIRKENDEN BELASTUNGEN

Berechnung der equivalentbelastung
Fre; Fae [N]

Wie bereits bei der Berechnung des Drehmoments, soll man die equivalente Wellenbelastung ermitteln.
Unter Berücksichtigung des Lastkollektivs wird mittels der unten angegebenen Damit wird die Haltbarkeit der Lagerung gewaehrleistet. Formel die resultierende Kraft Fe ermittelt:

$$Fe = \sqrt[10/3]{F_1^{10/3}\,\frac{(n_1 x\, h_1)}{(n\, x\, h)} + F_2^{10/3}\,\frac{(n_2 x\, h_2)}{(n\, x\, h)} + F_3^{10/3}\,\frac{(n_3 x\, h_3)}{(n\, x\, h)}}$$

Service factor fs

Service factor fs can be calculated using Tables 2 and 3 in the same manner as calculating the torque.

Betriebsfaktor fs

Den Betriebsfaktor fs ermittelt man mit Hilfe der Tabelle 2 und 3 mit der gleichen Vorgehenswise wie bei der entsprechenden Momentenberechnung.

$$Me \times fs \leqslant Mc \times fh$$

$$Fre \times fs \leqslant Fr \times fh$$
$$Fae \times fs \leqslant Fa \times fh$$

IT CARATTERISTICHE TECNICHE

La Tabella 3 a fine paragrafo indica alcuni esempi di classificazione delle condizioni di carico.

FR CARACTERISTIQUES TECHNIQUES

La Tableau 3 en fin de chapitre fournit quelques exemples de classification des conditions de charge.

ES CARACTERÍSTICAS TÉCNICAS

La Tabla 3 que está en el final del párrafo indica algunos ejemplos de clasificación de las condiciones de carga.

$$Me \times fs \leqslant Mc \times fh$$

Si richiede inoltre che

$$Mp \leqslant M_{max}$$

Mp = coppia di picco in funzionamento

Il est nécessaire que

$$Mp \leqslant M_{max}$$

Mp = Couple de pic en fonctionnement

además se requiere que

$$Mp \leqslant M_{max}$$

Mp = momento de pico durante el funcionamiento.

VERIFICA DEL RIDUTTORE IN FUNZIONE DEI CARICHI SULL'ALBERO DI USCITA E DI ENTRATA

CONTRÔLE DU RÉDUCTEUR EN FONCTION DES CHARGES SUR L'ARBRE DE SORTIE ET D'ENTRÉE

VERIFICACIÓN DEL REDUCTOR SEGÚN LAS CARGAS EN EL EJE DE SALIDA Y DE ENTRADA

Calcolo dei carichi equivalenti
Fre; Fae [N]

Analogamente a quanto fatto per il calcolo della coppia equivalente, quando il carico è variabile nel tempo, si deve determinare il valore del carico medio equivalente.
Con il criterio del cumulativo di carico si determina, con la formula sotto indicata, il carico in grado di provocare lo stesso livello di usura sui cuscinetti dopo il numero di cicli (nxh) richiesto dal progetto:

Calcul des charges equivalentes
Fre; Fae [N]

De même que pour le calcul du couple équivalent, lorsque la charge varie dans le temps, il est nécessaire d'établir la valeur de la charge moyenne équivalente.
Par l'intermédiaire du critère du cumul des charges est calculée, au moyen de la formule ci-dessous, la charge qui détermine le même niveau d'usure des roulements à l'issue du nombre de cycles (nxh) requis par le projet:

Cálculo de las cargas equivalentes
Fre; Fae [N]

En modo análogo a como se calculó el momento equivalente, cuando la carga varía durante el tiempo, se tendrá que determinar el valor de la carga media equivalente.
Como antes, se empleó el criterio de la carga acumulada y su valor se determina con la fórmula abajo indicada, la carga es capaz de ocasionar el mismo nivel de desgaste en los rodamientos después del número de ciclos (nxh) requerido por el proyecto:

$$Fe = \sqrt[10/3]{F_1^{10/3}\,\frac{(n_1 \times h_1)}{(n \times h)} + F_2^{10/3}\,\frac{(n_2 \times h_2)}{(n \times h)} + F_3^{10/3}\,\frac{(n_3 \times h_3)}{(n \times h)}}$$

Fattore di servizio fs

Fattore di servizio fs si calcola con l'ausilio delle Tabelle 2 e 3 analogamente a quanto fatto per la coppia.

Le facteur de service fs

Le facteur de service fs est calculé à l'aide des Tableaux 2 et 3 selon les mêmes principes que pour le couple.

Factor de servicio fs

El factor de servicio fs se calcula con la ayuda de las Tablas 2 y 3 en modo análogo al cálculo del momento.

$$Fre \times fs \leqslant Fr \times fh$$
$$Fae \times fs \leqslant Fa \times fh$$

TR TEKNİK BİLGİLER

RADYAL YÜKLER
Fr [N]

Bu bölüm müşteri için seçilen planet dişli ünitesinin giriş ve çıkış şaftlarındaki rulman ömrünü ve/veya izin verilen maksimum radyal yük değerini belirlemek için gerekli olan bilgileri sağlamaktadır.

Giriş veya çıkış şaftının kabul edilebilir radyal yük değerinin, yatakların sahip olması gereken servis ömrü ve yük konumu bilinerek belirlenmesi.

Bilinen parametreler:
- Giriş veya çıkış tipi
  Giriş:
  EL, EML, EM, EP, ET
  Çıkış:
  MS, MC, PS, PC
- Mesafe E [mm]
  (Yük konumunun çıkış şaftı faturasından mesafesi)
- Gerekli rulman servis ömrü [h]
- Şaft/mil devir sayısı [d/d]

Seçilen giriş veya çıkış şaftının kabul edilebilir radyal yük kapasitesini, bilinen parametrelere dayanarak belirlemek için aşağıda anlatılmış olan adımları izleyiniz:

1. Seçilen giriş veya çıkış şaftı için rulman servis ömrü tablosunu seçin (çıkış şaftı tiplerine ait radyal yük grafikleri planet dişli ünitesi teknik sayfalarında gösterilmektedir, giriş tiplerinin grafikleri ise sayfa 88-90' de bulunabilir).

2. Grafiği kullanarak E mesafesine göre radyal yük (Fr) değerini bulunuz.

EN TECHNICAL INFORMATION

RADIAL LOADS
Fr [N]

This section provides the catalogue user with the information needed to determine the maximum allowable radial load and/or the service life of the bearings on input and output shafts of the selected drive.

How to determine the admissible radial load of an input or output shaft knowing the required service life of the bearings and the load position.

Known parameters:
- Input or output version
  Input:
  EL, EML, EM, EP, ET
  Output:
  MS, MC, PS, PC
- Distance E [mm]
  (Distance of the load position from output shaft shoulder)
- Required bearing service life [h]
- Shaft rotation speed [min^{-1}]
  -

To determine the admissible radial load capacity of a selected input or output shaft, based on known parameters, follow the steps described below:

1. Select the bearing service life chart for the selected input or output shaft (radial load curves for output shaft versions are shown on the drive technical sheets, while the curves for input versions can be found on pages 88-90.

2. Use the curve to find the radial load (Fr) value with reference to the distance E.

DE TECHNISCHE EIGENSCHAFTEN

RADIALLAST
Fr [N]

Dieser Abschnitt soll dem Benutzers des Katalogs in den nachfolgenden Punkten Unterstützung bieten: die Feststellung der max. übertragbaren Radiallast und / oder der Lebensdauer der Lagerungen an Anund Abtriebswelle der gewünschten Getriebeausführung.

Wie wird die Radiallast einer Vollwelle in Anoder Abtrieb festgestellt, wenn die geforderte Lebensdauer der Lager und der Eingriffspunkt der Last bekannt sind.

Bekannte Parameter:
- Ausführung
  Antriebswelle:
  EL, EML, EM, EP, ET
  Abtriebswelle:
  MS, MC, PS, PC
- Abstand E [mm]
  (Abstand des Lasteingriffspunktes vom Wellenansatz)
- Geforderte Lebensdauer der Lager [h]
- Drehgeschwindigkeit [min^{-1}]

Um die Radiallast der An-oder Abtriebswelle auf der Basis der vorgenannten, bekannten Parameter zu bestimmen, ist jetzt gemäss dem folgenden Ablauf vorzugehen:

1. Auswählen der entsprechenden Grafik (Lebensdauer der Lager an An-oder Abtriebswelle) gemäss gewünschter Ausführung. Die entsprechenden Diagramme der uebertragbaren Radiallast im Abtrieb sind in den modellspezifischen Datenblaettern ersichtlich, dagegen sind die Diagramme bezueglich des Antriebs auf den Seiten 88-90 zu finden.

2. Den Radiallast - Wert (Fr) fest - stellen, der mit dem vorgegebenen Abstand E korrespondiert.

Giriş ve çıkış şaftı versiyonları için rulman ömrü eğrisi örneği.

Example of bearing service life curve for input and/or output shaft versions.

Grafisches Beispiel einer Kurve der Lagerung im Antrieb/Abtrieb.

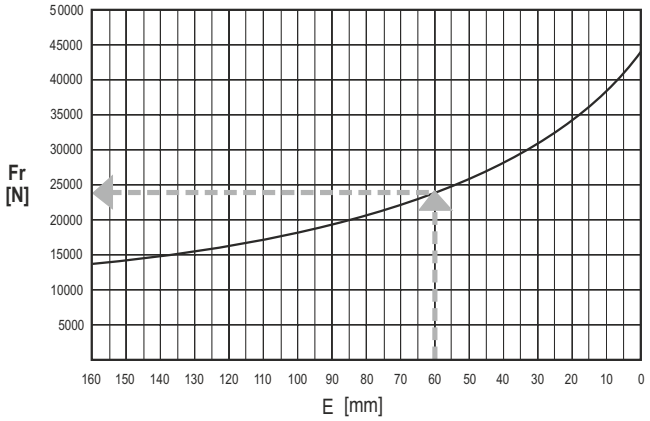

IT CARATTERISTICHE TECNICHE

CARICHI RADIALI
Fr [N]

Questo capitolo vuole essere di supporto all'utilizzatore del catalogo per determinare il carico radiale massimo accettabile e/o la durata di vita dei cuscinetti degli alberi di entrata e uscita del riduttore selezionato.

Come determinare il carico radiale massimo ammissibile di un albero di entrata o di uscita conoscendo la durata di vita richiesta dei cuscinetti e la posizione del carico.

Parametri conosciuti:
- Versione del supporto
  Entrata:
  EL, EML, EM, EP, ET
  Uscita:
  MS, MC, PS, PC
- Distanza E [mm]
  (Distanza del carico dallo spallamento dell'albero)
- Durata di vita richiesta dei cuscinetti [h]
- Velocità di rotazione dell'albero [min^{-1}]

Per determinare la capacità di carico radiale massimo ammissibile di un albero di entrata o di uscita, in base ai parametri conosciuti, seguire il seguente procedimento:

1. Selezionare il grafico della curva dei cuscinetti per l'albero di uscita o entrata selezionato. (I grafici relativi ai carichi applicabili in uscita sono riportati nelle sezioni dei dati tecnici di ogni riduttore, mentre quelli relativi agli alberi di entrata si trovano a pag. 88-90).

2. Trovare nel grafico il valore del carico radiale (Fr) riferito alla distanza E.

FR CARACTERISTIQUES TECHNIQUES

CHARGES RADIALES
Fr [N]

Le présent chapitre a pour but de fournir une aide à l'utilisateur du catalogue pour déterminer la charge radiale maximum admissible et/ou la durée de vie des roulements des arbres d'entrée et sortie du réducteur sélectionné.

Comment déterminer la charge radiale maximum acceptable d'un arbre d'entrée ou de sortie en connaissantla durée de vie requise des roulements et la position de la charge.

Paramètres connus:
- Version du support
  Entrée
  EL, EML, EM, EP, ET
  Sortie
  MS, MC, PS, PC
- Distance E [mm] (Distance entre la charge et la base de l'arbre)
- Durée de vie requise des roulements [h]
- Vitesse de rotation de l'arbre [min^{-1}]

Pour déterminer la capacité de charge radiale maximum admissible d'un arbre d'entrée ou de sortie, en fonction des paramètres connus, procéder comme suit:

1. Sélectionner le graphique de la courbe des roulements pour l'arbre de sortie ou d'entrée sélectionné (les graphiques relatifs aux charges applicables en sortie figurent dans les sections des données techniques de chaque réducteur, alors que ceux relatifs aux arbres d'entrée se trouvent pages 88-90).

2. Trouver sur le graphique, la valeur de la charge radiale (Fr) en fonction de la distance E.

ES CARACTERÍSTICAS TÉCNICAS

CARGAS RADIALES
Fr [N]

Este capítulo sirve para ayudar al usuario del catálogo a determinar la carga radial máxima aceptable y/o el tiempo de vida de los rodamientos de los ejes de entrada y salida del reductor seleccionado.

Cómo determinar la carga radial máxima admisible de un eje de entrada o de salida conociendo el tiempo de vida re querido por los rodamientos y la posición de la carga.

Parámetros conocidos:
- Tipo de soporte
  Entrada:
  EL, EML, EM, EP, ET
  Salida:
  MS, MC, PS, PC
- Distancia E [mm] (Distancia entre la carga y la base del eje)
- Tiempo de vida requerido de los roda mientos [h]
- Velocidad de rotación del eje [min^{-1}]

Para determinar la capacidad admisible de carga radial de un eje de entrada o de salida, en base a los parámetros conocidos, seguir el siguiente procedimiento:

1. Seleccionar el gráfico de la curva de los rodamientos para el eje de salida o entrada seleccionado. (Los gráficos de las cargas aplicables en los ejes de salida se indican en las secciones de los datos técnicos de cada reductor, mientras que los gráficos de los ejes de entrada se encuentran en la Pág. 88-90).

2. Encontrar en el gráfico el valor de la carga radial (Fr) referida a la distancia E.

Esempio di diagramma della curva dei cuscinetti dei supporti di entrata e uscita.

Exemple de diagramme de la courbe des roulements des supports d'entrée et de sortie.

Ejemplo de diagrama de la curva de los rodamientos de los soportes de entrada y salida.

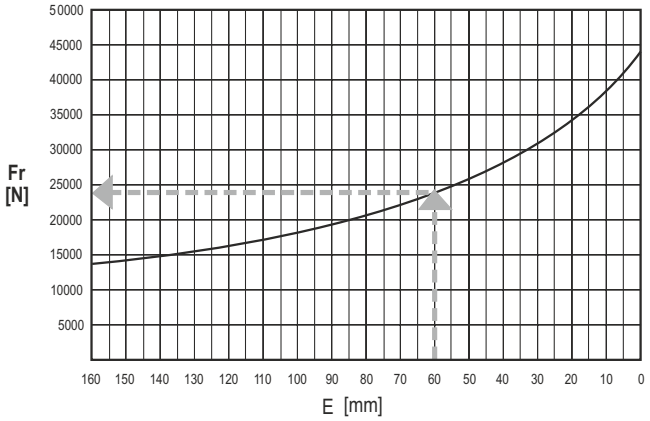

TR TEKNİK BİLGİLER

3. Fr, h yatak servis ömrüne sahip bir şaftın, E konumunda dayanabileceği maksimum yük değeridir.

Çıkış Tipi

Giriş Tipi

h = Rulman ömrü [saat]
n_1 = Giriş devri [d/d]
n_2 = Çıkış devri [d/d]

Eğer daha önceki formüller kullanılarak hesaplanmış olan yatak rulman servis ömrü müşterinin gereksinimlerini karşılamıyorsa, rulmanların servis ömrü konusundaki gereksinimleri karşılayabilmesini sağlayacak olan radyal yük düzeltme faktörü değerinin, aşağıdaki prosedür izlenerek belirlenmesi gerekmektedir:

4. Şaftın, gereksinim duyulan servis ömrü süresince tamamlayacağı tur sayısını hesaplayın:

$nxh = n_{1\text{-}2}$ [d/d] x h [h]

5. Radyal yük düzeltme faktörü grafiğini kullanarak, 4 numarada hesaplanan tur sayısına denk gelen K değerini hesaplayın. (Çıkış şaftı tiplerine ait radyal yük düzeltme grafikleri planet dişli ünitesi teknik sayfalarında gösterilmektedir, giriş tiplerinin grafikleri ise sayfa 88-90' de bulunabilir).

EN TECHNICAL INFORMATION

3. Fr will be the max. load the shaft can bear at position E for a bearing service life h of:

Output version

$$h = \frac{10^5}{n_2}$$

Input version

$$h = \frac{5 \times 10^6}{n_1}$$

h = Bearings life time [h]
n_1 = Input shaft speed [min^{-1}]
n_2 = Output shaft speed [min^{-1}]

If the bearing service life, as calculated with the previous formulas, does not meet customer requirements, the radial load correction factor that would allow the bearings to meet the service life requirements must be determined according to the following procedure:

4. Determine the no. of cycles that the shaft will complete during the required service life:

$nxh = n_{1\text{-}2}$ [min^{-1}] x h [h]

5. Use the radial load correction factor curve to determine the K value corresponding to the no. of cycles calculated in point 4. (radial load correction factor curves for output shaft versions are shown on the drive technical sheets, while the curves for input versions can be found on pages 88-90).

DE TECHNISCHE EIGENSCHAFTEN

3. Der festgestellte Wert (Fr) ist die max. tragbare Radiallast in Verbindung zum Abstand E bei einer Lebensdauer der Lager h von:

Abtriebswelle

Antriebswelle

h = Lebensdauer der Lager [h]
n_1 = Drehgeschwindigkeit der Antriebswelle [min^{-1}]
n_2 = Drehgeschwindigkeit der Abtriebswelle [min^{-1}]

Für den Fall, dass die so kalkulierte Lebensdauer nicht mit der geforderten Lebensdauer übereinstimmt, wird der Korrekturkoeffizient K der Radiallast eingesetzt. Dieses wird mit dem nachfolgenden Ablauf erreicht:

4. Bestimmung von Anzahl der Zyklen über die geforderte Lebensdauer der Lager:

$nxh = n_{1\text{-}2}$ [min^{-1}] x h [h]

5. Feststellen des Korrekturkoeffizients (K) der Radiallast in der entsprechenden Grafik korrespondierend mit dem Punkt 4. Die entsprechenden Diagramme des Korrekturkoeffizienten im Bezug auf die tragbare Radiallast im Abtrieb sind in den modellspezifischen Datenblaettern ersichtlich, dagegen sind die Diagramme bezueglich des Antriebs auf den Seiten 88-90 zu finden.

Giriş ve/veya çıkış tipine göre radyal yük düzeltme faktör grafiği.

Example of radial load correction factor curve for input and/or output shaft versions.

Grafisches Beispiel des Korrekturkoeffizienten der Radiallast.

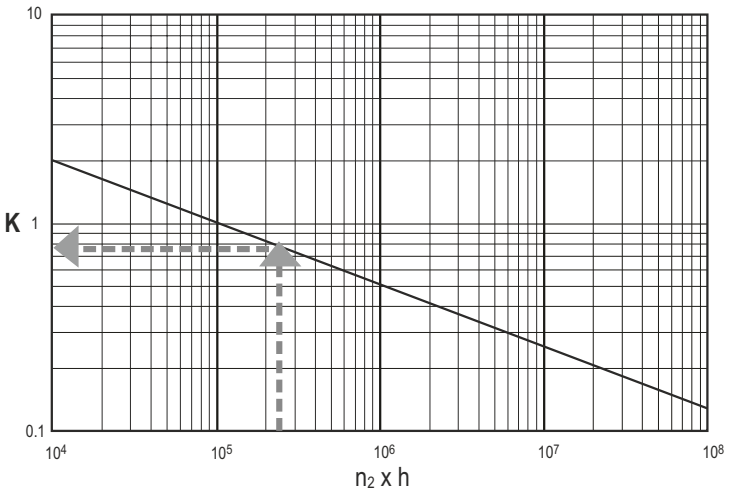

IT CARATTERISTICHE TECNICHE

3. Il valore di Fr trovato è il valore di carico radiale massimo accettabile nella posizione E per una durata di vita dei cuscinetti h di:

Albero di uscita

Albero di entrata

h = Durata di vita dei cuscinetti [h]
n_1 = Velocità di rotazione dell'albero entrata [min^{-1}]
n_2 = Velocità di rotazione dell'albero uscita [min^{-1}]

Nel caso la durata di vita dei cuscinetti, calcolata con le suddette formule, non corrisponda a quella richiesta occorrerà determinare il coefficiente di corezione del carico radiale per ottenere la durata richiesta seguendo il seguente procedimento:

4. Determinare il numero di cicli che l'albero compierà durante la durata di vita richiesta:

$nxh = n_{1-2}$ [min^{-1}] x h [h]

5. Determinare, nel grafico del coefficiente di correzione del carico radiale, il valore K corrispondente al numero di cicli calcolati al punto 4.
(I grafici relativi ai coefficienti di correzione riferiti ai carichi applicabili in uscita sono riportati nelle sezioni dei dati tecnici di ogni riduttore, mentre quelli relativi agli alberi di entrata si trovano a pag. 88-90).

FR CARACTERISTIQUES TECHNIQUES

3. La valeur Fr trouvée est la valeur de charge radiale maximum acceptable dans la position E pour une durée de vie des roulements h de:

Arbre de sortie

$$h = \frac{10^5}{n_2}$$

Arbre d'entrée

$$h = \frac{5 \times 10^6}{n_1}$$

h = durée de vie des roulements (h)
n_1 = vitesse de rotation l'arbre d'entrée [min^{-1}]
n_2 = vitesse de rotation de l'arbre de sortie [min^{-1}]

Si la durée de vie des roulements, calculée par le biais des formules indiquées plus haut, ne correspond pas à celle requise, il est nécessaire de déterminer le coefficient de correction de la charge radiale pour obtenir la durée requise en procédant comme suit:

4. Établir le nombre de cycles accomplis par l'arbre pendant la durée de vie requise:

$nxh = n_{1-2}$ [min^{-1}] x h [h]

5. Établir, à l'aide du graphique du coefficient de correction de la charge radiale, la valeur K correspondant au nombre de cycles calculé au point 4 (les graphiques relatifs aux coefficients de correction des charges applicables en sortie figurent dans les sections des données techniques de chaque réducteur, tandis que ceux relatifs aux arbres d'entrée se rouvent pages 88-90).

ES CARACTERÍSTICAS TÉCNICAS

3. El valor obtenido de Fr es el valor máximo de carga radial aceptable en la posición E para un tiempo de vida de los rodamientos h de:

Eje de salida

Eje de entrada

h = Tiempo de vida útil de los rodamientos (h)
n_1 = Velocidad de rotación del eje de entrada [min^{-1}]
n_2 = Velocidad de rotación del eje de salida [min^{-1}]

Si el tiempo de vida de los rodamientos, calculado con las respectivas fórmulas, no correspondiera al solicitado será necesario determinar el coeficiente de corrección de la carga radial para obtener la duración de la carga radial para obtener la duración requerida de los rodamientos siguiendo el siguiente procedimiento:

4. Determinar el número de ciclos que efectuará el eje durante el tiempo de vida requerido:

$nxh = n_{1-2}$ [min^{-1}] x h [h]

5. Determinar, en el gráfico del coeficiente de corrección de la carga radial, el valor K correspondiente al número de ciclos calculado en el punto 4. (Los gráficos de los coeficientes de corrección para las cargas aplicadas en los ejes de salida se indican en las secciones de los datos técnicos de cada reductor, mientras que los datos de los ejes de entrada-se encuentran en la Pág. 88-90).

Esempio di diagramma del coefficiente di correzione del carico radiale.

Exemple de diagramme du coefficient de correction de la charge radiale.

Ejemplo de diagrama del coeficiente de corrección de la carga radial.

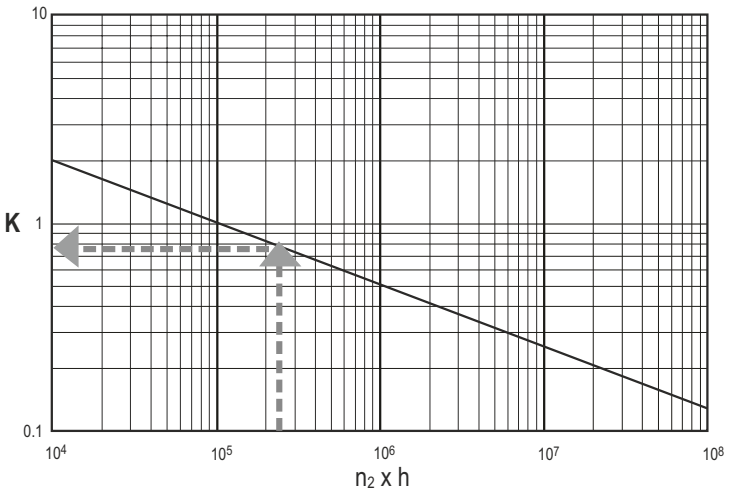

TR TEKNİK BİLGİLER

6. Artık rulman servis ömrü gereksinimlerini karşılayacak olan, bilenen E konumunda kabul edilebilir radyal yük Fr_{nxh} değerini, aşağıdaki formülü kullanarak hesaplayabiliriz.

Giriş veya çıkış şaftının rulman servis ömrünün, uygulanan radyal yük değeri ve yük konumunun bilinerek belirlenmesi

Bilinen parametreler:
- Giriş veya çıkış tipi
  Giriş:
  EL, EML, EM, EP, ET
  Çıkış:
  MS, MC, PS, PC
- Mesafe E [mm]
  (Yük konumunun çıkış şaftı faturasından mesafesi)
- Uygulanan radyal yük [kN]
- Şaft devir sayısı [d/d]

Giriş veya çıkış şaftının rulman servis ömrünün, bilinen parametrelere dayanarak belirlenmesi:

1. Seçilen giriş veya çıkış şaftı için rulmanların servis ömrü grafiğini seçin.
2. Grafiği kullanarak E yük konumundaki radyal yükü (Fr) bulun.
3. Aşağıdaki formülü kullanarak radyal yük düzeltme faktörü K değerini belirleyin.

Fr_{ap} = Uygulanan radyal yük [kN]

4. K faktörünü belirledikten sonra radyal yük düzeltme faktörü grafiğini kullanarak buna karşılık gelen (nxh) değerini bulun.
5. Son olarak, E konumunda uygulanan radyal yüke dayanarak rulman servis ömrünü belirlemek için aşağıdaki formülü uygulayın.

EN TECHNICAL INFORMATION

6. Now you can determine the acceptable radial load Fr_{nxh} at the known position E to meet the bearing service life requirements, applying the following formula:

$$Fr_{nxh} = Fr \times K$$

How to determine the bearing service life of an input or output shaft version knowing the applied radial load and its load position.

Known parameters:
- Input or output version
  Input:
  EL, EML, EM, EP, ET
  Output:
  MS, MC, PS, PC
- Load position E [mm]
  (Distance of the load from the output shaft shoulder)
- Applied radial load [kN]
- Shaft speed [min^{-1}]

To determine the bearing service life to the selected input or output shaft, based on known parameters, follow the steps described below:

1. Select the service life curve of the bearings for the selected input or output shaft.
2. Use the chart to find the radial load (Fr) with reference to the load position E.
3. Determine the radial load correction factor K applying the following formula:

$$K = \frac{Fr_{ap}}{Fr}$$

Fr_{ap} = Applied radial load [kN]

4. Once you have determined the K factor, use the radial load correction factor curve to find the corresponding (nxh) value.
5. Finally, to determine the bearing service life based on the applied radial load and its position E, apply the following formula:

$$h = \frac{n \times h}{n_{1-2}}$$

DE TECHNISCHE EIGENSCHAFTEN

6. Jetzt kann einwandfrei bestimmt werden, welche Radiallast F_{mxh} (auf der Basis des vorgegebenen Abstands E) annehmbar ist, um die geforderte Lebensdauer der Lager garantieren zu konnen:

Wie wird die Lebensdauer der Lager einer Vollwelle in An - oder Abtrieb festgestellt, wenn die Radiallast und der entsprechende Eingriffspunkt vorgegeben sind.

Bekannte Parameter:
- Ausführung
  Antriebswelle:
  EL, EML, EM, EP, ET
  Abtriebswelle:
  MS, MC, PS, PC
- Abstand E [mm] (Abstand des Lasteingriffspunktes vom Wellenansatz)
- Applizierte Radiallast [kN]
- Drehgeschwindigkeit [min^{-1}]

Um die Lebensdauer der Lager der An oder Abtriebswelle auf der Basis der vorgenannten, bekannten Parameter zu bestimmen, ist jetzt gemäss dem folgenden Ablauf vorzugehen:

1. Auswählen der entsprechenden Grafik (Lebensdauer dern Lager an Anoder Abtriebswelle) gemäss gewünschter Ausführung.
2. Den Radiallast - Wert (Fr) feststellen, der mit dem vorgegebenen Abstand E korrespondiert.
3. Den Korrekturkoeffizienten K der Radiallast nach der folgenden Formel bestimmen:

Fr_{ap} = Applizierte Radiallast [kN]

4. Den ermittelten Koeffzienten K der Radiallast in der entsprechenden Darstellung mit dem korrespondierenden Wert nxh in Verbindung setzen.
5. Jetzt kann einwandfrei bestimmt werden, welche Lebensdauer der Lager in Verbindung zur vorgegebenen Radiallast (auf der Basis des vorgegebenen Abstands E) annehmbar ist. Dazu ist die nachfolgende Formel einzusetzen:

IT CARATTERISTICHE TECNICHE

6. Ora potrete definire quale sarà il carico massimo accettabile Fr_{nxh} nella posizione E che garantirà la duratadi vita dei cuscinetti richiesta applicando la seguente formula:

Come determinare la durata di vita richiesta dei cuscinetti di un albero di entrata o di uscita conoscendo il carico radiale applicato e la posizione del carico.

Parametri conosciuti:
- Versione del supporto
  Entrata:
  EL, EML, EM, EP, ET
  Uscita:
  MS, MC, PS, PC
- Distanza E [mm]
  (Distanza del carico dallo spallamento dell'albero)
- Carico radiale applicato [kN]
- Velocità di rotazione dell'albero [min^{-1}]

Per determinare la durata di vita dell'albero di entrata o di uscita scelto, in base ai parametri conosciuti, seguire il seguente procedimento:

1. Selezionare il grafico della durata di vita dei cuscinetti dell'albero di entrata o uscita selezionato.
2. Individuare nel grafico il carico radiale (Fr) riferito alla posizione del carico E.
3. Determinare il fattore di correzione del carico radiale K applicando la seguente formula:

FR CARACTERISTIQUES TECHNIQUES

6. Il est à présent possible de définir la charge maximum acceptable Fr_{nxh} dans la position E connue qui garantira la durée de vie requise des roulements, en appliquant la formule suivante:

$$Fr_{nxh} = Fr \times K$$

Comment déterminer la durée de vie re quise des roulements d'une d'arbre d'entrée ou de sortie en connaissant la charge radiale appliquée et sa position.

Paramétres connus:
- Version du suppor:
  Entrèe
  EL, EML, EM, EP, ET
  Sortie:
  MS, MC, PS, PC
- Distance E [mm] (distance entre la charge et la base de l'arbre)
- Charge radiale appliquée [kN]
- Vitesse de rotation l'arbre [min^{-1}]

Pour déterminer la durée de vie de l'arbre d'entrée ou de sortie choisi, en fonction des paramètres connus, procéder comme suit:

1. Sélectionner le graphique de la durée de vie des roulements de l'arbre d'entrée ou de sortie sélectionné.
2. Trouver dans le graphique la charge radiale (Fr) correspondant à la position de la charge E.
3. Déterminer le facteur de correction de la charge radiale K en appliquant la formule suivante:

$$K = \frac{Fr_{ap}}{Fr}$$

Fr_{ap} = Carico radiale applicato [kN]

4. Una volta determinato il fattore K individuare sul grafico del fattore di correzione del carico radiale il valore di nxh corrispondente.
5. Infine per determinare la durata di vita dei cuscinetti riferito al carico radiale applicato ed alla sua posizione E applicare la seguente formula:

$$h = \frac{n \times h}{n_{1\text{-}2}}$$

ES CARACTERÍSTICAS TÉCNICAS

6. Ahora se podrá definir cuál será la carga máxima aceptable Fr_{nxh} en la posición E que podrá garantizar el tiempo de vida requerido de los rodamientos, aplicando la siguiente fórmula:

Cómo determinar el tiempo de vida útil requerido de los rodamientos de un eje de entrada o de salida conociendo la carga radial aplicada y la posición de la carga.

Parámetros conocidos:
- Versión del soporte
  Entrada:
  EL, EML, EM, EP, ET
  Salida:
  MS, MC, PS, PC
- Distancia E [mm]
  (Distancia entre la carga y la base del eje)
- Carga radial aplicada [kN]
- Velocidad de rotación del eje [min^{-1}]

Para determinar el tiempo de vida útil del eje de entrada o de salida elegido, en base a los parámetros conocidos, seguir el siguiente procedimiento:

1. Seleccionar el gráfico del tiempo de vida útil de los rodamientos del eje de entrada o de salida seleccionado .
2. Localizar en el gráfico la carga radial (Fr) correspondiente a la posición de la carga E.
3. Determinar el factor de corrección de la carga radial K aplicando la siguiente fórmula:

Fr_{ap} = Carga radial aplicada [kN]

4. Después de determinar el factor K localizar en el gráfico del factor de corrección de la carga radial el correspondiente valor de nxh.
5. Por último, determinar el tiempo de vida útil de los rodamientos basándose en la carga radial aplicada y a su posición E utilizando la siguiente fórmula:

TR TEKNİK BİLGİLER

Radyal yük Fra, çıkış şaftında kullanılan aktarma tipine göre aşağıdaki formüller kullanılarak hesaplanabilir.

Elastik kaplin
Elastic coupling
Elastische Kupplung

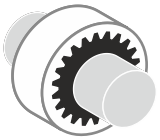

Radyal yük yok
No radial load
Keine Radiallast

Triger kayış
Trigger belt
Zahnriemen

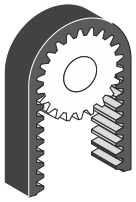

$$Fr_a = \frac{2100.M_2}{D}$$

Fr_a = Çıkış şaftındaki radyal yük [N]
M_2 = Şafttaki moment [Nm]
D = Dişli veya kasnak bölüm dairesi çapı[mm]

EN TECHNICAL INFORMATION

The Fra radial load on the drive's shaft can be calculated with the following formulas according to the type of transmission used.

Düz dişli (Kavrama açısı 20°)
Spur gear (pressure angle 20°)
Zahnräder mit gerader Verzahnung (Druckwinkel 20°)

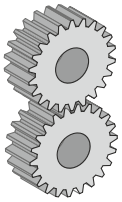

$$Fr_a = \frac{2100.M_2}{D}$$

V kayış
Pulley for V belt
Keilriemen

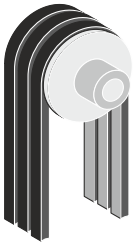

$$Fr_a = \frac{4000.M_2}{D}$$

Fr_a = Radial load on shaft [N]
M_2 = Torque on shaft [Nm]
D = Gear or pulley pitch diameter [mm]

DE TECHNISCHE EIGENSCHAFTEN

Die auf die Getriebewelle e inwirkende Radiallast Fra kann je nach angewandtem Getriebetyp mit folgenden Formeln berechnet werden.

Küçük hızlarda zincir dişli (z < 17)
Chain drives at low speed (z < 17)
Kettengetriebe mit niedriger Geschwindigkeit (z < 17)

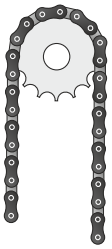

$$Fr_a = \frac{2100.M_2}{D}$$

Gerdirme makaralı kayış
Flat belt with spanning pulley
Flachriemen mit spanner

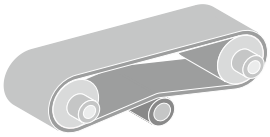

$$Fr_a = \frac{8000.M_2}{D}$$

Fr_a = Radiallast an der Welle [N]
M_2 = Drehmoment an der Welle [Nm]
D = Teilkreisdurchmesser des Zahnrads oder der Riemenscheibe [mm]

PLANET DİŞLİ ÜNİTESİNİN TERMİK GÜCE GÖRE DOĞRULANMASI
Pt [kW]

Planet dişli üniteleri sürekli yük altında 20 d/d'nın üzerindeki devir sayılarında kullanıldığında veya uygulamalar arasında normal ısı yayılımını engelleyecek durmalar ile kullanıldığında, asıl aktarılan gücün ilgili Planet dişli ünitesinin veri sayfası üzerinde belirtilmiş olan güç seviyesini aşmadığından emin olun.

Büyük Planet dişli üniteleri için, her zaman veri sayfasında gösterilen maksimum giriş devri göz önüne alınmalıdır.

VERIFICATION OF THE DRIVE ACCORDING TO THE THERMAL POWER
Pt [kW]

When the drive is used with an output speed greater than 20 min^{-1} under continuous duty or with stops between applications that inhibit normal heat dissipation, make sure that the actual transmitted power does not exceed the power indicated on the data sheet of the individual drive.

For large drives, the maximum input speeds, as always shown on the product's data sheet, must be taken into account.

ÜBERPRÜFUNG DES GETRIEBES AUFGRUND DER THERMISCHEN LEISTUNG
Pt [kW]

Wird das Getriebe im Dauerbetrieb bei Raumtemperatur und mit einer Abtriebsdrehzahl von über 20 min^{-1} ein gesetzt bzw. mit Unterbrechungen zwischen den Einschaltungen, die zu kurz sind, um die normale Wärmeableitung zu gewährleisten, muss kontrolliert werden, dass die tatsächlich übertragene Leistung nicht den Wert überschreitet, der in den jeweiligen Getriebetypen zugeordneten technischen Datenblättern verzeichnet ist.

Bei großen Getrieben können zulässige Höchstwerte für die Eingansgeschwindigkeit vorgeschrieben sein, die generell im technischen Datenblatt des Produkts aufgeführt sind und eingehalten werden müssen.

Bu katalogta yer alan teknik bilgiler Planet dişli ünitelerinin seçilmesi konusunda yardımcı olacak özet bir kılavuz niteliğinde sunulmuştur ve doğru Planet dişli ünitesini seçmekten sorumlu olan kurulumu gerçekleştirecek kişilerin bilgi ve deneyiminin yerini tutmaz.

PGR, müşterileri ile mümkün olabildiğince iş birliği yapabilmek için herhangi bir doğrulamanın yapılabilmesi için kendi teknik destek departmanının hizmetlerini kullanımınıza sunmaktan mutluluk duymaktadır.

The technical information in this catalog is provided as a brief guide for s electing drives and does not substitute the know ledge and experience of the installers who are responsible for selecting the proper drive.

To collaborate as much as possible with its customers, PGR is pleased to offer the services of its technical assistance department to carry out any necessary verifications.

Die im Katalog enthaltenen technischen Informationen sollen eine Hilfe zur möglichst einfachen Auswahl der Getriebe sein. Diese Informationen sollen auf keinen Fall die Kenntnisse und die Erfahrung der Anlagentechniker ersetzen, die zu bestimmen haben, welcher Getriebetyp installiert werden muss.

Für eine optimale Zusammenarbeit steht der Kundenservice von PGR Ihnen für jegliche Überprüfung und Beantwortung sonstiger technischer Fragen zur Verfügung.

IT CARATTERISTICHE TECNICHE

Il carico radiale Fr_a agente sull'albero del riduttore può essere calcolato con le seguenti formule secondo il tipo di trasmissionne adottato.

Giunto elastico
Joint élastique
Unión elástica

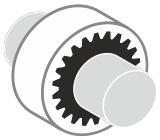

No carico radiale
Aucune charge radiale
No carga radial

Pulegge dentate
Pour courroie dentée
Para correa dentada

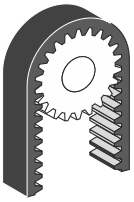

$$Fr_a = \frac{2100.M_2}{D}$$

Fr_a = Carico radiale risultante sull'albero [N]
M_2 = Momento torcente sull'albero [Nm]
D = Diametro primitivo ingranaggio o puleggia [mm]

FR CARACTERISTIQUES TECHNIQUES

La charge radiale Fr_a qui agit sur l'arbre du réducteur peut être calculée par le biais des formules ci-dessous selon le type de transmission adopté.

Ingranaggi a denti diritti (angolo pressione 20°)
Engrenages à dents droites (angle pression 20°)
Engranajes de dientes rectos (ângulo presión 20°)

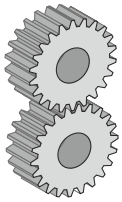

$$Fr_a = \frac{2100.M_2}{D}$$

Pulegge a gole V
Pour courroie trapézoïdale
Para correa trapezoidal

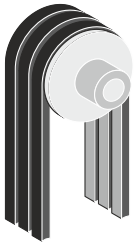

$$Fr_a = \frac{4000.M_2}{D}$$

Fr_a = Charge radiale exercée sur l'arbre [N]
M_2 = Moment de torsion sur l'arbre [Nm]
D = Diamètre primitif engrenage ou poulie [mm]

ES CARACTERÍSTICAS TÉCNICAS

La carga radial Fr_a que actúa sobre el eje del reductor se puede calcular con las siguientes fórmulas según el tipo de transmisión utilizado.

Catene a bassa velocità (z < 17)
Pour réducteur à chaîne à basse vitesse (z < 17)
Para reductor cadena a baja velocidad (z < 17)

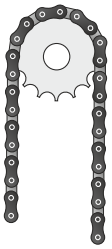

$$Fr_a = \frac{2100.M_2}{D}$$

Cinghia piana con tenditore
Courroie plate avec tendeur
Correa plana con tensor

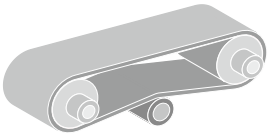

$$Fr_a = \frac{8000.M_2}{D}$$

Fr_a = Carga radial resultante sobre el eje [N]
M_2 = Momento de torsión sobre el eje [Nm]
D = Diámetro primitivo engranaje o polea [mm]

VERIFICA DEL RIDUTTORE IN FUNZIONE DELLA POTENZA TERMICA
Pt [kW]

Nel caso in cui il riduttore sia utilizzato a velocità di uscita superiore a 20 min^{-1} ed in servizio continuo, o comunque abbia soste tra una inserzione e l'altra tali da non consentire il normale smaltimento del calore, è necessario verificare che la potenza effettivamente trasmessa non superi quella indicata nella scheda tecnica relativa al singolo tipo di riduttore.

Per i riduttori di grosse dimensioni vi possono essere limitazioni alla velocità max in entrata, di cuisi deve tenere conto e che sono indicate sempre nella scheda tecnica del prodotto.

CONTRÔLE DU RÉDUCTEUR EN FONCTION DE LA PUISSANCE THERMIQUE
Pt [kW]

Dans le cas où le réducteur serait utilisé à une vitesse de sortie supérieure à 20 min^{-1} et en service continu, ou bien que les arrêts de fonctionnement entre un enclenchement et l'autre ne seraient pas suffisamment longs pour permettre la dissipation normale de la chaleur, il est nécessaire de s'assurer que la puissance effectivement transmise ne dépasse pas celle indiquée sur la fiche technique du réducteur.

En ce qui concerne les réducteurs de grandes dimensions, peuvent exister des limitations à la vitesse maximum en entrée, limitations dont il est nécessaire de tenir compte et qui sont indiquées sur la fiche technique du produit

VERIFICACIÓN DEL REDUCTOR SEGÚN LA POTENCIA TÉRMICA
Pt [kW]

Cuando se utilice el reductor con una velocidad de salida superior a 20 min^{-1} y con servicio continuo o de todas maneras con paradas entre una activación y otra tales que no permitan una disipación normal del calor, será necesario comprobar que la potencia efectivamente transmitida no supere aquella indicada en la respectiva ficha técnica del reductor.

Para los reductores de grandes dimensiones puede haber unas limitaciones de la velocidad máx. de entrada, habrá que tener en cuenta dichas limitaciones que siempre vienen indicadas en la ficha técnica del producto.

Le informazioni tecniche contenute nel presente catalogo intendono essere una rapida guida alla scelta dei riduttori e non vogliono in nessun caso sostituirsi alle conoscenze ed all'esperienza dei tecnici impiantisti cui spetta il compito di determinare i riduttori da installare.

Nello spirito della migliore collaborazione con i clienti, la PGR è lieta di mettere a disposizione il proprio servizio tecnico per le verifiche che si rendano necessarie.

Les informations techniques figurant dans le présent catalogue constituent une aide dans le choix des réducteurs et ne sauraient se substituer aux connaissances ni à l'expérience des techniciens d'installation auxquels ils incombe d'établir le type de réducteur à installer.

Dans une optique de collaboration efficace avec les clients, PGR met à la disposition de ceux-ci ses propres services techniques pour tout contrôle éventuellement nécessaire.

Las informaciones técnicas contenidas en este catálogo sirven como guia rápida para la elección de los reductores y en ningún caso se proponen sustituir los conocimientos y la experiencia de los técnicos en instalaciones que tienen la tarea de seleccionar los reductores a instalar.

Queriendo siempre colaborar con los clientes, PGR pone con mucho gusto a disposición su propio Servicio Técnico para efectuar las comprobaciones que fueran necesarias.

TR TEKNİK BİLGİLER

YÜK SINIFLANDIRMASI

Listelenmiş yük koşulları, planet dişli ünitesinin gerçek çalışma şartlarına bağlı olarak değişebilir.

Yük Tipleri:
U = Uniform yük
M = Orta yük
H = Ağır yük

EN TECHNICAL INFORMATION

LOAD CLASSIFICATION

Listed load conditions may change depending on drive actual operating conditions.

Legend:
U = Uniform load
M = Moderate load
H = Heavy load

DE TECHNISCHE EIGENSCHAFTEN

BELASTUNGSKENNWERT

Die Änderung des erforderlichen Belastungkennwertes kann ggf. nach Angabe der genauen Betriebsbedingungen erfolgen.

Legende:
U = gleichmässige Belastung
M = mittlere Belastung
H = schwere Belastung

Tablo 3 / Table 3 / Tabelle 3

Havalandırma Sistemleri, Vantilatörler	Blowers, ventilators	Gebläse, Förderer			
Havalandırmalar (radyal ve eksenel)	Blowers (axial and radial)	Gebläse	U		
Soğutma kulesi fanları	Cooling tower fans	Kühlturmlüfter		M	
Cebri çekişli fanlar	Induced draught fans	Saugzuggebläse		M	
Döner pistonlu fanlar	Rotary piston blowers	Drehkolbengebläse		M	
Turbo fanlar	Turbo blowers	Turbogebläse	U		
Kimya Endüstrisi	**Chemical industry**	**Chemische industrie**			
Karıştırıcılar (Sıvı materyal)	Agitators (liquid material)	Rühwerke (leichte Flüssigkeit)	U		
Karıştırıcılar (Yarı sıvı materyal)	Agitators (semi-liquid material)	Rührwerke		M	
Santrifüj (Ağır)	Centrifuges (heavy)	Zentrifugen (schwer)		M	
Santrifüj (Hafif)	Centrifuges (light)	Zentrifugen (leicht)	U		
Soğutucu tamburlar	Cooling drums	Kühltrommel		M	
Kurutma tamburları	Drying drums	Trockentrommel		M	
Mikserler	Mixers	Mischer		M	
Kompresörler	**Compressors**	**Verdichter, Kompressoren**			
Pistonlu kompresörler	Piston compressors	Kolbenkompressoren			H
Turbo kompresörler	Turbo compressors	Turbokompressoren		M	
Konveyörler	**Conveyors**	**Förderanlagen**			
Levhalı konveyörler	Apron conveyors	Plattenbänder		M	
Dengeleyici elevatörler	Ballast elevators	Hebewerk		M	
Bantlı cepli konveyörler	Band pocket conveyors	Gurttaschenbecherwerke		M	
Bantlı konveyörler (dökme malzeme)	Belt conveyors (bulk material)	Fördermaschinen (Schüttgut)		M	
Bantlı konveyörler (parçalı yük)	Belt conveyors (piece goods)	Fördermaschinen (Stückgut)			H
Kovalı konveyörler	Bucket conveyors for flour	Mehlbecherwerke	U		
Zincirli konveyörler	Chain conveyors	Kettenfoerderanlagen		M	
Dairesel konveyörler	Circular conveyors	Kreisförderer		M	
Vinçler	Hoists	Lastaufzüge			H
Eğimli vinçler	Inclined hoists	Schrägaufzüge			H
Çelik bantlı konveyörler	Steel belt conveyors	Stahlbandförderer		M	
İnsan asansörleri	Passenger lifts	Personenautzüge		M	
Helezon taşıyıcılar	Screw conveyors	Schneckenförderer		M	
Oluklu-zincirli konveyörler	Trough chain conveyors	Trogkettenförderer		M	
Taşıma vinçleri	Winches hauling	Förderwinden		M	
Vinçler	**Cranes**	**Bagger, Kräne**			
Dikme pergel vinç	Derricking jib gear	Bohrvorrichtung		M	
Dişli kaldırma	Hoist gear	Hebewerke	U		
Döner dişli	Slewing gear	Schwenkwerke		M	
Gezici dişli	Travelling gear	Fahrwerke			H
Tarama Makinaları	**Dredgers**	**Begger**			
Kovalı konveyörler	Bucket conveyors	Eimerkettenbagger			H
Tekerlekli kepçeler	Bucket wheels	Schaufelräder			H
Kesme kafası	Cutter heads	Schneidköpfe			H
Manevra vinçleri	Manoeuvring winches	Manövrierwinden		M	
Pompalar	Pumps	Saugpumpen		M	
Döner dişli	Slewing gear	Schwenkwerke		M	
Gezici dişli (Tırtıl)	Travelling gear (caterpillar)	Fahrwerke (Raupe)			H
Gezici dişli (Raylı)	Travelling gear (rails)	Fahrwerke (Schiene)		M	

IT CARATTERISTICHE TECNICHE

CONDIZIONI DI CARICO

Le condizioni di carico qui elencate possono subire variazioni in funzione delle reali condizioni di funzionamento dei riduttori.

Legenda:
U = Carico uniforme
M = Carico moderato
H = Carico pesante

FR CARACTERISTIQUES TECHNIQUES

CONDITIONS DE CHARGE

Les conditions de charge indiquées peuvent varier en fonction des conditions de fonctionnement réelles des réducteurs.

Légendes:
U = Charge uniforme
M = Charge modérée
H = Charge lourde

ES CARACTERÍSTICAS TÉCNICAS

CONDICIONES DE LA CARGA

Las condiciones de la carga ilustradas pueden variar según las reales condiciones de funcionamiento de los reductores.

Leyenda:
U = Carga uniforme
M = Carga moderada
H = Carga pesada

Tabella 3 / Tableau 3 / Tabla 3

Compressori, ventilatori	**Compresseurs, ventilateurs**	**Compresores, ventiladores**			
Compressori (assiali e radiali)	Compresseurs (axiaux et radiaux)	Compresores (axiales y radiales)	U		
Ventilatori a torre di raffredamento	Ventilateurs à tour de réfrigération	Ventiladores de torre de enfriamiento		M	
Ventilatori a tiraggio indotto	Ventilateurs à tirage induit	Ventiladores de tiro inducido		M	
Compressori a pistoni rotanti	Compresseurs à pistons rotatifs	Compresores con pistones giratorios		M	
Compressoriturbo	Turbocompresseurs	Turbocompresores	U		
Industria chimica	**Industrie chimique**	**Industria química**			
Agitatori (materiali liquidi)	Agitateurs (pour produits liquides)	Agitadores (materiales líquidos)	U		
Agitatori (materiali semi-liquidi)	Agitateurs (pour produits semi-liquides)	Agitadores (materiales semi-líquidos)		M	
Centrifughe (pesanti)	Centrifugeuses (lourdes)	Centrifugadoras (pesadas)		M	
Centrifughe (leggere)	Centrifugeuses (légères)	Centrifugadoras (livianas)	U		
Tamburi di raffreddamento	Tambours refroidisseurs	Tambores de enfriamiento		M	
Tamburi di essicazione	Tambours de séchage	Tambores de secado		M	
Miscelatori	Mélangeurs	Mezcladores		M	
Compressori	**Compresseurs**	**Compresores**			
Compressori a pistone	Compresseurs à piston	Compresores de pistón			H
Compressori turbo	Turbocompresseurs	Turbocompresores		M	
Convogliatori	**Convoyeurs**	**Transportadores**			
Nastro trasportatore a piastre	Tapis transporteurs à plaques	Cintas transportadoras de placas		M	
Sollevatori zavorra	Elévateurs de leste	Elevadores de lastre		M	
Convogliatori nastro a sacca	Convoyeurs tapis à poches	Transportadores de cinta con funda		M	
Convogliatori a nastro (materie voluminose)	Transporteurs à bandes (matériel volumineux)	Transportadores de cinta (material suelto)		M	
Convogliatori (merce a pezzi)	Transporteurs à bandes (pièces détachées)	Transportadores (mercadería en piezas)			H
Convogliatori a tazza per farinacei	Convoyeurs à godets pour farine	Transportadores de cangilones para harinas	U		
Convogliatori a catena	Convoyeurs à chaînes	Transportadores de cadena		M	
Convogliatori circolari	Convoyeurs circulaires	Transportadores circulares		M	
Montacarichi	Monte-charge	Montacargas			H
Montacarichi inclinati	Monte-charge inclinés	Montacargas inclinados			H
Convogliatore a nastro d'acciaio	Convoyeurs à tapis en acier	Transportadores de cinta de acero		M	
Sollevatori per persone	Ascenseurs	Ascensores para personas		M	
Trasportatori a coclea	Transporteurs à vis sans fin	Trasportadores de tornillo		M	
Trasportatore a nastro concavo	Transporteur à tapis concave	Trasportadores de cinta cóncava		M	
Trasportatore a verricello	Transporteurs à treuil	Trasportador con guinche		M	
Gru	**Grues**	**Grúas**			
Meccanismo del braccio di trivellazione	Mécanisme du bras de forage	Mecanismo del brazo de perforación		M	
Meccanismo di montacarico	Mécanisme de montecharges	Mecanismo del montacargas	U		
Meccanismo girevole	Mécanisme de rotation	Mecanismo giratorio		M	
Meccanismo di traslazione	Mécanisme de translation	Mecanismo de traslado			H
Draghe	**Dragues**	**Dragas**			
Convogliatori a tazza	Convoyeurs à godets	Transportadores de cangilones			H
Ruote a tazza	Roues à godets	Ruedas de cangilones			H
Teste portautensili	Têtes porte-outils	Cabezales portaherramientas			H
Verricelli per manovre	Treuils de manoeuvre	Guinches para maniobras		M	
Pompe	Pompes	Bombas		M	
Meccanismo girevole	Mécanismes de rotation	Mecanismo giratorio		M	
Meccanismo di traslazione (mezzo cingolato)	Mécanismes de translation (véhicule chenillé)	Mecanismo de traslación (vehículo de orugas)			H
Meccanismo di traslazione (rotaie)	Mécanismes de translation (rails)	Mecanismo de traslación (vehículo sobre rieles)		M	

TR TEKNİK BİLGİLER

YÜK SINIFLANDIRMASI

Listelenmiş yük koşulları, planet dişli ünitesinin gerçek çalışma şartlarına bağlı olarak değişebilir.

Yük Tipleri:
U = Uniform yük
M = Orta yük
H = Ağır yük

EN TECHNICAL INFORMATION

LOAD CLASSIFICATION

Listed load conditions may change depending on drive actual operating conditions.

Legend:
U = Uniform load
M = Moderate load
H = Heavy load

DE TECHNISCHE EIGENSCHAFTEN

BELASTUNGSKENNWERT

Die Änderung des erforderlichen Belastungkennwertes kann ggf. nach Angabe der genauen Betriebsbedingungen erfolgen.

Legende:
U = gleichmässige Belastung
M = mittlere Belastung
H = schwere Belastung

Tablo 3 / Table 3 / Tabelle 3

Gıda Endüstri Makinaları	Food industry machinery	Nahrungsmittelmaschinen			
Şişeleme ve konteyner dolum makinaları	Bottling and container filling machines	Abfüllmaschinen	U		
Şeker kamışı kırıcıları	Cane crushers	Zuckerrohrbecher		M	
Şeker kamışı bıçakları	Cane knives	Zuckerrohrschneider			H
Şeker kamışı değirmenleri	Cane mills	Zuckerrohrmühlen		M	
Yoğurma makinaları	Kneading machines	Knetmaschinen		M	
Püre küvetleri (kristalizatör)	Mash tubs (crystallizers)	Maischen			H
Paketleme makinaları	Packaging machines	Verpackungsmaschinen	U		
Şeker pancarı kırıcıları	Sugar beet cutters	Zuckerrübenschneider		M	
Şeker pancarı yıkama makinaları	Sugar beet washing machines	Zuckerrübenwäscher		M	
İnşaat Makinaları	**Building machinery**	**Baumaschinen**			
				M	
Vinçler	Hoists	Bauaufzüge		M	
Yol yapım makinaları	Road construction machinery	Strassenbaumaschinen		M	
Jeneratörler, Trafolar	**Generators, transformers**	**Generatoren, Umformer**			
Frekans trafoları	Frequency transformers	Frequenzumformer			H
Jeneratörler	Generators	Generatoren			H
Kaynak jeneratörleri	Welding generators	Schweissgeneratoren			H
Çamaşırhaneler	**Laundries**	**Wäschereimaschinen**			
Tamburlar	Tumblers	Trommeltrockner		M	
Çamaşır makinaları	Washing machines	Waschmaschinen		M	
Ütü makinaları	Pressing machines	Bügelmaschinen		M	
Haddehaneler	**Metal rolling mills**	**Walzwerke**			
Kütük makasları	Billet shears	Blechsheren			H
Zincirli transferler	Chain transfres	Kettenschlepper		M	
Soğuk haddehaneler	Cold rolling mills	Kaltwalzwerke			H
Sürekli döküm tesisleri	Continuous casting plant	Stranggussanlagen			H
Soğutma ızgaraları	Cooling beds	Kühlbetten		M	
Kırpma makasları	Cropping shears	Schopfscheren			H
Ağır ve orta levha haddehaneleri	Heavy and medium plate mills	Plattenwalz-werk			H
Tufal giderme makinaları	Descaling machines	Blocktransportanlagen			H
Manüplatörler	Manipulators	Verschiebevomchtungen			H
Tomruk iticiler	Ingot pushers	Blechpressen			H
Plaka deviricileri	Plate tilters	Rollenrichtmaschinen		M	
Merdaneli masalar	Roller tables (heavy)	Rollgänge (schwer)			H
Meradaneli masalar	Roller tables (light)	Rollgänge (leicht)			H
Boru kaynak makinaları	Tube welding machines	Rohrschweissmaschinen		M	
Sarma makinaları (şerit ve tel)	Winding machines (strip and wire)	Wickler		M	
Tel çekme tezgahları	Wire drawing banches	Drahtzüge		M	
Metal İşleme Makinaları	**Metal working machines**	**Metallbearbeitungsmaschinen**			
Grup miller, transmisyon milleri	Contershafts, line shafts	Vorgelege	U		
Dövme tezgahları	Forging presses	Schmiedepressen			H
Çekiçler	Hammers	Hämmer			H
Yardımcı sürücü tezgahları	Auxiliary drives, machine tools	Werkzeugmaschinen Hilfsantriebe	U		
Ana tahrik tezgahları	Main drives, machine tools	Werkzeugmaschinen Hauptantriebe		M	
Metal planya makinaları	Metal planing machines	Hobelmaschinen			H
Plaka doğrultma makinaları	Plate straightening machines	Blechrichtmaschinen			H
Presler	Presses	Pressen			H
Zımba presleri	Punch presses	Stanzen			H
Makaslar	Shears	Scheren		M	
Saç bükme makinaları	Sheet metal bending machines	Blechbiegemaschinen		M	

IT CARATTERISTICHE TECNICHE

CONDIZIONI DI CARICO

Le condizioni di carico qui elencate possono subire variazioni in funzione delle reali condizioni di funzionamento dei riduttori.

Legenda:
U = Carico uniforme
M = Carico moderato
H = Carico pesante

FR CARACTERISTIQUES TECHNIQUES

CONDITIONS DE CHARGE

Les conditions de charge indiquées peuvent varier en fonction des conditions de fonctionnement réelles des réducteurs.

Légendes:
U = Charge uniforme
M = Charge modérée
H = Charge lourde

ES CARACTERÍSTICAS TÉCNICAS

CONDICIONES DE LA CARGA

Las condiciones de la carga ilustradas pueden variar según las reales condiciones de funcionamiento de los reductores.

Leyenda:
U = Carga uniforme
M = Carga moderada
H = Carga pesada

Tabella 3 / Tableau 3 / Tabla 3

Macchinari per industria alimentare	Machines pour l'industrie alimentaire	Máquinas para la industria alimenticia			
Macchine per il riempimento di bottiglie e contenitori	Machines pour le remplissage bouteilles et conteneurs	Máquinas para llenar botellas y recipientes	U		
Frantumatori di canna	Broyeurs de joncs	Trituradores de caña		M	
Coltelli per canna	Lames pour joncs	Cuchillos para caña			H
Macina per canna	Moulins de joncs	Muelas para caña		M	
Impastatrice	Pétrisseuse	Empastadoras		M	
Vasche per macerazione (cristallizzanti)	Cuves de macération (cristallisantes)	Depósitos para maceración (cristalizadores)			H
Macchinari per imballaggio	Machines d'emballage	Máquinas para embalaje	U		
Taglierine per barbabietole da zucchero	Coupeuses pour betteraves à sucre	Cuchillas para remolacha azucarera		M	
Macchine per il lavaggio di barbabietole da zucchero	Machines pour le lavage de betteraves à sucre	Máquinas para lavar la remolacha azucarera		M	
Macchinari per costruzione	**Machines de construction**	**Máquinas para la construcción**			
Betoniere	Bétonnières	Hormigoneras		M	
Montacarichi	Monte-charge	Montacargas		M	
Macchinari per costruzione strade	Machines pour la construction de routes	Máquinas para la construcción vial		M	
Generatori e trasformatori	**Générateurs et transformateurs**	**Generadores y transformadores**			
Trasformatori di frequenza	Transformateurs de fréquence	Transformadores de frecuencia			H
Generatori	Générateurs	Generadores			H
Generatori per saldatrici	Générateurs pour machines à souder	Generadores para soldadoras			H
Lavanderie	**Laveries**	**Lavanderías**			
Invertitori	Inverseurs	Invertidores		M	
Lavatrici	Machines à laver	Lavadoras		M	
Stiratrici	Machines à repasser	Planchadoras		M	
Laminatori per metalli	**Laminoirs a métaux**	**Laminadores para metales**			
Cesoie per laminatoi	Cisailles pour laminoirs	Cizallas para laminadores			H
Trasmissioni a catena	Transmissions à chaîne	Transmisiones de cadena		M	
Laminatoi a freddo	Laminoirs à froid	Laminadores en frío			H
Impianti per fusione continua	Installations de fusion continue	Instalaciones para fundición continua			H
Basamenti refrigeranti	Bases de réfrigération	Bases de refrigeración		M	
Cesoie per spuntatura	Cisailles à ébouter	Cizallas para despunte			H
Laminatoi per piatti medi e pesanti	Laminoirs pour plats moyens et lourds	Laminadores para platos medios y pesados			H
Treni sbozzatori e lingotti	Trains ébaucheurs et lingots	Trenes desbastadores y lingotes			H
Manipolatori	Manipulateurs	Manipuladores			H
Trancia lamiere	Coupe-tôles	Cizallas de planchas			H
Raddrizzatore rulli	Machnies à dresser les rouleaux	Máquinas enderezadoras de rodillos		M	
Tavole a rulli (pesante)	Tables à rouleaux (lourdes)	Mesas de rodillos (pesadas)			H
Tavole a rulli (leggere)	Tables à rouleaux (légères)	Mesas de rodillos (livianas)			H
Macchine saldatrici a tubo	Machines à souder les tubes	Maquinas para soldar		M	
Macchine avvolgitrici (guarnizioni e fili)	Enrouleuses (garnitures et fils)	Máquinas bobinadoras (flejes e hilos)		M	
Banchi da disegno a filo	Bancs traceurs à fil	Bancos de diseño a hilo		M	
Macchine per la lavorazione del metallo	**Machnies d'usinage des métaux**	**Máquinas para la elaboración del metal**			
Contralberi, alberi in linea	Contre-arbres, arbres en ligne	Contraejes, ejes en linea	U		
Pressa per stampaggio a caldo	Presses à mouler à chaud	Prensa para estampado en caliente			H
Martelli	Marteaux	Martillos			H
Guide ausiliarie, macchine utensili	Glissières auxiliaires, machines outils	Guías auxiliares, máquinas herramientas	U		
Guide principali, macchine utensili	Glissières principales, machines outils	Guías principales, máquinas herramientas		M	
Macchine per la piallatura di metalli	Raboteuses à métaux	Máquinas para el cepillado de metales			H
Raddrizzatrice per la lamiera	Machines à dresser les tôles	Máquinas enderezadoras de chapa			H
Presse	Presses	Prensas			H
Presse per stampi	Presses à estamper	Prensas para punzunado			H
Cesoie	Cisailles	Cizallas		M	
Macchine per piegatrici di metallo	Plieuses à métaux	Máquinas para plegado de metal		M	

TR TEKNİK BİLGİLER

YÜK SINIFLANDIRMASI

Listelenmiş yük koşulları, planet dişli ünitesinin gerçek çalışma şartlarına bağlı olarak değişebilir.

Yük Tipleri:
U = Uniform yük
M = Orta yük
H = Ağır yük

EN TECHNICAL INFORMATION

LOAD CLASSIFICATION

Listed load conditions may change depending on drive actual operating conditions.

Legend:
U = Uniform load
M = Moderate load
H = Heavy load

DE TECHNISCHE EIGENSCHAFTEN

BELASTUNGSKENNWERT

Die Änderung des erforderlichen Belastungkennwertes kann ggf. nach Angabe der genauen Betriebsbedingungen erfolgen.

Legende:
U = gleichmässige Belastung
M = mittlere Belastung
H = schwere Belastung

Tablo 3 / Table 3 / Tabelle 3

Petrol Endüstrisi	**Oil industry**	**Ölindustrie**			
Boru hattı pompaları	Pipeline pumps	Pompes pour pipeline		M	
Döner sondaj ekipmanları	Rotary drilling equipment	Bohrvorrichtungen			H
Kağıt Makinaları	**Paper machines**	**Papiermaschinen**			
Perdah makinaları	Calenders	Kalander			H
Gauç valisleri	Couches	Gautschen			H
Kurutucu silindirler	Drying cylinders	Trockenzylinder			H
Parlatma silindirleri	Glazing cylinders	Glättzylinder			H
Hamurlaştırıcılar	Pulpers	Holländer			H
Kağıt hamur değirmenleri	Pulp grinders	Holzschleifer			H
Emici valsler	Suction rolls	Saugwalzen			H
Emici presler	Suction presses	Saugpressen			H
Islak presler	Wet presses	Nasspressen			H
Hallaç makinaları	Willows	Reisswolf			H
Plastik Endüstri Makinaları	**Plastic industry machinery**	**Kunstoffmaschinen**			
Perdah makinaları	Calenders	Kalander		M	
Kırıcılar	Crushers	Zerkleinerungsmaschinen		M	
Ekstruderler	Extruders	Extruder		M	
Karıştırıcılar	Mixers	Mischer		M	
Pompalar	**Pumps**	Kreiselpumpen (zähe **Pumpen**			
Santrifüj pompalar (hafif sıvılar)	Centrifugal pumps (light liquids)	Kreiselpumpen (zähe Flüssigkeit)	U		
Santrifüj pompalar (akışmaz sıvı)	Centrifugal pumps (viscous liquids)	Kreiselpumpen (leichte Flüssigkeit)			H
Pistonlu pompalar	Piston pumps	Kolbenpumpen			H
Dalgıç pompalar	Plunger pumps	Plungerpumpen			H
Basınç pompaları	Pressure pumps	Presspumpen			H
Kauçuk Makinaları	**Rubber machinery**	**Gummimaschinen**			
Perdah makinaları	Calenders	Kalander		M	
Ekstruderler	Extruders	Extruder			H
Karıştırıcılar	Mixers	Mischer		M	
Yoğurma değirmenleri	Pug mills	Knetwerke			H
Haddehaneler	Rolling mills	Walzwerke			H
Taş ve Kil İşleme Makinaları	**Stone and clay working machines**	**Steine, Erden**			
Çekiçli değirmenler	Hammer mills	Hammermühlen			H
Dövücü değirmenler	Beater mills	Walzwerk			H
Kırıcılar	Breakers	Brecher			H
Tuğla presleri	Brick presses	Ziegelpressen			H
Döner fırınlar	Rotary ovens	Drehöfen			H
Boru profil makinaları	Tube mills	Rohrmühlen			H
Tekstil Makinaları	**Textile machines**	**Textilmaschinen**			
Harman ölçerler	Batchers	Dosierer		M	
Dokuma tezgahları	Looms	Webstühle		M	
Yazma ve boyama makinaları	Printing and dyeing machines	Druckerei-Färbereimaschinen		M	
Tabaklama fıçıları	Tanning vats	Gerbwanne		M	
Hallaç makinaları	Willows	Reisswolf		M	
Su Arıtma	**Water treatment**	**Wasseraufbereitung**			
Havalandırıcılar	Aerators	Kreiselbelüfter		M	
Vidalı pompalar	Screw pumps	Wasserschnecken		M	
Ağaç İşleme Makinaları	**Wood working machines**	**Holzbearbeitungsmaschinen**			
Kabuk soyucular	Barkers	Sägegatter			H
Planya tezgahları	Planing machines	Hobelmaschinen		M	
Kollu testereler	Saw frames	Entrindungstrommel			H
Ağaç işleme makinaları	Wood working machines	Holzbearbeitungsmaschinen	U		

IT CARATTERISTICHE TECNICHE

CONDIZIONI DI CARICO

Le condizioni di carico qui elencate possono subire variazioni in funzione delle reali condizioni di funzionamento dei riduttori.

Legenda:
U = Carico uniforme
M = Carico moderato
H = Carico pesante

FR CARACTERISTIQUES TECHNIQUES

CONDITIONS DE CHARGE

Les conditions de charge indiquées peuvent varier en fonction des conditions de fonctionnement réelles des réducteurs.

Légendes:
U = Charge uniforme
M = Charge modérée
H = Charge lourde

ES CARACTERÍSTICAS TÉCNICAS

CONDICIONES DE LA CARGA

Las condiciones de la carga ilustradas pueden variar según las reales condiciones de funcionamiento de los reductores.

Leyenda:
U = Carga uniforme
M = Carga moderada
H = Carga pesada

Tablo 3 / Table 3 / Tabelle 3

Industria petrolifera	**Industrie pétrolifère**	**Industria del petróleo**			
Pompe conduttrici	Pompes pour pipeline	Bombas conductoras		M	
Attrezzatura trapanatrice rotante	Équipement de forage rotatif	Equipos perforado rotativo			H
Macchine per la carta	**Industrie papetière**	**Máquinas para el papel**			
Calandre	Calandres	Calandras			H
Manicotto	Fourreaux	Manguitos			H
Tamburo essicatore	Tambours de séchoir	Tambores de secado			H
Cilindro essicatore	Cylindres de séchoir	Cilindros de secado			H
Raffinatrice	Raffineurs	Refinadoras			H
Sfibratore per pasta	Défibreurs de pâte	Desfibrador de pasta			H
Rulli aspiranti	Rouleaux aspirants	Rodillos aspiradores			H
Presse aspiranti	Presses aspirantes	Prensas aspiradoras			H
Presse a umido	Presses humides	Prensas en húmedo			H
Battitoi	Battoirs	Batidores			H
Macchinari per la plastica	**Machines pour matières plastiques**	**Máquinas para el plástico**			
Calandre	Calandres	Calandras		M	
Frantoi	Broyeurs	Trituradores		M	
Estrusori	Extrudeuses	Extrusores		M	
Miscelatori	Mélangeurs	Mezcladores		M	
Pompe	**Pompes**	**Bombas**			
Pompa centrifuga (liquidi leggeri)	Pompes centrifuges (liquides légers)	Bombas centrifugadoras (líguidos livianos)	U		
Pompa centrifuga (liquidi viscosi)	Pompe centrifuges (liquides visqueux)	Bombas centrifugadoras (líguidos viscosos)			H
Pompe a pistoni	Pompes à pistons	Bombas de pistón			H
Pompe a pulsante	Pompes à poussoir	Bombas de émbolo			H
Pompe a pressione	Pompes à pression	Bombas de presión			H
Macchinari per la gomma	**Machines pour le caoutchouc**	**Máquinas para la goma**			
Calandre	Calandres	Calandras		M	
Estrusori	Extrudeuses	Extrusores			H
Miscelatori	Mélangeurs	Mezcladores		M	
Impastatrice	Malaxeur	Empastadoras			H
Laminatoi	Laminoirs	Laminadores			H
Macchine per la lavorazione della pietra e dell'argilla	**Machines pour le travail de la pierre et de l'argile**	**Máquinas para la elaboración de la piedra y de la arcilla**			
Mulino a martelli	Moulins à marteux	Molinos de martillo			H
Laminatoi per raffinare	Laminoirs à raffiner	Laminadores para refinar			H
Interruttore	Interrupteurs	Interruptores			H
Presse per mattoni	Presses à briques	Prensas para ladrillos			H
Forno rotante	Fours rotatifs	Hornos rotativos			H
Laminatoi a tubo	Laminoirs à tubes	Laminadores de tubo			H
Macchine tessili	**Machines pour l'industrie textile**	**Máquinas textiles**			
Dosatori	Doseurs	Dosificadores		M	
Telai per tessitura	Métiers à tisser	Máquinas para tejido		M	
Macchine per la stampa e la tintura	Machines pour l'impression et la teinture	Máquinas para imprimir y teñir		M	
Vasca per la concia	Cuves de tannage	Depósitos para curtiembre		M	
Battitoi	Battoirs	Batidores		M	
Trattamenti ad acqua	**Traitement des eaux**	**Tratamientos con agua**			
Aeratori	Aérateurs	Aireadores		M	
Pompa a vite	Pompes à vis	Bombas de tornillo		M	
Macchine per la lavorazione del legno	**Machines a travailler le bois**	**Máquinas para la elaboración de la madera**			
Scortecciatrici	Machines à décortiquer	Descortezadoras			H
Macchine per la piallatura	Raboteuses	Máquinas para el cepillado		M	
Telaio per seghe	Métiers à scies	Marcos para sierras			H
Macchine per la lavorazione del legno	Machines à bois	Máquinas para la elaboración de la madera	U		

TR GENEL MONTAJ VE BAKIM TALİMATI

Uzun ve verimli bir servis ömrü elde etmek için Planet dişli üniteleri uygulama yerine doğru şekilde monte edilmelidir. Dolayısı ile yapının bütün yüzeyleri düz ve Planet dişli ünitesinin eksenine dik olabilmeleri için H8 kılavuzlar ile işlenmelidir.

Planet dişli ünitesini sabitlemek için ürün teknik sayfalarında yer alan her bir teknik çizimin altında gösterilen somun ve civataları kullanınız. Flanşların üzerinde yer alan bütün bağlantı deliklerini kullandığınızdan emin olunuz.

Açık hava kurulumları için Planet dişli üniteleri kötü hava koşullarına karşı korunmalıdır, paslanmaya karşı etkili maddeler ve su geçirmeyen gres ile korunmuş yağ keçeleri kullanılmalıdır.

Kazara gerçekleşen aşırı yüklemeler sonucunda aktarımda arızalanmaların meydana gelebileceği uygulamalarda, Planet dişli ünitesini korumak için mekanik veya hidrolik bir güvenlik tertibatı kullanılması gerekmektedir.

Planet dişli üniteleri kurulumdan sonra hasara sebep olabilecek özel durumlar olması halinde çoğunlukla elektrik veya hidrolik motorlara, flanşlar aracılığı ile direkt olarak bağlanmaktadır.

Bu düşünce ile ağır motorların kurulumu söz konusu olduğunda (100 kg'dan daha ağır motorlar), doğru montaj pozisyonunun değerlendirilebilmesi için lütfen Teknik Departmanımız ile iletişime geçiniz.

Alternatif olarak, iki üniteyi ayrı ayrı monte etmenizi ve bir kaplin veya kasnaklar aracılığı ile birbirlerine bağlamanızı tavsiye ederiz.

MAKİNENİN BERTARAFI

Makinenin imha edilmesinden kaynaklı olarak açığa çıkacak olan atıkların elden çıkartılması çevreyi düşünerek gerçekleştirilmelidir. Toprağın, havanın veya suyun kirletilmesinden kaçınılmalıdır. Makinenin imha edilmesinden kaynaklı olarak ortaya çıkan atıklar özel atık olarak sınıflandırılmaktadır. Her durumda, yerel kanunlar ve çevre koruma düzenlemeleri, makinenin kullanıldığı ülkede geçerli olan çevre kanunlarına uyulmalıdır.

Demir içeren malzemeler: Bunlar özel yetkili toplama merkezine iletilmesi gereken geri dönüştürülebilir malzemelerdir (ikincil hammaddeler).

Plastik malzemeler: Geri dönüşümü yapılan tesislerde geri dönüştürülmesine izin verilmektedir. Elden çıkartılması, kentsel atıklara benzer biçimde gömülerek gerçekleştirilir. Havaya salınmadan önce yakım sonrası toz boşaltma sistemi ile donatılmış tesislerde yakılmasına izin verilmektedir.

EN GENERAL MOUNTING AND MAINTEANCE INSTRUCTIONS

For the longest and most efficient service life, drives must be correctly mounted on the application structure. Therefore, all structure faces must be machined with H8 spigots so that they are flat and perpendicular to the drive axis.

To secure the drive, use the nuts and bolts shown under each technical drawing on the product technical sheets. Make sure to use all the fixing holes on the flanges.

For outdoor installations, drives must be protected against bad weather, treated with anticorrosive agents and oil seals protected with water-repellent grease.

In operations in which transmission malfunctions might occur due to accidental overloads, a mechanical or hydraulic safety device must be used to protect the drive.

Drives are usually connected directly to what are mainly electric or hydraulic motors by means of flanges when there are particularly critical conditions that might cause damage after installation.

With this in mind, and when heavy motors must be installed (weighing more than 100 kg), please contact our Technical Service Department, to evaluate the proper mounting position.

As an alternative, we suggest to separately mount the two units and to connect them with either a coupling or pulleys.

MACHINE DISPOSAL

Disposing of waste deriving from demolition of the machine must be done with the environment in mind, avoiding pollution of the soil, air and water. Waste from demolition of the machine is classified as special waste. Local laws and environmental protection regulations must in any case be observed, in compliance with the environmental laws in force in the country where the machine is used.

Ferrous materials: these are recyclable (secondary raw materials) to be delivered to a special authorised collection centre.

Plastic materials: recycling permitted where done, disposal in landfill for waste similar to urban waste, incineration allowed in plant equipped with post-combustion and dust damping system before being released into the air.

DE ALLGEMEINE VORSCHRIFTEN FÜR EINBAU UND WARTUNG

Der korrekte Einbau des Getriebes in die entsprechende Vorrichtung der Applikation ist Voraussetzung, um einen einwandfreien und dauerhaften Betrieb zu gewährleisten. Vorallem die Oberflaechen der Zentrierungen / Aufnahme sind in einer Toleranz H8 zu fertigen, damit die einwandfreie Uebereinstimmung mit der Getriebeachse garantiert wird.

Für die Befestigung sind die Schrauben zu verwenden, die in der Zeichnung / Teileliste des Modells vorgesehen sind. Dazu sind alle vorgesehenen Befestigungsbohrungen zu verwenden.

Für im Freien betriebene Maschinen wird empfohlen, das Getriebe soweit wie möglich vor Witterungseinflüssen zu schützen sowie mit Rostschutzmittel zu behandeln Die Dichtringe sind mit wasserabweisen dem Fett zu versehen.

Bei Betriebsbedingungen, unter denen Dauerstörungen aufgrund unvorhergesehener Überlastungen aufreten könnten oder gar die Getriebewelle blockiert werden könnte, empfiehlt sich der Einbau eines hydraulischen oder mechanischen Sicherheitsystems zum Schutz des Getriebes.

Der Anbau des Getriebes an Elektro-oder Hydraulikmotoren erfolgt normalerweise direkt über Flansche, wenn keine außergewöhnliche Situation vorliegt, die nach erfolgtem Einbau Schäden verursachen könnte.

Ist es jedoch erforderlich, sehr schwere Motoren anzubauen, deren Gewicht 100 kg überschreitet, wird empfohlen, sich an unseren Kundenservice (sales) zu wenden, um die beste Einbauposition zu ermitteln.

Alternativ dazu kann ein separater Einbau der beiden Teile erfolgen, die dann über Kupplungen oder Riemenscheiben verbunden werden.

ENTSORGUNG DER MASCHINE

Die Entsorgung des bei der Verschrottung der Maschine anfallenden Abfalls muss unter Beachtung der Umweltschutzgesetze erfolgen. Bode, Luft und Wasser dürfen nicht verschmutzt werden. Der anfallende Abfall ist als Sondermüll zu betrachten. Auf jeden Fall müssen die örtlichen Gesetze und Vorschriften zum Schutz der Umwelt des Landes, in dem die Maschine verwendet wird, befolgt werden.

Eisenhaltige Materialien: Da es sich um recyclingfähiges Material handelt (sekundäre Rohstoffe), sind diese einer zugelassenen Rohstoffsammelung zu übergeben.

Kunststoffmaterialien: Recycling zulässig wo möglich, Entrsorgung auf der Müllhalde von unter Hausmüll fallendem Abfall, Verbrennung zugelassen in Anlagen mit Nachverbrennung und Entstaubungsanlage vor dem Ablassen in die Atmosphäre.

IT NORME GENERALI PER L'INSTALLAZIONE E LA MANUTENZIONE

Per garantire un buon funzionamento dei riduttori ed una miglior durata nel tempo è necessario un corretto accoppiamento alla struttura cui viene fissato il gruppo. Pertanto le superfici di tale struttura dovranno essere lavorate con centraggi in H8 ed in modo da garantire un'ottima planarità e perpendicolarità con l'asse del riduttore.

Per il fissaggio del riduttore usare la-bulloneria indicata sotto ogni disegno nelle schede tecniche di prodotto. Usare inoltre tutti i fori di fissaggio previsti sulle flange dei riduttori.

Per gruppi installati all'aperto si consiglia, dove possibile, di proteggere i riduttori dalle intemperie, di trattarli con sistemi anticorrosivi e di proteggere i paraoli con grasso idrorepellente.

Nelle applicazioni in cui possono verificarsi sovraccarichi accidentali tali da compromettere l'integrità della trasmissione, occorre prevedere un sistema di sicurezza (idraulico, meccanico) per salvaguardare il riduttore.

L'abbinamento fra riduttori e motori, principalmente elettrici o idraulici, viene normalmente fatto mediante flangiatura diretta quando non si presentano particolari condizioni di criticità, che possono provocare danni dopo l'installazione.

A tale proposito, ove è richiesto di installare motori molto pesanti, oltre i 100 kg, consigliamo di contattare il nostro Servizio Tecnico per meglio valutare l'applicazione in funzione della posizione di montaggio.

In alternativa, si consiglia un montaggio se parato dei due particolari collegati mediante guinto o pulegge.

SMALTIMENTO DELLA MACCHINA

Lo smaltimento dei rifiuti derivati dalla demolizione della macchina dovrà essere eseguito nel rispetto ambientale, evitando di inquinare suolo, aria e acqua. I rifiuti derivanti dalla demolizione della macchina sono classificabili come rifiuti speciali. In ogni caso dovranno essere rispettate le locali legislazioni e lenormative di tutela ambientali nel rispetto delle leggi vigenti in materia nel paese di utilizzo della macchina.

Materiali ferrosi: trattasi di materiale riciclabile (materie prime secondarie) da conferire ad apposito centro di raccolta autorizzato.

Materiali plastici: riciclo consentito ove effettuato, smaltimento in discarica per rifiuti assimilabili agli urbani, incenerimento consentito in impianto dotato di postcombustione e sistema di abbattimento polveri prima dell'immissione in atmosfera.

FR REGLES GENERALES D'INSTALLATION ET D'ENTRETIEN

Pour garantir le bon fonctionnement des réducteurs et leur durée de vie maximum, il est indispensable d'assurer un bon accouplement à la structure sur laquelle le groupe doit être fixé. Aussi, les surfaces de cette structure doivent être usinées par des centrages en H8 et de façon à garantir une planéité optimale et une perpendicularité par rapport à l'axe du réducteur.

Pour effectuer la fixation du réducteur, utiliser les boulons indiqués sous chaque dessins des fiches techniques du produit. En outre, utiliser tous les trous de fixation prévus sur les brides des réducteurs.

Pour les groupes installés à ciel ouvert, il est conseillé, dans la mesure du possible, de mettre les réducteurs à l'abri des intempéries, de les traiter avec des produits anti-corrosion et de protéger les joints d'étanchéité à l'aide de la graisse hydrofuge.

Dans le cas des applications exposées à des risques de surcharges accidentelles susceptibles de compromettre la transmission, il est nécessaire de prévoir un dispositif de sécurité (hydraulique ou mécanique) de protection du réducteur.

L'assemblage des réducteurs aux moteurs, principalement électriques ou hydrauliques, est généralement assuré par bridage direct en l'absence de conditions critiques particulières susceptibles d'endommager l'installation).

A cet égard, lorsque s'avère nécessaire l'installation de moteurs très lourds, de plus de 100 kg, il est recommandé de prendre contact avec notre Service Technico qui vous aidera à mieux étudier l'application en fonction de la position de montage.

Différemment, il est recommandé d'effectuer un montage séparé des deux éléments et de les relier l'un à l'autre par l'intermédiaire d'un joint ou de poulies.

DÉMOLITION DE LA MACHINE

L'élimination des déchets provenant de la démolition de la machine doit s'effectuer dans le respect de l'environnement pour prévenir la pollution des sols, de l'air et des eaux. Les déchets provenant de la démolition de la machine rentrent d ans la catégorie des déchets spéciaux. Dans tous les cas, il est nécessaire de veiller au respect des dispositions locales et des autres normes de protection de l'environnement, en conformité aux lois en vigueur dans le pays où la machine est utilisée.

Matériaux ferreux: matériaux recyclables (matières premières secondaires) à remettre à un centre de collecte agréé.

Matières plastiques: recyclage autorisé, élimination en décharge pour déchets assimilables aux déchets urbains, incinération autorisée dans des installations à post-combustion et à système de filtrage des poussières avant rejet dans l'atmosphère.

ES NORMAS GENERALES PARA LA INSTALACIÓN Y EL MANTENIMIENTO

Para garantizar un buen funcionamiento de los reductores y una mayor duración se deberá realizar un correcto acoplamiento a la estructura en la que se fija el grupo. Por tanto las superficies de dicha estructura tendrán que estar bien planas y los ejes de los agujeros respetar una tolerancia H8, de este modo se podrá garantizar una óptima planaridad y perpendicularidad con el eje del reductor.

Pour effectuer la fixation du réducteur, utiliser les boulons indiqués sous chaque dessins des fiches techniques du produit. En outre, utiliser tous les trous de fixation prévus sur les brides des réducteurs.

Para los grupos instalados al aire libre se aconseja, donde sea posible, proteger los reductores contra la intemperie, tratarlos con sistemas contra la corrosión y proteger los sellos de lubricación con grasa hidrófuga.

En las aplicaciones donde se pueden producir sobrecargas accidentales, capaces de comprometer la integridad de la transmisión, se deberá utilizar un sistema de seguridad (hidráulico o mecánico) para salvaguardar el reductor.

El montaje entre los reductores y los motores, principalmente eléctricos o hidráulicos, generalmente se realiza con embridado directo siempre que no se presenten particulares condiciones críticas que podrían ocasionar daños después de la instalación.

Para tal fin, donde se requiera la instalación de motores muy pesados (más de 100 kg), se aconseja ponerse en contacto con nuestro Servicio Técnico para poder evaluar mejor la aplicación en función de la posición de montaje.

Como alternativa, se aconseja un montaje separado de las dos unidades y acoplarlas por medio de juntas o poleas.

DEMOLICIÓN DE LA MÁQUINA

Los residuos derivados de la demolición de la máquina deberán eliminarse respetando el medio ambiente, evitando contaminar suelo, aire y agua. Los residuos derivados de la demolición de la máquina se clasifican como residuos especiales. De todos modos, se deberán respetar las legislaciones y normativas locales de protección del medio ambiente observando las leyes vigentes en la materia del país donde se utiliza la máquina.

Materiales ferrosos: se trata de materiales reciclables (materias primas secundarias) que deben enviarse a los correspondientes centros de recolección autorizados.

Materiales plásticos: reciclado permitido si fuere necesario efectuarlo, eliminación en vertederos para residuos asimilables a los urbanos, incineración permitida en instalaciones con postcombustión y sistema de abatimiento de polvo antes de ingresar a la atmósfera.

TR GENEL MONTAJ VE BAKIM TALİMATI

FLANŞ MONTAJLI VEYA FLANŞ MONTAJLI OLMAYAN ÜNİTELER

Çıkış milli planet dişli üniteleri (M-P)

Bu üniteler için yükler ürün teknik sayfalarında gösterilenlerden %50'den daha yüksek olduğunda, çıkış tarafındaki her iki kılavuzu da kullanın.
Diğer tüm durumlarda, özellikle dişli pinyonlar monte edildiğinde, spline çıkış millerinin kılavuzları kullanılmalıdır.

Ağır, dış yük koşullarının hem giriş hem de çıkış taraflarına aynı anda uygulandığı durumlarda, lütfen Teknik Departmanımız ile iletişime geçiniz.

Delik milli-kayıcılı planet dişli üniteleri (F)

Yapısal tasarımları sayesinde bu planet dişli üniteleri özellikle net moment aktarımı için uygundur.
Dolayısı ile her zaman şaftın, planet dişli ünitesinin ekseni ile eş merkezli ve aynı doğrultuda olduğunu kontrol ediniz.

Ayak montajlı planet dişli üniteleri (CPC)

Bu bölümün başında anlatılmış olan, eş merkezlilik ve hizalama ile ilgili bağlama koşulları bu üniteler için de geçerlidir.

Planet dişli ünitesinin bağlanacak olan makine ile doğru şekilde hizalanmış olduğundan emin olunuz. Eğer bu işlemin sonuçları hakkında şüpheleriniz varsa, planet dişli ünitesi ile makine arasına esnek bir kaplin bağlayınız.

Montajlı planet dişli ünitesinin titreşime maruz kalmadığından emin olunuz.

EN GENERAL MOUNTING AND MAINTEANCE INSTRUCTIONS

UNITS WITH FLANGE CLAMPING OR WITHOUT FLANGE MOUNTING

Drive with male output shaft (M-P)

For these units, when the loads are 50% greater than those indicated on the single product technical sheets, use both spigots on the output housing.
In all other cases, especially when toothed pinions are mounted, the spigots on the splined output shafts must be used.

In applications where heavy external load conditions act simultaneously on both the output and the input sides, please contact our Technical-Service Department.

Drives with female output shaft (F)

Thanks to their construction design, these drives are particularly suitable for transmitting pure torque.
Therefore always check that the shaft is concentric and in-line with the axis of the driven shaft.

Foot mounted drives (CPC)

The fastening conditions with respect to the concentricity and alignment as discussed in the beginning of this section, also apply to these units.

Ensure that the unit is properly aligned with the machine to be operated. Should you have any doubts about the outcome of this operation, connect a flexible coupling between the drive and the machine.

Ensure that the mounted drive is not subjected to vibrations.

DE ALLGEMEINE VORSCHRIFTEN FÜR EINBAU UND WARTUNG

EINHEITEN MIT BEFESTIGUNG DURCH VORGESCHOBENEN FLANSCH BZW. OHNE FLANSCH

Getriebe mit Abtriebswelle (M-P)

Werden bei Einheiten dieser Art Leistungen angelegt, die die Werte der den jeweiligen Produkten zugeordneten technischen Datenblätter um 50% überschreiten, wird empfohlen, beide Zentrierungen, die am Gehäuse abtriebsseitig vorhanden sind, zu verwenden.
Dagegen gilt grundsätzlich in allen Fällen: vorhandene Zentrierungen an den Nutwellen verwenden, vor allem, wenn Ritzel montiert werden.

Bei Betriebsbedingungen, unter denen starke äußere Belastungen gleichzeitig am Abtrieb und Antrieb wirken, wird empfohlen, sich an unseren Kundenservice zu wenden.

Getriebe mit innenverzahnter Hohlwelle (F)

Diese Getriebeausführung kann weder Radial noch Axialkräfte übertragen.
Es muß deshalb besonders sorgfältig darauf geachtet werden, daß der Anbau an die Hohlwelle koaxial und rechtwinklig erfolgt.

Getriebe mit Befestigungsfüssen (CPC)

Auch bei diesen Einheiten gelten die zu Beginn des Kapitels erwähnten Vorschriften in Bezug auf einen koaxialen und rechtwinkligen Anbau.

Außerdem muß die Ausrichtung der Einheit mit der zu bewegenden Maschine entsprechend kontrolliert werden. Sollte dieses nicht einwandfrei garantiert werden koennen, ist zwischen Getriebe und Maschine eine flexible Verbindung einzubauen, z.B. eine elastische Kupplung.

Beim Einbau ist zu beachten, daß das auf diese Weise angebaute Getriebe keinen Vibrationen ausgesetzt werden darf.

IT NORME GENERALI PER L'INSTALLAZIONE E LA MANUTENZIONE

GRUPPI CON FISSAGGIO A FLANGIA AVANZATA O SENZA FLANGIA

Riduttori con albero lento maschio (M-P)

Per tali gruppi, quando i carichi sono superiori del 50% rispetto a quelli indicati nei grafici riportati nelle singole schede di prodotto, si consiglia di utilizzare entrambi i centraggi previsti sulla scatola lato uscita.
In tutti i casi, invece, devono essere utilizzati i centraggi previsti sugli alberi scanalati, soprattutto quando vengono montati dei pignoni dentati.

Nelle applicazioni dove si verificano condizioni di forti carichi esterni agenti contemporeneamente sia sull'uscita che sull'entrata, si consiglia di contattare il nostro Servizio Tecnico.

Riduttori con albero lento femmina (F)

Per la tipologia di costruzione questi riduttori sono idonei alla trasmissione della pura coppia.
Occorre quindi curare particolarmente la oassialità e l'ortogonalità nel collegamento con l'albero condotto.

Riduttori a basamento con piedi (CPC)

Anche per questi gruppi occorre che siano verificate le condizioni di fissaggio relative a coassialità ed ortogonalità già elencate all'inizio di questo capitolo.

Occorre inoltre controllare adeguatamente l'allineamento del gruppo con la macchina da movimentare. Se si hanno dei dubbi sulla perfetta riuscitadi tale operazione, utilizzare un collegamento non rigido fra riduttore e macchina, ad esempio un giunto elastico.

Durante l'installazione considerare che il riduttore così montato non deve essere soggetto a fenomeni di vibrazione.

FR REGLES GENERALES D'INSTALLATION ET D'ENTRETIEN

GROUPES AVEC FIXATION A BRIDE AVANCEE OU SANS BRIDE

Réducteurs à arbre lent mâle (M-P)

Pour de tels groupes, lorsque les charges sont supérieures de 50% à celles indiquées dans les graphiques des fiches des produits, il est recommandé d'utiliser les deux centrages prévus sur la carcasse, côté sortie.
Dans tous les cas, il est nécessaire d'utiliser les centrages prévus sur les arbres cannelés, en particulier quand sont montés des pignons dentés.

Dans le cas des applications présentant de fortes charges extérieures agissant simultanément sur la sortie et sur l'entrée, il est recommandé de prendre contact avec notre Service Technico.

Réducteurs à arbre lent femelle (F)

Le type de construction de ces réducteurs permet de transmettre le couple pur.
Il est par conséquent nécessaire de bien veiller à la co-axialité et à l'orthogonalité de l'accouplement avec l'arbre mené.

Reducteurs a carcasse avec pieds (CPC)

Pour ces groupes également, il est nécessaire de vérifier les conditions de fixation quant à la co-axialité et l'orthogonalité (voir début du chapitre).

De plus, il est nécessaire contrôler soigneusement l'alignement du groupe avec la machine à actionner.
Au moindre doute quant à la réussite de cette opération, utiliser un accouplement non rigide entre réducteur et machine, par exemple un joint élastique.

Lors de l'installation, ne pas oublier que le réducteur ainsi monté ne doit subir aucun phénomène de vibration.

ES NORMAS GENERALES PARA LA INSTALACIÓN Y EL MANTENIMIENTO

GRUPOS DE FIJACIÓN CON BRIDA AVANZADA O SIN BRIDA

Reductores con eje lento macho (M-P)

Para dichos grupos, cuando las cargas superen en un 50% a los valores indicados en los gráficos de cada una de las fichas del producto, se aconseja la utilización de ambos centrajes previstos en la carcasa, lado salida.
En todos los otros casos, sobretodo cuando se montan los piñones dentados, se tendrán que utilizar los centrajes previstos en los ejes ranurados.

En las aplicaciones con cargas m externas pesadas que intervienen simultáneamente en la salida y entrada, se aconseja ponerse en contacto con nuestro Servicio Técnico.

Reductores con eje lento hembra (F)

Debido al tipo de construcción estos reductores son idóneos para transmitir pares puros. Por tanto siempre hay que controlar la coaxialidad y la ortogonalidad del acoplamiento con el eje conducido.

Reductores con carcasa con pie (CPC)

También para estos grupos se tendrán que verificar las condiciones de fijación respecto a la coaxialidad y ortogonalidad que ya fueron enunciadas al comienzo de este capítulo.

Además hay que controlar la alineación del grupo con la máquina a accionar.
Si se tienen dudas sobre el buen resultado de dicha operación, entre el reductor y la máquina hay que utilizar un acoplamiento que no sea rígido, por ejemplo: una junta elástica.

Durante la instalación hay que tener en cuenta que el reductor no esté solicitado con vibraciones.

TR GENEL MONTAJ VE BAKIM TALİMATI

Konik sıktırmalı planet dişli üniteleri (FS)

Bu planet dişli ünitelerinin kurulumunu gerçekleştirmeden önce, her bir ünitenin çizimlerinde gösterilen minimum uzunluklara uygun bir tork kolu uygulayınız.

Ayrıca tepkileri kısıtlamak için kauçuk parçalar ve/veya darbe emiciler kullanarak yumuşatılması da tavsiye edilir.
Çok ağır motorların kurulumunu yaparken veya giriş tarafına bir kayış takılacağı zaman lütfen Teknik Departmanımız ile iletişime geçiniz.

Bu harici ve iletim yük koşulları, konik sıktırma sıkılığının gevşemesine sebep olarak veya şaft dayanımını etkileyerek rulman servis ömrünü belirgin miktarda kısaltabilmektedir.

Planet dişli ünitesi ile tahrik edilen ekipmanlar arasındaki bağlantının mümkün olabildiğince verimli olmasını sağlamak için, Planet dişli ünitesi şaftının iç yüzeyini ve erkek kaplin şaftını iyice temizleyin.

Konik sıktırma üzerindeki civataları, kesintisiz bir sıra ile kademeli ve düzgün bir biçimde sıkın.

Üniteyi yerinden çıkartmak için civataları sıkıştırıldıkları sıra ile kademeli olarak gevşetin.

Her bir civata ilk gevşetilmesi sırasında herhangi bir hiza kaymasının önüne geçilebilmesi için yalnızca 1/3 tur gevşetilmelidir.

Ardından üniteyi tamamen sökmeye devam edin. Bu işlemi her zaman kademeli bir biçimde, civataları yivlerinden tamamen ayırmadan gerçekleştirin.

Planet dişli ünitelerine bağlı olan miller için h6 toleransının kullanılması tavsiye edilir.

İlave olarak her bir çizimin yanında sunulmuş olan talimatları takip ediniz.

EN GENERAL MOUNTING AND MAINTEANCE INSTRUCTIONS

Shaft mounted drives (FS)

Before installing these drives, apply a torque arm that respects the minimum lengths shown on the drawing for each single unit.

It is also recommended to cushion the reaction constraint using rubber pieces and/or shock absorbers.
When installing very heavy motors or for a belt mounting on the input side, please contact our Technical Department.

These external and transmission load conditions might significantly shorten bearing service life, loosening shrink disc tightness or affecting shaft resistance.

To ensure that the drive-driven equipment coupling is as efficient as possible, thoroughly degrease the internal surface of the drive shaft and its male coupling shaft.

Tighten the screws on the shrink disc in a gradual and uniform manner in a continuous sequence.

To remove the unit, gradually loosen the screws in the same order that they were tightened; i.e. in a gradual and continuous sequence.

Each screw should be backed off one third turn during the first loosening sequence to avoid any misalignment.

Then proceed to completely unfasten the unit, always in a gradual manner without completely removing the screw from the threads.

It is recommended to use tolerance h6 for the male shafts to be connected to the Planetary Drives.

In addition, follow the instructions provide next to each drawing.

DE ALLGEMEINE VORSCHRIFTEN FÜR EINBAU UND WARTUNG

Getriebe mit Hohlwelle für Anbau einer Schrumpfscheibe (FS)

Für den Einbau dieser Getriebe sollte die Achsstrebe die Mindestlänge aufweisen die in der Zeichnung der jeweiligen Einheit angegeben ist.

Außerdem wird empfohlen, die Achsverbindung mit Gummiund/oder stoßdämpfenden Elementen abzufedern. Bei besonderen Montagebedingungen, bei denen der Anbau von sehr schweren Motoren vorgesehen ist oder Zugkräfte von außen am Eingang wirken, sollten.
Sie sich an Technische Abteilung wenden, um den Anbau zu überprüfen.

Summieren sich Sonderbelastungen dieser Art und Radialkräfte, kann die Lebensdauer der Lager erheblich eingeschränkt werden sowie die Wirksamkeit der Kupplungsspannung reduziert und die Lebensdauer der Welle beeinflußt werden.

Vor dem Anziehen der Reibschlußverbindung wird empfohlen, die Innenfläche der Getriebewelle und die entsprechende Zapfwelle von Fett zu befreien.

Danach die Schrauben langsam und gleichmäßig, ohne Unterbrechung, anziehen.

Zum Lösen der Verbindung sind die Schrauben auf dieselbe Weise, gleichmäßig und ohne Unterbrechung zu loesen.

Es wird empfohlen, jede Schraube um eine Drittel-Drehung im ersten Lockerungsvorgang zu lösen, damit eine eventuelle Verschiebung verhindert wird.

Danach die Schrauben vollständig lösen, jedoch immer gleichmäßig und ohne sie aus den Gewinden zu nehmen.

Die an die Planetary Drives anzuschließende Welle sollte eine Toleranz von h6 uafweisen.

Ansonsten sind die Daten in den technischen Zeichnungen zu beachten.

IT NORME GENERALI PER L'INSTALLAZIONE E LA MANUTENZIONE

Riduttori per montaggio pendolare (FS)

Per l'installazione di questi riduttori si prescrive l'applicazione di un braccio di reazione che rispetti le lunghezze minime riportate a disegno per ogni singolo gruppo.

Inoltre, si consiglia di ammortizzare il vincolo di reazione con elementi in gomma e/o ammortizzatori.
In caso di applicazione di motori molto persanti o di montaggio con cinghia sul lato entrata, contattare il nostro Servizio Tecnico per verificare l'installazione.

In questi casi si producono, infatti, carichi esterni che, aggiungendosi a quelli della transmissione, possono ridurre sensibilmente la vita dei cuscinetti, compromettere l'efficacia del serraggio dell'anello calettatore o influire sulla resistenza dell'albero.

Per garantire un efficiente accoppiamento riduttore - utente, occorre sgrassare opportunamente la superficie interna dell'albero del riduttore e il relativo albero maschio di accoppiamento.

Per un corretto serraggio dell'anello calettatore si raccomanda di serrare le viti in modo graduale ed uniforme, con sequenza continua.

Per la rimozione, occorre svitare gradualmente le viti nello stesso modo in cui sono state avvitate, cioè con sequenza continua e graduale.

Si consiglia di far compiere 1/3 di giro ad ogni vite nella prima equenza di allentamento, in modo da evitare eventuali intraversamenti.

Procedere poi allo sbloccaggio totale, ma sempre gradualmente e senza arrivare all'estrazione totale delle viti dai filetti.

É consigliabile realizzare l'albero maschio da accoppiare ai gruppi Planetary Drives in tolleranza h6.

Seguire, inoltre, le indicazioni riportate a lato di ogni disegno.

FR REGLES GENERALES D'INSTALLATION ET D'ENTRETIEN

Réducteur pour montage pendulaire (FS)

Pour l'installation de ces réducteurs, il est nécessaire d'appliquer un bras de réaction respectant les longueurs minimales indiquées sur le plan de chaque groupe.

En outre, il est conseillé d'amortir le lien de réaction au moyen d'éléments en caoutchouc et/ou d'amortisseurs.
En cas d'application de moteurs très lourds ou de montage avec courroie sur le côté entrée, prendre contact avec notre Service Technico pour contrôler l'application.

Dans de tels cas en effet, sont induites des charges externes qui, ajoutées aux charges de transmission, peuvent réduire sensiblement le durée de vie des roulements, compromettre l'efficacité du serrage de la frette ou avoir une influence sur la résistance de l'arbre.

Pour garantir l'efficacité de l'accouplement réducteur-machine, il est nécessaire de dégraisser la surface interne de l'arbre du réducteur ainsi que l'arbre mâle de couplage correspondant.

Pour le bon serrage de la frette, il est recommandé serrer les vis de manière graduelle a uniforme en séquence continue.

Pour le retrait du réducteur, il est nécessaire de dévisser graduellement les vis comme lors du serrage, c'est-à-dire en séquence continue et graduelle.

Il est conseillé de dévisser de 1/3 de tour chaque vis lors de la première séquence de desserrage, de façon à éviter les éventuelles mises de travers.

Débloquer ensuite les vis totalement, mais toujours graduellement et sans retirer les vis des filetages.

Il est conseillé de réaliser l'arbre mâle à accoupler aux groupes Planetary Drives avec une tolérance h6.

Par ailleurs, il est conseillé de suivre les indications figurant en marge de chaque dessin.

ES NORMAS GENERALES PARA LA INSTALACIÓN Y EL MANTENIMIENTO

Reductores para montaje pendular (FS)

Para la instalación de estos reductores es necesario aplicar un brazo de reacción que respete las longitudes mínimas indicadas en el plano para cada grupo.

Además, se aconseja amortiguar el vínculo de reacción con elementos de goma y/o amortiguadores.
En el caso de aplicaciones de motores muy pesados o de montaje con correa en la entrada, se aconseja ponerse en contacto con nuestro Servicio Técnico para verificar la instalación.

En efecto, en estos casos se producen cargas externas que, agregándose a aquellas de la transmisión, pueden reducir sensiblemente la vida útil de los rodamientos y perjudiar la eficacia del ajuste del disco de contracción o influir sobre la resistencia del eje.

Para garantizar un acoplamiento eficiente entre reductor-máquina, hay que desengrasar bien la superficie interna del eje reductor y el respectivo eje macho de acoplamiento.

Para un correcto cierre del disco de contracción se recomienda ajustar los tornillos en modo gradual, uniforme y en secuencia continua.

Para la remoción, se deberán aflojar los tornillos del mismo modo que para el ajuste o sea, en secuencia continua y gradual.

Mientras se aflojen los tornillos, se aconseja hacerles dar 1/3 de vuelta a cada uno, de este modo se evitarán eventuales desalineamientos.

Después efectuar el desbloqueo total, pero siempre gradual y sin extraer totalmente los tornillos de los filetes.

Se aconseja realizar el eje macho, a acoplar con los grupos Planetary Drives, con una tolerancia h6.

Además, se recomienda seguir las instrucciones indicadas al lado de cada plano.

TR YAĞLAMA

Planet dişli ünitesinin verimli çalıştırılabilmesi için doğru şekilde yağlanması gereklidir.

Dolayısı ile kurulum sırasında aşağıdaki koşulları da kontrol ediniz.

- Bütün tapaların MONTAJ POZİSYONLARI bölümünde (sayfa 74-77) yer alan montaj pozisyonunda belirtilmiş olan sıraya göre ve talimatlar uyarınca doğru biçimde takıldığından emin olunuz.
- Yatay yerleştirilmiş olan üniteleri, doğrusal veya açısal bir konfigürasyondan bağımsız olarak merkez eksene kadar doldurunuz. Yağ seviyesini görsel olarak kontrol etmek için, merkez eksenin hemen üzerinde yer alan tapayı sökünüz.
- Dik açılı ünitelerde konik dişli yağın serbest biçimde dolaşmasına izin verecek biçimde bağlanır. Her durumda doldurma işlemini her iki uçta da, (ancak aynı anda değil), ünite yerde, doğru montaj pozisyonu temel alınarak durağan haldeyken gerçekleştiriniz. Bu, işlemi hızlandıracaktır ve yağın bir bölmeden bir diğerine gitmesinin ne kadar zaman alacağından bağımsız şekilde doğru miktarda yağ konulmasını sağlayacaktır.
- Dikey olarak montaj edilmiş olan ve ünite ile birlikte tedarik edilen dirsekler ve uzatmalar kullanılarak tamamen doldurulması gereken ünitelerde özellikle dikkat edilmelidir. Bu pozisyonlar için istek üzerine tedarik edilebilen bir genleşme tankı kullanılması tavsiye edilmektedir. Bu tank Planet dişli ünitesinin en üst noktasına konumlanmalı ve herhangi bir yağ genleşmesini toplamak üzere veya ulaşılması zor yerlerdeki ünitelerin doldurulmasını sağlamak için kullanılmalıdır.
- Frenler ve montajlı motor bağlantıları planet dişli ünitesinden ayrı bir bölme oluşturur ve dolayısı ile ayrıca doldurulmalıdır. MODÜLER FRENLER bölümüne bakınız. (sayfa 86-87).
- Sürekli çalışma koşullarında çalışan üniteler barındırdıkları fazla miktarda yağdan dolayı aşırı ısınabilirler. Bu gibi durumlarda daha düşük viskozite değerine sahip bir yağ kullanılmalıdır.

EN LUBRICATION

Correct lubrication is required to run drives efficiently.

Therefore, check the following conditions during installation:

- Make sure that all plugs are correctly mounted with respect to the installation position specified in the order and according to the instructions in the MOUNTING POSITIONS section (page 74-77).
- Fill horizontally-mounted units up to the central line regardless of a linear-or angular configuration. To visually check the oil level, unscrew the plug located just above the center line.
- For right angle units, the bevel gear is connected so that the oil is free to circulate. In any case, carry out the filling operation on both ends, but not simultaneously, and while the unit is on the ground, based on the correct mounting position. This will speed up the operation and ensure that the correct quantity oil is introduced, regardless of how long it would take for the oil to go from one chamber to the other.
- Particular attention should be paid to verticallymounted units which must be completely filled by means of elbows and extensions supplied with the unit. For these positions it is recommended to use an expansion tank, which can be supplied separately on request. This tank must be positioned above the highest point of the drive and is designed to collect any oil expansions or to ensure that the units mounted in hard-to reach places can be topped up.
- Brakes and assembled motor connections form a separate chamber from the drive and thus must be filled separately see the MODULAR BRAKES section (page 86-87).
- Units running under continuous duty conditions may overheat due to the large quantity of oil they contain. In these cases, use oil with a, lower viscosity.

DE SCHMIERUNG

Nur eine korrekte Schmierung gewährleistet den problemlosen Betrieb des Getriebes.

Es wird deshalb empfohlen, bei der Installation folgende Bedingungen zu überprüfen:

- Kontrollieren, ob je nach bestellter Montageposition die Einfüllstutzen korrekt montiert sind, vgl. dazu die Angaben im Abschnitt EINBAULAGE (Seite 74-77).
- Ist das Getriebe waagerecht montiert, muß es bis zur Mitte aufgefüllt werden: Sichtkontrolle des Ölstandes vornehmen, indem der Öeleinfüllstopfen abgeschraubt wird.
- Bei Winkelgetrieben ist der rechtwinklige Teil so angebaut, daß das Öel ungehindert zirkulieren kann; es empfiehlt sich jedoch, das Öl am Boden einzufüllen, wobei es auf beiden Seiten geoeffnet, aber nicht gleichzeitig eingefüllt wird; der Vorgang wird dadurch beschleunigt und man kann gleichzeitig sicher sein, die erforderliche Ölmenge einzufüllen, da das Öl Zeit braucht, um von einer Kammer in die andere zu fließen.
- Besondere Sorgfalt ist bei Getrieben erforderlich, die senkrecht montiert werden; sie müssen mit Hilfe der beigelegten Kniestücke und Verlängerungen vollständig aufgefüllt werden. Für diese Einbauposition wird die Verwendung eines Ausgleichsbehälter empfohlen, der auf Anfrage separat geliefert wird. Das Gefäß muß oberhalb des höchsten Getriebepunktes positioniert werden und soll überschüssige Ölmengen aufnehmen bzw. bei Getrieben in unzugänglichen Positionen ein sicheres Einfüllen gewährleisten.
- Die montierten Bremsen und Motoranschlüsse bilden eine vom restlichen Getriebe ausfuehrung getrennte Kammer; diese muß deshalb getrennt vom Getriebe aufgefüllt werden, siehe Abschnitt BREMSENMODULE (Seite 86-87).
- Außerdem kommt es bei Getrieben, die im Dauerbetrieb arbeiten, aufgrund der darin enthaltenen großen Ölmengen leicht zu Überhitzung; in diesem Fall wird die Verwendung von Öltypen mit niedrigerem Viskositätsgrad empfohlen.

IT LUBRIFICAZIONE

Per il buon funzionamento dei riduttori è indispensabile una corretta lubrificazione.

Si consiglia pertanto di verificare le seguenti condizioni in fase di installazione:

- Controllare che, in relazione alla posizione di montaggio specificata in fase d'ordine, il gruppo abbia i tappi di servizio montati correttamente, secondo le indicazioni del capitolo POSIZIONI DI MONTAGGIO (pag. 74-77).
- Quando il gruppo è montato in posizione orizzontale bisogna riempirlo fino alla mezzeria, indipendentemente dalla configurazione lineare o angolare. Controllare visivamente il livello dell'olio svitando il tappo posto sulla stessa zona o in zona limitrofa, vale a dire appena sopra.
- Nel caso di gruppi angolari, la coppia conica è collegata in modo che l'olio possa circolare liberamente; conviene comunque effettuare il riempimento a terra, secondo la corretta posizione di montaggio, introducendo olio da entrambe le parti non contemporaneamente, in modo da snellire l'operazione di riempimento e, nello stesso tempo, avere la certezza di introdurre la quantità di olio necessaria, qualora l'olio impieghi tempo per passare da una camera all'altra.
- Rivolgere particolare attenzione ai gruppi montati in posizione verticale che devono essere completamente riempiti mediante gomiti e prolunghe, di cui è dotato il gruppo. Per queste posizioni è consigliabile l'usodi un vaso di espansione fornito su richiesta, separatamente dal gruppo. Il vaso deve essere posizionato oltre il punto più alto del riduttore ed ha il compito di alloggiare eventuali espansioni di olio o di garantire un rabbocco sicuro per gruppi montati in posizioni inaccessibili.
- I freni e gli attacchi motore assemblati formano una camera separata dal resto del riduttore; bisogna pertanto provvedere al loro riempimento separatamente dal riduttore, vedere capitolo FRENI MODULARI (pag.86-87).
- I gruppi con servizio continuativo sono soggetti a surriscaldamento per la notevole quantità di olio in essi contenuta: in questi casi consigliamo l'uso di oli con una viscosità più bassa.

FR LUBRIFICATION

Une bonne lubrification est indispensable au bon fonctionnement des réducteurs.

Il est par conséquent recommandé de s'assurer des conditions suivantes en cours d'installation:

- En fonction de la position de montage spécifiée lors de la commande, s'assurer que les bouchons de service du groupe sont montés correctement, conformément aux indications du chapitre POSITIONS DE MONTAGE (Page 74-77).
- Lorsque le groupe est monté en position horizontale, il est nécessaire de le remplir de lubrifiant à mi-hauteur, que la configuration soit linéaire ou angulaire Contrôler le niveau de lubrifiant visuellement en dévissant le bouchon se trouvant à mi-hauteur ou à proximité, c'est-à-dire juste audessus.
- Dans le cas de groupes angulaires, la couple conique est relié de façon à ceque le lubrifiant puisse circuler librement; il convient cependant d'effectuer le remplissage au sol, selon la position exacte de montage, en introduisant le lubrifiant des deux côtés, non simultanément, de façon à faciliter le remplissage et, dans le même temps, d'être certain que la quantité d'huile nécessaire a bien été introduite dans le cas où le lubtifiant mettrait un certain temps pour passer d'une chambre à l'autre.
- Faire particulièrement attention aux groupes montés en position verticale, lesquels doivent être entièrement remplis au moyen de coudes et rallonges dont le groupe est équipé. En ce qui concerne ces positions, il est conseillé d'utiliser un réservoir d'expansion fourni sur demande. Le réservoir doit être placé au-dessus du point le plus haut du réducteur, sa fonction est de permettre aux éventuelles expansions du lubrifiant d'y pénétrer ou bien de garantir une remise à niveau dans le cas de groupes montés dans des postions inaccessibles.
- Les freins et les accouplements au moteur forment une chambre séparée du reste du réducteur; il est par conséquent nécessaire de les remplir séparément du réducteur (voir chapitre FREINS MODULARIES, page 86-87).
- Les groupes à fonctionnement en service continu sont sujets des surchauffes en raison de la très grande quantité d'huile qu'ils contiennent: dans ce cas, il est conseillé d'employer des lubrifiants à degré de viscosité inférieur.

ES LUBRICACIÓN

Para un buen funcionamiento de los reductores es indispensable una correcta lubricación.

Por tanto, se aconseja verificar las siguientes condiciones durante la instalación:

- Controlar que, según la posición de montaje especificada en la orden, el grupo tenga todos los tapones de servicio correctamente montados, según las indicaciones del capítulo POSICIONES DE MONTAJE (pág.74-77).
- Cuando el grupo esté montado en posición horizontal habrá que llenarlo hasta la línea central, independientemente de la configuración lineal o angular. Controlar visualmente el nivel de aceite aflojando el tapón que está situado en la misma zona o en una zona limítrofe o sea, apenas por encima.
- En el caso de grupos angulares, los en granajes cónicos están conectados de modo tal que el aceite pueda circular libremente: se aconseja introducir el aceite en ambos lados pero no simultáneamente y mientras la unidad esté en el piso, según la correcta posición de montaje. De este modo se hará más rápido el llenado y, al mismo tiempo, se podrá estar seguro que se introdujo la cantidad necesaria de aceite, ya que el aceite emplea un cierto tiempo para pasar de una cámara a otra.
- Prestar una particular atención a los grupos montados en posición vertical pues se tienen que llenar totalmente con tubos acodados y extensiones suministradas junto con el grupo. Para estas posiciones se aconseja utilizar un recipiente de expansión suministrado a pedido, separado del grupo. Dicho recipiente tiene que ubicarse por encima del punto más alto del reductor y cumple la función de absorber las eventuales dilataciones del aceite o de garantizar un llenado seguro en los grupos que se montaron en posiciones inaccesibles.
- Los frenos y las conexiones al motor for man una cámara separada del resto del reductor: por tanto hay que prever su llenado separadamente del reductor, ver el capítulo FRENOS MODULARES (pág. 86-87).
- Los grupos con servicio continuo pueden recalentarse debido a la gran cantidad de aceite que contienen: en estos casos se aconseja utilizar aceites con una viscosidad más baja.

TR YAĞLAMA

Lütfen katalogta gösterilmiş olan yağ miktarlarının yaklaşık değerler olduğunu ve Planet dişli ünitesinin konfigürasyonuna (tahviller, fren ve motor bağlantıları ve çıkış adaptörlerine) bağlı olarak değişiklik gösterebileceğini unutmayınız.

Normal çalışma sırasında dış gövdenin sıcaklığı 80°C'nin üzerine çıkmamalıdır.

Eğer sıcaklık 80°C'nin üzerine çıkarsa, PGR Teknik Departmanı ile iletişime geçiniz.

YAĞ DEĞİŞİMİ

- İlk yağ değişimi 100 saatlik çalışmadan sonra gerçekleştirilmelidir.
- Daha sonraki yağ değişimleri 2000 saatlik çalışmadan sonra veya senede bir kez yapılmalıdır.
- Atık birikmesini önlemek için yağı, Planet dişli ünitesi hala sıcak iken değiştiriniz.
- Bütün tapaları temizleyiniz.
- Yeni yağ eklemeden önce ünite yağ tedarikçisi tarafından tavsiye edilen sıvı bir deterjan ile yıkanmalıdır.
- Periyodik olarak ünite rölantide çalışırken yağ sızıntıları ve yağ seviyesini kontrol ediniz.
  Eğer gerekli görülürse aynı tipte yağ kullanarak tamamen doldurunuz.
- **Dikkat:**
  Kullanılan yağ miktarı yağ kapasitesinin %10'un dan fazla ise sızıntı olup olmadığını tekrar kontrol ediniz.

KULLANILMIŞ YAĞIN BERTARAFI

Kullanılmış olan yağları elden çıkartırken, toprağın, havanın ve suyun kirletilmemesi, çevreye ve insan sağlığına özenli davranılabilmesi için işi, doğru şekilde gerçekleştirilmesi, gerekli önlemlere ve profesyonel uzmanlığa uygun davranılması zorunludur.

Başka maddeler ile kirlenmemiş olan kullanılmış yağlar, yürürlükte olan yerel çevre koruma kanunlarına, yasa ve düzenlemelere tam olarak uyularak toplanmalı ve özel yetkili bir merkeze teslim edilmelidir.

EN LUBRICATION

Please note that the oil quantities shown in the catalogue are approximate and may vary depending on the drive configuration: ratio, brake, motor connections and output adapters.

During normal operation, the temperature of the outer casing should not exceed 80°C.

If the temperature exceeds 80°C, contact the PGR Technical Department.

OIL CHANGES

- The first oil change should be done after 100 hours of duty.
- Subsequent oil changes should take place after 2000 hours or at least once a year.
- To avoid sludge deposits, change the oil while the drive is still hot.
- Clean all plugs.
- Before adding the new oil, the unit should be flushed with a liquid detergent recommended by the lubricant supplier.
- Periodically check for oil leaks and the oil level while the unit is idling.
  If needed, top up using the same type of oil.
- **Attention:**
  If the quantity of oil used to top up is greater than 10% of the oil capacity, then check again for leaks.

DISPOSING OF EXHAUSTED OIL

When disposing of exhausted oils, it is mandatory to adopt all precautions and professional expertise necessary for carrying out the job in a workmanlike manner so as not to pollute the soil, air and water and treating the environment and human health with care.

Exhausted oil not contaminated by other substances must be collected and delivered to a special authorised centre, in full compliance with local environmental protection laws and regulations and laws in force.

DE SCHMIERUNG

Die in den Tabellen den einzelnen Größen zugeordneten Ölmengen sind Richtwerte, die je nach Getriebeausführung und damit je nach Übersetzung, Bremse, Motoranschluß und Ausgangswelle variieren.

Beim Betrieb sollte die Gehäusetemperatur von außen 80°C nicht überschreiten.

Sollten höhere Temperaturen auftreten, wenden Sie sich bitte an den Technische Abteilung von PGR.

ÖLWECHSEL

- Der erste Ölwechsel sollte nach 100 Betriebstunden vorgenommen werden.
- Weitere Ölwechsel sollten nach 2000 Betriebsstunden bzw. mindestens einmal jährlich erfolgen.
- Das Öl bitte bei noch warmen Getriebe ablassen. Auf diese Weise werden Ablagerungen vermieden.
- Ölstopfen reinigen.
- Vor dem Auffüllen mit neuem Öl, das Getriebe innen mit einem vom Schmierstoffhersteller empfohlenen Reinigungsmittel auswaschen.
- Getriebe regelmäßig auf Dichtigkeit prüfen sowie sicherstellen, daß bei Stillstand das Öl bis zum vorgesehenen Ölstand reicht. Sofern erforderlich, ist Öl nachzufüllen; der Öltyp muß mit dem im Getriebe bereits enthaltenen Oel unbedingt übereinstimmen.
- **Achtung:**
  Eine Nachfüllmenge, die 10% der Gesamtmenge übersteigt, könnte auf eine Undichtigkeit des Getriebes hinweisen.

ALTÖLENTSORGUNG

Bei den Vorgängen zur Altölentsorgung ist es vorgeschrieben, alle notwendigen Sicherheitsmaßnahmen zu treffen und die Arbeit kunstgerecht durchzuführen, damit Boden, Luft und Wasser nicht verschmutzt und die Umwelt und die Gesundheit des Menschen geschützt werden.

Nicht mit anderen Stoffen verunreinigtes Altöl muss unter Berücksichtigung der örtlichen Umweltschutzgesetze und-vorschriften gesammelt und der speziellen zugelassenen Entsorgungsstelle übergeben werden.

IT LUBRIFICAZIONE

I quantitativi di olio indicati nelle tabelle di catalogo, riportate per ogni grandezza, sono puramente indicativi e sono soggetti a variazioni in funzione della configurazione del riduttore: tipo di rapporto, freno, attacco motore e supporto in uscita.

Durante il funzionamento la temperatura delle superfici esterne non deve superare gli 80°C.

Se si verificano temperature superiori contattare il Servizio Tecnico PGR.

CAMBIO OLIO

- Effettuare il primo cambio olio dopo 100 ore di funzionamento.
- I cambi successivi devono avvenire dopo 2000 ore o almeno una volta all'anno.
- Lo svuotamento del riduttore va effettua to con l'olio ancora caldo, per evitare il deposito di morchie.
- Pulire i tappi
- Prima del riempimento con nuovo olio effettuare un lavaggio interno del gruppo con liquido detergente consigliato dal fornitore di lubrificante.
- Controllare periodicamente che non visiano perdite d'olio e che, a gruppo fermo, l'olio raggiunga il livello previsto. Se necessario, effettuare un rabbocco con lo stesso tipo di olio presente nel riduttore.

• **Attenzione:**
Un rabbocco superiore al 10% del quantitativo totale può essere indice di perdita nel riduttore.

SMALTIMENTO OLIO ESAUSTO

Durante le fasi di smaltimento degli oli esausti è obbligatorio utilizzare tutte le cautele e le professionalità necessaire per eseguire il lavoro a regola d'arte, evitando di inquinare suolo, aria, acqua e rispettando l'ambiente e la salute umana.

L'olio esausto, non inquinato da altre sostanze, deve essere raccolto e conferito in apposito centro autorizzato, nel pieno rispetto delle locali legislazioni e normative di tutela ambientale e delle leggi vigenti.

FR LUBRIFICATION

Les quantités d'huile indiquées dans les tableaux du catalogue pour chaque dimensionnement sont purement indicatives et peuvent varier en fonction de la configuration du réducteur: type de rapport, frein, accouplement au moteur et support en sortie.

Pendant le fonctionnement du réducteur, la température de ses surfaces extérieures ne doit pas dépasser 80°C.

En présence de températures supérieures, prendre contact avec le Service Technico PGR.

VIDANGE D'HUILE

- Faire la première vidange après 100 heures de functionnement.
- Exécuter les vidanges suivantes toutes les 2000 heures ou bien au moins une fois pas an.
- La vidange du réducteur doit se faire lorsque l'huile est encore chaude de façon à éviter les dépôts de cambouis.
- Nettoyer les bouchons.
- Laver l'intérieur du réducteur avec un détergent conseillé par le fournisseur du lubrifiant avant d'effectuer le remplissage.
- Contrôler périodiquement qu'il n'y ait pas de pertes d'huile et que, lorsque le groupe est arrêté, l'huile atteigne bien le niveau prévu. Si nécessaire, rétablir ce niveau avec de l'huile du même type que celle se trouvant dans le rêducteur.

• **Attention:**
Une remise à niveau avec plus de 10% de la quantité totale de l'huile contenue dans le réducteur peut être un signe de fuite dans ce dernier.

ÉLIMINATION DES HUILES USÉES

Durant les phases d'élimination des huiles usées, il est impératif de prendre toutes les précautions et les mesures techniques pour opérer dans les règles de l'art et prévenir ainsi la pollution des sols, de l'air et des eaux, pour respecter l'environnement et la santé des personnes.

Les huiles usées, non polluées par d'autres substances, doivent être récupérées et remises à un centre de collecte agréé, dans le respect des dispositions locales et des autres normes de protection de l'environnement, en conformité aux lois en vigueur.

ES LUBRICACIÓN

Las cantidades de aceite indicadas en las tablas del catálogo para cada dimensión, son sólo indicativas y pueden variar en función de la configuración del reductor: tipo de relación, freno, conexion al motor y soporte de salida.

Durante el funcionamiento la temperatura de las superficies externas no tiene que superar los 80°C.

Si las temperaturas fueran superiores será necesario ponerse en contacto con el Servicio Técnico PGR.

CAMBIO DE ACEITE

- Efectuar el primer cambio de aceite después de las 100 horas de funcionamiento.
- Los cambios sucesivos se deberán realizar después de las 2000 horas o por lo menos una vez al año.
- El vaciado del reductor se tiene que realizar estando todavía el acetie caliente, para evitar el depósito de sedimentos.
- Limpiar los tapones.
- Antes de efectuar el llenado con el aceite nuevo hay que lavar el interior del grupo con el detergente que aconseja el provedor del lubricante.
- Controlar periódicamente que no haya pérdidas de aceite y que, estando el grupo parado, el aceite alcance el nivel previsto. Si fuese necesario, efectuar un llenado con el mismo tipo de aceite del reductor.

• **Atención:**
Si el llenado supera el 10% de la cantidad total puede ser que haya una pérdida en el reductor.

ELIMINACIÓN DE ACEITE USADO

Durante las fases de eliminación de los aceites usados se requiere ser extremadamente cauteloso y profesional para efectuar correctamente el trabajo, evitando contaminar suelo, aire, agua y respetando el medio ambiente y la salud humana.

El aceite usado, no contaminado con otras sustancias, debe recolectarse y enviarse al centro autorizado correspondiente, respetando las legislaciones y normativas locales de protección del ambiente y leyes vigentes.

TR YAĞLAMA

PGR, köpüklenmeyen özelliklere sahip EP katkılı yağ kullanılmasını tavsiye etmektedir. Eğer Planet dişli ünitesi yüksek sıcaklıklara maruz kalıyorsa, EP katkılı sentetik yağlar kullanın (Mobil gear SHC XMP 220 PAO Sentetik Yağ, EP, ISO VG 220 mineral yağlar ile uyumlu).

Bu düşünce ile Tablo 4 farklı ortam sıcaklıklarına dair yağlama gereksinimlerini karşılayan ticari olarak satışı olan bazı yağ tiplerini göstermektedir.

EN LUBRICATION

PGR recommends using EP additive oil with anti foaming properties. If the drive is subjected to high temperatures, use EP additive synthetic oil (such as Mobilgear SHC XMP 220 PAO Synthetic Oil, EP, ISO VG 220 compatible with mineral oils).

With this in mind, Table 4 shows some types of commercially available oils that meet the lubrication requirements in relation to different ambient temperatures.

DE SCHMIERUNG

PGR empfiehlt Getriebeöltypen mit EP- Zusatz und Anti-Schaum - Eingenschaft. Ist das Getriebe starken Temperaturschwankungen ausgesetzt, wird die Verwendung von synthetischen Öltypen mit EP - Zusatz empfohlen. (Mobilgear SHC XMP 220 SYNTHETIKOEL PAO, EP, ISO VG 220 kompatibel mit Mineraloelen).

Dazu sind in Tabelle 4 einige im Handel erhältliche Öltypen aufgeführt, deren Ei genschaften unterschiedlichen Raumtemperaturen angepaßt sind.

Genel olarak, Planet dişli üniteleri yağsız olarak tedarik edilmektedir.

Generally, Planetary Drives are supplied without lubricant.

HINWEIS: Saemtliche Getriebe Planetary Drives werden ohne Oelfullung ausgeliefert.

Kullanılacak yağlar ortam sıcaklığına göre seçilmektedir.

Lubricants are selected in relation to ambient temperature.

Auswahl des Schmiermittels in Bezug auf die Umgebungstemperatur.

Tablo 4 / Table 4 / Tabelle 4

YAĞLAMA / LUBRICANT / SCHMIERMITTE									
	Mineral Yağ / Mineral Oils / Mineralöle			Poly- Alpha-Olefin Sentetik Yağlar (PAO) Poly- Alpha-Olefin Synthetic Oils (PAO) Synthetische Poly-Alpha-Olefin-Öle (PAO)			Polyglycol Sentetik Yağlar (PG) Polyglycol Synthetic Oils (PG) Synthetische Polyglykolöle (PG)		
Ortam sıcaklığı Ambient temperature Umgebungstemperatur	-10°C +30°C	+10°C +45°C	+30°C +60°C	-20°C +60°C			-20°C +60°C		
Üretici Manufacturer Hersteller	ISO VG 150	ISO VG 220	ISO VG 320	ISO VG 150	ISO VG 220	ISO VG 320	ISO VG 150	ISO VG 220	ISO VG 320
AGIP	Blasia 150	Blasia 220	Blasia 320	-	Blasia SX 220	Blasia SX 320	Blasia S 150	Blasia S 220	Blasia S 320
BP	Energol GR-XP 150	Energol GR-XP 220	Energol GR-XP 320	Enersyn EPX 150	Enersyn EPX 220	Enersyn EPX 320	Enesyn SG 150	Enesyn SG 220	Enesyn SG 320
CASTROL	Alpha SP 150	Alpha SP 220	Alpha SP 320	Alphasyn EP 150	Alphasyn EP 220	Alphasyn EP 320	Alphasyn PG 150	Alphasyn PG 220	Alphasyn PG 320
CHEVRON	Ultra Gear 150	Ultra Gear 220	Ultra Gear 320	Tegra Synt. 150	Tegra Synt. 220	Tegra Synt. 320	HiPerSYN 150	HiPerSYN 220	HiPerSYN 320
ESSO	Spartan EP 150	Spartan EP 220	Spartan EP 320	Spartan S EP 150	Spartan S EP 220	Spartan S EP 320	Glycolube 150	Glycolube 220	Glycolube 320
KLUBER	Klüberoil GEM 1-150	Klüberoil GEM 1-220	Klüberoil GEM 1-320	Klübersynth EG 4-150	Klübersynth EG 4-220	Klübersynth EG 4-320	Klübersynth GH 6-150	Klübersynth GH 6-220	Klübersynth GH 6-320
MOBIL	Mobilgear XMP 150	Mobilgear XMP 220	Mobilgear XMP 320	Mobilgear SHC XMP 150	Mobilgear SHC XMP 220	Mobilgear SHC XMP 320	Glygoyle 22	Glygoyle 30	Glygoyle 22
SHELL	Omala 150	Omala 220	Omala 320	Omala HD 150	Omala HD 220	Omala HD 320	Tivela S150	Tivela S220	Tivela S320
TOTAL	Carter EP 150	Carter EP 220	Carter EP 320	Carter SH 150	Carter SH 220	Carter SH 320	Carter SY 150	Carter SY 220	Carter SY 320

IT LUBRIFICAZIONE

PGR consiglia l'uso di olii per ingranaggi con additivi EP e caratteristiche antischiuma. Quando il riduttore è sottoposto ad elevate temperature, si consiglia l'uso di olii a base sintetica con additivi EP (tipo Mobilgear SHC XMP 220 Olio sintetico PAO, EP, ISO VG 220 compatibile con olio minerali).

A tale riguardo la Tabella 4 riporta alcuni tipi di olii commerciali che rispondono alle caratteristiche richieste in funzione della temperatura ambiente.

FR LUBRIFICATION

PGR conseille l'utilisation des huiles pour engrenages avec additifs EP et anti-mousse. Lorsque le réducteur est soumis à de hautes températures, il est conseillé d'utiliser des huiles de synthèse avec additifs EP (type Mobilgear SHC XMP 220 Huile de synthèse PAO, EP, ISO VG 220 compatible avec les huiles minérales).

Le tableau 4 indique certains types d'huiles vendues dans le commerce quicorrespondent aux caractéristiques requises, en fonction de la température ambiante.

ES LUBRICACIÓN

PGR aconseja el uso de aceites para engranajes con aditivos EP con características antiespuma. Cuando el reductor está sometido a elevadas temperaturas, se aconseja el uso de aceites de base sintética con aditivos EP (tipo Mobilgear SHC XMP 220 Aceite sintético PAO, EP, ISO VG 220 compatible con aceites minerales).

Para tal fin en la Tabla 4 se indican algunos tipos de aceites comerciales que cumplen con las características solicitadas en función de la temperatura ambiente.

In generale, i riduttori Planetary Drives vengono forniti privi di lubrificante.

Les réducteurs Planetary Drives sont généralement vendus sans lubrifiant.

En general, los reductores Planetary Drives se suministran sin el lubricante.

Scelta del lubrificante in funzione della temperatura ambiente.

Choix du lubrifiant en fonction de la température ambiante.

Elección del lubricante en función de la temperatura ambiente.

Tabella 4 / Tableau 4 / Tabla 4

LUBRIFICANTE / LUBRIFIANT / LUBRICANTE									
	Olio Minerale / Huile Minerale / Aceite Mineral			Oli sintetici Poly- Alpha-Olefin Huiles synthétiques Poly-Alpha-Olefin Aceites sintéticos de Poli-Alfa-Olefina			Oli Sintetici Poliglicolici Huiles Synthétiques De Polyglycol Poliglicol Aceites Sintéticos		
Temperatura ambiente Température ambiante Temperatura ambiente	-10°C +30°C	+10°C +45°C	+30°C +60°C	-20°C +60°C			-20°C +60°C		
Fabbricante Fabricant Fabricante	ISO VG 150	ISO VG 220	ISO VG 320	ISO VG 150	ISO VG 220	ISO VG 320	ISO VG 150	ISO VG 220	ISO VG 320
AGIP	Blasia 150	Blasia 220	Blasia 320	-	Blasia SX 220	Blasia SX 320	Blasia S 150	Blasia S 220	Blasia S 320
BP	Energol GR-XP 150	Energol GR-XP 220	Energol GR-XP 320	Enersyn EPX 150	Enersyn EPX 220	Enersyn EPX 320	Enesyn SG 150	Enesyn SG 220	Enesyn SG 320
CASTROL	Alpha SP 150	Alpha SP 220	Alpha SP 320	Alphasyn EP 150	Alphasyn EP 220	Alphasyn EP 320	Alphasyn PG 150	Alphasyn PG 220	Alphasyn PG 320
CHEVRON	Ultra Gear 150	Ultra Gear 220	Ultra Gear 320	Tegra Synt. 150	Tegra Synt. 220	Tegra Synt. 320	HiPerSYN 150	HiPerSYN 220	HiPerSYN 320
ESSO	Spartan EP 150	Spartan EP 220	Spartan EP 320	Spartan S EP 150	Spartan S EP 220	Spartan S EP 320	Glycolube 150	Glycolube 220	Glycolube 320
KLUBER	Klüberoil GEM 1-150	Klüberoil GEM 1-220	Klüberoil GEM 1-320	Klübersynth EG 4-150	Klübersynth EG 4-220	Klübersynth EG 4-320	Klübersynth GH 6-150	Klübersynth GH 6-220	Klübersynth GH 6-320
MOBIL	Mobilgear XMP 150	Mobilgear XMP 220	Mobilgear XMP 320	Mobilgear SHC XMP 150	Mobilgear SHC XMP 220	Mobilgear SHC XMP 320	Glygoyle 22	Glygoyle 30	Glygoyle 22
SHELL	Omala 150	Omala 220	Omala 320	Omala HD 150	Omala HD 220	Omala HD 320	Tivela S150	Tivela S220	Tivela S320
TOTAL	Carter EP 150	Carter EP 220	Carter EP 320	Carter SH 150	Carter SH 220	Carter SH 320	Carter SY 150	Carter SY 220	Carter SY 320

TR YAĞLAMA

Redüktörlerdeki yağlayıcı miktarı [l]

NOT: Tablodaki değerler yaklaşık yağ miktarlarıdır. Bundan dolayı yağ doldurulurken seviye tapasından yağ miktarı kontrol edilmelidir.

EN LUBRICATION

Lubricant quantity inside the drives [l]

NOTE: The lubricant quantities shown in the table are indicative, but should be verified during the filling operation, checking the level through the service plug.

DE SCHMIERUNG

Fuellmenge Getriebeschmierung [l]

P.S. Die angegebenen Schmiermittelmengen sind indikativ und sind waehrend der Befuellung anhand der Oelstandsstopfen zu ueberpruefen.

IT LUBRIFICAZIONE

Quantita'di lubrificante contenuto nei riduttori [l]

NB. Le quantità di lubrificante riportate sono indicative e vanno controllate in fase di riempimento verificando il livello tramite l'apposito tappo di servizio.

FR LUBRIFICATION

Quantité de lubrifiant présente dans les réducteurs [l]

N.B. Les quantités sont indicatives et doivent être contrôlées en phase de remplissage en vérifiant le niveau par le biais du bouchon de service.

ES LUBRICACIÓN

Cantidad de lubricante contenido en los reductores [l]

Nota. Las cantidades de lubricante indicadas son aconsejables y se recomienda controlarlas durante el llenado verificando el nivel mediante los respectivos tapones de servicio.

M	B5	V1 / V3
PL 1001	0.50	0.90
PL 1002	0.70	1.20
PL 1003	1.00	1.70
PL 1004	1.30	2.20
PL 1601	0.50	1.00
PL 1602	0.70	1.30
PL 1603	1.00	1.80
PL 1604	1.30	2.20
PL 2501	1.10	1.90
PL 2502	1.20	2.30
PL 2503	1.60	2.80
PL 2504	1.80	3.20
PL 5001	1.10	1.90
PL 5002	1.40	2.30
PL 5003	1.60	2.70
PL 5004	1.80	3.10
PL 7001	-	-
PL 7002	-	-
PL 7003	-	-
PL 7004	-	-
PL 10001	2.90	5.30
PL 10002	3.20	5.90
PL 10003	3.50	6.50
PL 10004	3.70	6.90
PL 16001	3.10	5.80
PL 16002	3.40	6.30
PL 16003	3.80	6.80
PL 16004	4.00	7.30
PL 18002	4.00	7.30
PL 18003	4.40	8.20
PL 18004	4.80	8.60
PL 25001	7.60	14.20
PL 25002	6.50	12.20
PL 25003	7.00	12.20
PL 25004	7.20	13.40
PL 30002	7.50	13.90
PL 30003	7.70	14.40
PL 30004	8.00	14.90
PL 35001	7.50	13.70
PL 35002	7.30	13.30
PL 35003	7.60	14.00
PL 35004	7.90	14.50
PL 50001	10.30	19.10
PL 50002	10.10	18.80
PL 50003	11.50	18.70
PL 50004	10.80	20.10
PL 65001	-	-
PL 65002	14.00	26.10
PL 65003	13.00	23.90
PL 65004	13.30	24.60
PL 90001	-	-
PL 90002	22	41
PL 90003	20	37
PL 90004	20	37

P	B5	V1 / V3
PL 1001	0.60	1.00
PL 1002	0.80	1.50
PL 1003	1.00	1.90
PL 1004	1.20	2.30
PL 1601	0.60	1.10
PL 1602	0.80	1.50
PL 1603	1.10	1.90
PL 1604	1.40	2.40
PL 2501	1.30	2.30
PL 2502	1.40	2.70
PL 2503	1.70	3.10
PL 2504	1.90	3.60
PL 5001	1.20	2.10
PL 5002	1.50	2.60
PL 5003	1.70	3.00
PL 5004	1.90	3.50
PL 7001	2.00	3.50
PL 7002	2.40	4.40
PL 7003	2.70	4.80
PL 7004	2.90	5.20
PL 10001	-	-
PL 10002	-	-
PL 10003	-	-
PL 10004	-	-
PL 16001	3.60	6.70
PL 16002	3.90	7.30
PL 16003	4.20	7.90
PL 16004	4.40	8.30
PL 18002	4.60	8.50
PL 18003	5.00	9.30
PL 18004	5.30	9.70

F	B5	V1 / V3
PL 1001	0.50	0.90
PL 1002	0.70	1.20
PL 1003	1.00	1.70
PL 1004	1.30	2.20
PL 1601	0.50	1.00
PL 1602	0.70	1.30
PL 1603	1.00	1.80
PL 1604	1.30	2.20
PL 2501	0.90	1.50
PL 2502	1.00	1.90
PL 2503	1.20	2.30
PL 2504	1.40	2.70
PL 5001	0.80	1.40
PL 5002	1.10	1.90
PL 5003	1.30	2.30
PL 5004	1.60	2.70
PL 7001	1.70	3.00
PL 7002	2.10	3.80
PL 7003	2.40	4.30
PL 7004	2.60	4.70
PL 10001	1.70	3.10
PL 10002	2.10	3.90
PL 10003	2.40	4.40
PL 10004	2.60	4.80
PL 16001	2.10	3.80
PL 16002	2.60	4.40
PL 16003	2.80	5.00
PL 16004	3.00	5.40
PL 18002	3.10	5.60
PL 18003	3.60	6.40
PL 18004	3.90	6.80
PL 25001	5.90	10.70
PL 25002	4.50	8.20
PL 25003	5.40	9.70
PL 25004	5.60	10.10
PL 30002	5.60	10.40
PL 30003	6.00	11.10
PL 30004	6.40	11.60
PL 35001	5.40	9.90
PL 35002	5.20	9.60
PL 35003	5.60	10.30
PL 35004	5.90	10.80
PL 50001	8.30	15.50
PL 50002	8.20	15.40
PL 50003	8.60	16.10
PL 50004	8.90	16.70
PL 65001	-	-
PL 65002	12.40	23.50
PL 65003	11.70	22.00
PL 65004	11.80	22.40
PL 90001	-	-
PL 90002	18	32
PL 90003	16	29
PL 90004	17	30

FS	B5	V1 / V3
PL 1001	0.50	0.90
PL 1002	0.70	1.20
PL 1003	1.00	1.70
PL 1004	1.30	2.20
PL 1601	0.50	1.00
PL 1602	0.70	1.30
PL 1603	1.00	1.80
PL 1604	1.30	2.20
PL 2501	1.10	1.90
PL 2502	1.30	2.30
PL 2503	1.60	2.80
PL 2504	1.80	3.20
PL 5001	1.10	1.90
PL 5002	1.40	2.30
PL 5003	1.60	2.70
PL 5004	1.80	3.10
PL 7001	2.00	3.50
PL 7002	2.40	4.40
PL 7003	2.70	4.80
PL 7004	2.90	5.20
PL 10001	2.90	5.30
PL 10002	3.20	5.90
PL 10003	3.50	6.50
PL 10004	3.70	6.90
PL 16001	3.10	5.80
PL 16002	3.40	6.30
PL 16003	3.80	6.80
PL 16004	4.00	7.20
PL 18002	4.00	7.30
PL 18003	4.40	8.20
PL 18004	4.80	8.60
PL 25001	5.70	10.50
PL 25002	4.60	8.40
PL 25003	5.00	9.20
PL 25004	5.20	9.60
PL 30002	5.20	9.80
PL 30003	5.60	10.60
PL 30004	5.80	11.10
PL 35001	5.10	9.20
PL 35002	5.00	9.00
PL 35003	5.60	10.10
PL 35004	5.70	10.30
PL 50001	8.30	15.50
PL 50002	8.20	15.40
PL 50003	8.60	16.10
PL 50004	8.90	16.70
PL 65001	-	-
PL 65002	12.40	23.50
PL 65003	11.70	22.00
PL 65004	11.80	22.40
PL 90001	-	-
PL 90002	18	32
PL 90003	16	29
PL 90004	17	30

- Sayfa 51 bakınız / See page 51 / Siehe seite 51 / Vedere a pagina 51 / Voir page 51 / Consulte la página 51

TR YAĞLAMA

Redüktörlerdeki yağlayıcı miktarı [l]

NOT: Tablodaki değerler yaklaşık yağ miktarlarıdır. Bundan dolayı yağ doldurulurken seviye tapasından yağ miktarı kontrol edilmelidir.

EN LUBRICATION

Lubricant quantity inside the drives [l]

NOTE: The lubricant quantities shown in the table are indicative, but should be verified during the filling operation, checking the level through the service plug.

DE SCHMIERUNG

Fuellmenge Getriebeschmierung [l]

P.S. Die angegebenen Schmiermittelmengen sind indikativ und sind waehrend der Befuellung anhand der Oelstandsstopfen zu ueberpruefen.

IT LUBRIFICAZIONE

Quantita'di lubrificante contenuto nei riduttori [l]

NB. Le quantità di lubrificante riportate sono indicative e vanno controllate in fase di riempimento verificando il livello tramite l'apposito tappo di servizio.

FR LUBRIFICATION

Quantité de lubrifiant présente dans les réducteurs [l]

N.B. Les quantités sont indicatives et doivent être contrôlées en phase de remplissage en vérifiant le niveau par le biais du bouchon de service.

ES LUBRICACIÓN

Cantidad de lubricante contenido en los reductores [l]

Nota. Las cantidades de lubricante indicadas son aconsejables y se recomienda controlarlas durante el llenado verificando el nivel mediante los respectivos tapones de servicio.

M	B5	V1 / V3
PL 130001	13.5	-
PL 130002	14.9	29.8
PL 130003	16.1	32.2
PL 130004	16.6	33.2
PL 130005	16.9	33.8
PL 170001	14.5	-
PL 170002	16.9	33.8
PL 170003	18.3	36.6
PL 170004	18.8	37.6
PL 170005	19.1	38.2
PL 220001	21	42
PL 220002	23.4	46.8
PL 220003	24.8	49.6
PL 220004	25.3	50.6
PL 220005	25.6	51.2
PL 250001	20	40
PL 250002	25.2	50.4
PL 250003	26.6	53.2
PL 250004	27.5	55
PL 250005	27.9	55.8
PL 300001	42	84
PL 300002	46.5	93
PL 300003	47.9	95.8
PL 300004	48.7	97.4
PL 300005	49.1	98.2
PL 380001	44	88
PL 380002	49	98
PL 380003	50.4	100.8
PL 380004	51.3	102.6
PL 380005	51.7	103.4
PL 460001	44	88
PL 460002	50	100
PL 460003	52.4	104.8
PL 460004	53.8	107.6
PL 460005	54.3	108.6
PL 550001	70	140
PL 550002	80	160
PL 550003	82.4	164.8
PL 550004	83.8	167.6
PL 550005	84.3	168.6
PL 620001	67	134
PL 620002	77	154
PL 620003	79.4	158.8
PL 620004	80.8	161.6
PL 620005	81.3	162.6

F	B5	V1 / V3
PL 130001	14.3	-
PL 130002	15.7	31.4
PL 130003	16.9	33.8
PL 130004	17.4	34.8
PL 130005	17.7	35.4
PL 170001	14.5	29
PL 170002	16.9	33.8
PL 170003	18.3	36.6
PL 170004	18.8	37.6
PL 170005	19.1	38.2
PL 220001	21	42
PL 220002	23.4	46.8
PL 220003	24.8	49.6
PL 220004	25.3	50.6
PL 220005	25.6	51.2
PL 250001	20	40
PL 250002	25.2	50.4
PL 250003	26.6	53.2
PL 250004	27.5	55
PL 250005	27.9	55.8
PL 300001	42	84
PL 300002	46.5	93
PL 300003	47.9	95.8
PL 300004	48.7	97.4
PL 300005	49.1	98.2
PL 380001	44	88
PL 380002	49	98
PL 380003	50.4	100.8
PL 380004	51.3	102.6
PL 380005	51.7	103.4
PL 460001	44	88
PL 460002	50	100
PL 460003	52.4	104.8
PL 460004	53.8	107.6
PL 460005	54.3	108.6
PL 550001	70	140
PL 550002	80	160
PL 550003	82.4	164.8
PL 550004	83.8	167.6
PL 550005	84.3	168.6
PL 620001	67	134
PL 620002	77	154
PL 620003	79.4	158.8
PL 620004	80.8	161.6
PL 620005	81.3	162.6

FS	B5	V1 / V3
PL 130001	14.3	-
PL 130002	15.7	31.4
PL 130003	16.9	33.8
PL 130004	17.4	34.8
PL 130005	17.7	35.4
PL 170001	14.5	29
PL 170002	16.9	33.8
PL 170003	18.3	36.6
PL 170004	18.8	37.6
PL 170005	19.1	38.2
PL 220001	21	42
PL 220002	23.4	46.8
PL 220003	24.8	49.6
PL 220004	25.3	50.6
PL 220005	25.6	51.2
PL 250001	20	40
PL 250002	25.2	50.4
PL 250003	26.6	53.2
PL 250004	27.5	55
PL 250005	27.9	55.8
PL 300001	42	84
PL 300002	46.5	93
PL 300003	47.9	95.8
PL 300004	48.7	97.4
PL 300005	49.1	98.2
PL 380001	44	88
PL 380002	49	98
PL 380003	50.4	100.8
PL 380004	51.3	102.6
PL 380005	51.7	103.4
PL 460001	44	88
PL 460002	50	100
PL 460003	52.4	104.8
PL 460004	53.8	107.6
PL 460005	54.3	108.6
PL 550001	70	140
PL 550002	80	160
PL 550003	82.4	164.8
PL 550004	83.8	167.6
PL 550005	84.3	168.6
PL 620001	67	134
PL 620002	77	154
PL 620003	79.4	158.8
PL 620004	80.8	161.6
PL 620005	81.3	162.6

Giriş Tipi / Input Type / Eingabetyp Tipo di ingresso / Type d'entrée / Tipo de entrada	Yatay / Horizontal / Horizontale Orizzontale / Horizontale / Horizontal (lt)	Dikey / Vertical / Vertikale Verticale / Verticale / Vertical (lt)
ELC 28	0.2	0.3
ELC 42	0.2	0.3
EML 42	0.2	0.4
EML 1" 3/8 Z-6	0.2	0.4
EM 65	0.5	1.0
EM 1" 3/8 Z-6	0.5	1.0
EP 65	0.7	1.4
ET 90	1.9	3.8

- Eğer giriş şaftı kullanılıyorsa ilave yağ eklenmesi gerekmektedir.
- If the input shaft is used, additional oil must be added
- Wenn die Eingangswelle verwendet wird, muss zusätzliches Öl hinzugefügt werden
- Se si utilizza l'albero di ingresso, olio supplementare deve essere aggiunto
- Si l'arbre d'entrée est utilisé, de l'huile supplémentaire doit être ajoutée
- Si se utiliza el eje de entrada, se debe añadir aceite adicional

TR YAĞLAMA

Redüktörlerdeki yağlayıcı miktarı [l]

NOT: Tablodaki değerler yaklaşık yağ miktarlarıdır. Bundan dolayı yağ doldurulurken seviye tapasından yağ miktarı kontrol edilmelidir.

EN LUBRICATION

Lubricant quantity inside the drives [l]

NOTE: The lubricant quantities shown in the table are indicative, but should be verified during the filling operation, checking the level through the service plug.

DE SCHMIERUNG

Fuellmenge Getriebeschmierung [l]

P.S. Die angegebenen Schmiermittelmengen sind indikativ und sind waehrend der Befuellung anhand der Oelstandsstopfen zu ueberpruefen.

IT LUBRIFICAZIONE

Quantita'di lubrificante contenuto nei riduttori [l]

NB. Le quantità di lubrificante riportate sono indicative e vanno controllate in fase di riempimento verificando il livello tramite l'apposito tappo di servizio.

FR LUBRIFICATION

Quantité de lubrifiant présente dans les réducteurs [l]

N.B. Les quantités sont indicatives et doivent être contrôlées en phase de remplissage en vérifiant le niveau par le biais du bouchon de service.

ES LUBRICACIÓN

Cantidad de lubricante contenido en los reductores [l]

Nota. Las cantidades de lubricante indicadas son aconsejables y se recomienda controlarlas durante el llenado verificando el nivel mediante los respectivos tapones de servicio.

CPC	B3	B4	B6 / B7	V2 / V4
PL 1001	1.30	0.70	1.00	1.80
PL 1002	1.50	0.80	1.20	2.10
PL 1003	1.80	1.10	1.50	2.50
PL 1004	2.10	1.30	1.70	3.00
PL 1601	1.40	0.70	1.00	1.80
PL 1602	1.50	0.90	1.20	2.10
PL 1603	1.80	1.20	1.50	2.60
PL 1604	2.10	1.40	1.70	3.10
PL 2501	3.60	1.60	2.60	4.90
PL 2502	3.90	1.90	2.90	5.30
PL 2503	4.10	2.10	3.10	5.80
PL 2504	4.30	2.40	3.40	6.20
PL 5001	3.50	1.50	2.50	4.70
PL 5002	3.80	1.80	2.80	5.20
PL 5003	4.10	2.10	3.10	5.70
PL 5004	4.30	2.30	3.30	6.10
PL 7001	7.40	2.80	5.20	9.70
PL 7002	7.80	3.30	5.70	10.60
PL 7003	8.00	3.40	5.80	10.80
PL 7004	8.30	3.70	6.10	11.40
PL 10001	9.50	3.70	6.70	12.70
PL 10002	9.90	4.10	7.10	13.30
PL 10003	10.20	4.40	7.40	13.90
PL 10004	10.40	4.60	7.60	14.30
PL 16001	9.70	3.90	6.80	12.90
PL 16002	10.00	4.20	7.10	13.60
PL 16003	10.30	4.50	7.40	14.10
PL 16004	10.60	4.80	7.70	14.50
PL 18002	10.80	4.70	7.90	14.70
PL 18003	11.20	5.20	8.40	15.50
PL 18004	11.50	5.50	8.60	16.00
PL 25001	7.60	7.60	7.60	14.20
PL 25002	6.50	6.50	6.50	12.20
PL 25003	7.00	7.00	7.00	13.00
PL 25004	7.20	7.20	7.20	13.40
PL 30002	7.50	7.50	7.50	13.90
PL 30003	7.70	7.70	7.70	14.40
PL 30004	8.00	8.00	8.00	14.90
PL 35001	7.50	7.50	7.50	13.70
PL 35002	7.30	7.30	7.30	13.30
PL 35003	7.60	7.60	7.60	14.00
PL 35004	7.90	7.90	7.90	14.50
PL 50001	10.30	10.30	10.30	19.10
PL 50002	10.10	10.10	10.10	18.80
PL 50003	10.10	10.10	10.10	18.70
PL 50004	10.80	10.80	10.80	20.10
PL 65001	-	-	-	-
PL 65002	14.00	14.00	14.00	26.10
PL 65003	13.00	13.00	13.00	23.90
PL 65004	13.30	13.30	13.30	24.60
PL 90001	-	-	-	-
PL 90002	22	22	22	41
PL 90003	20	20	20	37
PL 90004	20	20	20	37

- Sayfa 51 bakınız / See page 51 / Siehe seite 51 / Vedere a pagina 51 / Voir page 51 / Consulte la página 51

TR YAĞLAMA

Redüktörlerdeki yağlayıcı miktarı [l]

NOT: Tablodaki değerler yaklaşık yağ miktarlarıdır. Bundan dolayı yağ doldurulurken seviye tapasından yağ miktarı kontrol edilmelidir.

EN LUBRICATION

Lubricant quantity inside the drives [l]

NOTE: The lubricant quantities shown in the table are indicative, but should be verified during the filling operation, checking the level through the service plug.

DE SCHMIERUNG

Fuellmenge Getriebeschmierung [l]

P.S. Die angegebenen Schmiermittelmengen sind indikativ und sind waehrend der Befuellung anhand der Oelstandsstopfen zu ueberpruefen.

IT LUBRIFICAZIONE

Quantita'di lubrificante contenuto nei riduttori [l]

NB. Le quantità di lubrificante riportate sono indicative e vanno controllate in fase di riempimento verificando il livello tramite l'apposito tappo di servizio.

FR LUBRIFICATION

Quantité de lubrifiant présente dans les réducteurs [l]

N.B. Les quantités sont indicatives et doivent être contrôlées en phase de remplissage en vérifiant le niveau par le biais du bouchon de service.

ES LUBRICACIÓN

Cantidad de lubricante contenido en los reductores [l]

Nota. Las cantidades de lubricante indicadas son aconsejables y se recomienda controlarlas durante el llenado verificando el nivel mediante los respectivos tapones de servicio.

M	B51	B55	B53	B54	V15	V16	V17	V18	V35	V36	V37	V38
PLB 1002	1.90	1.20	1.40	1.20	1.60	1.60	1.60	1.60	1.90	1.90	1.90	1.90
PLB 1003	2.20	1.40	1.60	1.40	1.90	1.90	1.90	1.90	2.20	2.20	2.20	2.20
PLB 1004	2.70	1.70	1.90	1.70	2.40	2.40	2.40	2.40	2.70	2.70	2.70	2.70
PLB 1602	2.00	1.20	1.40	1.20	1.70	1.70	1.70	1.70	2.00	2.00	2.00	2.00
PLB 1603	2.30	1.40	1.60	1.40	2.00	2.00	2.00	2.00	2.30	2.30	2.30	2.30
PLB 1604	2.80	1.70	1.90	1.70	2.50	2.50	2.50	2.50	2.80	2.80	2.80	2.80
PLB 2502	2.90	1.80	2.00	1.80	2.60	2.60	2.60	2.60	2.90	2.90	2.90	2.90
PLB 2503	3.30	1.90	2.10	1.90	3.00	3.00	3.00	3.00	3.30	3.30	3.30	3.30
PLB 2504	3.80	2.30	2.50	2.30	3.50	3.50	3.50	3.50	3.80	3.80	3.80	3.80
PLB 5002	5.20	2.90	3.30	2.90	3.70	3.70	3.70	3.70	5.20	5.20	5.20	5.20
PLB 5003	3.30	2.10	2.30	2.10	3.00	3.00	3.00	3.00	3.30	3.30	3.30	3.30
PLB 5004	3.70	2.30	2.50	2.30	3.40	3.40	3.40	3.40	3.70	3.70	3.70	3.70
PLB 7002	-	-	-	-	-	-	-	-	-	-	-	-
PLB 7003	-	-	-	-	-	-	-	-	-	-	-	-
PLB 7004	-	-	-	-	-	-	-	-	-	-	-	-
PLB 10002	8.60	4.70	5.10	4.70	7.10	7.10	7.10	7.10	8.60	8.60	8.60	8.60
PLB 10003	9.20	5.00	5.40	5.00	7.70	7.70	7.70	7.70	9.20	9.20	9.20	9.20
PLB 10004	7.50	4.20	4.40	4.20	7.20	7.20	7.20	7.20	7.50	7.50	7.50	7.50
PLB 16002	9.10	4.90	5.30	4.90	7.60	7.60	7.60	7.60	9.10	9.10	9.10	9.10
PLB 16003	9.60	5.20	5.60	5.20	8.10	8.10	8.10	8.10	9.60	9.60	9.60	9.60
PLB 16004	7.80	4.50	4.70	4.50	7.50	7.50	7.50	7.50	7.80	7.80	7.80	7.80
PLB 18002	15.60	8.60	9.00	8.60	13.30	13.30	13.30	13.30	15.60	15.60	15.60	15.60
PLB 18003	10.60	5.80	6.20	5.80	9.10	9.10	9.10	9.10	10.60	10.60	10.60	10.60
PLB 18004	11.50	6.20	6.60	6.20	10.00	10.00	10.00	10.00	11.50	11.50	11.50	11.50
PLB 25002	18.50	10.00	10.20	10.00	15.60	15.60	15.60	15.60	18.50	18.50	18.50	18.50
PLB 25003	15.50	8.30	8.70	8.30	14.00	14.00	14.00	14.00	15.50	15.50	15.50	15.50
PLB 25004	15.50	8.80	9.20	8.80	14.00	14.00	14.00	14.00	15.50	15.50	15.50	15.50
PLB 30003	23.70	12.60	12.80	12.60	21.40	21.40	21.40	21.40	23.70	23.70	23.70	23.70
PLB 30004	17.70	9.50	9.90	9.50	16.20	16.20	16.20	16.20	17.70	17.70	17.70	17.70
PLB 35002	17.70	9.70	9.90	9.70	14.80	14.80	14.80	14.80	17.70	17.70	17.70	17.70
PLB 35003	23.40	12.70	13.10	12.70	21.10	21.10	21.10	21.10	23.40	23.40	23.40	23.40
PLB 35004	17.30	9.40	9.80	9.40	15.80	15.80	15.80	15.80	17.30	17.30	17.30	17.30
PLB 50002	28.30	15.40	15.60	15.40	25.90	25.90	25.90	25.90	28.30	28.30	28.30	28.30
PLB 50003	22.10	11.90	12.30	11.90	20.60	20.60	20.60	20.60	22.10	22.10	22.10	22.10
PLB 50004	22.00	13.30	13.70	13.30	20.50	20.50	20.50	20.50	22.00	22.00	22.00	22.00
PLB 65003	30.20	16.10	16.30	16.10	27.30	27.30	27.30	27.30	30.20	30.20	30.20	30.20
PLB 65004	27.20	14.80	15.20	14.80	25.70	25.70	25.70	25.70	27.20	27.20	27.20	27.20
PLB 90003	44.50	22.30	22.50	22.30	41.60	41.60	41.60	41.60	44.50	44.50	44.50	44.50
PLB 90004	40.30	21.80	22.20	21.80	38.80	38.80	38.80	38.80	40.30	40.30	40.30	40.30
PLB 130003	35.80	17.90	*	17.90	*	*	*	*	35.80	35.80	35.80	35.80
PLB 130004	38.20	19.10	*	19.10	*	*	*	*	38.20	38.20	38.20	38.20
PLB 130005	37.20	18.60	*	18.60	*	*	*	*	37.20	37.20	37.20	37.20
PLB 170003	39.80	19.90	*	19.90	*	*	*	*	39.80	39.80	39.80	39.80
PLB 170004	42.60	21.30	*	21.30	*	*	*	*	42.60	42.60	42.60	42.60
PLB 170005	41.60	20.80	*	20.80	*	*	*	*	41.60	41.60	41.60	41.60
PLB 220003	52.80	26.40	*	26.40	*	*	*	*	52.80	52.80	52.80	52.80
PLB 220004	55.60	27.80	*	27.80	*	*	*	*	55.60	55.60	55.60	55.60
PLB 220005	54.60	27.30	*	27.30	*	*	*	*	54.60	54.60	54.60	54.60
PLB 250004	59.20	29.60	*	29.60	*	*	*	*	59.20	59.20	59.20	59.20
PLB 250005	59.00	29.50	*	29.50	*	*	*	*	59.00	59.00	59.00	59.00
PLB 300004	101.80	50.90	*	50.90	*	*	*	*	101.80	101.80	101.80	101.80
PLB 300005	101.40	50.70	*	50.70	*	*	*	*	101.40	101.40	101.40	101.40
PLB 380005	108.60	54.30	*	54.30	*	*	*	*	108.60	108.60	108.60	108.60
PLB 460005	113.60	56.80	*	56.80	*	*	*	*	113.60	113.60	113.60	113.60
PLB 550005	173.60	86.80	*	86.80	*	*	*	*	173.60	173.60	173.60	173.60
PLB 620005	167.60	83.80	*	83.80	*	*	*	*	167.60	167.60	167.60	167.60

- Sayfa 51 bakınız / See page 51 / Siehe seite 51 / Vedere a pagina 51 / Voir page 51 / Consulte la página 51

* Lütfen PGR'ye danışınız / Please consult PGR / Bitte konsultieren PGR / Si prega di consultare PGR / S'il vous plaît consulter PGR / Por favor consulte PGR.

PGR DRIVE TECHNOLOGIES

TR YAĞLAMA

Redüktörlerdeki yağlayıcı miktarı [l]

NOT: Tablodaki değerler yaklaşık yağ miktarlarıdır. Bundan dolayı yağ doldurulurken seviye tapasından yağ miktarı kontrol edilmelidir.

EN LUBRICATION

Lubricant quantity inside the drives [l]

NOTE: The lubricant quantities shown in the table are indicative, but should be verified during the filling operation, checking the level through the service plug.

DE SCHMIERUNG

Fuellmenge Getriebeschmierung [l]

P.S. Die angegebenen Schmiermittelmengen sind indikativ und sind waehrend der Befuellung anhand der Oelstandsstopfen zu ueberpruefen.

IT LUBRIFICAZIONE

Quantita'di lubrificante contenuto nei riduttori [l]

NB. Le quantità di lubrificante riportate sono indicative e vanno controllate in fase di riempimento verificando il livello tramite l'apposito tappo di servizio.

FR LUBRIFICATION

Quantité de lubrifiant présente dans les réducteurs [l]

N.B. Les quantités sont indicatives et doivent être contrôlées en phase de remplissage en vérifiant le niveau par le biais du bouchon de service.

ES LUBRICACIÓN

Cantidad de lubricante contenido en los reductores [l]

Nota. Las cantidades de lubricante indicadas son aconsejables y se recomienda controlarlas durante el llenado verificando el nivel mediante los respectivos tapones de servicio.

P	B51	B55	B53	B54	V15	V16	V17	V18	V35	V36	V37	V38
PLB 1002	2.00	1.30	1.50	1.30	1.70	1.70	1.70	1.70	2.00	2.00	2.00	2.00
PLB 1003	2.50	1.50	1.70	1.50	2.20	2.20	2.20	2.20	2.50	2.50	2.50	2.50
PLB 1004	2.90	1.70	1.90	1.70	2.60	2.60	2.60	2.60	2.90	2.90	2.90	2.90
PLB 1602	2.10	1.30	1.50	1.30	1.80	1.80	1.80	1.80	2.10	2.10	2.10	2.10
PLB 1603	2.50	1.50	1.70	1.50	2.20	2.20	2.20	2.20	2.50	2.50	2.50	2.50
PLB 1604	2.90	1.80	2.00	1.80	2.60	2.60	2.60	2.60	2.90	2.90	2.90	2.90
PLB 2502	3.30	2.00	2.20	2.00	3.00	3.00	3.00	3.00	3.30	3.30	3.30	3.30
PLB 2503	3.70	2.10	2.30	2.10	3.40	3.40	3.40	3.40	3.70	3.70	3.70	3.70
PLB 2504	4.10	2.40	2.60	2.40	3.80	3.80	3.80	3.80	4.10	4.10	4.10	4.10
PLB 5002	5.40	3.00	3.40	3.00	3.90	3.90	3.90	3.90	5.40	5.40	5.40	5.40
PLB 5003	3.60	2.20	2.40	2.20	3.30	3.30	3.30	3.30	3.60	3.60	3.60	3.60
PLB 5004	4.00	2.40	2.60	2.40	3.70	3.70	3.70	3.70	4.00	4.00	4.00	4.00
PLB 7002	6.80	3.80	4.20	3.80	5.30	5.30	5.30	5.30	6.80	6.80	6.80	6.80
PLB 7003	5.40	3.10	3.30	3.10	5.10	5.10	5.10	5.10	5.40	5.40	5.40	5.40
PLB 7004	5.80	3.40	3.60	3.40	5.50	5.50	5.50	5.50	5.80	5.80	5.80	5.80
PLB 10002	-	-	-	-	-	-	-	-	-	-	-	-
PLB 10003	-	-	-	-	-	-	-	-	-	-	-	-
PLB 10004	-	-	-	-	-	-	-	-	-	-	-	-
PLB 16002	10.00	5.40	5.80	5.40	8.50	8.50	8.50	8.50	10.00	10.00	10.00	10.00
PLB 16003	10.60	5.70	6.10	5.70	9.10	9.10	9.10	9.10	10.60	10.60	10.60	10.60
PLB 16004	8.90	4.90	5.10	4.90	8.60	8.60	8.60	8.60	8.90	8.90	8.90	8.90
PLB 18002	16.60	9.20	9.60	9.20	14.30	14.30	14.30	14.30	16.60	16.60	16.60	16.60
PLB 18003	11.80	6.40	6.80	6.40	10.30	10.30	10.30	10.30	11.80	11.80	11.80	11.80
PLB 18004	12.60	6.80	7.20	6.80	11.10	11.10	11.10	11.10	12.60	12.60	12.60	12.60

- Sayfa 51 bakınız / See page 51 / Siehe seite 51 / Vedere a pagina 51 / Voir page 51 / Consulte la página 51

TR YAĞLAMA

Redüktörlerdeki yağlayıcı miktarı [l]

NOT: Tablodaki değerler yaklaşık yağ miktarlarıdır. Bundan dolayı yağ doldurulurken seviye tapasından yağ miktarı kontrol edilmelidir.

EN LUBRICATION

Lubricant quantity inside the drives [l]

NOTE: The lubricant quantities shown in the table are indicative, but should be verified during the filling operation, checking the level through the service plug.

DE SCHMIERUNG

Fuellmenge Getriebeschmierung [l]

P.S. Die angegebenen Schmiermittelmengen sind indikativ und sind waehrend der Befuellung anhand der Oelstandsstopfen zu ueberpruefen.

IT LUBRIFICAZIONE

Quantita'di lubrificante contenuto nei riduttori [l]

NB. Le quantità di lubrificante riportate sono indicative e vanno controllate in fase di riempimento verificando il livello tramite l'apposito tappo di servizio.

FR LUBRIFICATION

Quantité de lubrifiant présente dans les réducteurs [l]

N.B. Les quantités sont indicatives et doivent être contrôlées en phase de remplissage en vérifiant le niveau par le biais du bouchon de service.

ES LUBRICACIÓN

Cantidad de lubricante contenido en los reductores [l]

Nota. Las cantidades de lubricante indicadas son aconsejables y se recomienda controlarlas durante el llenado verificando el nivel mediante los respectivos tapones de servicio.

F	B51	B55	B53	B54	V15	V16	V17	V18	V35	V36	V37	V38
PLB 1002	1.90	1.20	1.40	1.20	1.60	1.60	1.60	1.60	1.90	1.90	1.90	1.90
PLB 1003	2.20	1.40	1.60	1.40	1.90	1.90	1.90	1.90	2.20	2.20	2.20	2.20
PLB 1004	2.70	1.70	1.90	1.70	2.40	2.40	2.40	2.40	2.70	2.70	2.70	2.70
PLB 1602	2.00	1.20	1.40	1.20	1.70	1.70	1.70	1.70	2.00	2.00	2.00	2.00
PLB 1603	2.30	1.40	1.60	1.40	2.00	2.00	2.00	2.00	2.30	2.30	2.30	2.30
PLB 1604	2.80	1.70	1.90	1.70	2.50	2.50	2.50	2.50	2.80	2.80	2.80	2.80
PLB 2502	2.50	1.60	1.80	1.60	2.20	2.20	2.20	2.20	2.50	2.50	2.50	2.50
PLB 2503	2.90	1.90	2.10	1.90	2.60	2.60	2.60	2.60	2.90	2.90	2.90	2.90
PLB 2504	3.30	1.90	2.10	1.90	3.00	3.00	3.00	3.00	3.30	3.30	3.30	3.30
PLB 5002	4.70	2.60	3.00	2.60	3.20	3.20	3.20	3.20	4.70	4.70	4.70	4.70
PLB 5003	2.90	1.80	2.00	1.80	2.60	2.60	2.60	2.60	2.90	2.90	2.90	2.90
PLB 5004	3.30	2.00	2.20	2.00	3.00	3.00	3.00	3.00	3.30	3.30	3.30	3.30
PLB 7002	6.30	3.50	3.90	3.50	4.80	4.80	4.80	4.80	6.30	6.30	6.30	6.30
PLB 7003	4.80	2.80	3.00	2.80	4.50	4.50	4.50	4.50	4.80	4.80	4.80	4.80
PLB 7004	5.30	3.10	3.30	3.10	5.00	5.00	5.00	5.00	5.30	5.30	5.30	5.30
PLB 10002	6.40	3.50	3.90	3.50	4.90	4.90	4.90	4.90	6.40	6.40	6.40	6.40
PLB 10003	7.20	3.90	4.30	3.90	5.70	5.70	5.70	5.70	7.20	7.20	7.20	7.20
PLB 10004	5.40	3.10	3.30	3.10	5.10	5.10	5.10	5.10	5.40	5.40	5.40	5.40
PLB 16002	7.10	3.90	4.30	3.90	5.60	5.60	5.60	5.60	7.10	7.10	7.10	7.10
PLB 16003	7.70	4.40	4.80	4.40	6.20	6.20	6.20	6.20	7.70	7.70	7.70	7.70
PLB 16004	6.00	3.50	3.70	3.50	5.70	5.70	5.70	5.70	6.00	6.00	6.00	6.00
PLB 18002	13.70	7.70	8.10	7.70	11.40	11.40	11.40	11.40	13.70	13.70	13.70	13.70
PLB 18003	8.90	4.90	5.30	4.90	7.40	7.40	7.40	7.40	8.90	8.90	8.90	8.90
PLB 18004	9.70	5.40	5.80	5.40	8.20	8.20	8.20	8.20	9.70	9.70	9.70	9.70
PLB 25002	14.90	8.10	8.30	8.10	12.00	12.00	12.00	12.00	14.90	14.90	14.90	14.90
PLB 25003	11.50	6.30	6.70	6.30	10.00	10.00	10.00	10.00	11.50	11.50	11.50	11.50
PLB 25004	13.00	7.20	7.60	7.20	12.50	12.50	12.50	12.50	13.00	13.00	13.00	13.00
PLB 30003	20.40	11.20	11.40	11.20	18.10	18.10	18.10	18.10	20.40	20.40	20.40	20.40
PLB 30004	14.40	7.80	8.20	7.80	12.90	12.90	12.90	12.90	14.40	14.40	14.40	14.40
PLB 35002	14.50	8.00	8.20	8.00	11.60	11.60	11.60	11.60	14.50	14.50	14.50	14.50
PLB 35003	19.50	10.70	11.10	10.70	17.20	17.20	17.20	17.20	19.50	19.50	19.50	19.50
PLB 35004	13.60	7.40	7.80	7.40	12.10	12.10	12.10	12.10	13.60	13.60	13.60	13.60
PLB 50002	24.80	13.40	13.60	13.40	22.40	22.40	22.40	22.40	24.80	24.80	24.80	24.80
PLB 50003	18.70	10.00	10.40	10.00	17.20	17.20	17.20	17.20	18.70	18.70	18.70	18.70
PLB 50004	19.40	10.40	10.70	10.40	17.90	17.90	17.90	17.90	19.40	19.40	19.40	19.40
PLB 65003	27.90	14.90	15.10	14.90	25.00	25.00	25.00	25.00	27.90	27.90	27.90	27.90
PLB 65004	25.30	13.50	13.90	13.50	23.80	23.80	23.80	23.80	25.30	25.30	25.30	25.30
PLB 90003	35.00	18.30	18.50	18.30	32.10	32.10	32.10	32.10	35.00	35.00	35.00	35.00
PLB 90004	32.30	17.80	18.20	17.80	30.80	30.80	30.80	30.80	32.30	32.30	32.30	32.30
PLB 130003	37.40	18.70	*	18.70	*	*	*	*	37.40	37.40	37.40	37.40
PLB 130004	39.80	19.90	*	19.90	*	*	*	*	39.80	39.80	39.80	39.80
PLB 130005	38.80	19.40	*	19.40	*	*	*	*	38.80	38.80	38.80	38.80
PLB 170003	39.80	19.90	*	19.90	*	*	*	*	39.80	39.80	39.80	39.80
PLB 170004	42.60	21.30	*	21.30	*	*	*	*	42.60	42.60	42.60	42.60
PLB 170005	41.60	20.80	*	20.80	*	*	*	*	41.60	41.60	41.60	41.60
PLB 220003	52.80	26.40	*	26.40	*	*	*	*	52.80	52.80	52.80	52.80
PLB 220004	55.60	27.80	*	27.80	*	*	*	*	55.60	55.60	55.60	55.60
PLB 220005	54.60	27.30	*	27.30	*	*	*	*	54.60	54.60	54.60	54.60
PLB 250004	59.20	29.60	*	29.60	*	*	*	*	59.20	59.20	59.20	59.20
PLB 250005	59.00	29.50	*	29.50	*	*	*	*	59.00	59.00	59.00	59.00
PLB 300004	101.80	50.90	*	50.90	*	*	*	*	101.80	101.80	101.80	101.80
PLB 300005	101.40	50.70	*	50.70	*	*	*	*	101.40	101.40	101.40	101.40
PLB 380005	108.60	54.30	*	54.30	*	*	*	*	108.60	108.60	108.60	108.60
PLB 460005	113.60	56.80	*	56.80	*	*	*	*	113.60	113.60	113.60	113.60
PLB 550005	173.60	86.80	*	86.80	*	*	*	*	173.60	173.60	173.60	173.60
PLB 620005	167.60	83.80	*	83.80	*	*	*	*	167.60	167.60	167.60	167.60

- Sayfa 51 bakınız / See page 51 / Siehe seite 51 / Vedere a pagina 51 / Voir page 51 / Consulte la página 51

* Lütfen PGR'ye danışınız / Please consult PGR / Bitte konsultieren PGR / Si prega di consultare PGR / S'il vous plaît consulter PGR / Por favor consulte PGR.

TR YAĞLAMA

Redüktörlerdeki yağlayıcı miktarı [l]

NOT: Tablodaki değerler yaklaşık yağ miktarlarıdır. Bundan dolayı yağ doldurulurken seviye tapasından yağ miktarı kontrol edilmelidir.

EN LUBRICATION

Lubricant quantity inside the drives [l]

NOTE: The lubricant quantities shown in the table are indicative, but should be verified during the filling operation, checking the level through the service plug.

DE SCHMIERUNG

Fuellmenge Getriebeschmierung [l]

P.S. Die angegebenen Schmiermittelmengen sind indikativ und sind waehrend der Befuellung anhand der Oelstandsstopfen zu ueberpruefen.

IT LUBRIFICAZIONE

Quantita'di lubrificante contenuto nei riduttori [l]

NB. Le quantità di lubrificante riportate sono indicative e vanno controllate in fase di riempimento verificando il livello tramite l'apposito tappo di servizio.

FR LUBRIFICATION

Quantité de lubrifiant présente dans les réducteurs [l]

N.B. Les quantités sont indicatives et doivent être contrôlées en phase de remplissage en vérifiant le niveau par le biais du bouchon de service.

ES LUBRICACIÓN

Cantidad de lubricante contenido en los reductores [l]

Nota. Las cantidades de lubricante indicadas son aconsejables y se recomienda controlarlas durante el llenado verificando el nivel mediante los respectivos tapones de servicio.

FS	B51	B55	B53	B54	V15	V16	V17	V18	V35	V36	V37	V38
PLB 1002	1.90	1.20	1.40	1.20	1.60	1.60	1.60	1.60	1.90	1.90	1.90	1.90
PLB 1003	2.20	1.40	1.60	1.40	1.90	1.90	1.90	1.90	2.20	2.20	2.20	2.20
PLB 1004	2.70	1.70	1.90	1.70	2.40	2.40	2.40	2.40	2.70	2.70	2.70	2.70
PLB 1602	2.00	1.20	1.40	1.20	1.70	1.70	1.70	1.70	2.00	2.00	2.00	2.00
PLB 1603	2.30	1.40	1.60	1.40	2.00	2.00	2.00	2.00	2.30	2.30	2.30	2.30
PLB 1604	2.80	1.70	1.90	1.70	2.50	2.50	2.50	2.50	2.80	2.80	2.80	2.80
PLB 2502	2.90	1.80	2.00	1.80	2.60	2.60	2.60	2.60	2.90	2.90	2.90	2.90
PLB 2503	3.30	2.20	2.40	2.20	3.00	3.00	3.00	3.00	3.30	3.30	3.30	3.30
PLB 2504	3.80	2.30	2.50	2.30	3.50	3.50	3.50	3.50	3.80	3.80	3.80	3.80
PLB 5002	5.20	2.90	3.30	2.90	3.70	3.70	3.70	3.70	5.20	5.20	5.20	5.20
PLB 5003	3.30	2.10	2.30	2.10	3.00	3.00	3.00	3.00	3.30	3.30	3.30	3.30
PLB 5004	3.70	2.30	2.50	2.30	3.40	3.40	3.40	3.40	3.70	3.70	3.70	3.70
PLB 7002	6.80	3.80	4.20	3.80	5.30	5.30	5.30	5.30	6.80	6.80	6.80	6.80
PLB 7003	5.40	3.10	3.30	3.10	5.10	5.10	5.10	5.10	5.40	5.40	5.40	5.40
PLB 7004	5.80	3.40	3.60	3.40	5.50	5.50	5.50	5.50	5.80	5.80	5.80	5.80
PLB 10002	8.60	4.70	5.10	4.70	7.10	7.10	7.10	7.10	8.60	8.60	8.60	8.60
PLB 10003	9.20	5.00	5.40	5.00	7.70	7.70	7.70	7.70	9.20	9.20	9.20	9.20
PLB 10004	7.50	4.20	4.40	4.20	7.20	7.20	7.20	7.20	7.50	7.50	7.50	7.50
PLB 16002	9.10	4.90	5.30	4.90	7.60	7.60	7.60	7.60	9.10	9.10	9.10	9.10
PLB 16003	9.60	5.20	5.60	5.20	8.10	8.10	8.10	8.10	9.60	9.60	9.60	9.60
PLB 16004	7.80	4.50	4.70	4.50	7.50	7.50	7.50	7.50	7.80	7.80	7.80	7.80
PLB 18002	15.60	8.60	9.00	8.60	13.30	13.30	13.30	13.30	15.60	15.60	15.60	15.60
PLB 18003	10.60	5.80	6.20	5.80	9.10	9.10	9.10	9.10	10.60	10.60	10.60	10.60
PLB 18004	11.50	6.20	6.60	6.20	10.00	10.00	10.00	10.00	11.50	11.50	11.50	11.50
PLB 25002	14.70	8.00	8.20	8.00	11.80	11.80	11.80	11.80	14.70	14.70	14.70	14.70
PLB 25003	11.70	6.40	6.80	6.40	10.20	10.20	10.20	10.20	11.70	11.70	11.70	11.70
PLB 25004	12.50	6.80	7.20	6.80	11.00	11.00	11.00	11.00	12.50	12.50	12.50	12.50
PLB 30003	19.90	11.00	11.20	11.00	17.60	17.60	17.60	17.60	19.90	19.90	19.90	19.90
PLB 30004	13.90	7.40	7.80	7.40	12.40	12.40	12.40	12.40	13.90	13.90	13.90	13.90
PLB 35002	14.00	7.70	7.90	7.70	11.10	11.10	11.10	11.10	14.00	14.00	14.00	14.00
PLB 35003	19.30	10.50	10.90	10.50	17.00	17.00	17.00	17.00	19.30	19.30	19.30	19.30
PLB 35004	13.40	7.40	7.80	7.40	11.90	11.90	11.90	11.90	13.40	13.40	13.40	13.40
PLB 50002	24.80	13.40	13.60	13.40	22.40	22.40	22.40	22.40	24.80	24.80	24.80	24.80
PLB 50003	18.70	10.00	10.40	10.00	17.20	17.20	17.20	17.20	18.70	18.70	18.70	18.70
PLB 50004	19.40	10.40	10.70	10.40	17.90	17.90	17.90	17.90	19.40	19.40	19.40	19.40
PLB 65003	27.90	14.90	15.10	14.90	25.00	25.00	25.00	25.00	27.90	27.90	27.90	27.90
PLB 65004	25.30	13.50	13.90	13.50	23.80	23.80	23.80	23.80	25.30	25.30	25.30	25.30
PLB 90003	35.00	18.30	18.50	18.30	32.10	32.10	32.10	32.10	35.00	35.00	35.00	35.00
PLB 90004	32.30	17.80	18.20	17.80	30.80	30.80	30.80	30.80	32.30	32.30	32.30	32.30
PLB 130003	37.40	18.70	*	18.70	*	*	*	*	37.40	37.40	37.40	37.40
PLB 130004	39.80	19.90	*	19.90	*	*	*	*	39.80	39.80	39.80	39.80
PLB 130005	38.80	19.40	*	19.40	*	*	*	*	38.80	38.80	38.80	38.80
PLB 170003	39.80	19.90	*	19.90	*	*	*	*	39.80	39.80	39.80	39.80
PLB 170004	42.60	21.30	*	21.30	*	*	*	*	42.60	42.60	42.60	42.60
PLB 170005	41.60	20.80	*	20.80	*	*	*	*	41.60	41.60	41.60	41.60
PLB 220003	52.80	26.40	*	26.40	*	*	*	*	52.80	52.80	52.80	52.80
PLB 220004	55.60	27.80	*	27.80	*	*	*	*	55.60	55.60	55.60	55.60
PLB 220005	54.60	27.30	*	27.30	*	*	*	*	54.60	54.60	54.60	54.60
PLB 250004	59.20	29.60	*	29.60	*	*	*	*	59.20	59.20	59.20	59.20
PLB 250005	59.00	29.50	*	29.50	*	*	*	*	59.00	59.00	59.00	59.00
PLB 300004	101.80	50.90	*	50.90	*	*	*	*	101.80	101.80	101.80	101.80
PLB 300005	101.40	50.70	*	50.70	*	*	*	*	101.40	101.40	101.40	101.40
PLB 380005	108.60	54.30	*	54.30	*	*	*	*	108.60	108.60	108.60	108.60
PLB 460005	113.60	56.80	*	56.80	*	*	*	*	113.60	113.60	113.60	113.60
PLB 550005	173.60	86.80	*	86.80	*	*	*	*	173.60	173.60	173.60	173.60
PLB 620005	167.60	83.80	*	83.80	*	*	*	*	167.60	167.60	167.60	167.60

- Sayfa 51 bakınız / See page 51 / Siehe seite 51 / Vedere a pagina 51 / Voir page 51 / Consulte la página 51

* Lütfen PGR'ye danışınız / Please consult PGR / Bitte konsultieren PGR / Si prega di consultare PGR / S'il vous plaît consulter PGR / Por favor consulte PGR.

TR YAĞLAMA

Redüktörlerdeki yağlayıcı miktarı [l]

NOT: Tablodaki değerler yaklaşık yağ miktarlarıdır. Bundan dolayı yağ doldurulurken seviye tapasından yağ miktarı kontrol edilmelidir.

EN LUBRICATION

Lubricant quantity inside the drives [l]

NOTE: The lubricant quantities shown in the table are indicative, but should be verified during the filling operation, checking the level through the service plug.

DE SCHMIERUNG

Fuellmenge Getriebeschmierung [l]

P.S. Die angegebenen Schmiermittelmengen sind indikativ und sind waehrend der Befuellung anhand der Oelstandsstopfen zu ueberpruefen.

IT LUBRIFICAZIONE

Quantita'di lubrificante contenuto nei riduttori [l]

NB. Le quantità di lubrificante riportate sono indicative e vanno controllate in fase di riempimento verificando il livello tramite l'apposito tappo di servizio.

FR LUBRIFICATION

Quantité de lubrifiant présente dans les réducteurs [l]

N.B. Les quantités sont indicatives et doivent être contrôlées en phase de remplissage en vérifiant le niveau par le biais du bouchon de service.

ES LUBRICACIÓN

Cantidad de lubricante contenido en los reductores [l]

Nota. Las cantidades de lubricante indicadas son aconsejables y se recomienda controlarlas durante el llenado verificando el nivel mediante los respectivos tapones de servicio.

CPC	B56	B60	B58	B62	B57	B61	B59	B63	V53	V52	V54	V55
PLB 1002	2.80	2.00	2.20	2.00	2.80	1.30	1.50	1.30	2.50	2.50	2.50	2.50
PLB 1003	3.10	2.20	2.40	2.20	3.10	1.50	1.70	1.50	2.80	2.80	2.80	2.80
PLB 1004	3.60	2.50	2.70	2.50	3.60	1.70	1.90	1.70	3.30	3.30	3.30	3.30
PLB 1602	2.80	2.00	2.20	2.00	2.80	1.40	1.60	1.40	2.50	2.50	2.50	2.50
PLB 1603	3.20	2.20	2.40	2.20	3.20	1.60	1.80	1.60	2.90	2.90	2.90	2.90
PLB 1604	3.70	2.50	2.70	2.50	3.70	1.80	2.00	1.80	3.40	3.40	3.40	3.40
PLB 2502	5.80	4.60	4.80	4.60	5.80	2.30	2.50	2.30	5.50	5.50	5.50	5.50
PLB 2503	6.50	4.70	4.90	4.70	6.50	2.60	2.80	2.60	6.20	6.20	6.20	6.20
PLB 2504	6.80	4.80	5.00	4.80	6.80	2.80	3.00	2.80	6.50	6.50	6.50	6.50
PLB 5002	7.60	5.10	5.50	5.10	7.60	3.10	3.50	3.10	6.10	6.10	6.10	6.10
PLB 5003	6.10	4.50	4.70	4.50	6.10	2.40	2.60	2.40	5.80	5.80	5.80	5.80
PLB 5004	6.50	4.70	4.90	4.70	6.50	2.70	2.90	2.70	6.20	6.20	6.20	6.20
PLB 7002	12.70	9.00	9.40	9.00	12.70	5.60	4.50	5.60	11.20	11.20	11.20	11.20
PLB 7003	11.30	8.30	8.50	8.30	11.30	3.70	3.90	3.70	11.00	11.00	11.00	11.00
PLB 7004	12.00	8.70	8.90	8.70	12.00	4.10	4.30	4.10	11.70	11.70	11.70	11.70
PLB 10002	15.10	10.80	11.20	10.80	15.10	5.00	5.40	5.00	13.60	13.60	13.60	13.60
PLB 10003	16.20	11.40	11.80	11.40	16.20	5.60	6.00	5.60	14.70	14.70	14.70	14.70
PLB 10004	14.80	10.70	10.90	10.70	14.80	4.90	5.10	4.90	14.50	14.50	14.50	14.50
PLB 16002	15.30	10.90	11.30	10.90	15.30	5.10	5.50	5.10	13.80	13.80	13.80	13.80
PLB 16003	16.50	11.50	11.90	11.50	16.50	5.80	6.20	5.80	15.00	15.00	15.00	15.00
PLB 16004	15.00	10.90	11.10	10.90	15.00	5.10	5.30	5.10	14.70	14.70	14.70	14.70
PLB 18002	22.70	15.30	15.70	15.30	22.70	9.30	9.70	9.30	20.40	20.40	20.40	20.40
PLB 18003	16.90	11.90	12.30	11.90	16.90	5.90	6.30	5.90	15.40	15.40	15.40	15.40
PLB 18004	18.70	12.80	13.20	12.80	18.70	6.80	7.20	6.80	17.20	17.20	17.20	17.20
PLB 25002	18.50	10.00	10.20	10.00	18.50	10.00	10.20	10.00	15.60	15.60	15.60	15.60
PLB 25003	15.50	8.30	8.70	8.30	15.50	8.30	8.70	8.30	14.00	14.00	14.00	14.00
PLB 25004	15.50	8.80	9.20	8.80	15.50	8.80	9.20	8.80	14.00	14.00	14.00	14.00
PLB 30003	23.70	12.60	12.80	12.60	23.70	12.60	12.80	12.60	21.40	21.40	21.40	21.40
PLB 30004	17.70	9.50	9.90	9.50	17.70	9.50	9.90	9.50	16.20	16.20	16.20	16.20
PLB 35002	17.70	9.70	9.90	9.70	17.70	9.70	9.90	9.70	14.80	14.80	14.80	14.80
PLB 35003	23.40	12.70	13.10	12.70	23.40	12.70	13.10	12.70	21.10	21.10	21.10	21.10
PLB 35004	17.30	9.40	9.80	9.40	17.30	9.40	9.80	9.40	15.80	15.80	15.80	15.80
PLB 50002	28.30	15.40	15.60	15.40	28.30	15.40	15.60	15.40	25.90	25.90	25.90	25.90
PLB 50003	22.10	11.90	12.30	11.90	22.10	11.90	12.30	11.90	20.60	20.60	20.60	20.60
PLB 50004	22.00	13.30	13.70	13.30	22.00	13.30	13.70	13.30	20.50	20.50	20.50	20.50
PLB 65003	30.20	16.10	16.30	16.10	30.20	16.10	16.30	16.10	27.30	27.30	27.30	27.30
PLB 65004	27.20	14.80	15.20	14.80	27.20	14.80	15.20	14.80	25.70	25.70	25.70	25.70
PLB 90003	44.5	22.3	22.5	22.3	41.6	41.6	41.6	41.6	44.5	44.5	44.5	44.5
PLB 90004	40.3	21.8	22.2	21.8	38.8	38.8	38.8	38.8	40.3	40.3	40.3	40.3

- Sayfa 51 bakınız / See page 51 / Siehe seite 51 / Vedere a pagina 51 / Voir page 51 / Consulte la página 51

TR YAĞLAMA

Redüktörlerdeki yağlayıcı miktarı [l]

NOT: Tablodaki değerler yaklaşık yağ miktarlarıdır. Bundan dolayı yağ doldurulurken seviye tapasından yağ miktarı kontrol edilmelidir.

EN LUBRICATION

Lubricant quantity inside the drives [l]

NOTE: The lubricant quantities shown in the table are indicative, but should be verified during the filling operation, checking the level through the service plug.

DE SCHMIERUNG

Fuellmenge Getriebeschmierung [l]

P.S. Die angegebenen Schmiermittelmengen sind indikativ und sind waehrend der Befuellung anhand der Oelstandsstopfen zu ueberpruefen.

IT LUBRIFICAZIONE

Quantita'di lubrificante contenuto nei riduttori [l]

NB. Le quantità di lubrificante riportate sono indicative e vanno controllate in fase di riempimento verificando il livello tramite l'apposito tappo di servizio.

FR LUBRIFICATION

Quantité de lubrifiant présente dans les réducteurs [l]

N.B. Les quantités sont indicatives et doivent être contrôlées en phase de remplissage en vérifiant le niveau par le biais du bouchon de service.

ES LUBRICACIÓN

Cantidad de lubricante contenido en los reductores [l]

Nota. Las cantidades de lubricante indicadas son aconsejables y se recomienda controlarlas durante el llenado verificando el nivel mediante los respectivos tapones de servicio.

CPC	V49	V48	V50	V51	V42	V40	V41	V43	V46	V44	V45	V47
PLB 1002	2.50	2.50	2.50	2.50	2.80	2.80	2.80	2.80	2.80	2.80	2.80	2.80
PLB 1003	2.80	2.80	2.80	2.80	3.10	3.10	3.10	3.10	3.10	3.10	3.10	3.10
PLB 1004	3.30	3.30	3.30	3.30	3.60	3.60	3.60	3.60	3.60	3.60	3.60	3.60
PLB 1602	2.50	2.50	2.50	2.50	2.80	2.80	2.80	2.80	2.80	2.80	2.80	2.80
PLB 1603	2.90	2.90	2.90	2.90	3.20	3.20	3.20	3.20	3.20	3.20	3.20	3.20
PLB 1604	3.40	3.40	3.40	3.40	3.70	3.70	3.70	3.70	3.70	3.70	3.70	3.70
PLB 2502	5.50	5.50	5.50	5.50	5.80	5.80	5.80	5.80	5.80	5.80	5.80	5.80
PLB 2503	6.20	6.20	6.20	6.20	6.50	6.50	6.50	6.50	6.50	6.50	6.50	6.50
PLB 2504	6.50	6.50	6.50	6.50	6.80	6.80	6.80	6.80	6.80	6.80	6.80	6.80
PLB 5002	6.10	6.10	6.10	6.10	7.60	7.60	7.60	7.60	7.60	7.60	7.60	7.60
PLB 5003	5.80	5.80	5.80	5.80	6.10	6.10	6.10	6.10	6.10	6.10	6.10	6.10
PLB 5004	6.20	6.20	6.20	6.20	6.50	6.50	6.50	6.50	6.50	6.50	6.50	6.50
PLB 7002	11.20	11.20	11.20	11.20	12.70	12.70	12.70	12.70	12.70	12.70	12.70	12.70
PLB 7003	11.00	11.00	11.00	11.00	11.30	11.30	11.30	11.30	11.30	11.30	11.30	11.30
PLB 7004	11.70	11.70	11.70	11.70	12.00	12.00	12.00	12.00	12.00	12.00	12.00	12.00
PLB 10002	13.60	13.60	13.60	13.60	15.10	15.10	15.10	15.10	15.10	15.10	15.10	15.10
PLB 10003	14.70	14.70	14.70	14.70	16.20	16.20	16.20	16.20	16.20	16.20	16.20	16.20
PLB 10004	14.50	14.50	14.50	14.50	14.80	14.80	14.80	14.80	14.80	14.80	14.80	14.80
PLB 16002	13.80	13.80	13.80	13.80	15.30	15.30	15.30	15.30	15.30	15.30	15.30	15.30
PLB 16003	15.00	15.00	15.00	15.00	16.50	16.50	16.50	16.50	16.50	16.50	16.50	16.50
PLB 16004	14.70	14.70	14.70	14.70	15.00	15.00	15.00	15.00	15.00	15.00	15.00	15.00
PLB 18002	20.40	20.40	20.40	20.40	22.70	22.70	22.70	22.70	22.70	22.70	22.70	22.70
PLB 18003	15.40	15.40	15.40	15.40	16.90	16.90	16.90	16.90	16.90	16.90	16.90	16.90
PLB 18004	17.20	17.20	17.20	17.20	18.70	18.70	18.70	18.70	18.70	18.70	18.70	18.70
PLB 25002	15.60	15.60	15.60	15.60	18.50	18.50	18.50	18.50	18.50	18.50	18.50	18.50
PLB 25003	14.00	14.00	14.00	14.00	15.50	15.50	15.50	15.50	15.50	15.50	15.50	15.50
PLB 25004	14.00	14.00	14.00	14.00	15.50	15.50	15.50	15.50	15.50	15.50	15.50	15.50
PLB 30003	21.40	21.40	21.40	21.40	23.70	23.70	23.70	23.70	23.70	23.70	23.70	23.70
PLB 30004	16.20	16.20	16.20	16.20	17.70	17.70	17.70	17.70	17.70	17.70	17.70	17.70
PLB 35002	14.80	14.80	14.80	14.80	17.70	17.70	17.70	17.70	17.70	17.70	17.70	17.70
PLB 35003	21.10	21.10	21.10	21.10	23.40	23.40	23.40	23.40	23.40	23.40	23.40	23.40
PLB 35004	15.80	15.80	15.80	15.80	17.30	17.30	17.30	17.30	17.30	17.30	17.30	17.30
PLB 50002	25.90	25.90	25.90	25.90	28.30	28.30	28.30	28.30	28.30	28.30	28.30	28.30
PLB 50003	20.60	20.60	20.60	20.60	22.10	22.10	22.10	22.10	22.10	22.10	22.10	22.10
PLB 50004	20.50	20.50	20.50	20.50	22.00	22.00	22.00	22.00	22.00	22.00	22.00	22.00
PLB 65003	27.30	27.30	27.30	27.30	30.20	30.20	30.20	30.20	30.20	30.20	30.20	30.20
PLB 65004	25.70	25.70	25.70	25.70	27.20	27.20	27.20	27.20	27.20	27.20	27.20	27.20
PLB 90003	44.5	44.5	44.5	44.5	-	-	-	-	-	-	-	-
PLB 90004	40.3	40.3	40.3	40.3	-	-	-	-	-	-	-	-

- Sayfa 51 bakınız / See page 51 / Siehe seite 51 / Vedere a pagina 51 / Voir page 51 / Consulte la página 51

Fren Brake Bremse	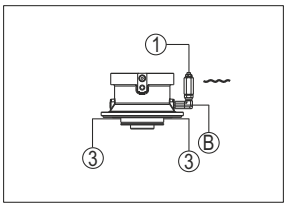	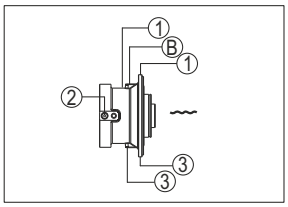	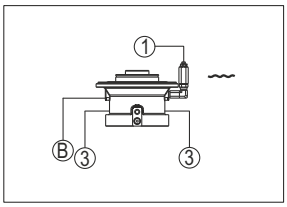
Giriş EL Input EL Eingang EL	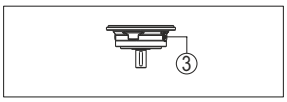	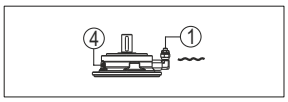	
Giriş EML Input EML Eingang EML	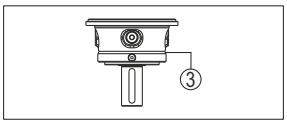	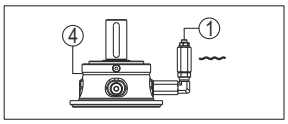	
Giriş EM-EP-ET Input EM-EP-ET Eingang EM-EP-ET	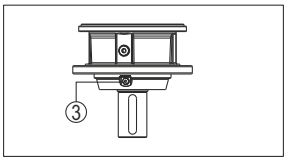	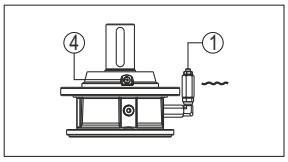	

① Doldurma ve havalandırma
Filling up and venting
Füllen und Entlüften

② Seviye Tapası
Level plug
Ölstandstopfen

③ Boşaltma Tapası
Drain plug
Ablassstofen

④ Doldurma ve havalandırma
Fillling and vent plug
Einfüllstopfen - Entlüfttungstopfen

Ⓑ Fren kontrol tapası
Brake opening control
Steuerung Bremsenöffnung

〰 Minimum seviye
Minimum level
Mindestölstand

TR YAĞ DOLDURMA

B5. B55, B53 ve B54 montaj pozisyonları için yağı, redüktörü yarı noktasına kadar doldurunuz. Doğru seviyedeki yağlama, seviye tapaları ile kontrol edilebilir. Bir önceki şekilde 2 rakamı ile gösterilmiştir.

V3, V1, B51, V37, V36, V35, V38, V15, V16, V17 ve V18 montaj pozisyonlarında için redüktörün üst kısımlarında yerleşmiş olan parçaların doğru yağlanabilmesi için, ağzına kadar yağ koyulması gerekmektedir. Bu durumda dolum yaparken redüktörün üst kısmındaki tapalardan en az 1 tanesi kaldırılmalıdır. Bir önceki şekilde 4 rakamı ile gösterilmiştir. Bu yolla hava kabarcıklarının oluşması önlenmektedir.

EN FILLING UP

For the assembly positions B5, B55, B53 and B54 fill up to the halfway point of the reduction gear; the right level of the lubricant can be checked with the level plugs, indicated with (2) in the previous figure.

For the assembly positions V3, V1, B51, V37, V36, V35, V38, V15, V16, V17 and V18 they have to be filled right up to the top to allow correct lubrication of the components situated at the upper most part of the reduction gear. In this case, when filling up, you have to remove at least one of the plugs from the upper most part of the reduction gear, indicated with (4) in the previous figure, so as to prevent air bubbles forming.

DE EİNFÜLLEN VOM ÖL

Bei den Montagepositionen B5, B55, B53 und B54 erfolgt das Einfüllen bis zur Mittellinie vom Planetengetriebe. Der korrekte Ölstand kann über die dafür vorgesehenen Ölstandsdeckel kontrolliert werden (siehe Abbildung oben (2)).

Bei den Montagepositionen V3, V1, B51, V37, V36, V35, V38, V15, V16, V17 ve V18 ist eine komplette Füllung erforderlich, um die korrekte Schmierung der Teile an der höchsten Stelle im Planetengetriebe zur garantieren. In diesem Fall muss beim Einfüllen mindestens einer der Deckel oben (Abbildung oben (4)) abgenommen werden, damit sich keine Luftblasen bil-den.

Freno Frein Freno	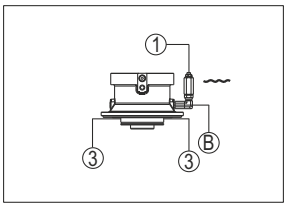	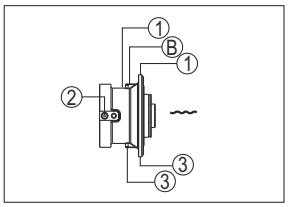	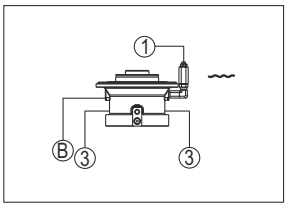
Entrata EL Entrée EL Entrada EL	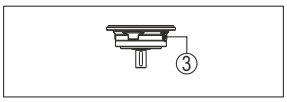	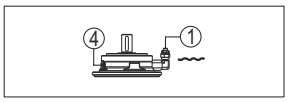	
Entrata EML Entrée EML Entrada EML	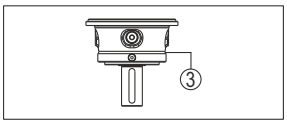	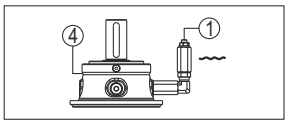	
Entrata EM-EP-ET Entrée EM-EP-ET Entrada EM-EP-ET	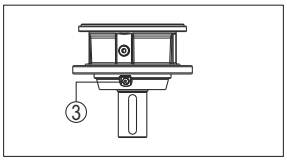	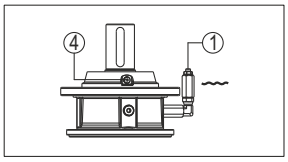	

① Carico e sfiato
Nourissage et évent
Carga y purga

② Tappo Livello
Bouchon jauge
Tapón de nivel

③ Bouchon vidange
Tapón de descarga
Tappo scarico

④ Toppo - Carico - Toppo sfiato
Bouchon remplissope - Bouchon à èvent
Tapón de carga - Tapón de venteo

Ⓑ Comando apertura freno
Commande d'ouverture du frein
Mando apertura freno

〰 Livello minimo
Niveau minimum
Nivel mínimo

IT RİEMPİMENTO

Per le posizioni di montaggio B5, B55, B53 e B54 il riempimento va effettuato fino alla mezzeria del riduttore; il corretto livello del lubrificante può essere verificato mediante gli appositi tappi di livello, indicati con (2) nella figura precedente.

Per le posizioni di montaggio V3, V1, B51, V37, V36, V35, V38, V15, V16, V17 e V18 è necessario effettuare il completo riempimento, in modo da consentire la corretta lubrificazione deicomponenti posti nella parte più alta del riduttore. In questo caso durante il riempimento occorre rimuovere almeno uno dei tappi posti nella parte più alta del riduttore, indicati con (4) nella figura precedente, in modo da evitare la formazione di bolle d'aria.

FR NOURRİSSAGE

Pour les positions de montage B5, B55, B53 et B54 le nourrissage doit être fait jusqu'à la ligne médiane du réducteur; le niveau correct de lubrifiant peut être vérifié à l'aide de jauges, indiquées par un (2) sur la figure précédente.

Pour les positions de montage V3, V1, B51, V37, V36, V35, V38, V15, V16, V17 et V18 il est nécessaire d'effectuer un nourrissage complet, pour permettre la bonne lubrification des composants se trouvant dans la partie la plus haute du réducteur. Dans ce cas, pendant le nourrissage, enlever au moins l'un des bouchons se trouvant dans la partie la plus haute du réducteur, indiqués par un (4) sur la figure précédente, de manière à éviter la formation de bulles d'air.

ES LLENADO

Para las posiciones de montaje B5, B55, B53 y B54 el llenado se debe efectuar hasta la línea mediana del reductor; el nivel correcto del lubricante se puede comprobar a través de los correspondientes tapones de nivel, indicados con (2) en la figura precedente.

Para las posiciones de montaje V3, V1, B51, V37, V36, V35, V38, V15, V16, V17 y V18 es necesario efectuar un llenado completo, para consentir la lubricación correcta de los componentes situados en la parte más alta del reductor. En este caso, durante el llenado es preciso quitar por lo menos uno de los tapones situados en la parte más alta del reductor, indicados con (4) en la figura precedente, a fin de evitar que se formen burbujas de aire.

TR GENLEŞME TANKI

Artan sıcaklık ile birlikte yağın hacmi artar. Redüktör bütünüyle yağla dolu iken çalıştığı durumlarda yağın genleşmesi ve böylece redüktörün kendi içinde yüksek basınç oluşturma riskini azaltması için bir tanka sahip olunması gerekmektedir.

Dolumu kolaylaştırmak ve aynı zamanda yağın genleşmesine izin vermek için genleşme tankları farklı kapasitelerde ve tam donanımlı olarak isteğe bağlı verilebilir. Bu genleşme tankları, redüktöre sabit bağlama yolu veya esnek borular yardımıyla bağlanabilir.

Genleşme tankı her zaman yağ seviyesine uygun olarak yerleştirilmelidir. Bu da örneğin tank ile paralel yerleştirilmiş şeffaf bir tüp ile görülebilir (bazı durumlarda standart). Yağlamak istediğiniz en yüksek noktanın üzerinde olmalıdır. Bu yüzden havalandırma tapalarının üzerindedir.

EN EXPANSION TANK

As the lubricant increases in volume with the rising temperature, when the reduction gear is working in the completely filled conditions it is necessary to have a tank that allows the oil to expand and thus reduce the risk of high pressures being created inside the reduction gear itself.

To facilitate filling up and, at the same time, allow the oil to expand, expansion tanks are available on request with different capacities and supplied in complete kits. These expansion tanks can be connected to the reduction gear with a rigid connection or flexible pipes.

The expansion tank must always be placed so the level of oil, which can be seen by means of a small transparent tube placed in parallel with the tank for instance (standard in some kits), is above the highest point you wish to lubricate and, hence, above the venting plugs.

DE AUSGLEICHSBEHÖLTER

Da das Schmiermittel mit steigender Temperatur an Volumen gewinnt, muss ein Behälter bereitgestellt werden, der die Ölausdehnung erlaubt und das Risiko hoher Drücke im Planetengetriebe vermeidet, wenn mit voller Füllung gearbeitet wird.

Um das Einfüllen zu erleichtern und die Ölausdehnung zu ermöglichen, sind auf Wunsch entsprechende Ausdehnungsgefäße mit unterschiedlichem Fassungsvermögen lieferbar, die auch als kompletter Kit erhältlich sind. Diese Ausdehnungsgefäße können über steife Leitungen oder Schläuche an das Planetengetriebe angeschlossen werden.

Das Ausdehnungsgefäß muss so positioniert sein, dass sich der Ölstand, der zum Beispiel über eine durchsichtige Ölstandsanzeige parallel zum Gefäß (serienmäßig bei einigen Kits) angezeigt wird, oberhalb der höchsten Stelle befindet, die geschmiert werden soll, und damit oberhalb der Entlüftungsdeckel.

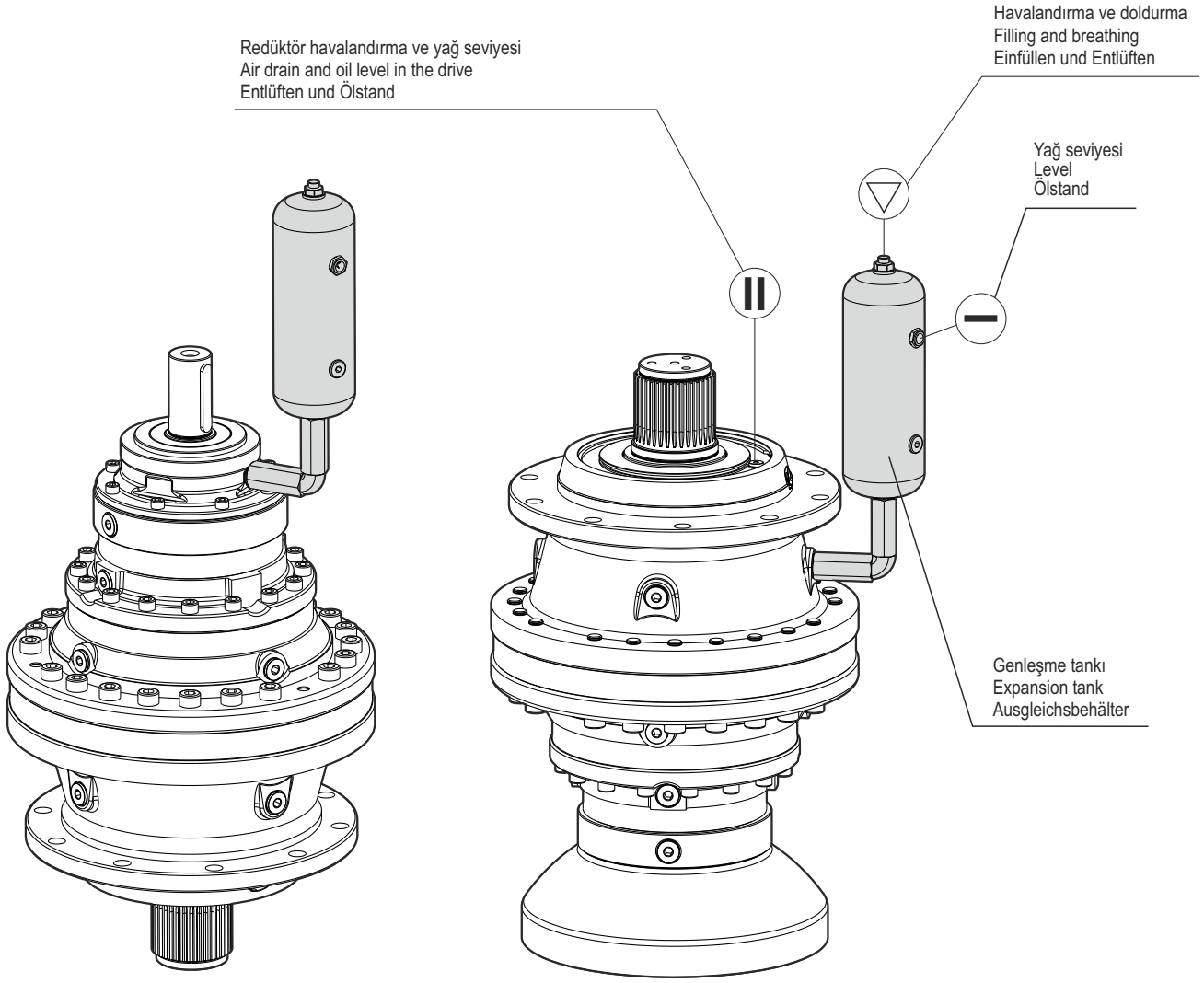

IT VASO DI ESPANSIONE

Poiché il lubrificante aumenta il suo volume al crescere della temperatura, quando il riduttore lavora in condizioni di pieno riempimento è necessario predisporre un serbatoio che permetta l'espansione dell'olio e riduca il rischio di pressioni elevate all'interno del riduttore stesso.

Per agevolare l'operazione di riempimento e allo stesso tempo consentire l'espansione dell'olio sono disponibili, a richiesta, degli appositi vasi di espansione, di diverse capacità e fornibili anche sotto forma di kit completo. Tali vasi di espansione possono essere collegati al riduttore mediante connessione rigida o mediante tubi flessibili.

Il vaso di espansione deve essere sempre collocato in modo che il livello dell'olio, visualizzabile ad esempio mediante un tubicino trasparente posto in parallelo con il vaso (di serie per alcuni kit), si trovi al di sopra della zona più alta che si vuole lubrificare e quindi dei tappi di sfiato.

FR VASE D'EXPANSION

Le lubrifiant augmentant son volume si la température monte, quand le réducteur fonctionne dans des conditions de nourrissage complet, il faut prévoir un réservoir permettant l'expansion de l'huile et la réduction du risque de pressions élevées dans le réducteur.

Pour faciliter l'opération de nourrissage et permettre l'expansion de l'huile, il existe, en option, des vases d'expansion, de différentes capacités et livrables aussi sous forme de kit complet. Ces vases d'expan sion peuvent être raccordés au réducteur par des raccords rigides ou des tubes flexibles.

Le vase d'expansion doit toujours être positionné de manière que le niveau de l'huile, qu'on peut contrôler par exemple grâce à un petit tube transparent se trouvant parallèlement au vase (certains kits en sont déjà équipés dès leur sortie d'usine), soit dans la zone la plus haute qu'on veut lubrifier et par conséquent au-dessus des évents.

ES RECIPIENTE DE EXPANSIÓN

Puesto que el lubricante aumenta su volumen al aumentar la temperatura, cuando el reductor trabaja en condiciones de completo llenado es necesario predisponer un depósito que permita la expansión del aceite y reduzca el riesgo de altas presiones dentro del propio reductor.

Para facilitar la operación de llenado y al mismo tiempo consentir la expansión del aceite, hay disponibles, bajo pedido, unos idóneos vasos de expansión, con diferentes capacidades y suministrables también en forma de kit completo. Dichos vasos de expansión se pueden conectar con el reductor mediante conexión rígida o mediante mangueras flexibles.

El vaso de expansión debe estar situado siempre de manera que el nivel del aceite, visualizable por ejemplo a través de un tubito transparente puesto en paralelo con el vaso (de serie con algunos kit), esté por encima de la zona más alta que se desea lubricar y por lo tanto de los tapones purgadores.

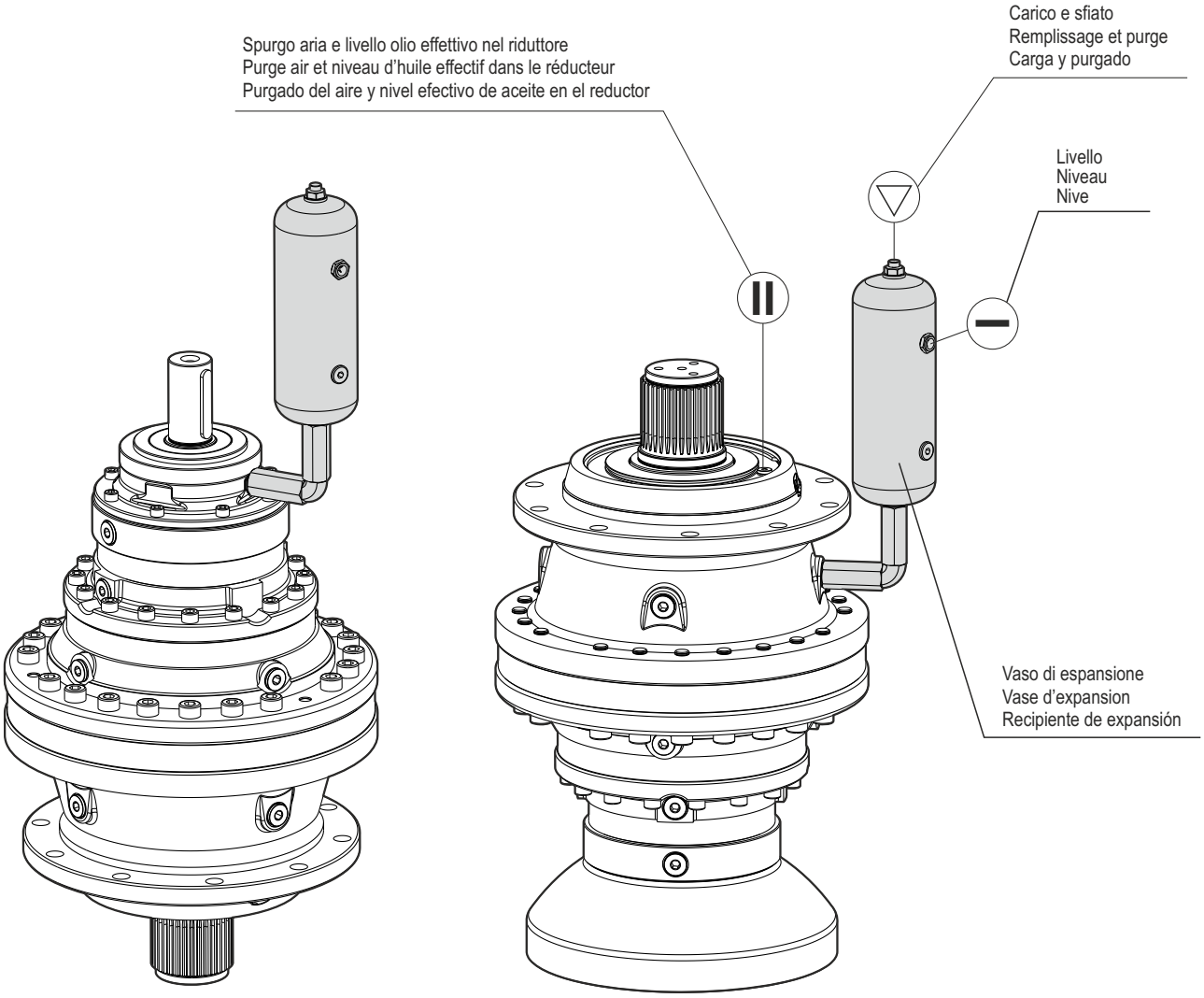

Genleşme tanklarının teknik özellikleri ve satış kodları için aşağıdaki tabloya ve ilgili şekle bakın.

Please refer to the following table and relative figure for the sales codes and technical specifications of the tank kits.

Die Bestellnummern und technischen Daten der Kits für Ausdehnungsgefäße können der Tabelle unten und der dazugehörigen Abbildung entnommen werden.

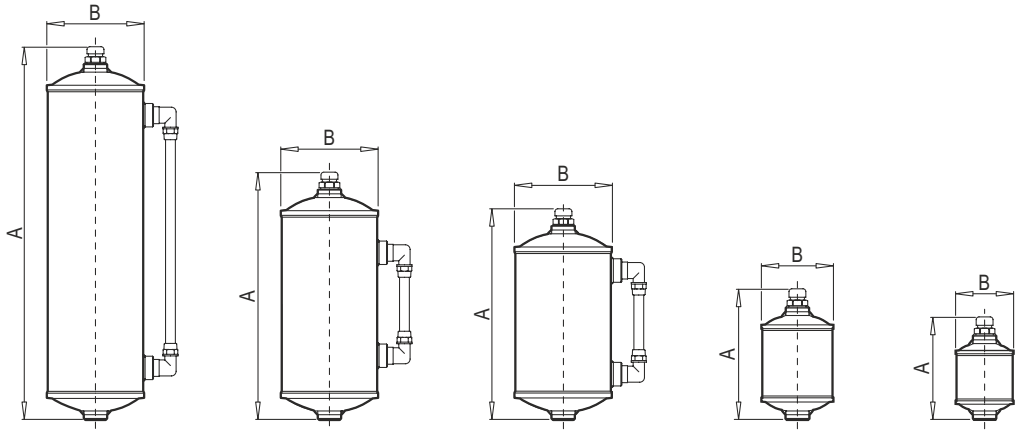

Tip / Type / Typ	A	B	Kapasite Capacity Fassung-vermögen [l]
GT 015	110	65	~ 0.15
GT 030	140	80	~ 0.30
GT 090	225	105	~ 0.90
GT 150	265	105	~ 1.50
GT 200	400	105	~ 2.00

Genleşme tankı seçimi genleşen yağın hacmine bağlı olmalıdır ve bu da şu yolla bulunabilir. Aşağıdaki grafikte redüktörün yağ sıcaklığı ve ortam sıcaklığı arasındaki farklılığı olan noktayı bulun ki bu Δt ve redüktörü doldurmaya gerekli yağın hacmi de V dir. Bu iki noktanın kesiştiği yerde genleşmiş yağın hacmini bulabilirsiniz ve tank hesaplanan hacmin 2 katı kadar boyutlandırılmıştır.

The choice of tank should be based on the volume of expanded oil V_e; this can be found in the following way: in the following graph, find the point which has Δt difference between the reduction gear's oil temperature and ambient temperature as the abscissa and volume V of oil necessary to fill the reduction gear as the ordinate. On the basis of the area in which the point falls, you find the volume of expanded oil V_e and the tank is sized for double the volume calculated.

Für die Auswahl vom Behälter ist das Volumen vom ausgedehnten Öl Ve entscheidend, das wie folgt ermittelt werden kann: Auf der Grafik den Punkt ermitteln, dessen X-Koordinate die Differenz Δt zwischen der Öltemperatur im Getriebe und der Umgebungstemperatur ist und dessen Y-Koordinate das Volumen V vom Öl, das zum Füllen vom Getriebe erforderlich ist. Anhand des Bereichs auf der Grafik, in den der Punkt fällt, kann das Volumen Ve vom ausgedehnten Öl ermittelt werden. Der Behälter wird dann auf das doppelte Volumen des errechneten Werts ausgelegt.

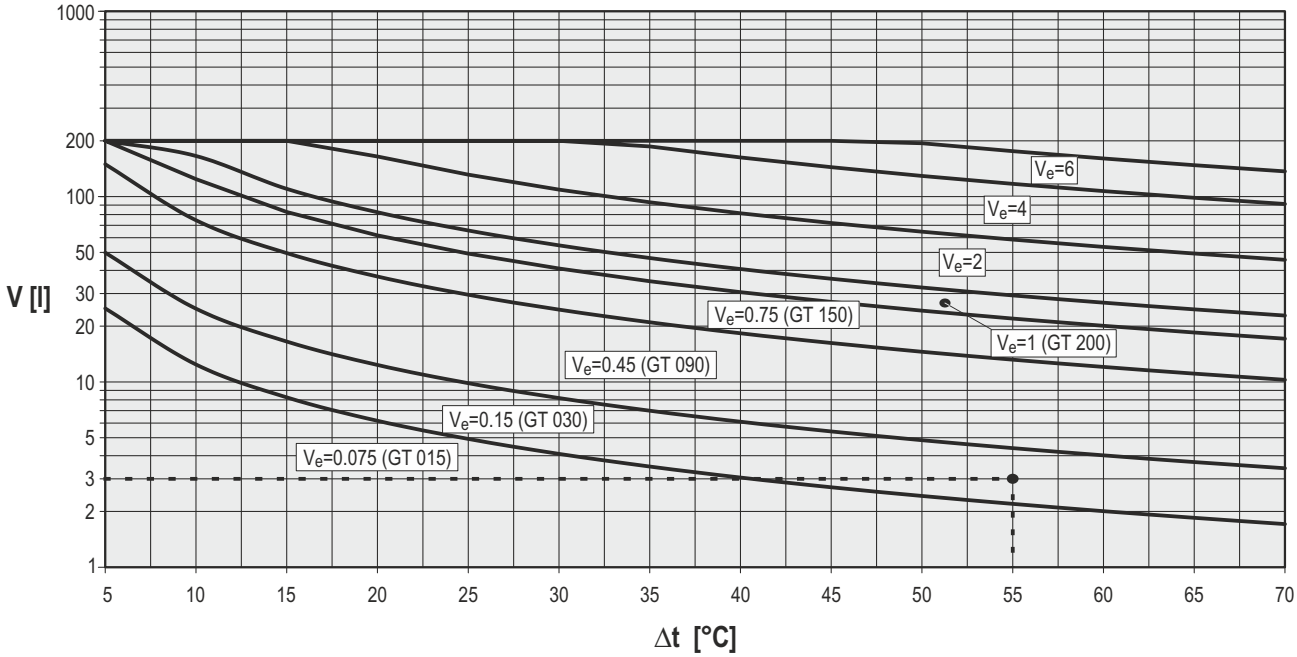

Fare riferimento alla seguente tabella e alla relativa figura per conoscere i codici di vendita e i dati tecnici dei kit serbatoio.

Voir le tableau suivant et la figure correspondante pour connaître les codes de vente et les caractéristiques techniques des kits réservoir.

Hágase referencia a la siguiente tabla ya la correspondiente figura para conocer los códigos de venta y los datos técnicos de los kits depósito.

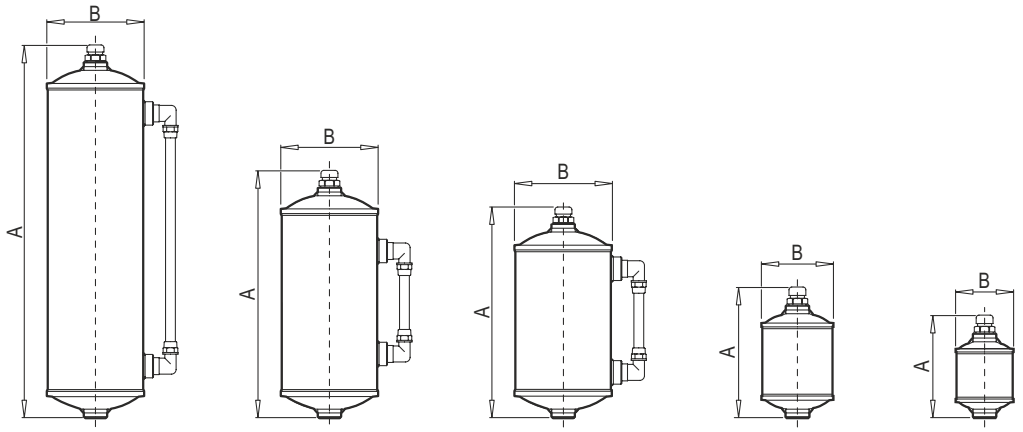

Tipo / Type / Tipo	A	B	Capacità Contenance Capacidad [l]
GT 015	110	65	~ 0.15
GT 030	140	80	~ 0.30
GT 090	225	105	~ 0.90
GT 150	265	105	~ 1.50
GT 200	400	105	~ 2.00

La scelta del serbatoio va fatta in base al volume di olio espanso Ve; questo si può determinare nel seguente modo: individuare sul grafico che segue il punto cheha per ascissa la differenza Δt tra la temperatura dell'olio del riduttore e la temperatura ambiente e per ordinata il volume V di olio necessario al riempimento del riduttore. In base alla zona del grafico in cui cade il punto si determina il volume di olio espanso Ve e si dimensiona il serbatoio per un volume doppio rispetto a quello calcolato.

Le choix du réservoir se fait en fonction du volume d'huile expansé Ve ; ce volume peut être déterminé de la manière suivante : trouver sur le graphique ci-dessous le point qui a pour abscisse la différence Dt entre la température de l'huile du réducteur et la température ambiante et pour ordonnée le volume V d'huile nécessaire au nourrissage du réducteur. En fonction de la zone du graphique où tombe le point, on détermine le volume d'huile expansé Ve et on choisit les dimensions du réservoir sur la base d'un volume double par rapport au volume calculé.

El depósito se debe seleccionar sobre la base del volumen de aceite expandido Ve; lo que se puede determinar de la siguiente manera: Individuar, en el gráfico siguiente, el punto que tiene por abscisa la diferencia Dt entre la temperatura del aceite del reductor y la temperatura ambiente y por ordenada el volumen V de aceite necesario para llenar el reductor. En base a la zona del gráfico en la cual cae el punto, se determina el volumen de aceite expandido Ve y se dimensiona el depósito para un volumen doble con respecto al calculado.

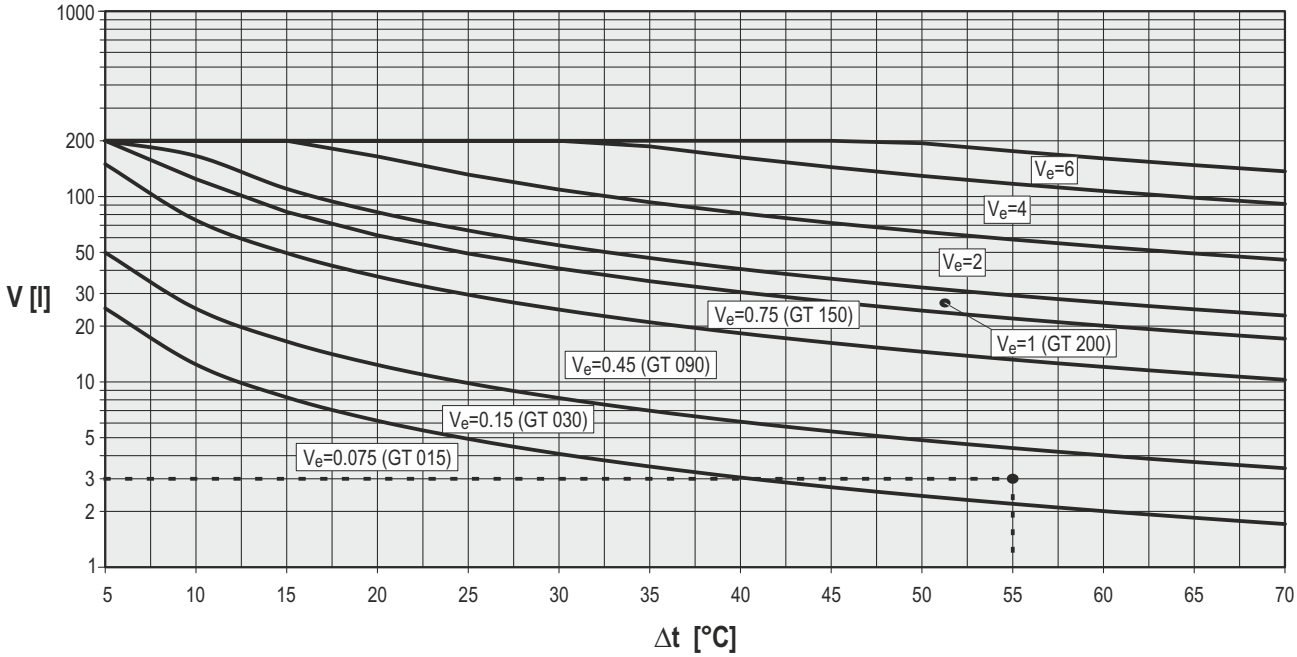

TR YARDIMCI SOĞUTMA SİSTEMLERİ

Termal güçten daha yüksek bir güç iletildiği zaman redüktörün bundan kurtulması mümkündür. Burada aşırı güçteki termal kuvveti atmak için yardımcı soğutma sistemi kullanılmalıdır. Bu da yağın filtrelenerek hem dişlilerin hem de rulmanların ömrünü uzatır.

İsteğe bağlı olarak 3 çeşit yardımcı soğutma sistemleri mevcuttur. Bunların özellikleri ve boyutları aşağıdaki tabloda verilmiştir.

EN AUXILIARY COOLING SYSTEMS

When the power to be transmitted is higher than the thermal power the reduction gear is able to get rid of, you will have to use an auxiliary cooling system which, besides getting rid of the thermal power in excess P_S, also allows the lubricant to be filtered which prolongs the life of both gears and bearings.

On request three types of auxiliary cooling systems are available. Their specifications and dimensions are given in the following table.

DE ZUSÄTZLICHE KÜHLSYSTEME

Wenn die Leistung, die übertragen wird, die Wärmeleistung übersteigt, die das Planetengetriebe ableiten kann, muss ein zusätzliches Kühlsystem installiert werden, das nicht nur eine Ableitung der überschüssigen Wärmeleistung PS erlaubt, sondern auch ein Filtern vom Schmieröl möglich macht und damit die Lebensdauer der Zahnräder und Lager erhöht.

Auf Wunsch sind drei verschiedene Kühlsysteme erhältlich (siehe Tabelle unten).

		YS 04	YS 10	YS 20
Yağ debisi Oil flow rate Öldurchsatz	[l/min]	10	10	23
* Isıl güç kapasitesi * Thermal power dissipated * abgeleitete Wärmeleistung (per/*where* /für Dt=t_R-Ta=40°C)	[kW]	4	10	20
Hava debisi Air flow rate Luftdurchsatz	[m^3/h]	700	4080	4500
Güç tüketimi Power consumption Leistungsaufnahme	[kW]	0.5	0.75	1.1
Maksimum basınç Maximum pressure Höchstdruck	[bar]	6	6	6
Voltaj Power voltage Versorgungsspannung	[V]	230/400	230/400	230/400
Güç frekansı Power frequency Versorgungsfrequenz	[Hz]	50/60	50/60	50/60
Koruma sınırı Protection level Schutzart	IP	55	55	55

*Güç, yağ vizkositesi ile birlikte dönüştürücü tarafından yayılmıştır. Deniz seviyesinin üzerinde 0 metrede ISO VG 150.

* Power dissipated by the exchanger with oil viscosity: ISO VG 150 at 0 metres above sea level.

* Vom Wärmeaustauscher abgeleitete Leistung mit Öl mit einer Viskosität von ISO VG 150 bei 0 m ü. NN.

	A	B	C	D	E	F	ØH	L	M
YS 04	465	540	420	350	280	20	9	180	275
YS 10	680	550	620	555	300	20	9	280	470
YS 20	830	660	755	695	380	20	9	305	570

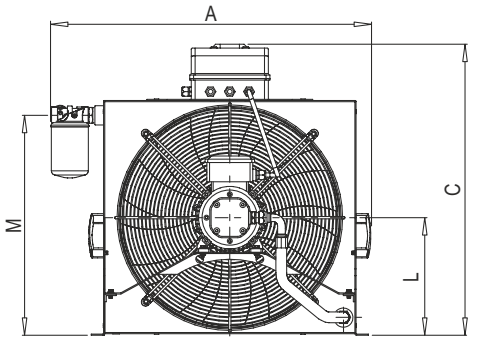

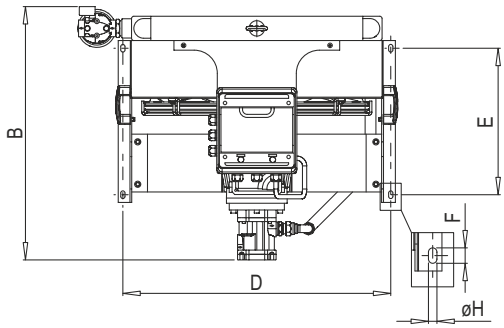

IT SİSTEMİ AUSİLİARİ Dİ RAFFREDDAMENTO

Quando la potenza da trasmettere è su periore alla potenza termica che il riduttore è in grado di smaltire, è necessario impiegare un sistema ausiliario di raffreddamento che, oltre a permettere lo smaltimento della potenza termica in eccesso PS, consente di effettuare la filtrazione del lubrificante, prolungando la vita di ingranaggi e cuscinetti.

Sono disponibili, a richiesta, tre tipi di sistemi ausiliari di raffreddamento, le cui caratteristiche e dimensioni sono indicate di seguito.

FR SYSTÈMES AUXILIAIRES DE REFROIDISSEMENT

Quand la puissance à transmettre est supérieure à la puissance thermique que le réducteur est en mesure d'évacuer, il faut utiliser un système auxiliaire de refroidissement qui non seulement permet d'évacuer la puissance thermique en excès PS, mais permet aussi de filtrer la graisse, et par conséquent de prolonger la vie des engrenages et des roulements.

Il existe, en option, trois types de systèmes auxiliaires de refroidissement dont les caractéristiques et les dimensions sont indiquées ci-dessous.

ES SİSTEMAS AUXİLİARES DE REFRİGERACİÓN

Cuando la potencia a transmitir es mayor que la potencia térmica que el reductor es capaz de eliminar, es necesario utilizar un sistema auxiliar de refrigeración que, además de permitir la eliminación de la potencia térmica en exceso PS, permite efectuar el filtrado del lubricante, alargando la vidade engranajes y coji-netes.

Hay disponibles, bajo pedido, tres tipos de sistemas auxiliares de refrigeración, cuyas características y medidas se indican a continuación.

		YS 04	YS 10	YS 20
Portata olio Débit huile Caudal aceite	[l/min]	10	10	23
* Potenza termica dissipata * Puissance thermique dissipée * Potencia térmica disipada (per/para/para Dt=t_R-Ta=40°C)	[kW]	4	10	20
Portata aria Débit d'air Caudal aire	[m^3/h]	700	4080	4500
Potenza assorbita Puissance absorbée Potencia absorbida	[kW]	0.5	0.75	1.1
Pressione massima Pression maximum Presión máxima	[bar]	6	6	6
Tensione di alimentazione Tension d'alimentation Tensión de alimentación	[V]	230/400	230/400	230/400
Frequenza di alimentazione Fréquence d'alimentation Frecuencia de alimentación	[Hz]	50/60	50/60	50/60
Indice di protezione Indice de protection Índice de protección	IP	55	55	55

* Potenza dissipata dallo scambiatore con olio con viscosità: ISO VG 150 a 0 metri s.l.m.

* Puissance dissipée par l'échangeur avec une huile à viscosité: ISO VG 150 à 0 mètres au-dessus du niveau de la mer.

Potencia disipada por el intercambiador con aceite con viscosidad: ISO VG 150 a 0 metros s.n.m.

	A	B	C	D	E	F	ØH	L	M
YS 04	465	540	420	350	280	20	9	180	275
YS 10	680	550	620	555	300	20	9	280	470
YS 20	830	660	755	695	380	20	9	305	570

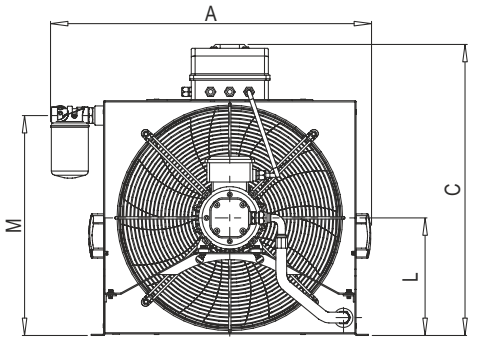

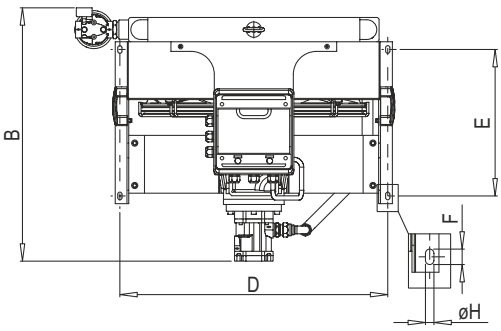

Yardımcı soğutma sisteminin temel parçaları şunlardır: yağ-hava ısı dönüştürücü, dişli pompası (sabit kaydırım tipi), elektrik motoru, dönen filtre (60 mm süzme derecesi ile), pompa ile eş eksenli fan, redüktör üzerine yerleştirilecek 2 termostat, 60 derece sıcaklığa ulaşıncaya dek soğutma biriminin çalışmasını önleyici bir set, maksimum sıcaklık aşıldığı zaman alarmı harekete geçirecek veya redüktörün çalışmasını durduracak ayrı bir set ve besleme basıncı görmeye yarayan ölçme aleti.

Ek olarak dikey eksenli montaj pozisyonları için ve tabii ki, her nerede redüktör yağ ile doluysa genleşme tankı montajlanmalıdır. Bu durumlarda GT 200 genleşme tankının kullanılmasını öneriyoruz.

İsteğe bağlı olarak opsiyonel parçalar tedarik edilebilir.

Örneğin;

- Yağ geçişinin görselliğine sahip debimetre
- Elektrik kontağı ile redüktörün içindeki fazla basıncı gösteren basınç şalteri
- Baypas vanası şeklinde sıcaklığı sürekli ayarlayan kontrol birimi
- Farklı süzme derecelerine sahip filtre (10, 25, 90,125 mm)
- Farklı sıcaklıkta çalıştıran termostat (ya 50 ya da 40 derece)

Elektrik kontaktlarının bağlanması,hidrolik devre ve bunlar için gerekli olan tüm materyaller müşteri sorumluğundadır.

En uygun sistem seçimi, dağıtılmaya ihtiyaç duyulan termal güç (PS) ve redüktör içindeki yağın sıcaklığı Δt ile ortam sıcaklığı (t_R) arasındaki farklılığa da bağlı olarak yapılmalıdır.
Grafik kullanımı size yardımcı olacaktır.

Fundamental components of the auxiliary cooling system are: an oil-air heat exchanger, a gear pump (constant displacement type), an electric motor, a spin-on filter (with a filtering degree of 60 mm), a fan coaxial with the pump and two thermostats to install on the reduction gear, one set for the minimum system start-up temperature, which prevents the cooling unit starting until a temperature of 60°C is reached, and the other set for a maximum temperature which, when exceeded, can trigger an alarm and/or stop the reduction gear working and a gauge to see delivery pressure.

In addition, for the assembly positions with a vertical axis and, of course, wherever the reduction gear is filled up completely with lubricant, an expansion tank has to be mounted. In these cases we recommend using the GT 200 expansion tank.

On request optional components can be supplied, such as:

- a flow meter so as to have a visual of the oil's passage;
- a pressure switch to indicate overpres sures inside the reduction gear by the switching of an electrical contact;
- control unit with continuous adjustment of the temperature by means of a bypass valve;
- filter with a different filtering degree (10, 25, 90 or 125 mm);
- Thermostat with different start-up temperature (either 50°C or 40°C)

Connection of the electrical contacts and hydraulic circuit and all the material needed for it are the responsibility of the customer.

The choice of the most suitable system must be made based on the thermal power P_S you need to dissipate and on the Δt difference between the temperature of the oil inside the reduction gear t_R and ambient temperature t_a, using this graph to help you.

Das zusätzliche Kühlsystem umfasst folgende Komponenten: ein Öl-Luft-Wärmeaustauscher, eine Zahnradpumpe (mit vorgegebene Hubraum), ein Elektromotor, ein Spin-on Filter (Filterstärke 60 mm), ein koaxiales Gebläse zur Pumpe und zwei Thermostate, die am Planetengetriebe installiert werden. Ein Thermostat wird auf die Mindesttemperatur zum Starten vom Kühlsystem geeicht und verhindert das Einschalten vom Kühlsystem bis zu einer Temperatur von 60°C, der andere Thermostat wird auf die Höchsttemperatur geeicht, bei deren Überschreiten ein Alarm ausgelöst u/o das Planetengetriebe abgeschaltet werden kann und eine Manometer zu Anzeige vom Druck am Eingang.

Bei Montage in Position mit vertikaler Achse und immer dann, wenn mit voller Ölfüllung gearbeitet wird, muss außerdem ein Ausdehnungsgefäß installiert werden. In diesen Fällen wird dazu geraten, das Ausdehnungsgefäß GT 200 zu installieren.

Auf Wunsch ist folgendes Zubehör erhältlich:

- Durchflussmesser mit Sichtglas für Ölfluss;
- Druckwächter zur Anzeige vom Überdruck im Planetengetriebe durch Umschalten eines elektrischen Kontakts;
- Steuergerät für stufenlose Temperatur regelung mittels Bypass-Ventil;
- Filter mit anderer Filterstärke (10, 25, 90 oder 125 mm);
- Thermostat mit unterschiedlicher Starttemperatur (50°C oder 40°C)

Für den Anschluss der elektrischen Kontakte und vom Ölkreislauf sowie die Bereitstellung des erforderlichen Materials ist der Kunde zuständig.

Das geeignete System wird anhand der Wärmeleistung P_S ausgewählt, die abgeleitet werden muss, und der Differenz Dt zwischen der Öltemperatur im Planetengetriebe t_R und der Umgebungstemperatur t_a, und zwar mit folgender Grafik:

Componenti fondamentali del sistema ausiliario di raffreddamento sono: uno scambiatore di calore olio-aria, una pompa ad ingranaggi (a cilindrata fissa), un motore elettrico, un filtro spin-on (grado di filtrazione 60 μm), un ventilatore coassiale alla pompa e due termostati da installare sul riduttore, uno tarato per la temperatura minima di avviamento del sistema, che inibisce la partenza dell' unità di raffreddamento fino alla temperatura di 60°C e l'altro tarato per una temperatura massima, superata la quale si può azionare un allarme e/o interrompere il funzionamento del riduttore e un manometro per visualizzare la pressione di mandata.

Inoltre per le posizioni di montaggio con asse verticale e comunque in tutti quei casi in cui si adotta il completo riempimento di lubrificante, è necessario montare un vaso di espansione. Si consiglia, in questi casi, di impiegare il vaso di espansione GT 200.

A richiesta possono essere forniti dei componenti opzionali quali:

- flussimetro per consentire un'indicazio ne visiva del passaggio di olio;
- pressostato per segnalare, tramite commutazione di contatto elettrico, sovrapressioni all'interno del riduttore;
- centralina con regolazione continua della temperatura mediante valvola di bypass;
- filtro con differente grado di filtrazione (10, 25, 90 o 125 μm);
- termostato con differente temperatura di avviamento (50°C o 40°C)

Il collegamento dei contatti elettrici e del circuito idraulico e tutto il materiale occorrente allo scopo sono a carico del cliente.

La scelta del sistema più idoneo, va fatta in base alla potenza termica P_S che è necessario dissipare e alla differenza Δt tra la temperatura dell'olio all'interno del riduttore t_R e la temperatura ambiente t_a, con l'ausilio del seguente grafico.

Les composants fondamentaux du système auxiliaire de refroidissement sont: un échangeur de chaleur huile-air, une pompe à engrenages (à cylindrée fixe), un moteur électrique, un filtre spin-on (degré de filtration 60 mm), un rotor de ventilation coaxial à la pompe et deux thermostats à installer sur le réducteur, l'un taré pour la température minimum de démarrage du système, qui inhibe le démarrage de l'unité de refroidissement jusqu'à la température de 60°C et l'autre, taré pour une température maximum, au-delà de laquelle on peut déclencher une alarme et/ou interrompre le fonctionnement du réducteur, et un manomètre pour visualiser la pression de refoulement

De plus, pour les positions de montage avec axe vertical et de toute façon dans tous les cas où on adopte le nourrissage complet de lubrifiant, il est nécessaire de monter un vase d'expansion. Il est conseillé, dans ces caslà, d'utiliser le vase d'expansion GT 200.

Il existe, en option, des composants tels que:

- le fluxmètre, pour permettre une indication visuelle du passage de l'huile;
- le pressostat pour signaler, par commutation de contact électrique, toute surpression dans le réducteur;
- centrale avec réglage continu de la température par l'intermédiaire d'une vanne de dérivation;
- le filtre avec un degré de filtration (10, 25, 90 o 125 mm);
- thermostat avec différente tempéra ture de démarrage (50°C ou 40°C)

Le branchement des contacts électriques et du circuit hydraulique et tout le matériel utile sont à la charge du client.

Le choix du système le plus approprié doit être fait en fonction de la puissance thermique PS nécessaire à dissiper et à la différence Δt entre la température de l'huile dans le réducteur t_R et la température ambiante ta, à l'aide du graphique ci-dessous.

Los componentes fundamentales del sistema auxiliar de refrigeración son: un intercambiador de calor aceite-aire, una bomba de engranajes (de cilindrada fija), un motor eléctrico, un filtro spin-on (grado de filtración 60 mm), un ventilador coaxial respecto a la pompa y dos termostatos a instalar en el reductor, uno calibrado para la temperatura mínima de arranque del sistema, que impide el arranque de la unidad de refrigeración hasta la temperatura de 60°C y el otro calibrado para una temperatura máxima, superada la cual se puede activar una alarma y/o interrumpir el funcionamiento del reductor y un manómetro para visualizar la presión de impulsión.

Además, para las posiciones de montaje con eje vertical y de todas maneras en todos los casos en que se efectúa el llenado completo de lubricante, es necesario montar un vaso de expansión. Se aconseja, en estos casos, utilizar el vaso de expansión GT 200.

Bajo pedido se pueden proporcionar unos componentes opcionales como:

- medidor de flujo para consentir una indicación visual del paso de aceite;
- presostato para señalar, trámite conmutación de contacto eléctrico, sobrepresiones dentro del reductor;
- centralita con regulación continua de la temperatura por medio de válvula de bypass;
- filtro con distinto grado de filtración (10, 25, 90 ó 125 mm);
- termostato con diferente temperatura de arranque (50°C ó 40°C)

El conexionado de los contactos eléctri-cos y del circuito hidráulico y todo el material necesario para ello son a cargo del cliente.

La selección del sistema más idóneo debe ser efectuada sobre la base de la potencia térmica P_S que es necesario disipar y de la diferencia Δt entre la temperatura del aceite dentro del reductor t_R y la temperatura ambiente t_a, con el auxilio del siguiente gráfico.

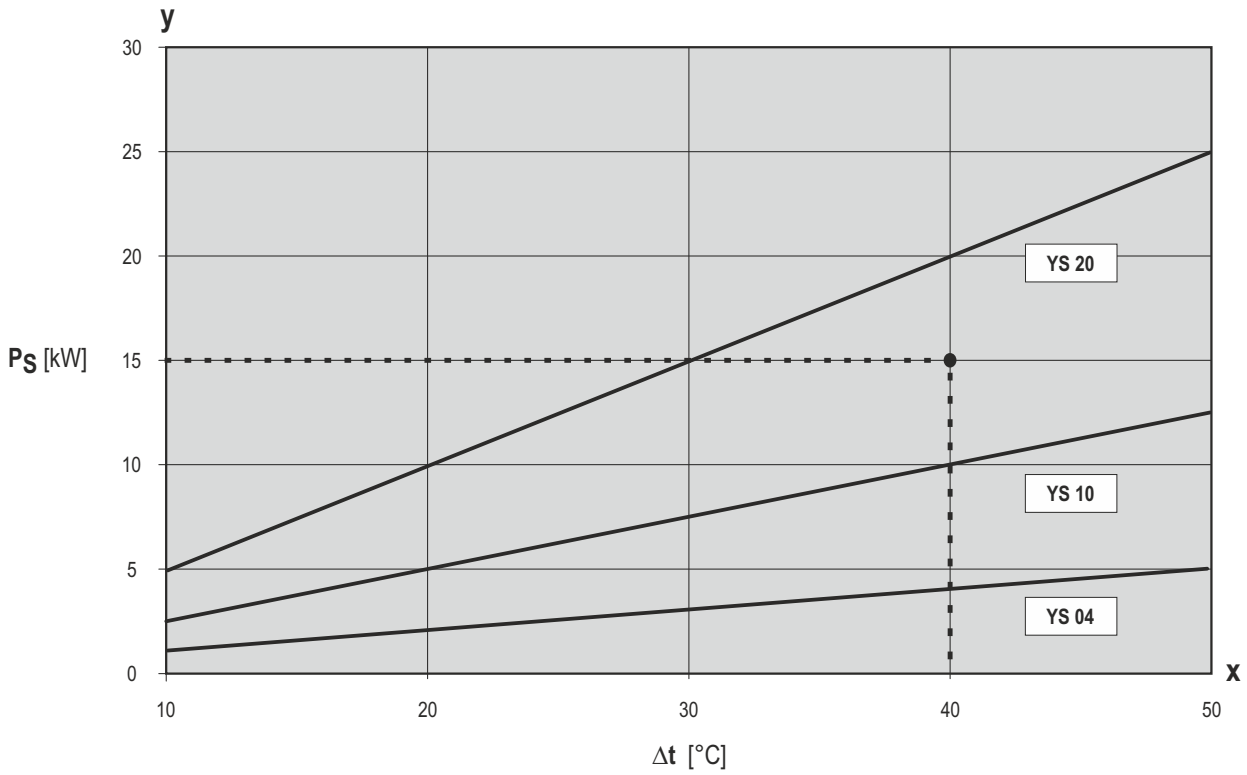

Örnek

Ortam sıcaklığı 20°C olan ve 60°C çalışan redüktörden PS=15 kW termal gücü atmak için seçilecek yardımcı soğutma sistemi, x ekseni için; Δt=60-20=40°C ve y ekseni için PS=15 kW, grafik üzerinde gösterilirse YS 20 ile işaretli alana gelecektir. Bu da demek oluyor ki en uygun sistem, YS 20'dir.

Example

An auxiliary cooling system has to be sized to get rid of a thermal power of PS=15kW from a reduction gear working at an operating temperature of 60°C with an ambient temperature of 20°C.
Finding the abscissa Δt=60-20=40°C and ordinate PS = 15 kW, point on the graph, it comes in the area marked with YS 20. This means that the suitable system is, in fact, the YS 20.

Beispiel

Ein zusätzlichen Kühlsystem soll darauf ausgelegt werden, eine Wärmeleistung von PS = 15 kW von einem Planetengetriebe abzuleiten, das mit einer Betriebstemperatur von 60°C und bei einer Umgebungstemperatur von 20°C läuft.
Es wird ein Punkt mit der X-Koordinate Δt = 60-20= 40°C und der Y-Koordinate PS =15 kW, ermittelt, der im Bereich YS 20 liegt. Am besten geeignet ist damit das System YS 20.

Yardımcı soğutma sisteminin hidrolik bağlantısı yapılmalıdır. Öyle ise yağı (ve herhangi bir aşıntı) en düşük noktadan (montaj pozisyon figürlerinde (3)) almalı ve redüktörün içindeki yağ değişimini kolaylaştırmak için giriş ağzından yeteri kadar uzaklıktaki bir noktadan sağlanmalıdır. Eğer giriş ağzı deliği pompanın akışını önlemeye yeteri kadar büyük değilse, 2 veya daha fazla giriş ağzı noktası çukurlaşma riskine karşılık öngörülebilir. Çok kademeli redüktörlerde 2 veya daha fazla bağlantı delikleri kullanılabilir.

The hydraulic connection of the auxiliary cooling system must be done so as to intake the oil (and any detritus) from the lowest point (point (3) in the assembly positions figures) and have the delivery from a point far enough away from the intake to facilitate changing the oil from inside the reduction gear. If the intake hole is not big enough to get rid of the pump's flow, two or more intake points must be foreseen to guarantee against the risk of cavitation. Two or more connection holes may also be used for delivery, for example, in the case of multi-stage reduction gears.

Der Hydraulikanschluss vom zusätzlichen Kühlsystem muss so erfolgen, dass das Öl (mit eventuellen Verunreinigungen) an der am weitesten unten liegenden Stelle (Punkt (3) auf den Abbildungen mit der Montageposition) angesaugt und die Druckleitung an einer Stelle angelegt wird, die sich in ausreichender Entfernung von der Ansaugleitung befindet, um den Ölaustausch im Planetengetriebe zu fördern. Sollte die Ansaugöffnung nicht groß genug sein, um den Durchsatz der Pumpe zu bedienen, müssen zwei oder mehr Ansaugstellen vorgesehen werden, um Hohlsogbildung zu vermeiden. Auch für die Druckleitung können zwei oder mehr Anschlüsse vorgesehen werden, zum Beispiel bei mehrstufigen Planeten-getrieben.

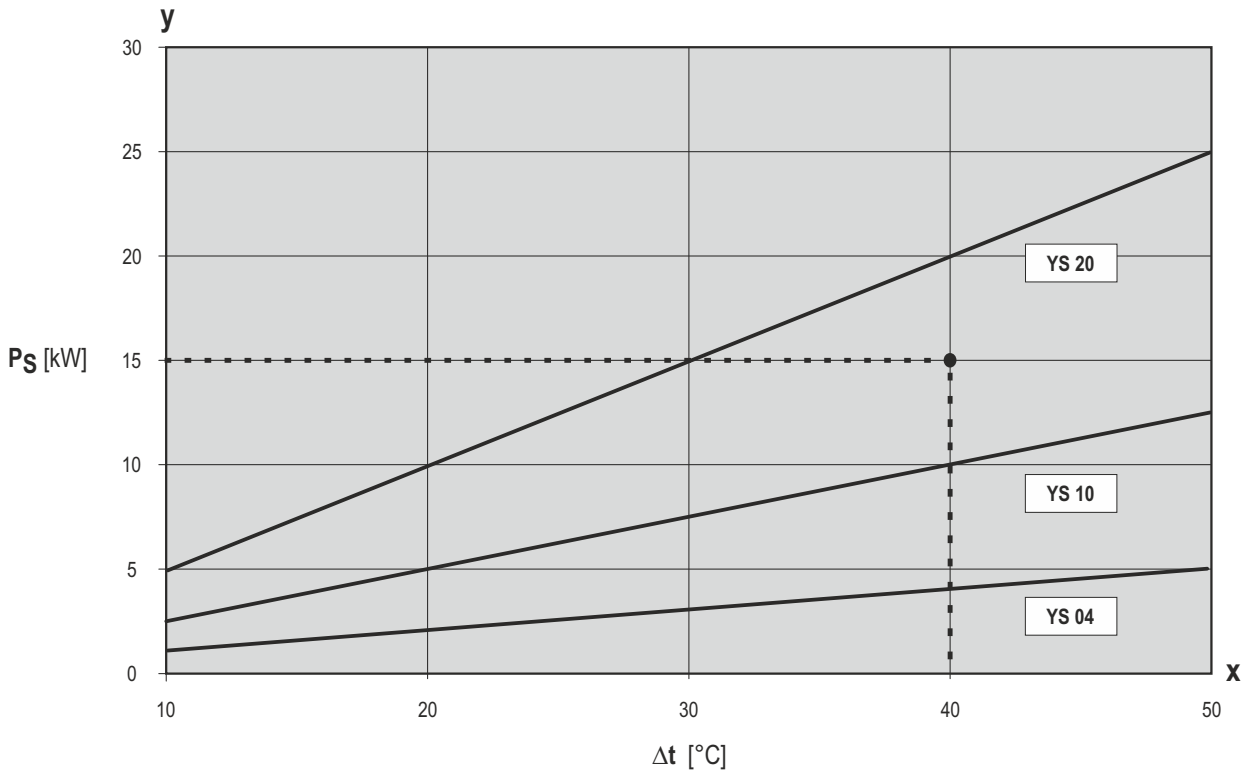

Esempio

Si deve dimensionare un sistema ausiliario di raffreddamento per smaltire una potenza termica PS = 15 kW da un riduttore che lavora alla temperatura di esercizio di 60°C, con temperatura ambiente di 20°C.
Individuando sul grafico il punto di ascissa Δt =60-20=40°C ed ordinata PS = 15 kW, questo ricade nella zona indicata con YS 20. Dunque il sistema idoneo è proprio il YS 20.

Exemple

Il faut dimensionner un système auxiliaire de refroidissement pour évacuer une puissance thermique PS = 15 kW d'un réducteur qui fonctionne à la température de fonctionnement de 60°C., à une température ambiante de 20°C.
En prenant sur le graphique le point d'abscisse Dt =60 - 20 = 40°C et d'ordonnée PS = 15 kW, cela tombe dans la zone indiquée par YS 20. Le système adéquat est donc bien le YS 20.

Ejemplo

Se debe dimensionar un sistema auxiliar de refrigeración para eliminar una potencia térmica PS = 15 kW de un reductor que trabaja a la temperatura de funcionamien to de 60°C, con temperatura ambiente de 20°C. Individuando en el gráfico el punto de abscisa Δt = 60-20 = 40°C y ordenada PS = 15 kW, éste queda en la zona indicada con YS 20. Por lo tanto el sistema idóneo es precisamente el sistema YS 20.

Il collegamento idraulico del sistema ausiliario di raffreddamento va eseguito in modo da aspirare l'olio (ed eventuali detriti) dal punto più in basso (punto (3) nelle figure delle posizioni di montaggio) ed effettuare la mandata da un punto sufficientemente distante dall'aspirazione, in modo da agevolare il ricambio d'olio all'interno del riduttore. Qualora la dimensione del foro di aspirazione fosse insufficiente a smaltire la portata della pompa, occorre prevedere due o più punti di aspirazione, in modo da scongiurare il rischio di cavitazione. Anche per la mandata possono essere impiegati due o più fori di collegamento, ad esempio nel caso di riduttori multistadio.

Le raccordement hydraulique du système auxiliaire de refroidissement doit être fait de manière à aspirer l'huile (et tout déchet éventuel) du point le plus bas (indiqué par (3) sur les figures des positions de montage) et effectuer le refoulement d'un point suffisamment distant de l'aspiration, de manière à faciliter le rechange d'huile dans le réducteur. Si la dimension du trou d'aspiration est insuffisante pour évacuer le débit de la pompe, il faut prévoir deux points d'aspiration ou plus, de manière à prévenir le risque de cavitation. Pour le refoulement aussi, il est possible d'utiliser deux trous de raccordement ou plus, par exemple avec des réducteurs multiétagés.

El conexionado hidráulico del sistema auxiliar de refrigeración se debe realizar de manera que se aspire el aceite (y eventuales detritos) desde el punto más bajo (punto (3) en las figuras de las posiciones de montaje) y efectuar la impulsión desde un punto suficientemente distante de la aspiración, a fin de facilitar el recambio de aceite dentro del reductor. Si las medidas del agujero de aspiración fuesen insuficientes para tratar el caudal de la bomba, es preciso prever dos o más puntos de aspiración, a fin de evitar el riesgo de cavitación. También para la impulsión se pueden utilizar dos o más agujeros de conexión, por ejemplo en el caso de reductores multi-etapa.

Aşağıdaki şema, yardımcı soğutma sisteminin redüktöre bağlanması ile ilgili birkaç örnek vermektedir. Burada giriş ağzı ve servis sağlayan hidrolik bağlantıların yanısıra sistemin çalışmasını düzenleyen termostatların elektrik bağlantılarını görebilirsiniz.

Soğutma birimi ile redüktör arasındaki boruların boyutları hesaba katılmalı, çalıştırma sıcaklık aralığında (30°C...90°C) genel basınç çizgisinin 2...3 bar düşme oranını aşmamasına dikkat edilmelidir.

The figure gives a few examples of connecting the auxiliary cooling system to the reduction gear, where you can see the intake and delivery hydraulic connections as well as the electrical connections of the thermostats that regulate system operation.

The size of the delivery pipes must take into account the distance between the cooling unit and the reduction gear, being careful not to exceed an overall line pressure drop of 2...3 bar in the operating temperature range (30°C...90°C).

Die Abbildung zeigt einige Anschlussbeispiele vom Kühlsystem an das Planetengetriebe mit Angabe der Hydraulikanschlüsse von Saug- und Druckleitung und der elektrischen Anschlüsse der Thermostate, die den Betrieb vom Kühlsystem regeln.

Die Auslegung der Druckleitung muss den Abstand zwischen Kühlsystem und Planetengetriebe berücksichtigen. Dabei muss darauf geachtet werden, dass im Bereich der Betriebstemperatur (30°C...90°C) ein Druckabfall von insgesamt 2...3 Bar in der Leitung nicht überschritten wird.

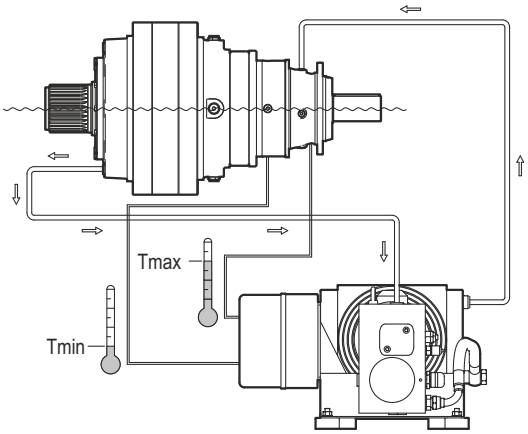

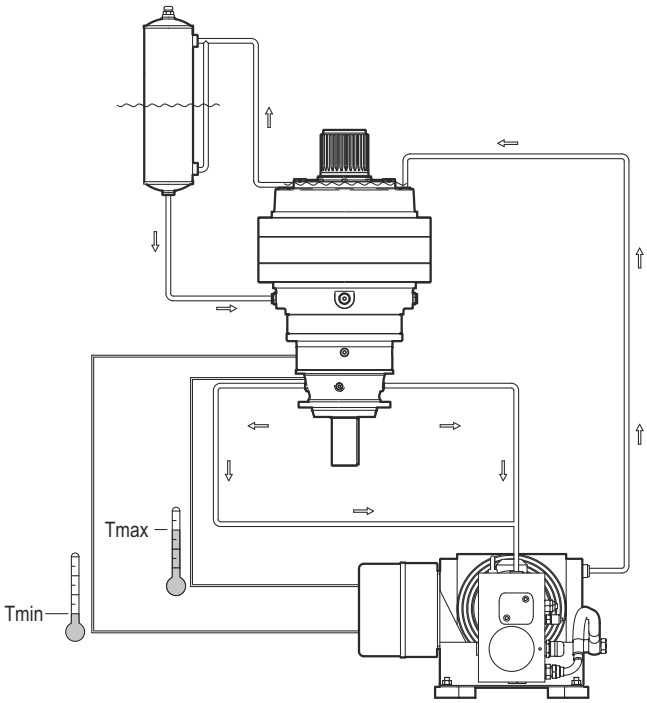

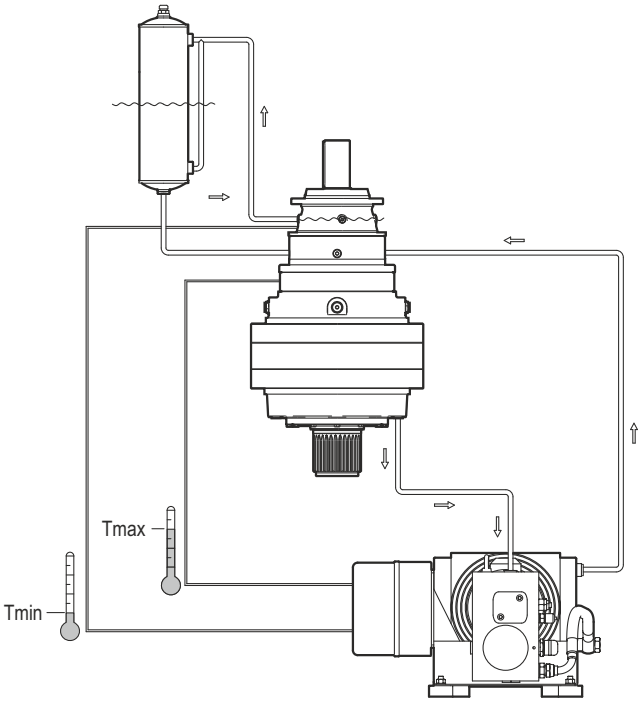

In figura sono riportati alcuni esempi di collegamento del sistema ausiliario di raffreddamento al riduttore, in cui sono mostrati i collegamenti idraulici di aspirazione e mandata e i collegamenti elettrici dei termostati che regolano il funzionamento del sistema.

Il dimensionamento della tubazione di mandata deve tenere conto della distanza tra unità di raffreddamento e riduttore, avendo cura di non superare, nel campo di temperatura di esercizio (30°C...90°C), una caduta di pressione complessiva della linea di 2...3 bar.

La figure montre des exemples de raccordement du système auxiliaire de refroidissement au réducteur, où l'on peut voir les raccordements hydrauliques d'aspiration et de refoulement et les branchements électriques des thermostats qui règlent le fonctionnement du système.

Le dimensionnement des tuyaux de refoulement doit tenir compte de la distance entre unité de refroidissement et réducteur, en veillant à ne pas dépasser, sur la plage des températures de fonctionnement (30°C...90°C), une baisse de pression totale de la ligne de 2...3 bars.

En la figura se presentan algunos ejemplos de coñexión con el reductor del sistema auxiliar de refrigeración, ejemplos en los cuales se muestran las conexiones hidráulicas de aspiración e impulsión y las conexiones eléctricas de los termostatos que regulan el funcionamiento del sistema.

El dimensionamiento de la tubería de impulsión debe tener en cuenta la distancia entre la unidad de refrigeración y el reductor, procurando no superar, en el rango de temperatura de funcionamiento (30°C...90°C), una caída de presión total de la línea de 2...3 bar.

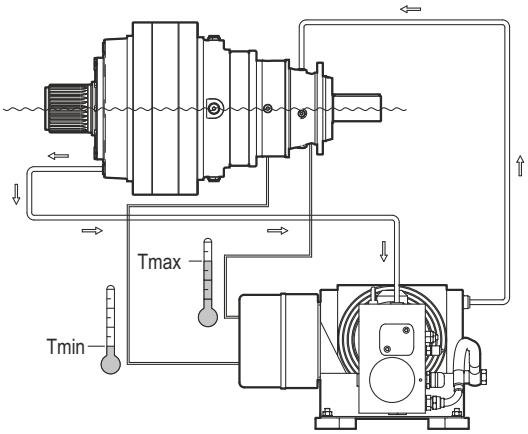

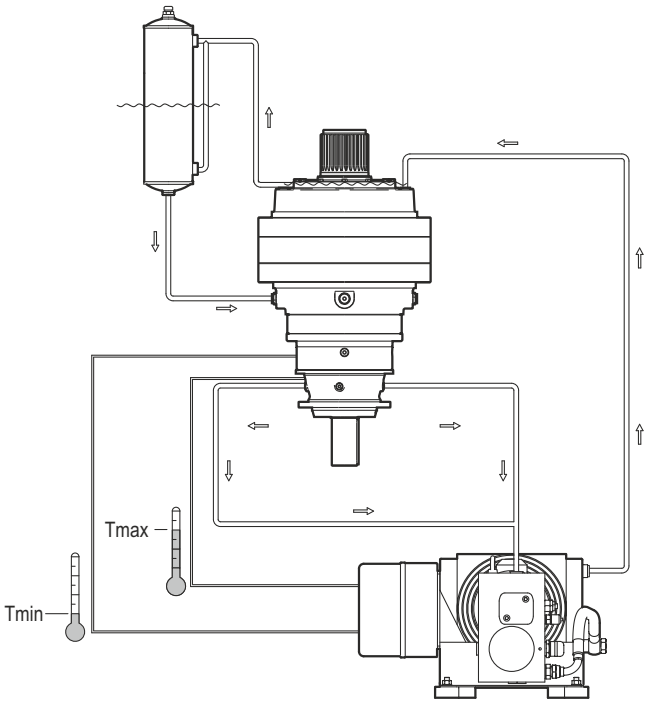

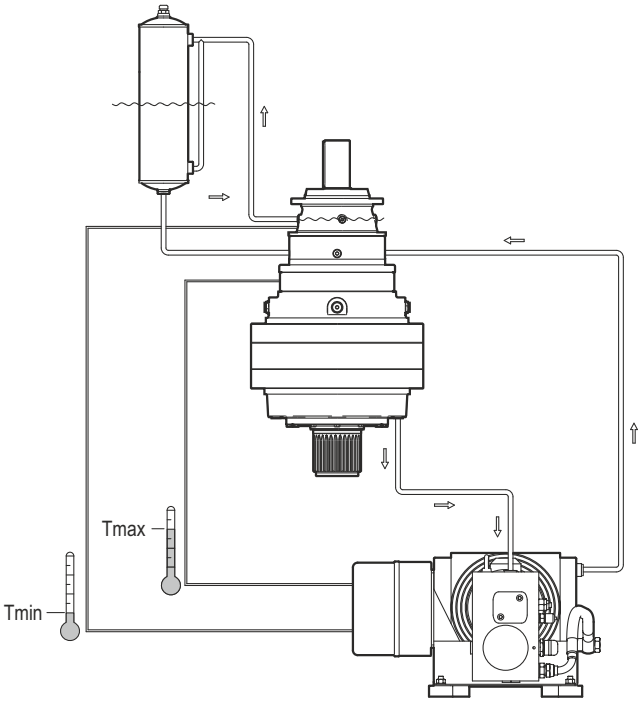

PGR DRIVE TECHNOLOGIES

TR	MONTAJ POZİSYONLARI	EN	MOUNTING POSITIONS	DE	EINBAUPOSITION
IT	POSIZIONOI DI MONTAGGIO	FR	POSITIONS DE MONTAGE	ES	POSICIONES DE MONTAJE

M-P

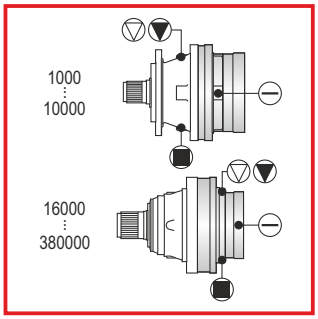

B5

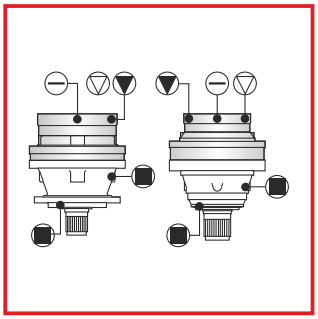

V1

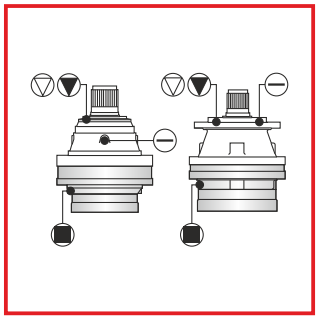

V3

F

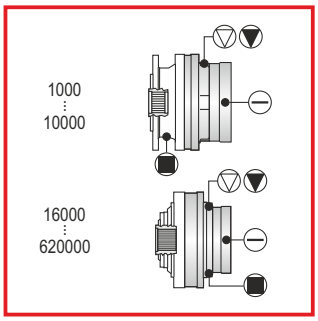

B5

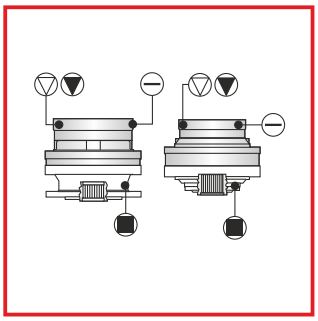

V1

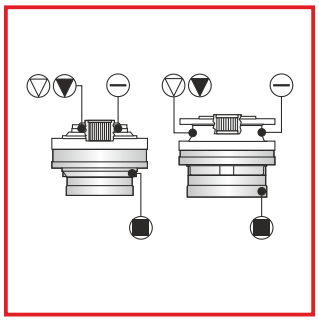

V3

FS

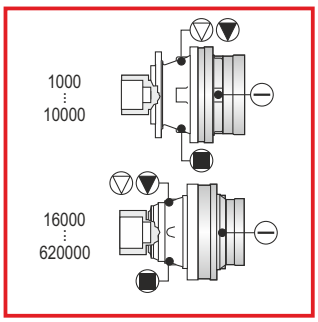

B5

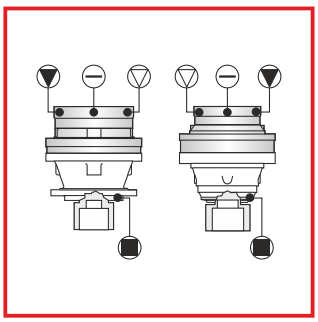

V1

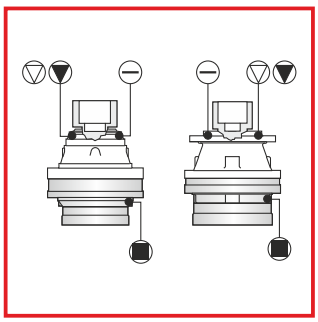

V3

CPC

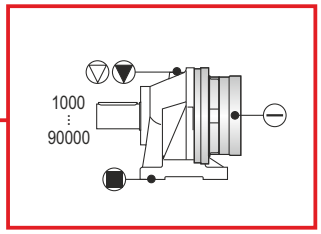

B3

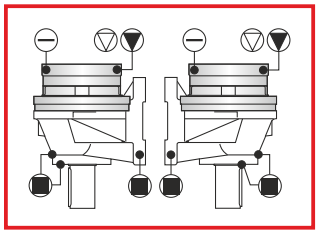

V2

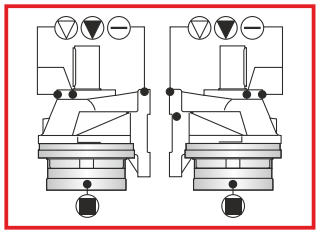

V4

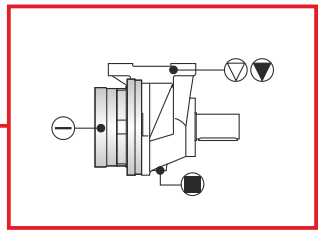

B4

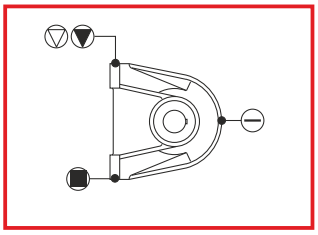

B6

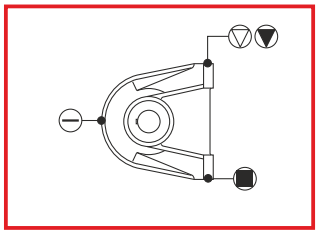

B7

Yağ tapası
Ölstopfen
Oil plugs
Tappi olio
Bouchons huile
Tapón de aceite

Havalandırma tapası
Entlüftungstopfen
Vent plug
Tappo sfiato
Bouchon à évent
Tapón de venteo

Doldurma tapası
Einfüllstopfen
Filling plug
Tappo carico
Bouchon remplissage
Tapón de carga

Seviye tapası
Ölstandstopfen
Level plug
Tappo livello
Bouchon jauge
Tapón de nivel

Boşaltma tapası
Drain plug
Ablassstopfen
Tappo scarico
Bouchon vidange
Tapón de descarga

N.B

Montaj flanşı bilgileri planet teknik sayfalarında gösterilmektedir (sayfa 301-704).

The mounting flange orientation is shown in each planetary gears technical sheets (page 301-704).

Die Ausfuehrung der Befestigungsvorrichtung (Flansch, Bohrung) ist in den Datenblaettern der Getriebe auf den Seiten 301-704 ersichtlich.

L'orientamento della foratura della flangia di fissaggio è come illustrato nelle schede dei dati dimensionali dei riduttori (pag. 301-704).

L'oriéntation de la flasque de montage est indiquée dans chaque fiche technique réducteur (page 301-704).

La orientación del perforado de la brida de fijación se ilustra en las fichas de los datos dimensionales de los reductores (Pág. 301-704).

TR MONTAJ POZİSYONLARI	EN MOUNTING POSITIONS	DE EINBAUPOSITION
IT POSIZIONOI DI MONTAGGIO	FR POSITIONS DE MONTAGE	ES POSICIONES DE MONTAJE

M-P

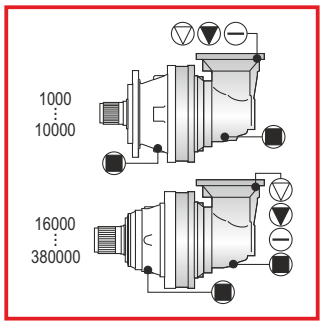

B51

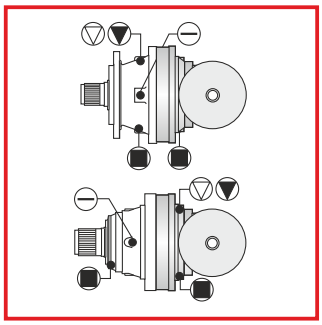

B55

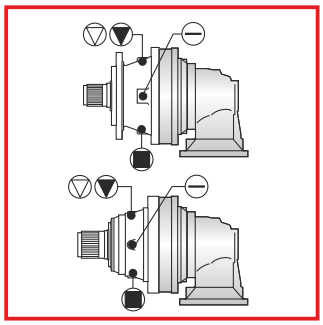

B53

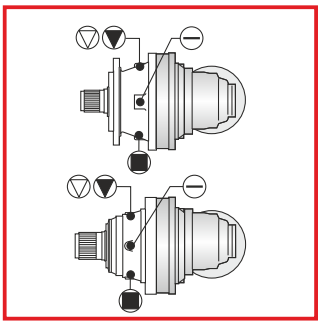

B54

F

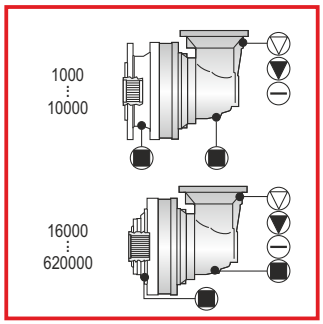

B51

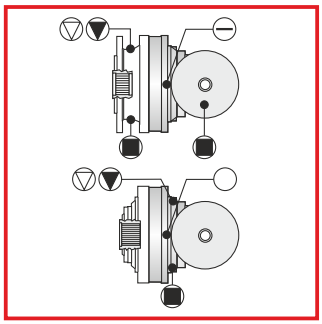

B55

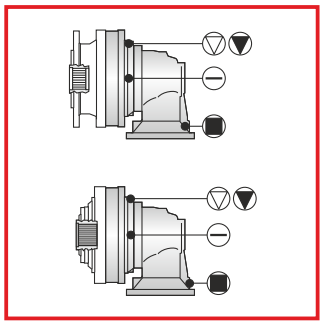

B53

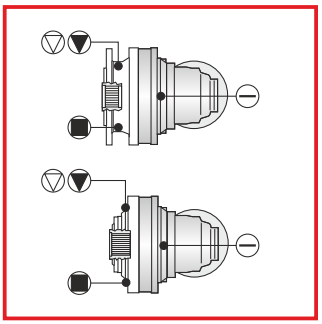

B54

FS

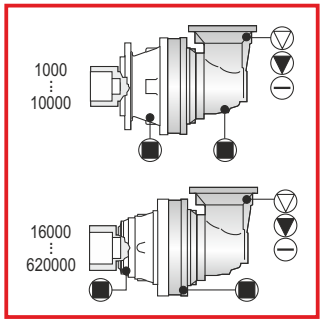

B51

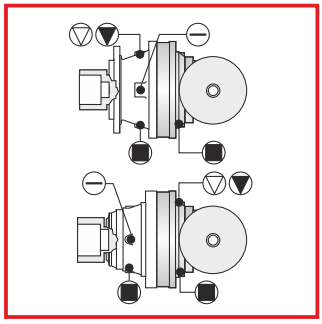

B55

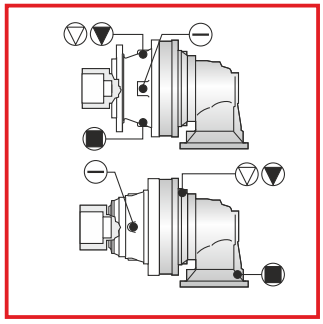

B53

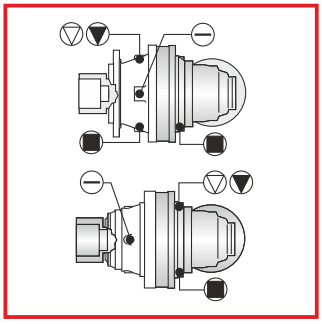

B54

CPC

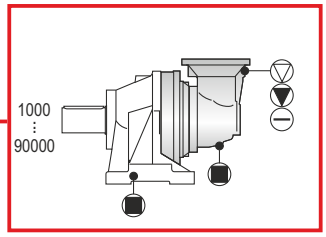

B56

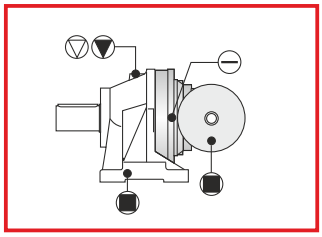

B60

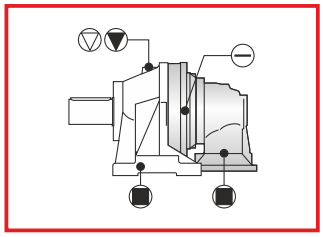

B58

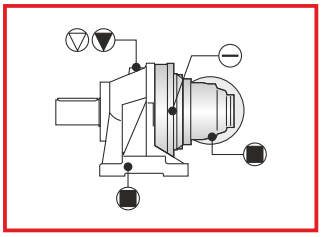

B62

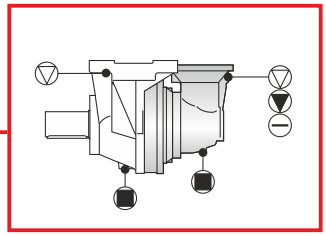

B57

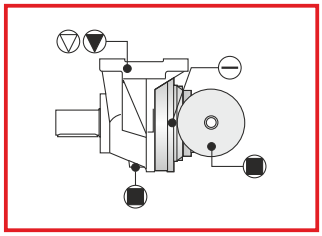

B61

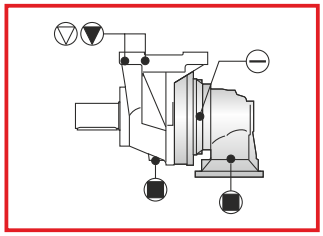

B59

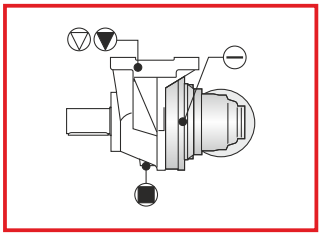

B63

PGR DRIVE TECHNOLOGIES

TR MONTAJ POZİSYONLARI	EN MOUNTING POSITIONS	DE EINBAUPOSITION
IT POSIZIONOI DI MONTAGGIO	FR POSITIONS DE MONTAGE	ES POSICIONES DE MONTAJE

M-P

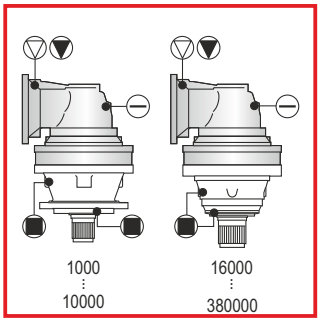

V15

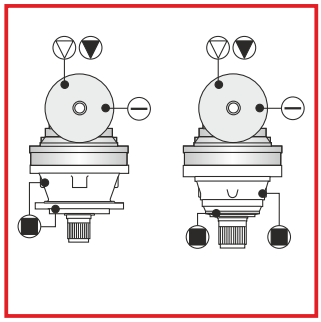

V16

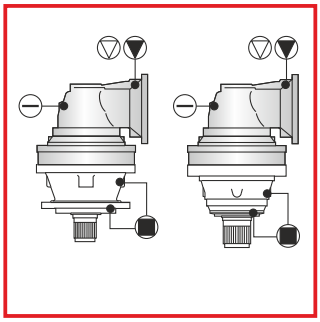

V17

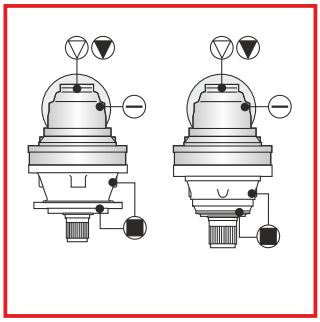

V18

F

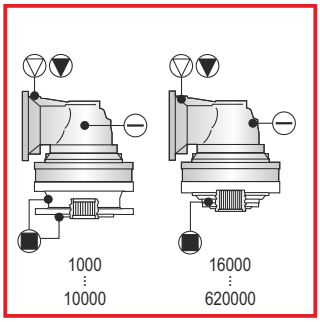

V15

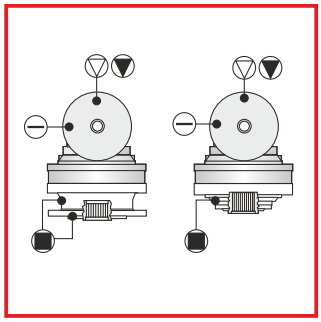

V16

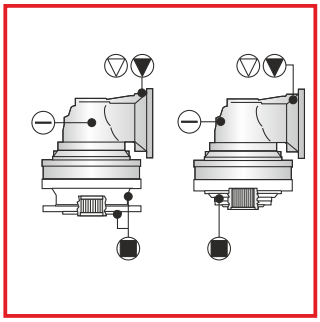

V17

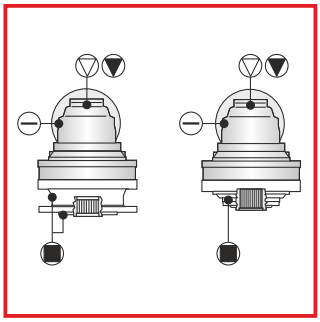

V18

FS

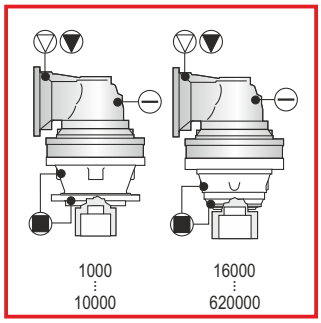

V15

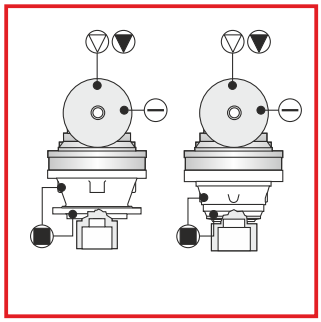

V16

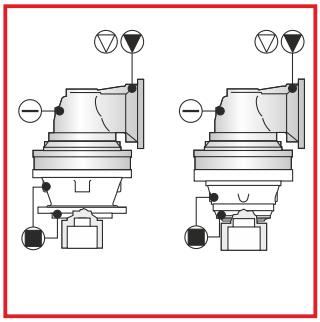

V17

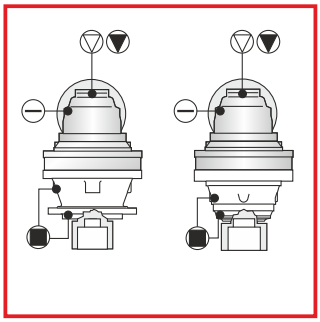

V18

CPC

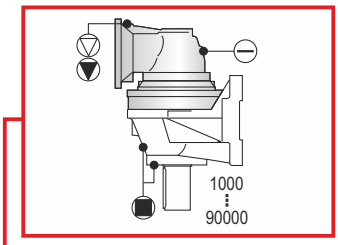

V53

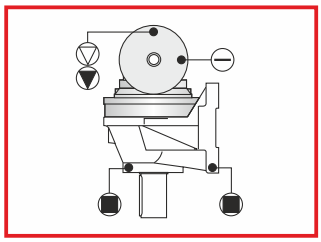

V52

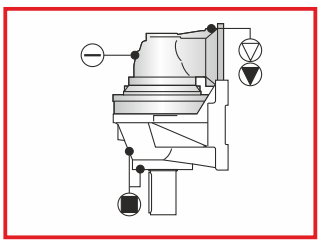

V54

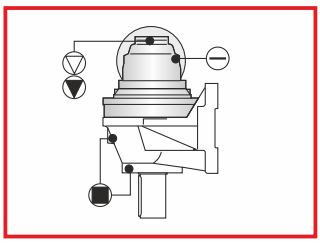

V55

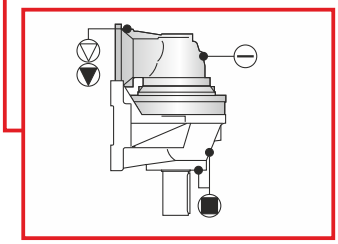

V49

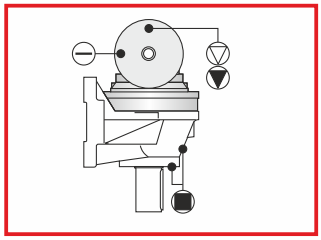

V48

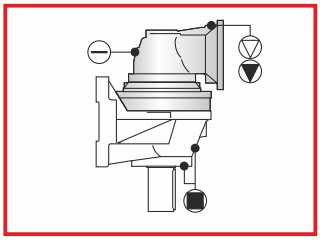

V50

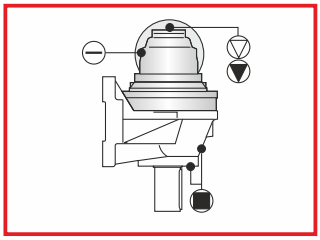

V51

TR MONTAJ POZİSYONLARI	EN MOUNTING POSITIONS
DE EINBAUPOSITION	IT POSIZIONOI DI MONTAGGIO
FR POSITIONS DE MONTAGE	ES POSICIONES DE MONTAJE

M-P

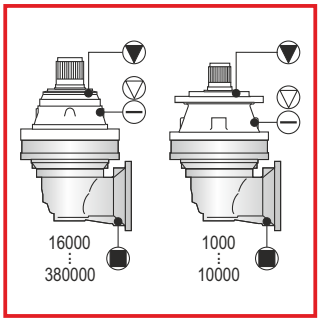

V35

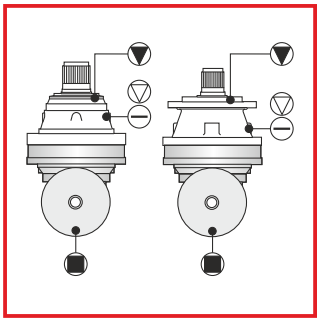

V36

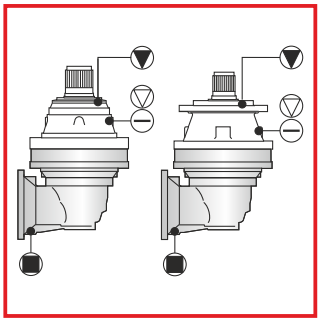

V37

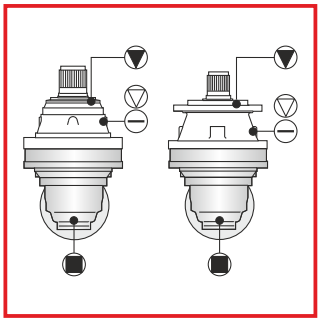

V38

F

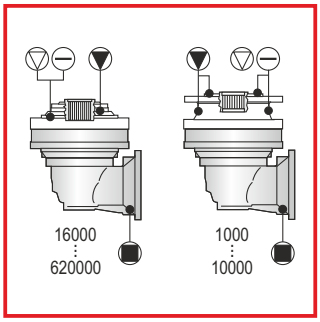

V35

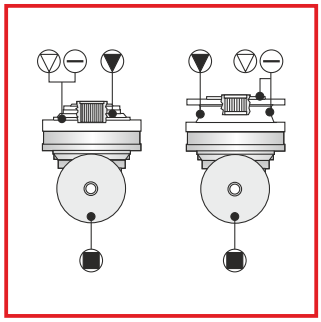

V36

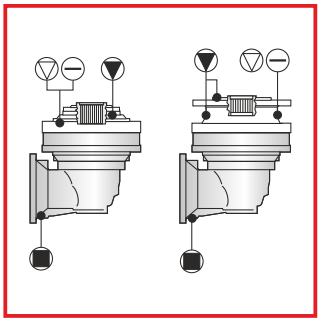

V37

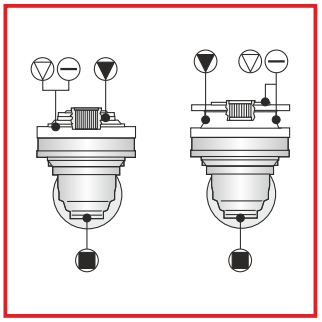

V38

FS

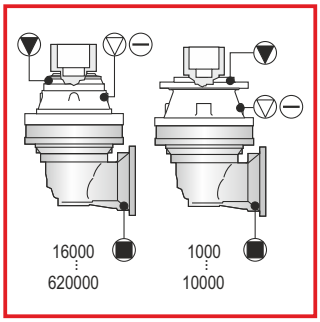

V35

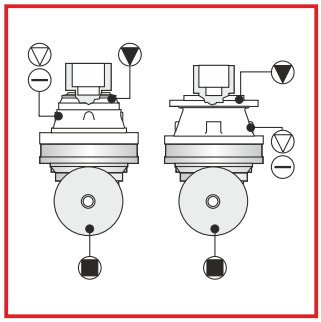

V36

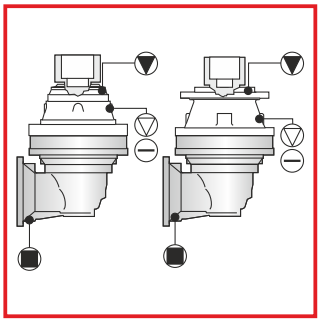

V37

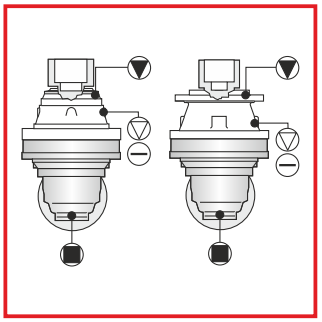

V38

CPC

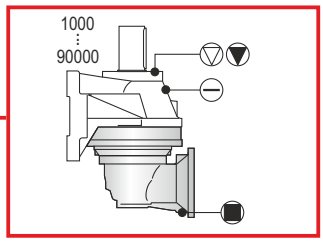

V42

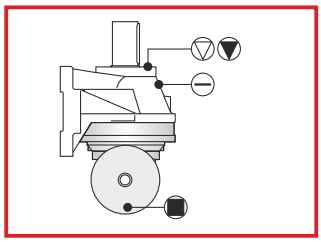

V40

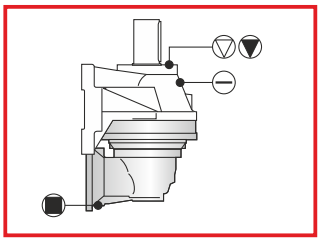

V41

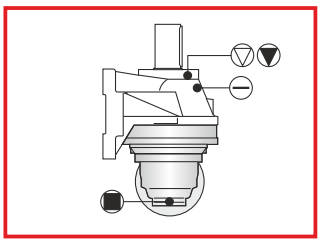

V43

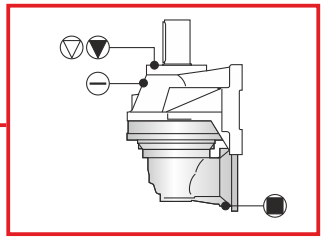

V46

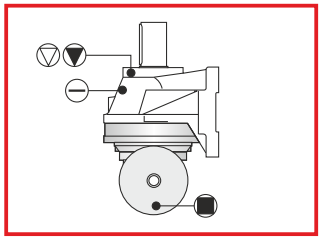

V44

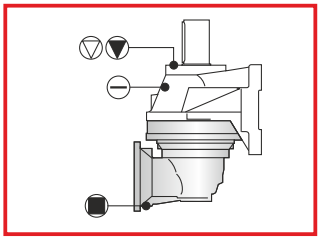

V45

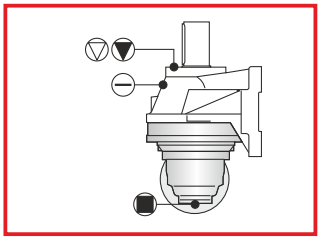

V47

TR SONSUZ DİŞLİLİ REDÜKTÖR ADAPTÖRLERİ

SONSUZ DİŞLİLİ REDÜKTÖR ADAPTÖRLERİ

PGR, kombine planet dişli ünitelerini aşağıdaki gibi tedarik edebilir:

1) Hazır montajlı sonsuz dişlili redüktörler ile.
2) Ön ayarı yapılmış sonsuz dişlili redüktörler ile.

İlave olarak, planet dişli ünitelerinin yağlamasının sonsuz dişlili redüktörlerin yağlamasından ayrı olduğunu hatırlatmak isteriz.

EN WORM GEARBOX ADAPTORS

WORM GEARBOX ADAPTORS

PGR can supply the combined reduction units as follows:

1) Complete of worm reduction units.
2) Preset for worm reduction units.

Furthermore, we would like to remind you that the lubrication of the planetary gear units is separated from the lubrication of the worm reduction units.

DE ANSCHLUSS FÜR SCHNECKENGETRIEBE

ANSCHLUSS FÜR SCHNECKENGETRIEBE

PGR kann kombinierte Getriebe wie folgt liefern:

1) Komplett mit Schneckengetriebe.
2) Vorrichtung für Schnecken - getriebe.

Weiterhin weisen wir darauf hin, das die Schmierung der Planetengetriebe getrennt von der des Schneckengetriebes erfolgt.

IT PREDISPOSIZIONI PER RIDUTTORI A VITE SENZA FINE

PREDISPOSIZIONI PER RIDUTTORI A VITE SENZA FINE

PGR può fornire i riduttori combinati nelle seguenti configurazioni:

1) Completi di riduttore a vite senza fine.
2) Predisposti per riduttori a vite senza fine.

Inoltre ricordiamo che i riduttori epicicloidali hanno la lubrificazione separate da quella del riduttore a vite senza fine.

FR ADAPTATION POUR REDUCTEURS A VIS SANS FIN

ADAPTATION POUR REDUCTEURS A VIS SANS FIN

Les réducteurs combinés peuvent être fournis de la manière suivante:

1) Equipés d'un réducteur à vis sans fin.
2) Equipés pour recevoir un réducteur à vis sans fin.

En outre, nous vous rappelons que le réducteurs planétaires ont une lubrification séparée de celle, du réducteur à vis sans fin.

ES ACOPLAMIENTO PARA REDUCTORES DE TORNILLO SIN FIN

ACOPLAMIENTO PARA REDUCTORES DE TORNILLO SIN FIN

PGR puede suministrar las unidades de reducción combinadas del siguiente modo:

1) Completos con reductor de tornillo sin fin.
2) Predispuestos para reductores de tornillo sin fin.

Además, queremos recordar que los reductores epicicloidales tienen la lubricación separada de aquella del reductor de tornillo sin fin.

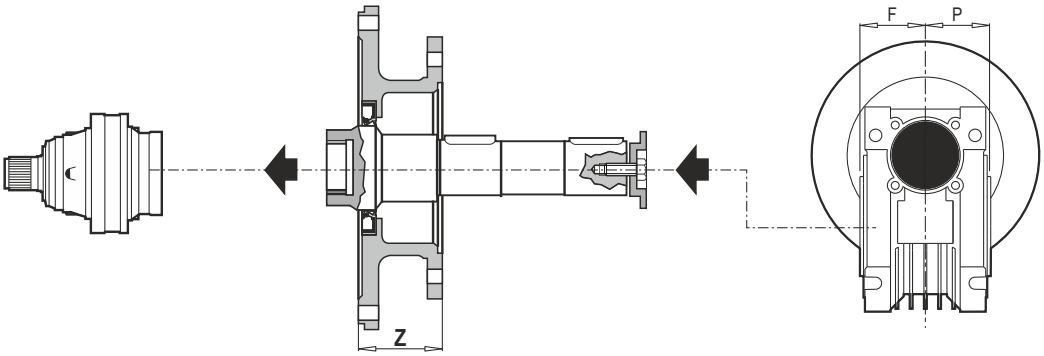

SONSUZ DİŞLİLİ REDÜKTÖR ADAPTÖRLERİ WORM GEARBOX ADAPTORS ANSCHLUSS FÜR SCHNECKENGETRIEBE PREDISPOSIZIONI PER RIDUTTORI VITE SENZA FINE ADAPTATIONS POUR REDUCTEURS A VIS SANS FIN ACOPLAMIENTO PARA REDUCTORES DE TORNILLO SIN FIN			
Tip - Type - Type - Tipo - Typ - Tipos	Z	Kod / Code Bestell Nr. / Codice Code / Código	
PMRV 050 / PRV 050	82	2074.017.004	A
PMRV 063 / PRV 063	82	2074.017.005	
PMRV 075 / PRV 075	57	2074.017.006	
PMRV 090 / PRV 090	57	2074.017.007	
PMRV 110 / PRV 110	64	2074.057.002	B
PMRV 130 / PRV 130	64	2074.057.001	

SONSUZ DİŞLİLİ REDÜKTÖRLER WORM REDUCTION UNITS SCHNECKENGETRIEBE RIDUTTORI VITE SENZA FINE REDUCTEURS A VIS SANS FIN REDUCTORES DE TORNILLO SIN FIN		
Tip - Type - Type Tipo - Typ - Tipos	F	P
PMRV 050 / PRV 050	46	46
PMRV 063 / PRV 063	56	56
PMRV 075 / PRV 075	60	60
PMRV 090 / PRV 090	70	70
PMRV 110 / PRV 110	77.5	77.5
PMRV 130 / PRV 130	85	85

	A	B	
	Z	Z	Z+13.5
PL 1000	1-2-3-4	—	—
PL 1600	1-2-3-4	—	—
PL 2500	1-2-3-4	—	1
PL 5000	1-2-3-4	—	1
PL 7000	2-3-4	1	2
PL 10000	2-3-4	1	2
PL 16000	2-3-4	1	2
PL 18000	3-4	2	3
PL 25000	3-4	2	3
PL 30000	3-4	2	3
PL 35000	3-4	2	3
PL 50000	3-4	2	3

	A	B	
	Z	Z	Z+13.5
PL 65000	4	3	4
PL 90000	4	3	4
PL 130000	4-5	3	4
PL 170000	4-5	3	4
PL 220000	4-5	3	4
PL 250000	5	4	5
PL 300000	5	4	5
PL 380000	5	4	5
PL 460000	5	4	5
PL 550000	5	4	5
PL 620000	—	5	—

Not: 1-2-3-4-5 rakamları planet dişli ünitesinin kademe sayısını göstermektedir.
N.B.: Numbers 1-2-3-4-5 refer to the number of stages of the planetary gear unit.
N.B.: Die Ziffern 1-2-3-4-5 geben die Anzahl der Getriebestufen an.
N.B.: i numeri 1-2-3-4-5 indicano il numero di stadi dei riduttori.
N.B.: Les numéros 1-2-3-4-5 indiquent le nombre d'étages des réducteurs.
Nota: Los números 1-2-3-4-5 indican el número de etapas de los reductores.

TR SONSUZ DİŞLİLİ REDÜKTÖR ADAPTÖRLERİ

EN WORM GEARBOX ADAPTORS

DE ANSCHLUSS FÜR SCHNECKENGETRIEBE

IT PREDISPOSIZIONI PER RIDUTTORI A VITE SENZA FINE

FR ADAPTATION POUR REDUCTEURS A VIS SANS FIN

ES ACOPLAMIENTO PARA REDUCTORES DE TORNILLO SIN FIN

PMRV

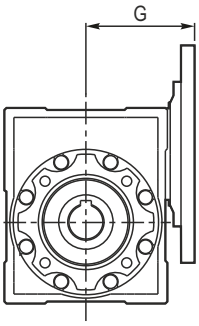

SONSUZ DİŞLİLİ REDÜKTÖRLER / WORM REDUCTION UNITS SCHNECKENGETRIEBE / RIDUTTORI VITE SENZA FINE REDUCTEURS A VIS SANS FIN / REDUCTORES DE TORNILLO SIN FIN	
Tip - Type - Type - Tipo - Typ - Tipo	G
PMRV 050 PAM 063 / 071 / 080	80
PMRV 063 PAM 071 / 080 / 090	95
PMRV 075 PAM 071 / 080 / 090 / 100 / 112	112.5
PMRV 090 PAM 080 / 090 / 100 / 112	129.5
PMRV 110 PAM 080 / 090 / 100 / 112 / 132	160
PMRV 130 PAM 090 / 100 / 112 / 132	180

B5/B14 Motor bağlantı flanşlı sonsuz dişlili redüktör (PAM/IEC).
Worm gear reduction unit with input adaptor for electric motor (PAM/IEC).
Schneckengetriebe vorgesehen für Elektromotoranbau (PAM/IEC).
Riduttore vite senza fine con predisposizione per motore elettrico (PAM/IEC).
Réducteur à vis sans fin avec prédisposition pour moteur éléctrique (PAM/IEC).
Reductor de tornillo sin fin con acoplamiento para motor eléctrico (PAM/IEC).

PRV

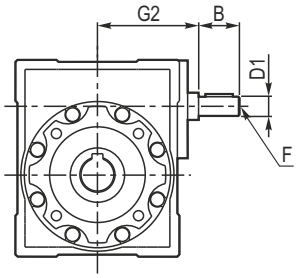

GİRİŞ MİLİ UZUNLUĞU / INPUT SHAFT LENGTH ANTRIEBSWELLENÄNGE / SPORGENZA ALBERO DI ENTRATA ARBRE D'ENTREE MALE / SALIENTE EJE DE ENTRADA				
Tip - Type - Type - Tipo - Typ - Tipo	G2	B	D1 (j6)	F
PRV 050	72	30	14	M6
PRV 063	90	40	19	M6
PRV 075	105	50	24	M8
PRV 090	125	50	24	M8
PRV 110	142	60	28	M10
PRV 130	162	80	30	M10

Mil girişli sonsuz dişlili redüktör
Worm gear reduction unit with male input shaft.
Schneckengetriebe mit Zapfwelle am Eingang.
Riduttore vite senza fine con albero maschio in ingresso.
Réducteur à vis sans fin avec arbre mâle en entrée.
Reductor de tornillo sin fin con eje macho en entrada.

Sonsuz dişlili redüktörleri seçmek için lütfen PGR Teknik Departmanı ile iletişime geçiniz.

To select the worm reduction unit please contact the PGR Technical Department.

Für die auswahl des Schneckengetriebes kontaktieren sie bitte dem Technische Abteilung von PGR.

Per la selezione del riduttore vite senza fine contattare il Servizio Tecnico PGR.

Pour choisir le réducteur à vis sans fin, s'addresser an Service Technico PGR.

Para la elección del reductor de tornillo sin fin se aconseja ponerse en contacto con el Servicio Técnico de PGR.

Montaj pozisyonları

Mounting positions

Einbauposition

Posizioni di montaggio

Positions de montage

Posiciones de montaje

F
M
P
FS

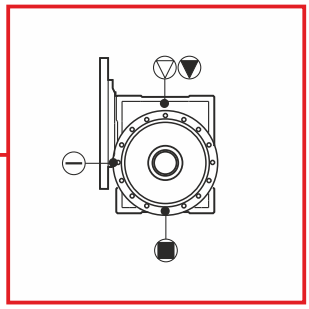

C1

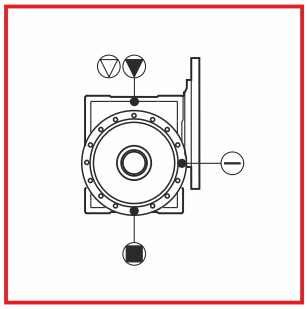

C2

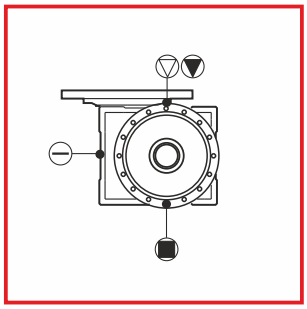

C3

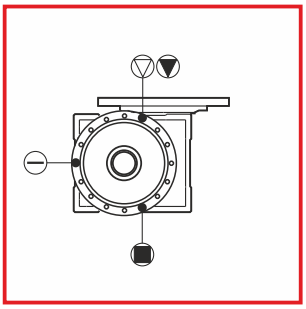

C4

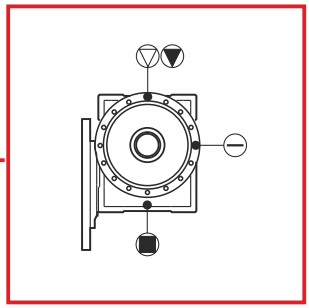

C5

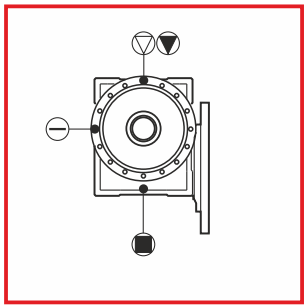

C6

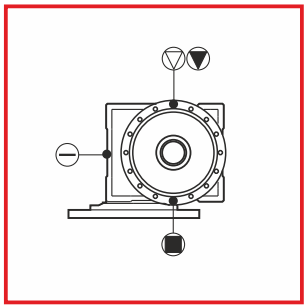

C7

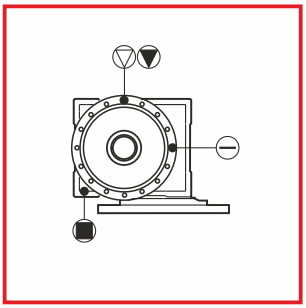

C8

TR SONSUZ DİŞLİLİ REDÜKTÖR ADAPTÖRLERİ
EN WORM GEARBOX ADAPTORS
DE ANSCHLUSS FÜR SCHNECKENGETRIEBE
IT PREDISPOSIZIONI PER RIDUTTORI A VITE SENZA FINE
FR ADAPTATION POUR REDUCTEURS A VIS SANS FIN
ES ACOPLAMIENTO PARA REDUCTORES DE TORNILLO SIN FIN

CPC

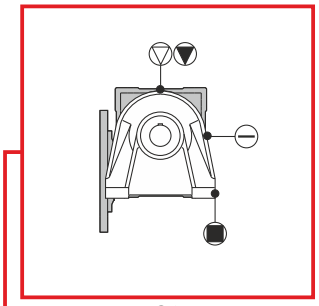
C9

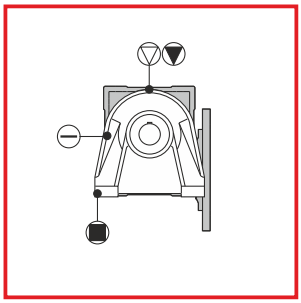
C10

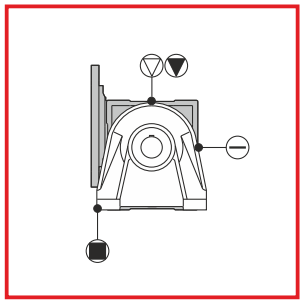
C11

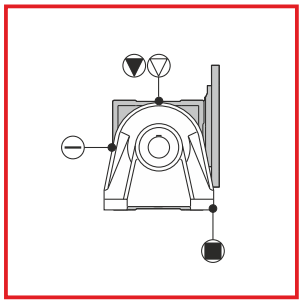
C12

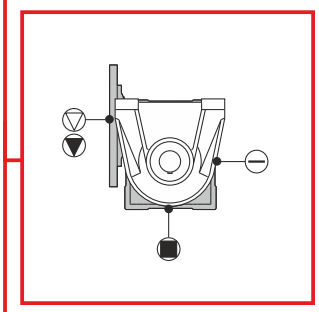
C13

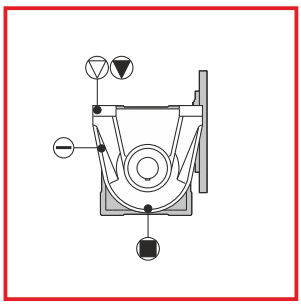
C14

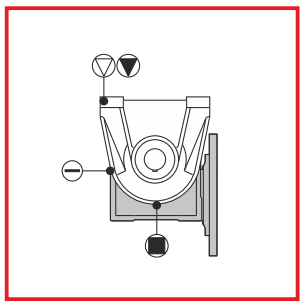
C15

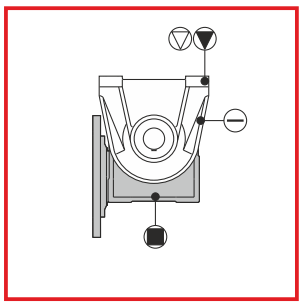
C16

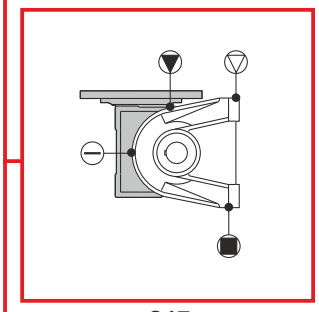
C17

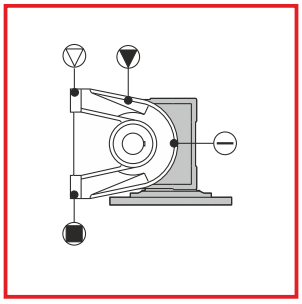
C18

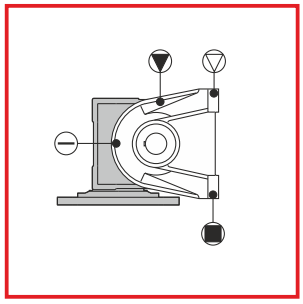
C19

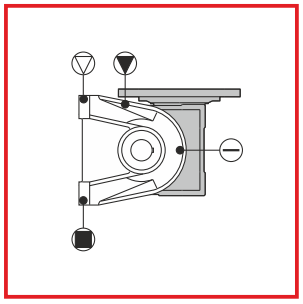
C20

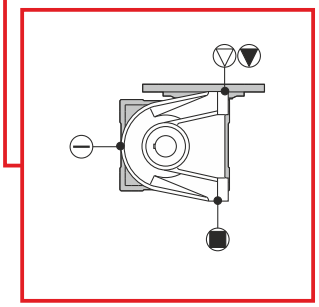
C21

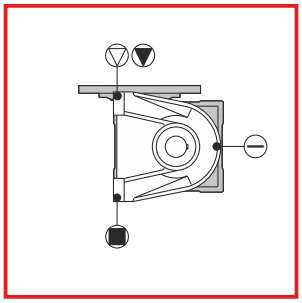
C22

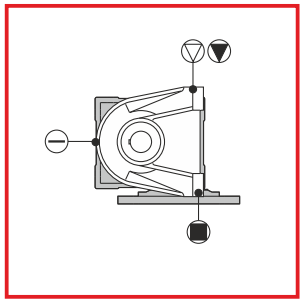
C23

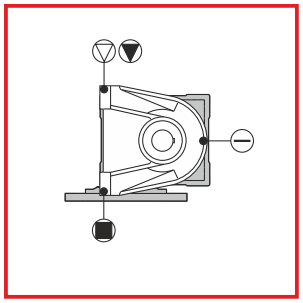
C24

Yağ tapaları	Havalandırma tapası	Doldurma tapası	Seviye tapası	Boşaltma tapası
Oil plugs	Vent plug	Filling plug	Level plug	Drain plug
Ölstopfen	Entlüftungstopfen	Einfüllstopfen	Ölstandstopfen	Ablassstopfen
Tappi olio	Tappo sfiato	Tappo carico	Tappo livello	Tappo scarico
Bouchons huile	Bouchon à évent	Bouchon remplissage	Bouchon jauge	Bouchon vidange
Tapón de aceite	Tapón de venteo	Tapón de carga	Tapón de nivel	Tapón de descarga

NOT.
Montaj flanşının özellikleri her bir planet dişli ünitesinin teknik sayfalarında gösterilmiştir (sayfa 301-704).

N.B.
L'orientamento della foratura della flangia di fissagio è come illustrato nelle schede dei dati dimensionali dei riduttori (pag. 301-704).

N.B.
The mounting flange orientation is shown in each planetary gears technical sheets. (page 301-704).

N.B.
L'oriéntation de la flasque de montage est indiquée dans chaque fiche technique réducteur (page 301-704).

N.B.
Die Ausfuehrung der Befestigung - vorrichtung (Flansch, Bohrung) ist in den Datenblaettern der Getriebe auf den Seiten 301-704 ersichtlich.

N.B.
La orientación del perforado de la brida de fijación se ilustra en las fichas de los datos dimensionales de los reductores (Pág. 301-704).

TR SONSUZ DİŞLİLİ REDÜKTÖR ADAPTÖRLERİ	EN WORM GEARBOX ADAPTORS	DE ANSCHLUSS FÜR SCHNECKENGETRIEBE
IT PREDISPOSIZIONI PER RIDUTTORI A VITE SENZA FINE	FR ADAPTATION POUR REDUCTEURS A VIS SANS FIN	ES ACOPLAMIENTO PARA REDUCTORES DE TORNILLO SIN FIN

M-P

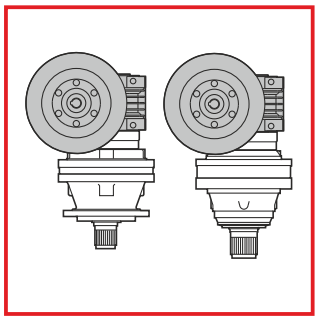
C25

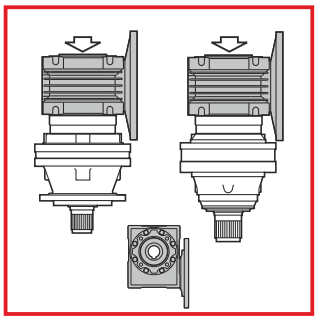
C26

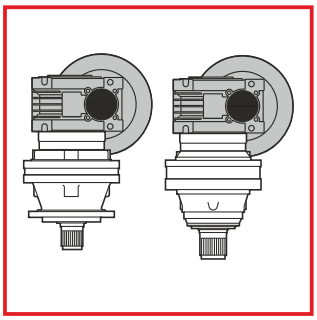
C27

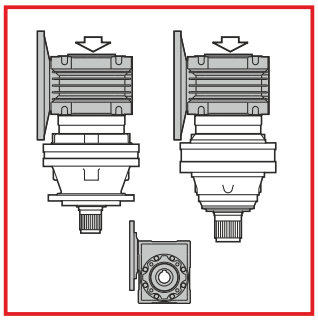
C28

F

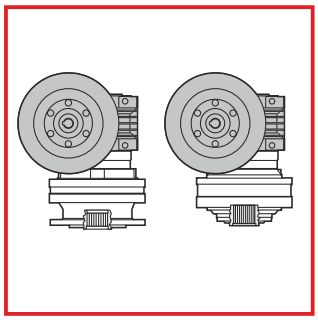
C25

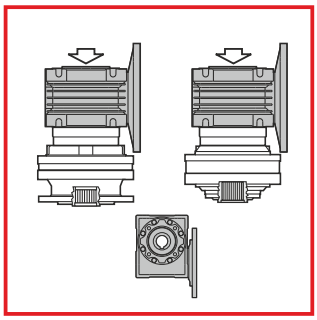
C26

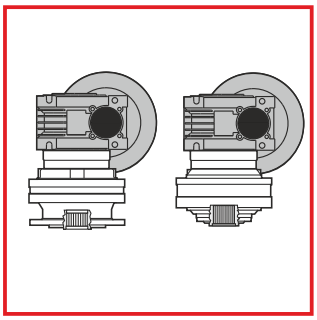
C27

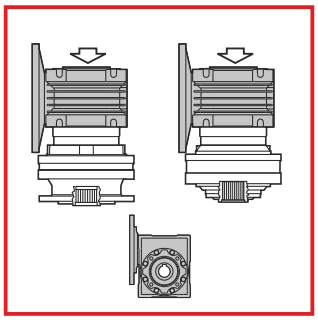
C28

FS

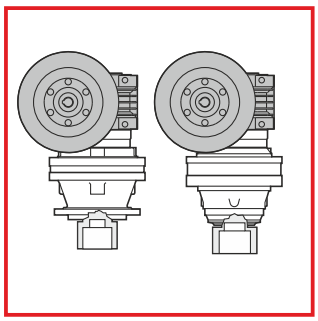
C25

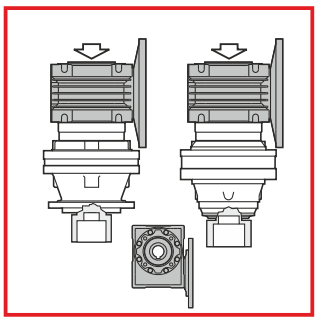
C26

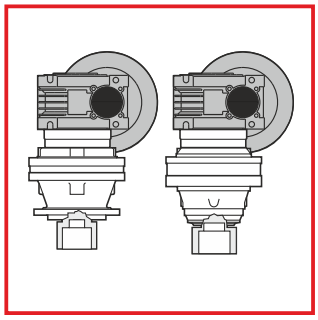
C27

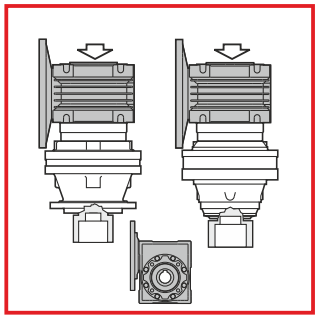
C28

CPC

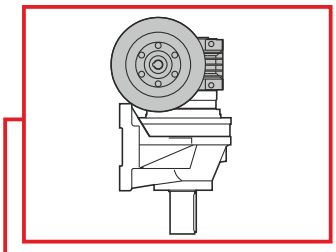
C41

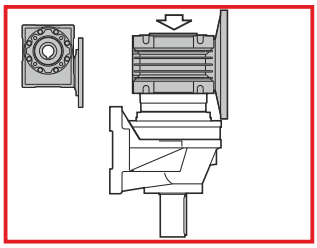
C42

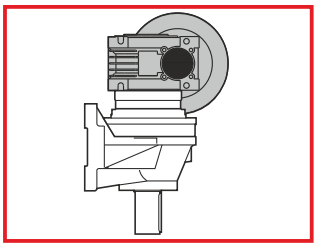
C43

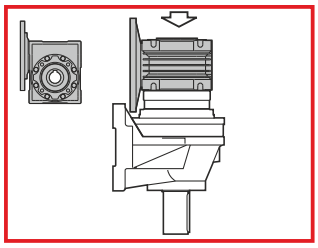
C44

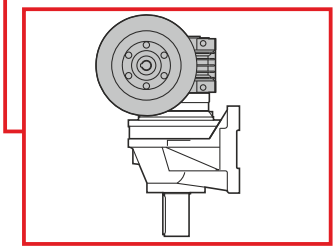
C45

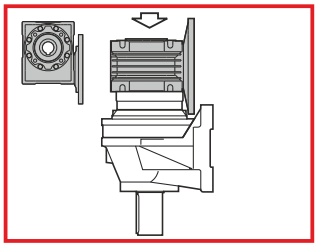
C46

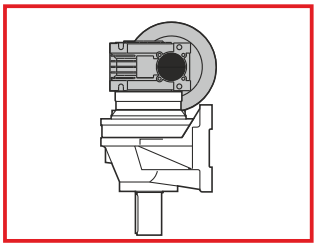
C47

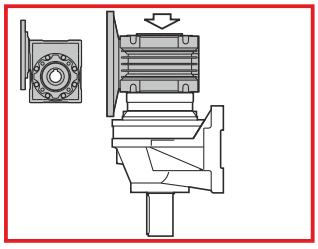
C48

PGR DRIVE TECHNOLOGIES

TR SONSUZ DİŞLİLİ REDÜKTÖR ADAPTÖRLERİ

EN WORM GEARBOX ADAPTORS

DE ANSCHLUSS FÜR SCHNECKENGETRIEBE

IT PREDISPOSIZIONI PER RIDUTTORI A VITE SENZA FINE

FR ADAPTATION POUR REDUCTEURS A VIS SANS FIN

ES ACOPLAMIENTO PARA REDUCTORES DE TORNILLO SIN FIN

M-P

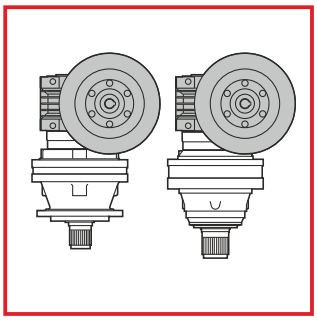

C29

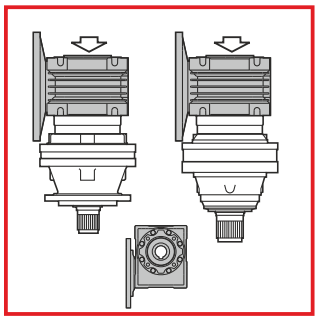

C30

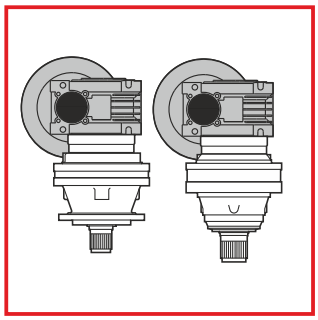

C31

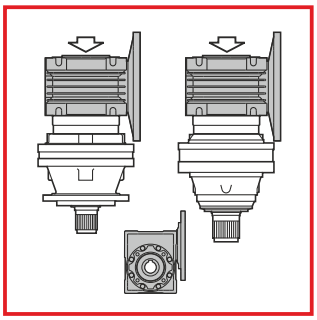

C32

F

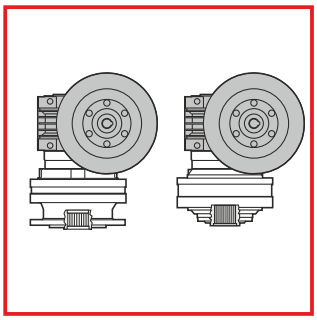

C29

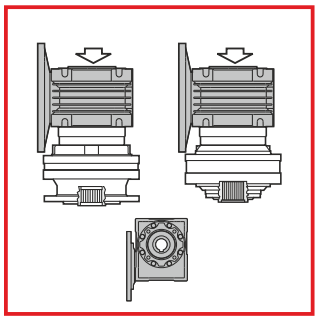

C30

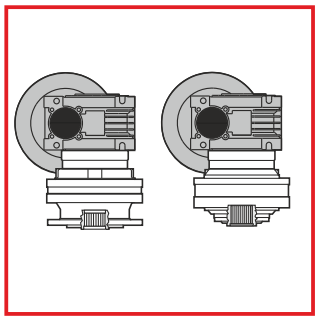

C31

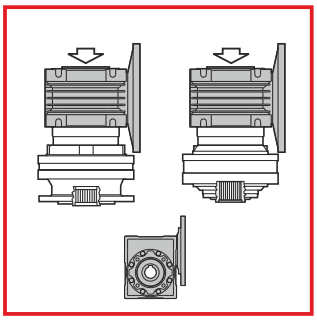

C32

FS

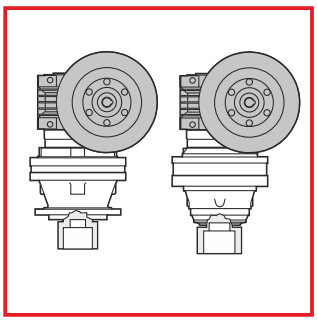

C29

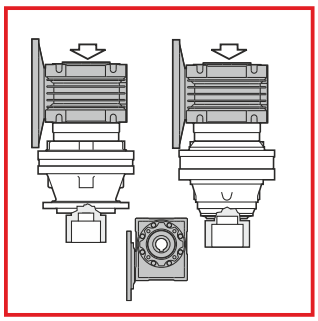

C30

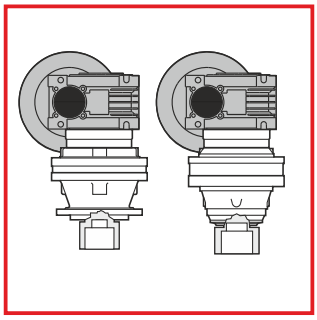

C31

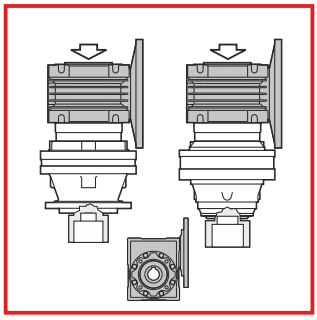

C32

CPC

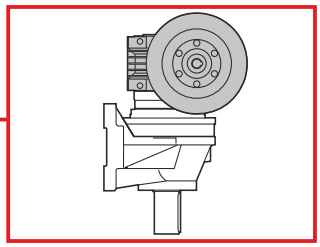

C49

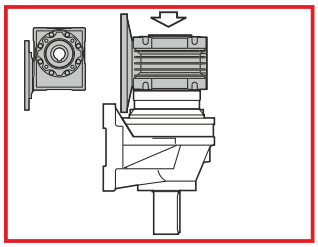

C50

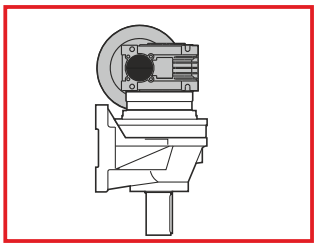

C51

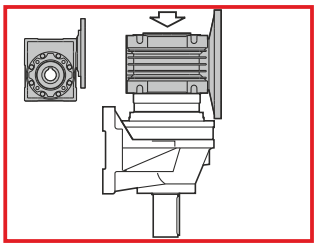

C52

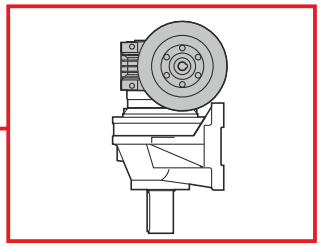

C53

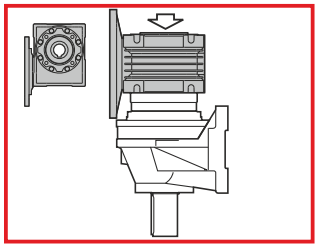

C54

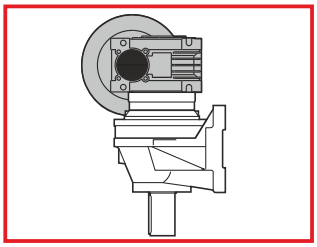

C55

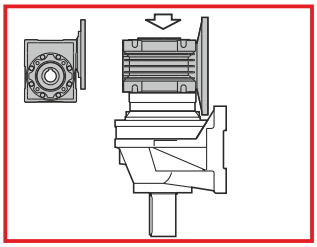

C56

TR SONSUZ DİŞLİLİ REDÜKTÖR ADAPTÖRLERİ	EN WORM GEARBOX ADAPTORS	DE ANSCHLUSS FÜR SCHNECKENGETRIEBE
IT PREDISPOSIZIONI PER RIDUTTORI A VITE SENZA FINE	FR ADAPTATION POUR REDUCTEURS A VIS SANS FIN	ES ACOPLAMIENTO PARA REDUCTORES DE TORNILLO SIN FIN

M-P

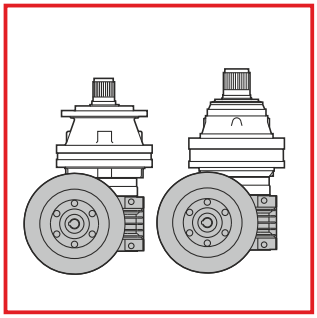

C33

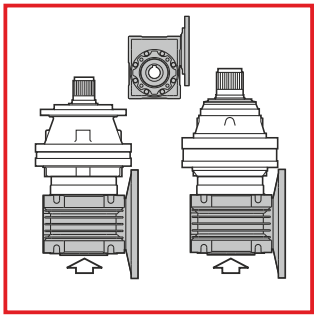

C34

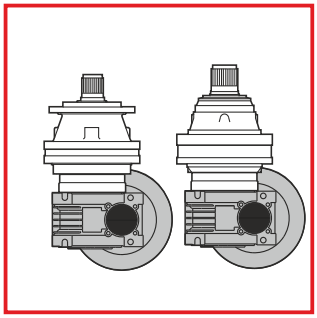

C35

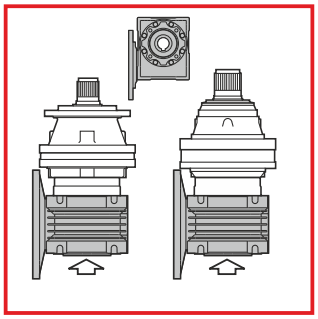

C36

F

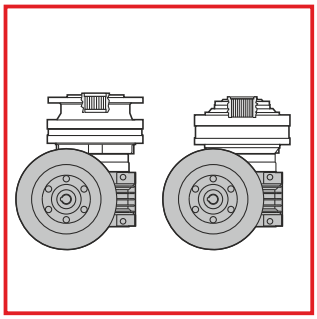

C33

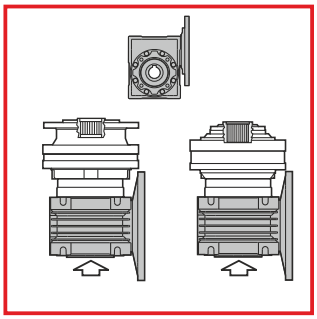

C34

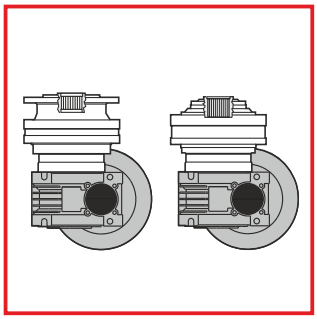

C35

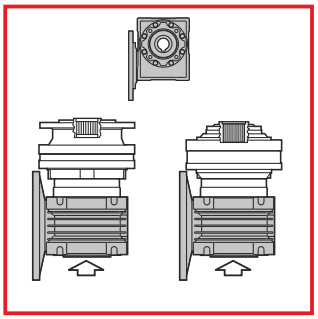

C36

FS

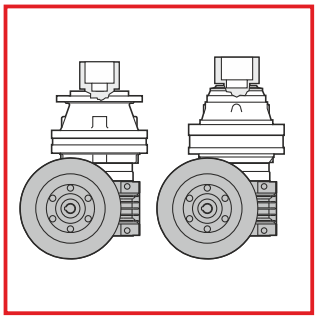

C33

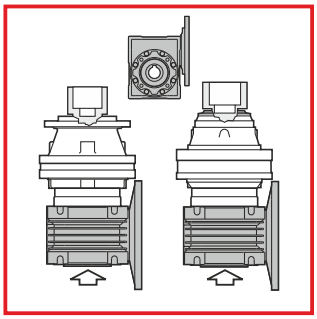

C34

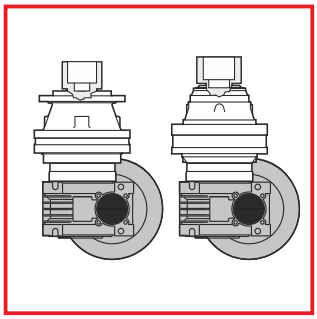

C35

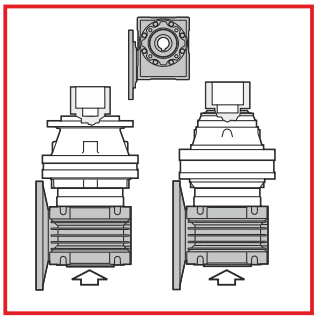

C36

CPC

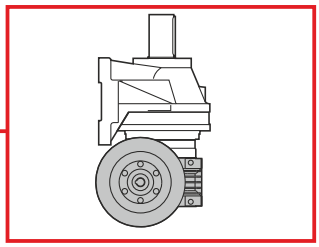

C57

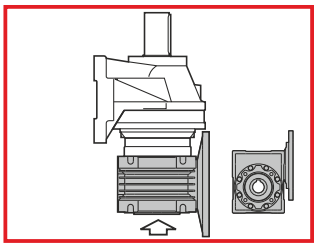

C58

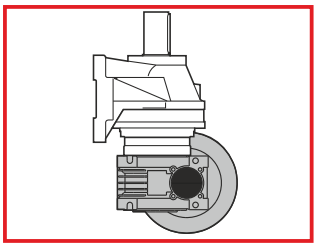

C59

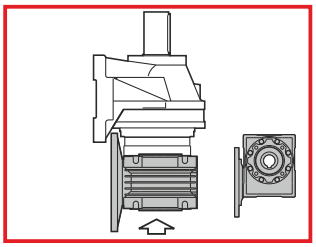

C60

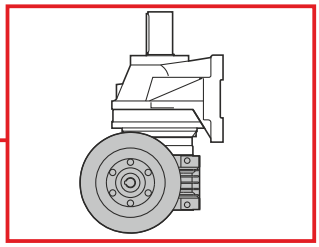

C61

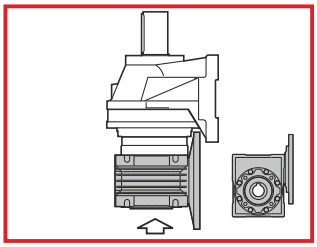

C62

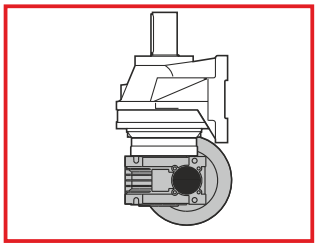

C63

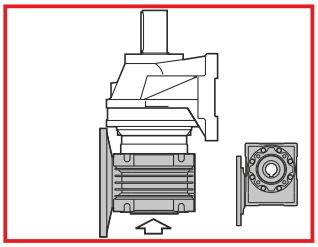

C64

PGR DRIVE TECHNOLOGIES

TR SONSUZ DİŞLİLİ REDÜKTÖR ADAPTÖRLERİ

EN WORM GEARBOX ADAPTORS

DE ANSCHLUSS FÜR SCHNECKENGETRIEBE

IT PREDISPOSIZIONI PER RIDUTTORI A VITE SENZA FINE

FR ADAPTATION POUR REDUCTEURS A VIS SANS FIN

ES ACOPLAMIENTO PARA REDUCTORES DE TORNILLO SIN FIN

M-P

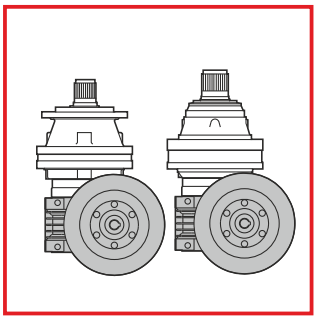
C37

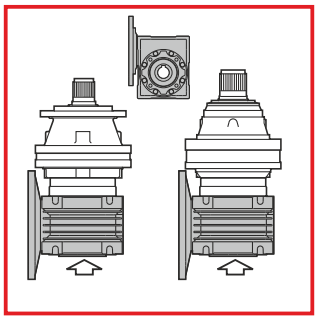
C38

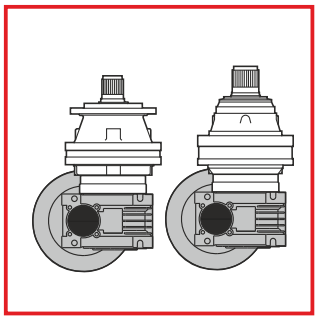
C39

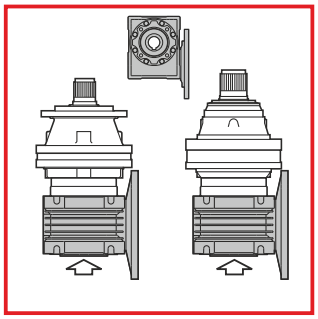
C40

F

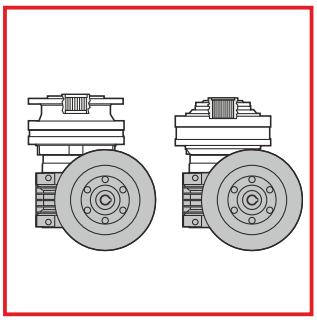
C37

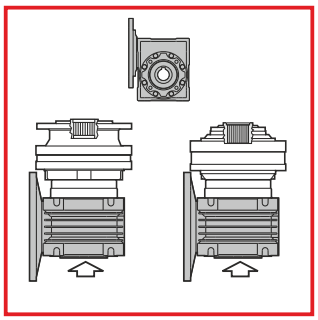
C38

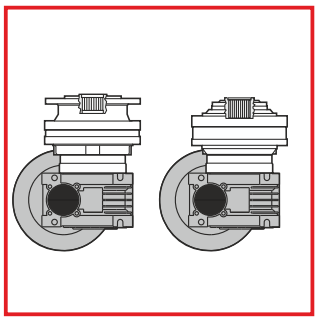
C39

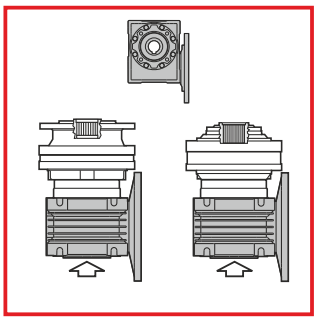
C40

FS

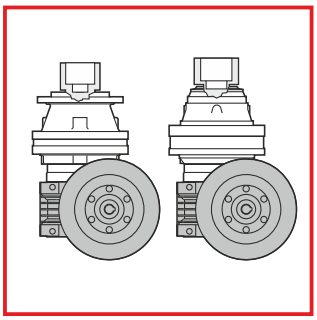
C37

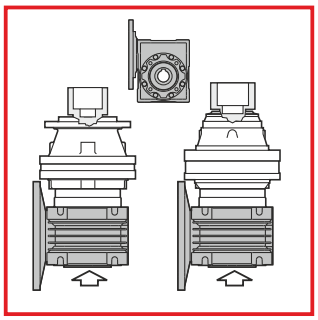
C38

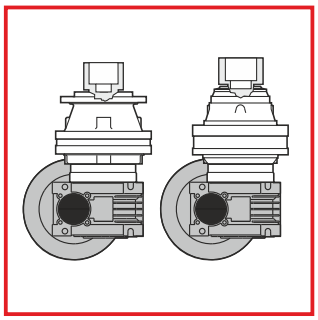
C39

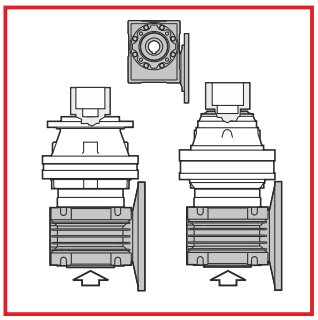
C40

CPC

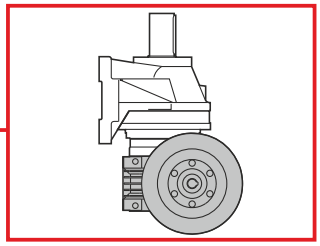
C65

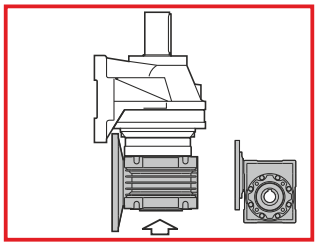
C66

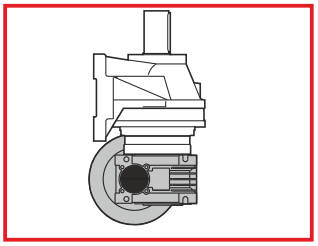
C67

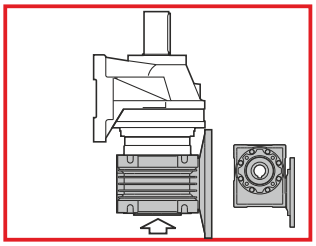
C68

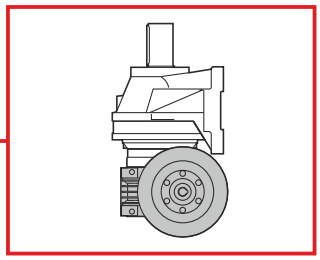
C69

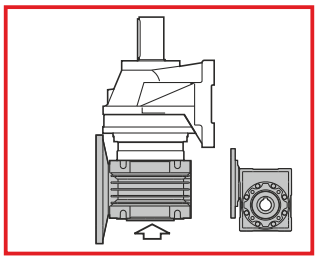
C70

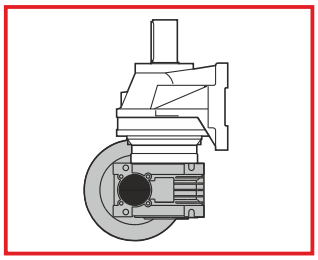
C71

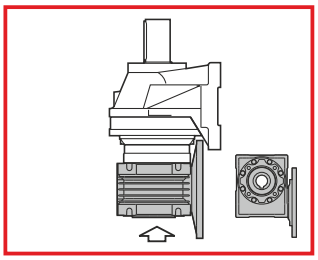
C72

TR GİRİŞ AKSESUARLARI	EN INPUT FITTINGS	DE ANTRIEBSBAUTEILE
IT ACCESSORI ENTRATA	FR ACCESSOIRES D'ENTREE	ES ACCESORIOS DE ENTRADA

Sonsuz dişlili redüktör adaptörleri Worm gearbox adaptors Anschluss für Schneckengetriebe Predisposizioni per riduttori a vite senza fine Adaptation pour reducteurs a vis sans fin Acoplamiento para reductores de tornillo sin fin	78 - 79
Modüler frenler Modular brakes Bremsmodule Freni modulari Freins modulaires Frenos modulares	86 - 87
Giriş milleri Input shafts Antriebswellen Alberi entrata Arbe d'entrées Ejes de entrada	88 - 91
Akuple girişler Direct inputs Standardantriebs Entrate dirette Entrée directes Entradas directas	92 - 98
Hidrolik motor kaplinleri Hydraulic motor couplings Anbauvorrichtung fuer hydraulikmotore Predisposizioni per motori idraulici Adaptations pour moteurs hydraulique Acoplamientos para motores hidráulicos	99 - 101
SAEJ 744C standartlarına göre hidromotor bağlantı flanşları Flanges for motors according to the SAEJ 744C STD Flansche für motore nach SAEJ 744C-NORM Flangiature per motori a norme SAEJ 744C Bridages pour moteurs aux normes SAEJ 744C Embridados para motores según normas SAEJ 744C	102
Elektrik motor adaptörleri Electric motor couplings Anbauvorrichtung für Elektromotore Predisposizioni per motori elettrici Adaptations pour moteurs electriques Acoplamientos para motores eléctricos	103

TR MODÜLER FRENLER

Planet dişli üniteleri, yağ banyolu disklere sahip, özellikle statik veya manuel fren için tasarlanmış olan hidrolik frenler ile donatılmıştır. Frenlerin yağlaması, planet dişli ünitelerinin yağlamasından ayrı tutulmuştur. Böylece, yağ giriş aşamasında sıvının aynı zamanda gövdenin yanında yer alan uygun delik kullanılarak frene de doldurulması gerekmektedir. ISO VG 32 yağı kullanmanızı tavsiye ederiz (bununla birlikte, hidrolik yağlar da kullanılabilmektedir).

EN MODULAR BRAKES

Planetary Drives planetary reduction units are equipped with hydraulic brakes with oil-bath disks, expressly designed for static or parking braking. The lubrication for the brakes is separated from the lubrication of the planetary gear units. Thus during the lubricant inlet phase, it is necessary to pour the fluid also into the brake through the proper hole mounted on its casing. We suggest to use lubricant ISO VG 32 (however, hydraulic lubricants can be used as well).

DE BREMSMODULE

Fuer die Planetary Drives - Planetengetriebe stehen hydraulische Federdruck-Lamellen bremsen zur Verfuegung. Diese sind ausschliesslich als statische Haltebremsen ausgelegt. Die Lamellen liegen im Oelb-ad, das vom Oelkreislauf des Getriebes getrennt ist. Deshalb ist beim Befuellen darauf zu achten, dass der Schmierstoff direkt in den Bremskoerper gegeben wird.
In der Regel koennen Hydraulikoele verwendet werden. Empfohlener Schmierstoff: ISO VG 32.

IT FRENI MODULARI

I freni in dotazione ai riduttori a epicicloidali Planetary Drives sono di tipo idraulico, con dischi a bagnod'olio, adatti esclusivamente alla fre natura statica, ovvero di parcheggio. I freni hanno la lubrificazione separata da quella del riduttore epicicloidale. In fase di immissione del lubrificante bisognerà quindi provvedere anche al riempimento del freno, mediante un apposito foro adduzione olio posto sullo stesso.Il lubrificante consigliato è un ISO VG 32. Normalmente possono andar bene gli olii idraulici.

FR FREINS MODULAIRES

Les freins dont sont équipés les réducteurs planétaires Planetary Drives sont du type hydraulique, avec disques en bain d'huile, appropriés exclusivement pour le freinage statique, c'est à dire de stationnement. Les freins ont une lubrification séparée de celle du reducteur planétaire. Lors de l'introduction du lubrifiant, il est donc nécessaire d'introduire de l'huile par le trou pratiqué sur le corps du frein. Il est conseillé d'utiliser du lubrifiant ISO VG 32 (on peut utiliser normalement des huiles hydrauliques).

ES FRENOS MODULARES

Los reductores epicicloidales Planetary Drives se suministran con frenos de tipo hidráulico, con discos sumergidos en baño de aceite, aptos exclusivamente para el frenado estático o sea, para el estacionamiento.
Los frenos tienen la lubricación separada del reductor epicicloidal. Por tanto, durante la introducción del lubricante también habrá que efectuar el llenado del freno, mediante el respectivo agujero de aducción de aceite que está en su carcasa. Se aconseja uitizar el lubricante ISO VG 32 (también sepueden utilizar los aceites hidráulicos).

	RA
PL 1000	1-2-3-4
PL 1600	1-2-3-4
PL 2500	1-2-3-4
PL 5000	1-2-3-4
PL 7000	2-3-4
PL 10000	2-3-4
PL 16000	2-3-4
PL 18000	3-4
PL 25000	3-4
PL 30000	3-4
PL 35000	3-4
PL 50000	3-4
PL 65000	4
PL 90000	4
PL 130000	4-5
PL 170000	4-5
PL 220000	4-5
PL 250000	5
PL 300000	5
PL 380000	5
PL 460000	5
PL 550000	5
PL 620000	—

	RA
PLB 1000	2-3-4
PLB 1600	2-3-4
PLB 2500	2-3-4
PLB 5000	2-3-4
PLB 7000	2-3-4
PLB 10000	2-3-4
PLB 16000	2-3-4
PLB 18000	3-4
PLB 25000	3-4
PLB 30000	3-4
PLB 35000	3-4
PLB 50000	3-4
PLB 65000	4
PLB 90000	4
PLB 130000	4-5
PLB 170000	5
PLB 220000	5
PLB 250000	5
PLB 300000	5
PLB 380000	—
PLB 460000	—
PLB 550000	—
PLB 620000	—

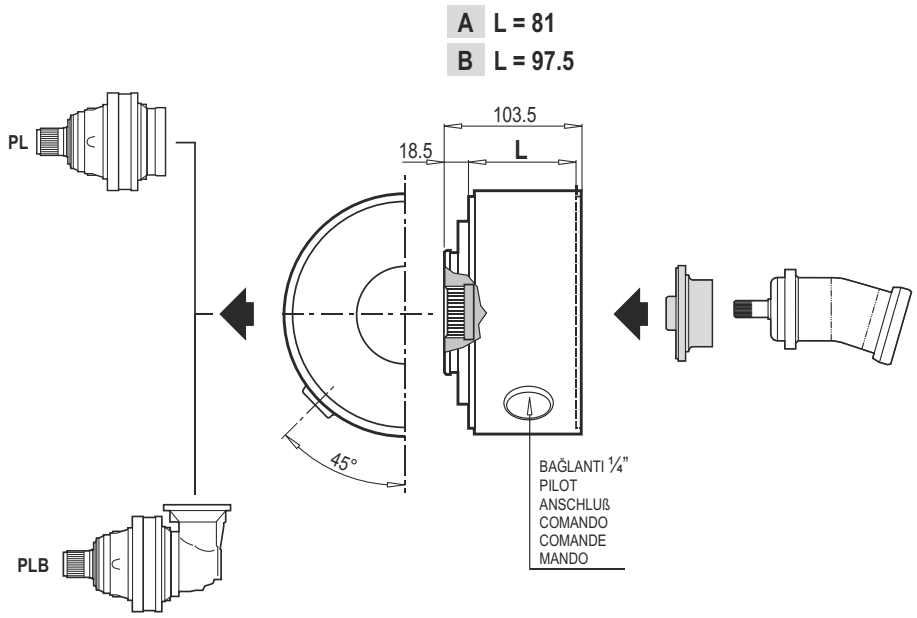

RA							
	Cfs_{min} [Nm]	Pa_{min} [bar]	Kod / Code Bestell Nr. / Codice Code / Código	P_{max} [bar]	OIL [lt] V1	OIL [lt] B5	Kg
RA 10	90	17	6074.000.500	300	0.4	0.2	14
RA 16	140	23	6074.001.500				
RA 25	220	19	6074.002.500				
RA 35	330	23	6074.003.500				
RA 45	430	33	6074.004.500				
RA 55	550	39	6074.006.500				

Not: 1-2-3-4-5 rakamları planet dişli ünitesinin kademe sayısını göstermektedir.

N.B: i numeri 1-2-3-4-5 indicano il numero di stadi dei riduttori.

N.B: Numbers 1-2-3-4-5 refer to the number of stages of the planetary gear unit.

N.B: Les numéros 1-2-3-4-5 indiquent le nombre d'étages des réducteurs.

N.B. Die Ziffern 1-2-3-4-5 geben die Anzahl der Getriebestufen an.

Nota: Los números 1-2-3-4-5 indican el número de etapas de los reductores.

TR MODÜLER FRENLER	EN MODULAR BRAKES	DE BREMSMODULE
IT FRENI MODULARI	FR FREINS MODULAIRES	ES FRENOS MODULARES

	RB
PL 1000	—
PL 1600	—
PL 2500	1
PL 5000	1
PL 7000	1-2
PL 10000	1-2
PL 16000	1-2
PL 18000	2-3
PL 25000	2-3
PL 30000	2-3
PL 35000	2-3
PL 50000	2-3
PL 65000	3-4
PL 90000	3-4
PL 130000	3-4
PL 170000	3-4
PL 220000	3-4
PL 250000	4-5
PL 300000	4-5
PL 380000	4-5
PL 460000	4-5
PL 550000	4-5
PL 620000	5

	RB
PLB 1000	—
PLB 1600	—
PLB 2500	—
PLB 5000	—
PLB 7000	—
PLB 10000	—
PLB 16000	—
PLB 18000	2
PLB 25000	2
PLB 30000	—
PLB 35000	2-3
PLB 50000	2
PLB 65000	3
PLB 90000	3
PLB 130000	3
PLB 170000	3-4
PLB 220000	3-4
PLB 250000	4
PLB 300000	4
PLB 380000	4-5
PLB 460000	5
PLB 550000	5
PLB 620000	5

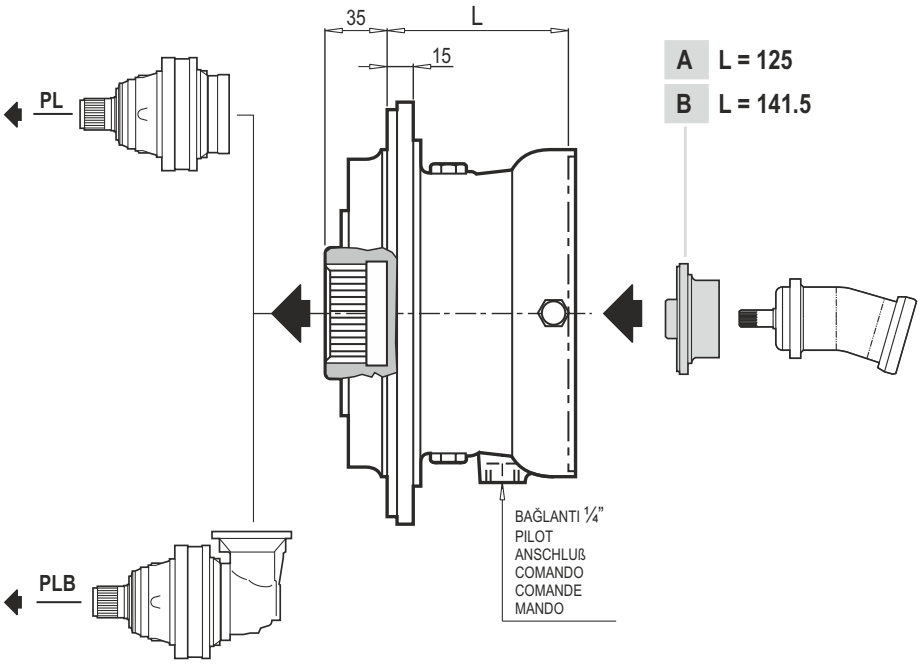

RB							
	Cfs_{min} [Nm]	Pa_{min} [bar]	Kod / Code Bestell Nr. / Codice Code / Código	P_{max} [bar]	OIL [lt] V1	OIL [lt] B5	Kg
RB 25	250	22	5074.300.500	300	0.6	0.3	12
RB 40	400	35	5074.301.500				
RB 63	650	50	5074.302.500				
RB 80	800	38	5074.303.500				
RB 100	1000	45	5074.304.500				
RB 125	1250	45	5074.305.500				
RB 160	1500	45	5074.306.500				
RB 180	1700	50	5074.307.500				

Not: 1-2-3-4-5 rakamları planet dişli ünitesinin kademe sayısını göstermektedir.

N.B: i numeri 1-2-3-4-5 indicano il numero di stadi dei riduttori.

N.B: Numbers 1-2-3-4-5 refer to the number of stages of the planetary gear unit.

N.B: Les numéros 1-2-3-4-5 indiquent le nombre d'étages des réducteurs.

N.B. Die Ziffern 1-2-3-4-5 geben die Anzahl der Getriebestufen an.

Nota: Los números 1-2-3-4-5 indican el número de etapas de los reductores.

PGR DRIVE TECHNOLOGIES

TR	GİRİŞ MİLLERİ	EN	INPUT SHAFTS	DE	ANTRIEBSWELLEN
IT	ALBERI ENTRATA	FR	ARBRES D'ENTREE	ES	EJES DE ENTRADA

EL C 28

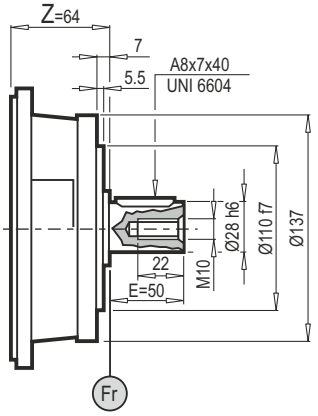

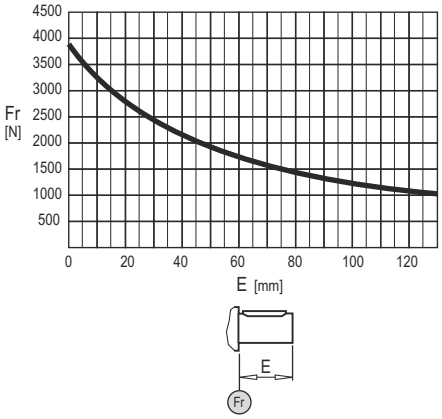

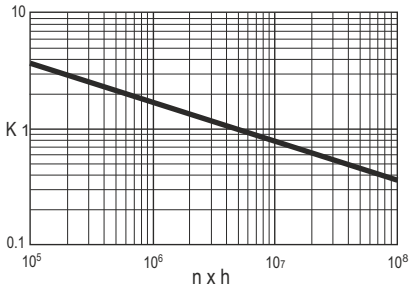

Ağırlık Weight Gewicht Peso Poids Peso	**5.5 kg**

Kod / Code
Bestell Nr. / Codice
Code / Código
8074.517.400

EL C 42

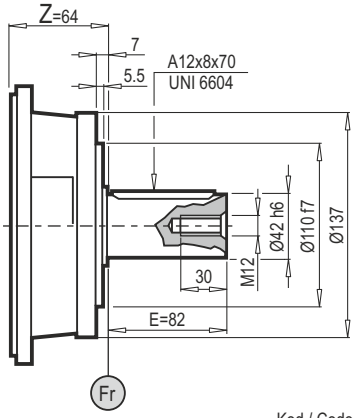

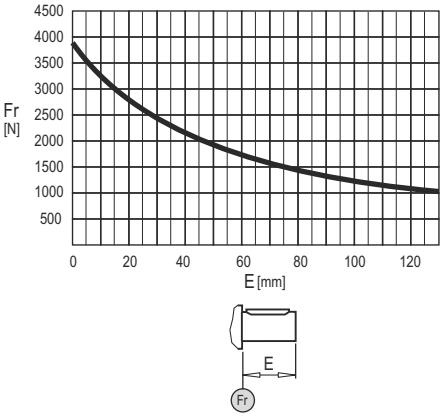

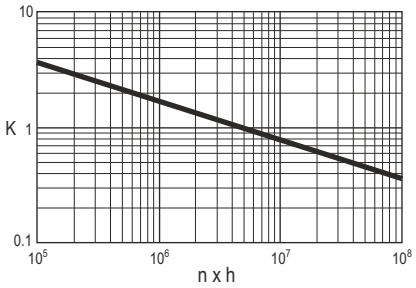

Ağırlık Weight Gewicht Peso Poids Peso	**6.0 kg**

Kod / Code
Bestell Nr. / Codice
Code / Código
8074.507.400

EML 42

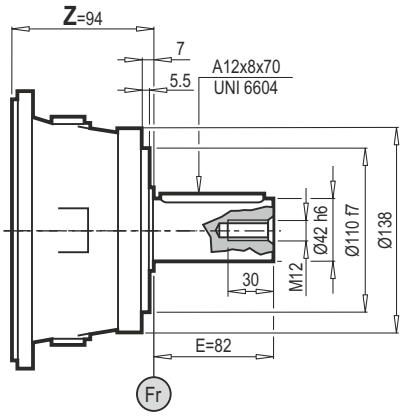

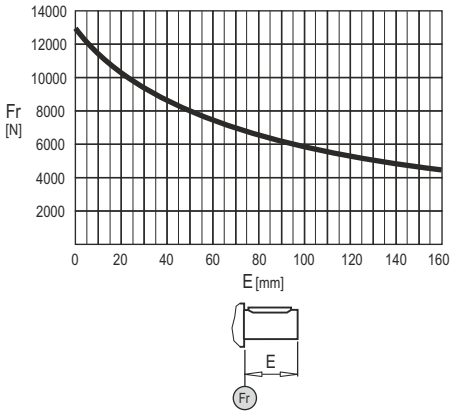

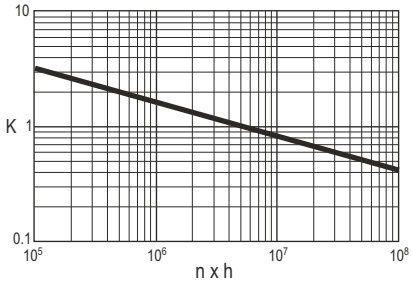

Ağırlık Weight Gewicht Peso Poids Peso	**9.0 kg**

Kod / Code
Bestell Nr. / Codice
Code / Código
8074.505.400

Z ölçüleri sayfa 91'deki tablodan doğrulanması gerekmektedir.
Z dimensions have to be verified in the table on page 91.
Das Mass Z wird in der entsprechenden Tabelle auf der Seite 91 festgestellt.
Le dimensioni Z riportate vanno verificate con la tabella a pag. 91.
Les dimensions de Z sont à verifier dans le tableau à page 91.
Las dimensiones Z indicadas tienen que verificarse con la tabla de la Pág. 91.

TR	GİRİŞ MİLLERİ	EN	INPUT SHAFTS	DE	ANTRIEBSWELLEN
IT	ALBERI ENTRATA	FR	ARBRES D'ENTREE	ES	EJES DE ENTRADA

EML 1"3/8 Z6

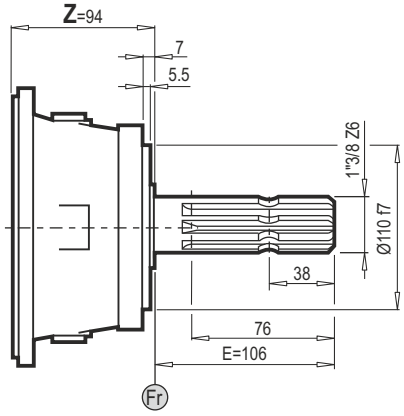

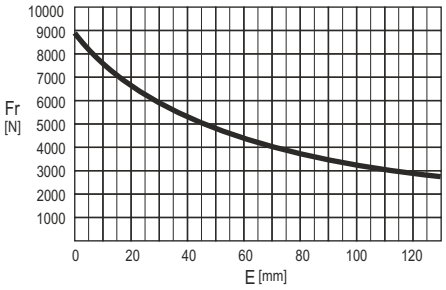

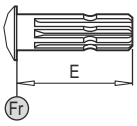

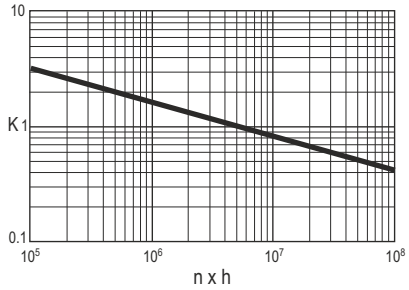

Ağırlık Weight Gewicht Peso Poids Peso	**9.0 kg**

Kod / Code
Bestell Nr. / Codice
Code / Código
8074.508.400

EM 65

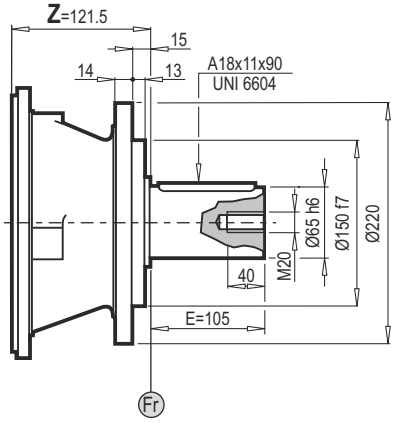

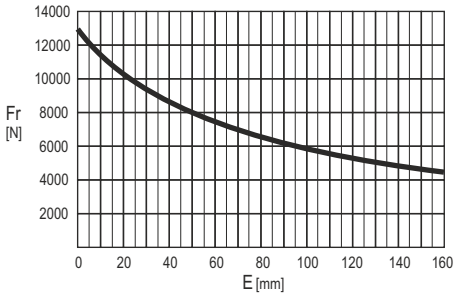

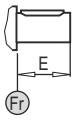

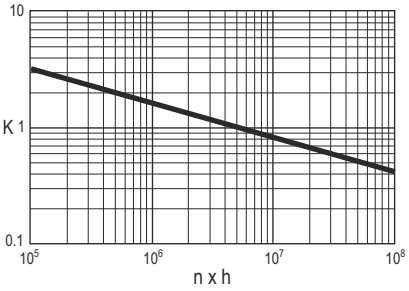

Ağırlık Weight Gewicht Peso Poids Peso	**17 kg**

Kod / Code
Bestell Nr. / Codice
Code / Código
2174.501.400 (size < 10000)
4174.501.400 (size > 10000)

EM 1"3/8 Z6

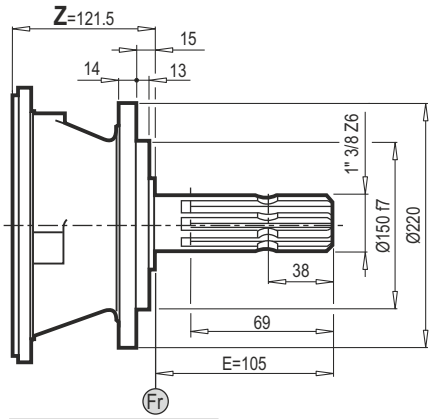

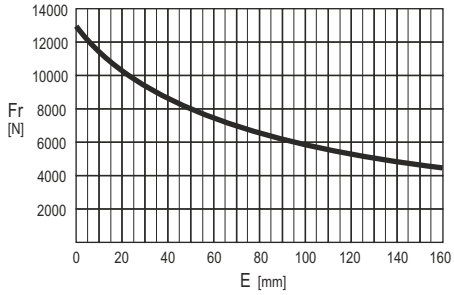

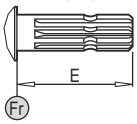

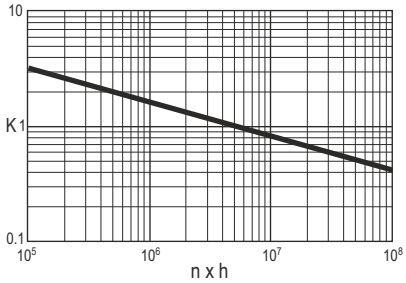

Ağırlık Weight Gewicht Peso Poids Peso	**17 kg**

Kod / Code
Bestell Nr. / Codice
Code / Código
2174.505.400 (size < 10000)
4174.504.400 (size > 10000)

Z ölçüleri sayfa 91'deki tablodan doğrulanması gerekmektedir.
Z dimensions have to be verified in the table on page 91.
Das Mass Z wird in der entsprechenden Tabelle auf der Seite 91 festgestellt.
Le dimensioni Z riportate vanno verificate con la tabella a pag. 91.
Les dimensions de Z sont à verifier dans le tableau à page 91.
Las dimensiones Z indicadas tienen que verificarse con la tabla de la Pág. 91.

TR GİRİŞ MİLLERİ | EN INPUT SHAFTS | DE ANTRIEBSWELLEN

IT ALBERI ENTRATA | FR ARBRES D'ENTREE | ES EJES DE ENTRADA

EP 65

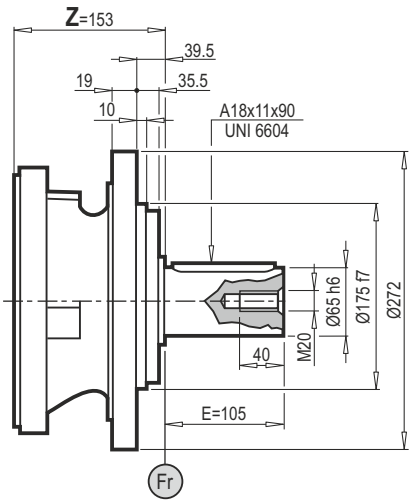

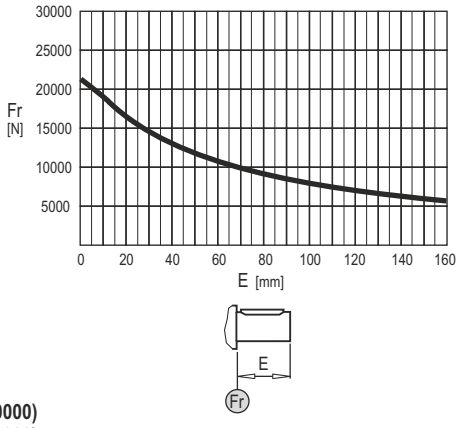

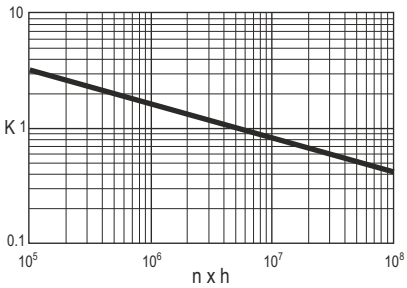

Ağırlık Weight Gewicht Peso Poids Peso	**26 kg**

Kod / Code
Bestell Nr. / Codice
Code / Código
Nr. **2174.503.400 (size < 10000)**
Nr. **4174.503.400 (size > 10000)**

ET 90

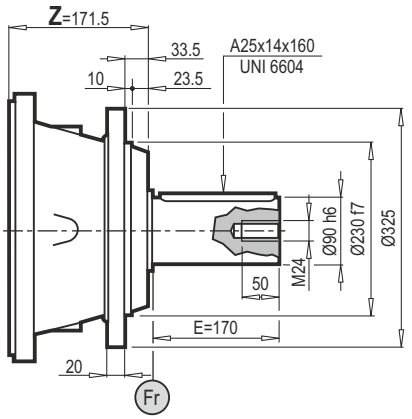

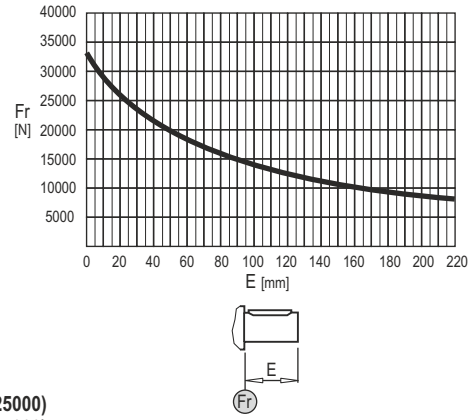

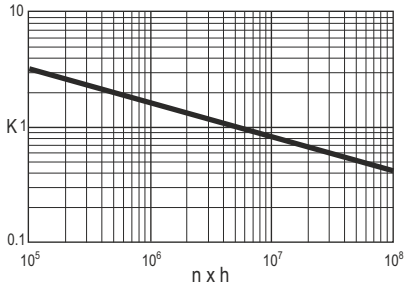

Ağırlık Weight Gewicht Peso Poids Peso	**48 kg**

Kod / Code
Bestell Nr. / Codice
Code / Código
Nr. **6174.500.400 (size < 25000)**
Nr. **7174.500.400 (size > 25000)**

Z ölçüleri sayfa 91'deki tablodan doğrulanması gerekmektedir.
Z dimensions have to be verified in the table on page 91.
Das Mass Z wird in der entsprechenden Tabelle auf der Seite 91 festgestellt.
Le dimensioni Z riportate vanno verificate con la tabella a pag. 91.
Les dimensions de Z sont à verifier dans le tableau à page 91.
Las dimensiones Z indicadas tienen que verificarse con la tabla de la Pág. 91.

TR GİRİŞ MİLLERİ

EN INPUT SHAFTS

DE ANTRIEBSWELLEN

IT ALBERI ENTRATA

FR ARBRES D'ENTREE

ES EJES DE ENTRADA

	EL - EML	EM - EP		ET		
	Z	Z	Z+13.5	Z	Z+15	Z+31
PL 1000	1-2-3-4	—	—	—	—	—
PL 1600	1-2-3-4	—	—	—	—	—
PL 2500	1-2-3-4	—	1	—	—	—
PL 5000	1-2-3-4	—	1	—	—	—
PL 7000	2-3-4	1	2	—	—	—
PL 10000	2-3-4	1	2	—	—	—
PL 16000	2-3-4	1	2	—	—	—
PL 18000	3-4	2	3	—	—	—
PL 25000	3-4	2	3	—	1	—
PL 30000	3-4	2	3	—	—	2
PL 35000	3-4	2	3	—	—	2
PL 50000	3-4	2	3	1	—	2
PL 65000	4	3	4	—	2	—
PL 90000	4	3	4	—	2	—
PL 130000	4-5	3	4	—	2	3
PL 170000	4-5	3	4	2	—	3
PL 220000	4-5	3	4	2	—	3
PL 250000	5	4	5	—	3	—
PL 300000	5	4	5	—	3	—
PL 380000	5	4	5	—	3	4
PL 460000	5	4	5	—	3	4
PL 550000	5	4	5	3	—	4
PL 620000	5	4	5	3	—	4

	EL - EML	EM - EP		ET
	Z	Z	Z+16	—
PLB 1000	2-3-4	—	—	—
PLB 1600	2-3-4	—	—	—
PLB 2500	2-3-4	—	2-3-4	—
PLB 5000	2-3-4	—	2-3-4	—
PLB 7000	2-3-4	—	2-3-4	—
PLB 10000	2-3-4	—	2-3-4	—
PLB 16000	3-4	2	3-4	—
PLB 18000	3-4	—	3-4	—
PLB 25000	3-4	2	3-4	—
PLB 30000	4	—	3-4	—
PLB 35000	4	2-3	4	—
PLB 50000	4	—	2-3-4	—
PLB 65000	4	2	3-4	—
PLB 90000	4	2	3-4	—
PLB 130000	4	3	4	—
PLB 170000	5	3-4	5	—
PLB 220000	5	3-4	5	—
PLB 250000	5	4	5	—
PLB 300000	5	4	5	—
PLB 380000	—	4-5	—	—
PLB 460000	—	5	—	—
PLB 550000	—	5	—	—
PLB 620000	—	5	—	—

Not: 1-2-3-4-5 rakamları planet dişli ünitesinin kademe sayısını göstermektedir.

N.B: i numeri 1-2-3-4-5 indicano il numero di stadi dei riduttori.

N.B: Numbers 1-2-3-4-5 refer to the number of stages of the planetary gear unit.

N.B: Les numéros 1-2-3-4-5 indiquent le nombre d'étages des réducteurs.

N.B. Die Ziffern 1-2-3-4-5 geben die Anzahl der Getriebestufen an.

Nota: Los números 1-2-3-4-5 indican el número de etapas de los reductores.

PGR® DRIVE TECHNOLOGIES

TR FRENSİZ MOTOR ADAPTÖRÜ

Aşağıdaki tablolar PL planet dişli ünitelerinde akuple girişli ED uygulamasını göstermektedir.

EN DIRECT INPUT MOTOR ADAPTOR WITHOUT BRAKE

The following tables show how to apply direct inputs ED on PL planetary gear units.

DE STANDARDANTRIEB OHNE BREMSE MIT MOTORFLANSCH

Die nachfolgenden Tabellen zeigen die Anbaumöglichkeiten der ED Antriebe an die Getriebe der Serien PL.

IT ENTRATE DIRETTE SENZA FRENO CON ATTACCO MOTORE

La tabella seguente indica l'applicabilità delle entrate dirette ED sui riduttori PL.

FR ENTRÉE STANDARD SANS FREIN POUR ADAPTATION MOTEUR

Les tableaux ci-dessous montrent l'applicabilité des entrées standards ED aux réducteurs PL.

ES ENTRADAS DIRECTAS SIN FRENO PARA ACOPLAMIENTO MOTOR

Las siguientes tablas indican la factibilidad de aplicación de las entradas directas ED en los reductores PL.

	ED
PL 1000	1-2-3-4
PL 1600	1-2-3-4
PL 2500	2-3-4
PL 5000	2-3-4
PL 7000	3-4
PL 10000	3-4
PL 16000	3-4
PL 18000	4
PL 25000	4
PL 30000	4
PL 35000	4
PL 50000	4
PL 65000	—
PL 90000	—

	ED
PL 130000	5
PL 170000	5
PL 220000	5
PL 250000	—
PL 300000	—
PL 380000	—
PL 460000	—
PL 550000	—
PL 620000	—

Not: 1-2-3-4-5 rakamları planet dişli ünitesinin kademe sayısını göstermektedir.
N.B.: Numbers 1-2-3-4-5 refer to the number of stages of the planetary gear unit.
N.B.: Die Ziffern 1-2-3-4-5 geben die Anzahl der Getriebestufen an.
N.B.: i numeri 1-2-3-4-5 indicano il numero di stadi dei riduttori.
N.B.: Les numéros 1-2-3-4-5 indiquent le nombre d'étages des réducteurs.
Nota: Los números 1-2-3-4-5 indican el número de etapas de los reductores.

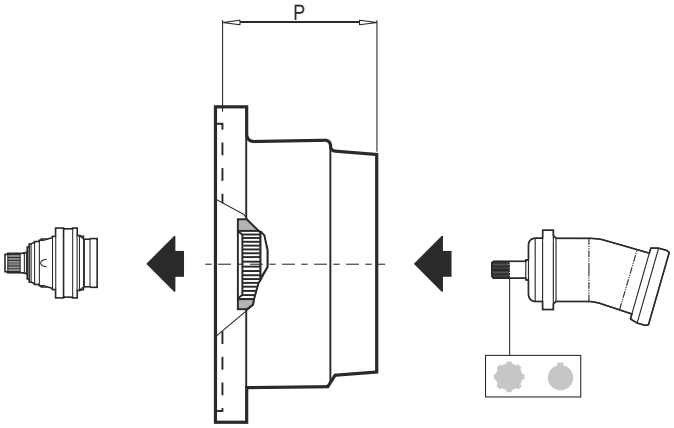

ED		
	P	Kod / Code Bestell Nr. / Codice Code / Código
ED SAE A 2-4 F 16/32 DP 9TH	62	8074.550.700
ED SAE A 2-4 F 16/32 DP 13TH	62	8074.551.700
ED SAE A 2-4 F 12/24 DP 14TH	78	8074.552.700
ED SAE A 2-4 F 12/24 DP 14TH	78	8074.553.700
ED SAE A 2-4 F 1" 6B	62	8074.554.700
ED SAE A 2-4 F 1" 6B	78	8074.555.700
ED SAE A 2-4 F 25x22 DIN 5482	62	8074.556.700

ED		
	P	Kod / Code Bestell Nr. / Codice Code / Código
ED SAE A 2-4 F D. 19.5 CH 4.8	62	8074.530.700
ED SAE A 2-4 F D. 25 CH 8	62	8074.531.700
ED SAE A 2-4 F D. 25.4 CH 6.35	78	8074.532.700
ED SAE A 2-4 F D. 25.4 CH 6.35	62	8074.533.700
ED SAE A 2-4 F D. 31.75 CH 7.96	62	8074.534.700
ED SAE A 2-4 F D. 31.75 CH 7.96	78	8074.535.700
ED SAE A 2-4 F D. 32 CH 10	62	8074.536.700

TR FRENLİ MOTOR ADAPTÖRÜ

Aşağıdaki tablolar PL, PLB planet dişli ünitelerinde akuple girişli EDF, EF uygulamalarını göstermektedir.

EN DIRECT INPUT MOTOR ADAPTOR WITH BRAKE

The following tables show how to apply direct inputs EDF, EF on PL, PLB planetary gear units.

DE MOTORFLANSCH MIT INTEGRIERTER BREMSE

Die nachfolgenden Tabellen zeigen die Anbaumöglichkeiten der EF - und EDF - Antriebe an die Getriebe der Serien PL und PLB.

IT ENTRATE DIRETTE CON FRENO E ATTACCO MOTORE

Le tabelle seguenti indicano l'applicabilità delle entrate dirette EDF, EF sui riduttori PL, PLB.

FR ENTRÉE DIRECTE AVEC FREIN POUR ADAPTATION MOTEUR

Le tabelle seguenti indicano l'applicabilità delle entrate dirette EDF, EF sui riduttori PL, PLB.

ES ENTRADAS DIRECTAS CON FRENO PARA ACOPLAMIENTO MOTOR

Las siguientes tablas indican la factibilidad de aplicación de las entradas directas EDF, EF en los reductores PL, PLB.

	EDF	ED
PL 1000	1-2-3-4	—
PL 1600	1-2-3-4	—
PL 2500	2-3-4	1
PL 5000	2-3-4	1
PL 7000	3-4	2
PL 10000	3-4	2
PL 16000	3-4	2
PL 18000	4	3
PL 25000	4	3
PL 30000	4	3
PL 35000	4	3
PL 50000	4	3
PL 65000	—	4
PL 90000	—	4
PL 130000	5	4
PL 170000	5	4
PL 220000	5	4
PL 250000	—	5
PL 300000	—	5
PL 380000	—	5
PL 460000	—	5
PL 550000	—	5
PL 620000	—	—

	EF
PLB 1000	2-3-4
PLB 1600	2-3-4
PLB 2500	2-3-4
PLB 5000	2-3-4
PLB 7000	2-3-4
PLB 10000	2-3-4
PLB 16000	3-4
PLB 18000	3-4
PLB 25000	3-4
PLB 30000	3-4
PLB 35000	4
PLB 50000	4
PLB 65000	4
PLB 90000	4
PLB 130000	4-5
PLB 170000	5
PLB 220000	5
PLB 250000	5
PLB 300000	5
PLB 380000	—
PLB 460000	—
PLB 550000	—
PLB 620000	—

Not: 1-2-3-4-5 rakamları planet dişli ünitesinin kademe sayısını göstermektedir.
N.B.: Numbers 1-2-3-4-5 refer to the number of stages of the planetary gear unit.
N.B.: Die Ziffern 1-2-3-4-5 geben die Anzahl der Getriebestufen an.
N.B.: i numeri 1-2-3-4-5 indicano il numero di stadi dei riduttori.
N.B.: Les numéros 1-2-3-4-5 indiquent le nombre d'étages des réducteurs.
Nota: Los números 1-2-3-4-5 indican el número de etapas de los reductores.

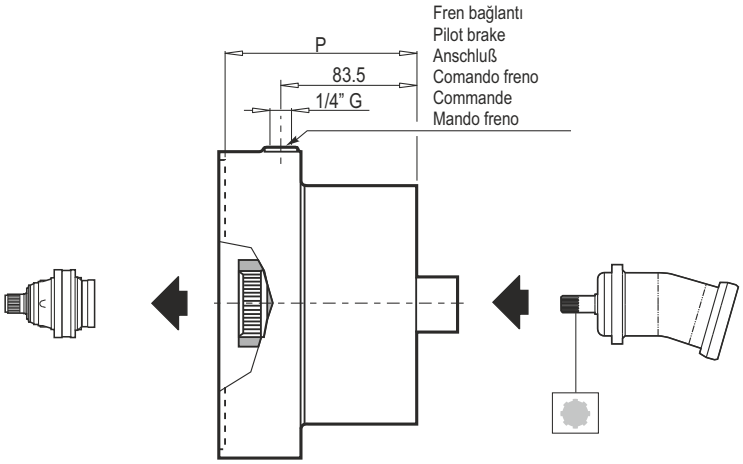

EDF								
	Cfs_{min} [Nm]	Pa_{min} [bar]	P	Kod / Code Bestell Nr. / Codice Code / Código	P_{max} [bar]	OIL [lt] V1	OIL [lt] B5	Kg
EDF 10 per/for GLC-OMSS-HPRC	110	13	118	8074.100.710	300	0.3	0.15	20
EDF 16 per/for GLC-OMSS-HPRC	160	17	118	8074.101.710				
EDF 20 per/for GLC-OMSS-HPRC	220	23	118	8074.102.710				
EDF 25 per/for GLC-OMSS-HPRC	260	17	118	8074.103.710				
EDF 35 per/for GLC-OMSS-HPRC	360	17	118	8074.104.710				
EDF 45 per/for GLC-OMSS-HPRC	470	23	118	8074.105.710				
EDF 55 per/for GLC-OMSS-HPRC	600	27	118	8074.106.710				

EDF								
	Cfs_{min} [Nm]	Pa_{min} [bar]	P	Kod / Code Bestell Nr. / Codice Code / Código	P_{max} [bar]	OIL [lt] V1	OIL [lt] B5	Kg
EDF 10 per/for EATON 2000 BEARINGLESS	110	13	118	İstenirse On request Auf Anfrage A richiesta Sur demande Bajo demanda	300	0.3	0.15	20
EDF 16 per/for EATON 2000 BEARINGLESS	160	17	118					
EDF 20 per/for EATON 2000 BEARINGLESS	220	23	118					
EDF 25 per/for EATON 2000 BEARINGLESS	260	17	118					
EDF 35 per/for EATON 2000 BEARINGLESS	360	17	118					
EDF 45 per/for EATON 2000 BEARINGLESS	470	23	118					
EDF 55 per/for EATON 2000 BEARINGLESS	600	27	118					

TR FRENLİ MOTOR ADAPTÖRÜ

Aşağıdaki tablolar PL, PLB planet dişli ünitelerinde akuple girişli EDF, EF uygulamalarını göstermektedir.

EN DIRECT INPUT MOTOR ADAPTOR WITH BRAKE

The following tables show how to apply direct inputs EDF, EF on PL, PLB planetary gear units.

DE MOTORFLANSCH MIT INTEGRIERTER BREMSE

Die nachfolgenden Tabellen zeigen die Anbaumöglichkeiten der EF - und EDF - Antriebe an die Getriebe der Serien PL und PLB.

IT ENTRATE DIRETTE CON FRENO E ATTACCO MOTORE

Le tabelle seguenti indicano l'applicabilità delle entrate dirette EDF, EF sui riduttori PL, PLB.

FR ENTRÉE DIRECTE AVEC FREIN POUR ADAPTATION MOTEUR

Le tabelle seguenti indicano l'applicabilità delle entrate dirette EDF, EF sui riduttori PL, PLB.

ES ENTRADAS DIRECTAS CON FRENO PARA ACOPLAMIENTO MOTOR

Las siguientes tablas indican la factibilidad de aplicación de las entradas directas EDF, EF en los reductores PL, PLB.

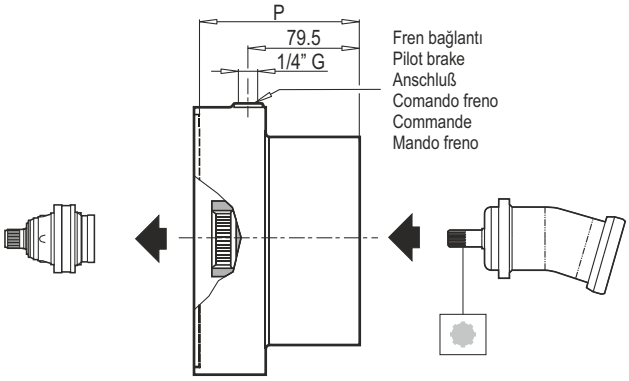

EDF

	Cfs_{min} [Nm]	Pa_{min} [bar]	P	Kod / Code Bestell Nr. / Codice Code / Código	P_{max} [bar]	OIL [lt] V1	OIL [lt] B5	Kg
EDF 10 SAE A 2-4 F 16/32 DP 9TH	110	13	114	İstenirse On request Auf Anfrage A richiesta Sur demande Bajo demanda	300	0.3	0.15	20
EDF 16 SAE A 2-4 F 16/32 DP 9TH	160	17	114					
EDF 20 SAE A 2-4 F 16/32 DP 9TH	220	23	114					
EDF 25 SAE A 2-4 F 16/32 DP 9TH	260	17	114					
EDF 25 SAE A 2-4 F 16/32 DP 9TH	360	17	114					
EDF 45 SAE A 2-4 F 16/32 DP 9TH	470	23	114					
EDF 55 SAE A 2-4 F 16/32 DP 9TH	600	27	114					

EDF

	Cfs_{min} [Nm]	Pa_{min} [bar]	P	Kod / Code Bestell Nr. / Codice Code / Código	P_{max} [bar]	OIL [lt] V1	OIL [lt] B5	Kg
EDF 10 SAE A 2-4 F 16/32 DP 13TH	110	13	114	İstenirse On request Auf Anfrage A richiesta Sur demande Bajo demanda	300	0.3	0.15	20
EDF 16 SAE A 2-4 F 16/32 DP 13TH	160	17	114					
EDF 20 SAE A 2-4 F 16/32 DP 13TH	220	23	114					
EDF 25 SAE A 2-4 F 16/32 DP 13TH	260	17	114					
EDF 35 SAE A 2-4 F 16/32 DP 13TH	360	17	114					
EDF 45 SAE A 2-4 F 16/32 DP 13TH	470	23	114					
EDF 55 SAE A 2-4 F 16/32 DP 13TH	600	27	114					

EDF

	Cfs_{min} [Nm]	Pa_{min} [bar]	P	Kod / Code Bestell Nr. / Codice Code / Código	P_{max} [bar]	OIL [lt] V1	OIL [lt] B5	Kg
EDF 10 SAE A 2-4 F 12/24 DP 14TH	110	13	114	İstenirse On request Auf Anfrage A richiesta Sur demande Bajo demanda	300	0.3	0.15	20
EDF 16 SAE A 2-4 F 12/24 DP 14TH	160	17	114					
EDF 20 SAE A 2-4 F 12/24 DP 14TH	220	23	114					
EDF 25 SAE A 2-4 F 12/24 DP 14TH	260	17	114					
EDF 35 SAE A 2-4 F 12/24 DP 14TH	360	17	114					
EDF 45 SAE A 2-4 F 12/24 DP 14TH	470	23	114					
EDF 55 SAE A 2-4 F 12/24 DP 14TH	600	27	114					

EDF

	Cfs_{min} [Nm]	Pa_{min} [bar]	P	Kod / Code Bestell Nr. / Codice Code / Código	P_{max} [bar]	OIL [lt] V1	OIL [lt] B5	Kg
EDF 10 SAE A 2-4 F 1" 6B	110	13	114	8074.080.710	300	0.3	0.15	20
EDF 16 SAE A 2-4 F 1" 6B	160	17	114	8074.081.710				
EDF 20 SAE A 2-4 F 1" 6B	220	23	114	8074.082.710				
EDF 25 SAE A 2-4 F 1" 6B	260	17	114	8074.083.710				
EDF 35 SAE A 2-4 F 1" 6B	360	17	114	8074.084.710				
EDF 45 SAE A 2-4 F 1" 6B	470	23	114	8074.085.710				
EDF 55 SAE A 2-4 F 1" 6B	600	27	114	8074.086.710				

TR FRENLİ MOTOR ADAPTÖRÜ
EN DIRECT INPUT MOTOR ADAPTOR WITH BRAKE
DE MOTORFLANSCH MIT INTEGRIERTER BREMSE
IT ENTRATE DIRETTE CON FRENO E ATTACCO MOTORE
FR ENTRÉE DIRECTE AVEC FREIN POUR ADAPTATION MOTEUR
ES ENTRADAS DIRECTAS CON FRENO PARA ACOPLAMIENTO MOTOR

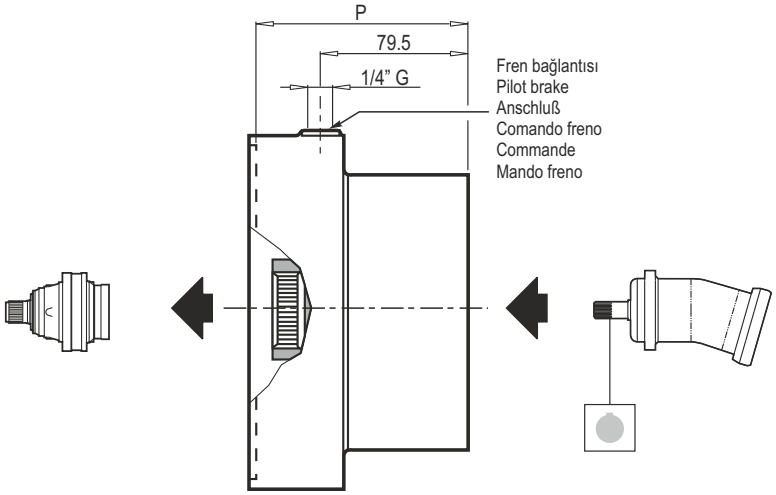

EDF								
	Cfs min [Nm]	Pa min [bar]	P	Kod / Code Bestell Nr. / Codice Code / Código	P max [bar]	OIL [lt] V1	OIL [lt] B5	Kg
EDF 10 SAE A 2-4 F D. 25 CH 8	110	13	114	8074.010.710	300	0.3	0.15	20
EDF 16 SAE A 2-4 F D. 25 CH 8	160	17	114	8074.011.710				
EDF 20 SAE A 2-4 F D. 25 CH 8	220	23	114	8074.012.710				
EDF 25 SAE A 2-4 F D. 25 CH 8	260	17	114	8074.013.710				
EDF 35 SAE A 2-4 F D. 25 CH 8	360	17	114	8074.014.710				
EDF 45 SAE A 2-4 F D. 25 CH 8	470	23	114	8074.015.710				
EDF 55 SAE A 2-4 F D. 25 CH 8	600	27	114	8074.016.710				

EDF								
	Cfs min [Nm]	Pa min [bar]	P	Kod / Code Bestell Nr. / Codice Code / Código	P max [bar]	OIL [lt] V1	OIL [lt] B5	Kg
EDF 10 SAE A 2-4 F D. 25.4 CH 6.35	110	13	114	İstenirse On request Auf Anfrage A richiesta Sur demande Bajo demanda	300	0.3	0.15	20
EDF 16 SAE A 2-4 F D. 25.4 CH 6.35	160	17	114					
EDF 20 SAE A 2-4 F D. 25.4 CH 6.35	220	23	114					
EDF 25 SAE A 2-4 F D. 25.4 CH 6.35	260	17	114					
EDF 35 SAE A 2-4 F D. 25.4 CH 6.35	360	17	114					
EDF 45 SAE A 2-4 F D. 25.4 CH 6.35	470	23	114					
EDF 55 SAE A 2-4 F D. 25.4 CH 6.35	600	27	114					

EDF								
	Cfs min [Nm]	Pa min [bar]	P	Kod / Code Bestell Nr. / Codice Code / Código	P max [bar]	OIL [lt] V1	OIL [lt] B5	Kg
EDF 10 SAE A 2-4 F D. 31.75 CH 7.96	110	13	114	İstenirse On request Auf Anfrage A richiesta Sur demande Bajo demanda	300	0.3	0.15	20
EDF 16 SAE A 2-4 F D. 31.75 CH 7.96	160	17	114					
EDF 20 SAE A 2-4 F D. 31.75 CH 7.96	220	23	114					
EDF 25 SAE A 2-4 F D. 31.75 CH 7.96	260	17	114					
EDF 35 SAE A 2-4 F D. 31.75 CH 7.96	360	17	114					
EDF 45 SAE A 2-4 F D. 31.75 CH 7.96	470	23	114					
EDF 55 SAE A 2-4 F D. 31.75 CH 7.96	600	27	114					

EDF								
	Cfs min [Nm]	Pa min [bar]	P	Kod / Code Bestell Nr. / Codice Code / Código	P max [bar]	OIL [lt] V1	OIL [lt] B5	Kg
EDF 10 SAE A 2-4 F D. 32 CH 10	110	13	114	8074.040.710	300	0.3	0.15	20
EDF 16 SAE A 2-4 F D. 32 CH 10	160	17	114	8074.041.710				
EDF 20 SAE A 2-4 F D. 32 CH 10	220	23	114	8074.042.710				
EDF 25 SAE A 2-4 F D. 32 CH 10	260	17	114	8074.043.710				
EDF 35 SAE A 2-4 F D. 32 CH 10	360	17	114	8074.044.710				
EDF 45 SAE A 2-4 F D. 32 CH 10	470	23	114	8074.045.710				
EDF 55 SAE A 2-4 F D. 32 CH 10	600	27	114	8074.046.710				

PGR DRIVE TECHNOLOGIES

TR FRENLİ MOTOR ADAPTÖRÜ

EN DIRECT INPUT MOTOR ADAPTOR WITH BRAKE

DE MOTORFLANSCH MIT INTEGRIERTER BREMSE

IT ENTRATE DIRETTE CON FRENO E ATTACCO MOTORE

FR ENTRÉE DIRECTE AVEC FREIN POUR ADAPTATION MOTEUR

ES ENTRADAS DIRECTAS CON FRENO PARA ACOPLAMIENTO MOTOR

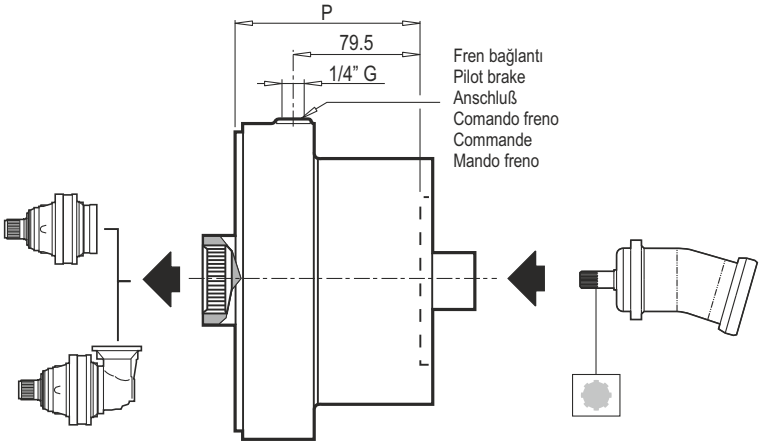

EF								
	Cfs_{min} [Nm]	Pa_{min} [bar]	P	Kod / Code Bestell Nr. / Codice Code / Código	P_{max} [bar]	OIL [lt] V1	OIL [lt] B5	Kg
EF 10 per/for GLC-OMSS-HPRC	110	13	118	2074.015.060	300	0.3	0.15	20
EF 16 per/for GLC-OMSS-HPRC	160	17	118	2074.015.061				
EF 20 per/for GLC-OMSS-HPRC	220	23	118	2074.015.062				
EF 25 per/for GLC-OMSS-HPRC	260	17	118	2074.015.063				
EF 35 per/for GLC-OMSS-HPRC	360	17	118	2074.015.064				
EF 45 per/for GLC-OMSS-HPRC	470	23	118	2074.015.065				
EF 55 per/for GLC-OMSS-HPRC	600	27	118	2074.015.066				

EF								
	Cfs_{min} [Nm]	Pa_{min} [bar]	P	Kod / Code Bestell Nr. / Codice Code / Código	P_{max} [bar]	OIL [lt] V1	OIL [lt] B5	Kg
EF 10 per/for EATON 2000 BEARINGLESS	110	13	118	İstenirse On request Auf Anfrage A richiesta Sur demande Bajo demanda	300	0.3	0.15	20
EF 16 per/for EATON 2000 BEARINGLESS	160	17	118					
EF 20 per/for EATON 2000 BEARINGLESS	220	23	118					
EF 25 per/for EATON 2000 BEARINGLESS	260	17	118					
EF 35 per/for EATON 2000 BEARINGLESS	360	17	118					
EF 45 per/for EATON 2000 BEARINGLESS	470	23	118					
EF 55 per/for EATON 2000 BEARINGLESS	600	27	118					

TR FRENLİ MOTOR ADAPTÖRÜ
EN DIRECT INPUT MOTOR ADAPTOR WITH BRAKE
DE MOTORFLANSCH MIT INTEGRIERTER BREMSE
IT ENTRATE DIRETTE CON FRENO E ATTACCO MOTORE
FR ENTRÉE DIRECTE AVEC FREIN POUR ADAPTATION MOTEUR
ES ENTRADAS DIRECTAS CON FRENO PARA ACOPLAMIENTO MOTOR

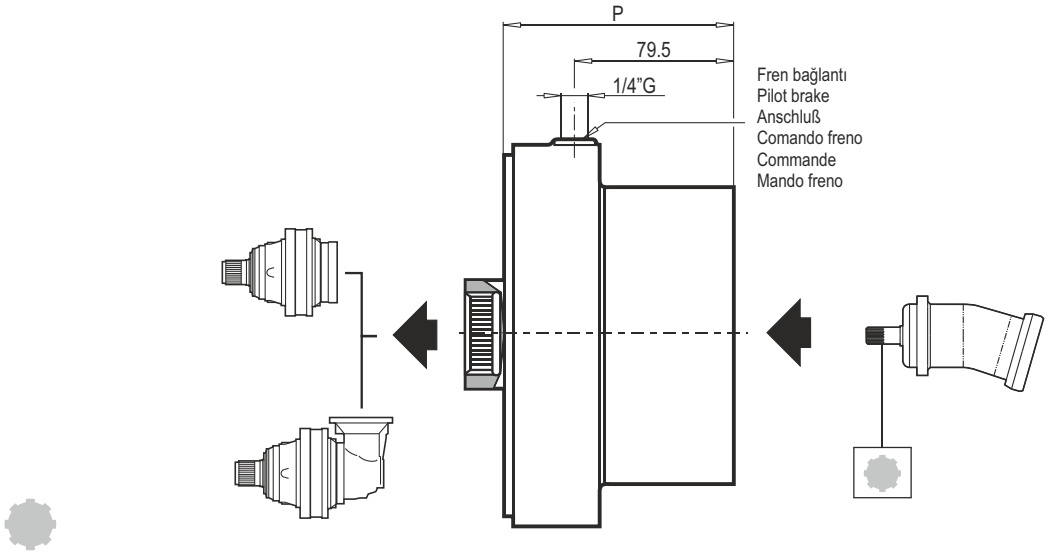

EF

	Cfs_{min} [Nm]	Pa_{min} [bar]	P	Kod / Code Bestell Nr. / Codice Code / Código	P_{max} [bar]	OIL [lt] V1	OIL [lt] B5	Kg
EF 10 SAE A 2-4 F 16/32 DP 9TH	110	13	114	İstenirse On request Auf Anfrage A richiesta Sur demande Bajo demanda	300	0.3	0.15	20
EF 16 SAE A 2-4 F 16/32 DP 9TH	160	17	114					
EF 20 SAE A 2-4 F 16/32 DP 9TH	220	23	114					
EF 25 SAE A 2-4 F 16/32 DP 9TH	260	17	114					
EF 35 SAE A 2-4 F 16/32 DP 9TH	360	17	114					
EF 45 SAE A 2-4 F 16/32 DP 9TH	470	23	114					
EF 55 SAE A 2-4 F 16/32 DP 9TH	600	27	114					

EF

	Cfs_{min} [Nm]	Pa_{min} [bar]	P	Kod / Code Bestell Nr. / Codice Code / Código	P_{max} [bar]	OIL [lt] V1	OIL [lt] B5	Kg
EF 10 SAE A 2-4 F 16/32 DP 13TH	110	13	114	İstenirse On request Auf Anfrage A richiesta Sur demande Bajo demanda	300	0.3	0.15	20
EF 16 SAE A 2-4 F 16/32 DP 13TH	160	17	114					
EF 20 SAE A 2-4 F 16/32 DP 13TH	220	23	114					
EF 25 SAE A 2-4 F 16/32 DP 13TH	260	17	114					
EF 35 SAE A 2-4 F 16/32 DP 13TH	360	17	114					
EF 45 SAE A 2-4 F 16/32 DP 13TH	470	23	114					
EF 55 SAE A 2-4 F 16/32 DP 13TH	600	27	114					

EF

	Cfs_{min} [Nm]	Pa_{min} [bar]	P	Kod / Code Bestell Nr. / Codice Code / Código	P_{max} [bar]	OIL [lt] V1	OIL [lt] B5	Kg
EF 10 SAE A 2-4 F 12/24 DP 14TH	110	13	114	İstenirse On request Auf Anfrage A richiesta Sur demande Bajo demanda	300	0.3	0.15	20
EF 16 SAE A 2-4 F 12/24 DP 14TH	160	17	114					
EF 20 SAE A 2-4 F 12/24 DP 14TH	220	23	114					
EF 25 SAE A 2-4 F 12/24 DP 14TH	260	17	114					
EF 35 SAE A 2-4 F 12/24 DP 14TH	360	17	114					
EF 45 SAE A 2-4 F 12/24 DP 14TH	470	23	114					
EF 55 SAE A 2-4 F 12/24 DP 14TH	600	27	114					

EF

	Cfs_{min} [Nm]	Pa_{min} [bar]	P	Kod / Code Bestell Nr. / Codice Code / Código	P_{max} [bar]	OIL [lt] V1	OIL [lt] B5	Kg
EF 10 SAE A 2-4 F 1" 6B	110	13	114	2074.015.040	300	0.3	0.15	20
EF 16 SAE A 2-4 F 1" 6B	160	17	114	2074.015.041				
EF 20 SAE A 2-4 F 1" 6B	220	23	114	2074.015.042				
EF 25 SAE A 2-4 F 1" 6B	260	17	114	2074.015.043				
EF 35 SAE A 2-4 F 1" 6B	360	17	114	2074.015.044				
EF 45 SAE A 2-4 F 1" 6B	470	23	114	2074.015.045				
EF 55 SAE A 2-4 F 1" 6B	600	27	114	2074.015.046				

TR FRENLİ MOTOR ADAPTÖRÜ

EN DIRECT INPUT MOTOR ADAPTOR WITH BRAKE

DE MOTORFLANSCH MIT INTEGRIERTER BREMSE

IT ENTRATE DIRETTE CON FRENO E ATTACCO MOTORE

FR ENTRÉE DIRECTE AVEC FREIN POUR ADAPTATION MOTEUR

ES ENTRADAS DIRECTAS CON FRENO PARA ACOPLAMIENTO MOTOR

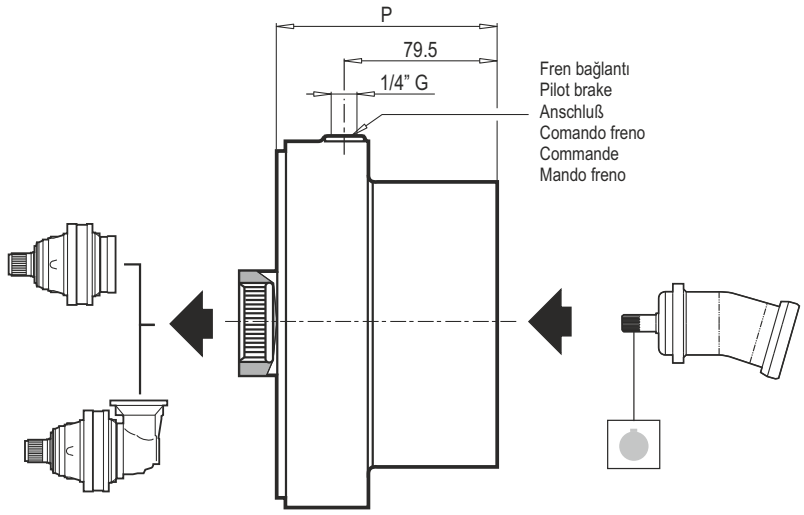

EF								
	Cfs_{min} [Nm]	Pa_{min} [bar]	P	Kod / Code Bestell Nr. / Codice Code / Código	P_{max} [bar]	OIL [lt] V1	OIL [lt] B5	Kg
EF 10 SAE A 2-4 F D. 25 CH 8	110	13	114	2074.014.010	300	0.3	0.15	20
EF 16 SAE A 2-4 F D. 25 CH 8	160	17	114	2074.014.011				
EF 20 SAE A 2-4 F D. 25 CH 8	220	23	114	2074.014.012				
EF 25 SAE A 2-4 F D. 25 CH 8	260	17	114	2074.014.013				
EF 35 SAE A 2-4 F D. 25 CH 8	360	17	114	2074.014.014				
EF 45 SAE A 2-4 F D. 25 CH 8	470	23	114	2074.014.015				
EF 55 SAE A 2-4 F D. 25 CH 8	600	27	114	2074.014.016				

EF								
	Cfs_{min} [Nm]	Pa_{min} [bar]	P	Kod / Code Bestell Nr. / Codice Code / Código	P_{max} [bar]	OIL [lt] V1	OIL [lt] B5	Kg
EF 10 SAE A 2-4 F D. 25.4 CH 6.35	110	13	114	İstenirse On request Auf Anfrage A richiesta Sur demande Bajo demanda	300	0.3	0.15	20
EF 16 SAE A 2-4 F D. 25.4 CH 6.35	160	17	114					
EF 20 SAE A 2-4 F D. 25.4 CH 6.35	220	23	114					
EF 25 SAE A 2-4 F D. 25.4 CH 6.35	260	17	114					
EF 35 SAE A 2-4 F D. 25.4 CH 6.35	360	17	114					
EF 45 SAE A 2-4 F D. 25.4 CH 6.35	470	23	114					
EF 55 SAE A 2-4 F D. 25.4 CH 6.35	600	27	114					

EF								
	Cfs_{min} [Nm]	Pa_{min} [bar]	P	Kod / Code Bestell Nr. / Codice Code / Código	P_{max} [bar]	OIL [lt] V1	OIL [lt] B5	Kg
EF 10 SAE A 2-4 F D. 31.75 CH 7.96	110	13	114	İstenirse On request Auf Anfrage A richiesta Sur demande Bajo demanda	300	0.3	0.15	20
EF 16 SAE A 2-4 F D. 31.75 CH 7.96	160	17	114					
EF 20 SAE A 2-4 F D. 31.75 CH 7.96	220	23	114					
EF 25 SAE A 2-4 F D. 31.75 CH 7.96	260	17	114					
EF 35 SAE A 2-4 F D. 31.75 CH 7.96	360	17	114					
EF 45 SAE A 2-4 F D. 31.75 CH 7.96	470	23	114					
EF 55 SAE A 2-4 F D. 31.75 CH 7.96	600	27	114					

EF								
	Cfs_{min} [Nm]	Pa_{min} [bar]	P	Kod / Code Bestell Nr. / Codice Code / Código	P_{max} [bar]	OIL [lt] V1	OIL [lt] B5	Kg
EF 10 SAE A 2-4 F D. 32 CH 10	110	13	114	2074.014.040	300	0.3	0.15	20
EF 16 SAE A 2-4 F D. 32 CH 10	160	17	114	2074.014.041				
EF 20 SAE A 2-4 F D. 32 CH 10	220	23	114	2074.014.042				
EF 25 SAE A 2-4 F D. 32 CH 10	260	17	114	2074.014.043				
EF 35 SAE A 2-4 F D. 32 CH 10	360	17	114	2074.014.044				
EF 45 SAE A 2-4 F D. 32 CH 10	470	23	114	2074.014.045				
EF 55 SAE A 2-4 F D. 32 CH 10	600	27	114	2074.014.046				

TR HİDROLİK MOTOR KAPLİNLERİ

EN HIDRAULIC MOTOR COUPLINGS

DE ANBAUVORRICHTUNG FUER HYDRAULIKMOTORE

IT PREDISPOSIZIONI PER MOTORI IDRAULICI

FR ADAPTATIONS POUR MOTEURS HYDRAULIQUE

ES ACOPLAMIENTOS PARA MOTORES HIDRÁULICOS

	A	B		C	D	
	Z	Z	Z+13.5	Z+15	Z	Z+31
PL 1000	1-2-3-4	—	—	—	—	—
PL 1600	1-2-3-4	—	—	—	—	—
PL 2500	1-2-3-4	—	1	—	—	—
PL 5000	1-2-3-4	—	1	—	—	—
PL 7000	2-3-4	1	2	—	—	—
PL 10000	2-3-4	1	2	—	—	—
PL 16000	2-3-4	1	2	—	—	—
PL 18000	3-4	2	3	—	—	—
PL 25000	3-4	2	3	1	—	—
PL 30000	3-4	2	3	—	—	2
PL 35000	3-4	2	3	—	—	2
PL 50000	3-4	2	3	—	1	2
PL 65000	4	3	4	2	—	—
PL 90000	4	3	4	2	—	—
PL 130000	4-5	3	4	2	—	3
PL 170000	4-5	3	4	—	2	3
PL 220000	4-5	3	4	—	2	3
PL 250000	5	4	4	3	—	—
PL 300000	5	4	5	3	—	—
PL 380000	5	4	5	3	—	4
PL 460000	5	4	5	—	3	4
PL 550000	5	4	5	—	3	4
PL 620000	—	—	5	4	—	—

	A	B		C	D
	Z	Z	Z+16		
PLB 1000	2-3-4	—	—	—	—
PLB 1600	2-3-4	—	—	—	—
PLB 2500	2-3-4	—	2-3-4	—	—
PLB 5000	2-3-4	—	2-3-4	—	—
PLB 7000	2-3-4	—	2-3-4	—	—
PLB 10000	2-3-4	—	2-3-4	—	—
PLB 16000	2-3-4	—	2-3-4	—	—
PLB 18000	3-4	2	3-4	—	—
PLB 25000	3-4	2	3-4	—	—
PLB 30000	3-4	—	3-4	—	—
PLB 35000	4	2-3	4	—	—
PLB 50000	4	—	2-3-4	—	—
PLB 65000	4	—	3-4	—	—
PLB 90000	4	—	3-4	—	—
PLB 130000	5	3-4	5	—	—
PLB 170000	5	3-4	5	—	—
PLB 220000	5	3-4	5	—	—
PLB 250000	5	4	5	—	—
PLB 300000	5	4	5	—	—
PLB 380000	—	4-5	—	—	—
PLB 460000	—	5	—	—	—
PLB 550000	—	5	—	—	—
PLB 620000	—	5	—	—	—

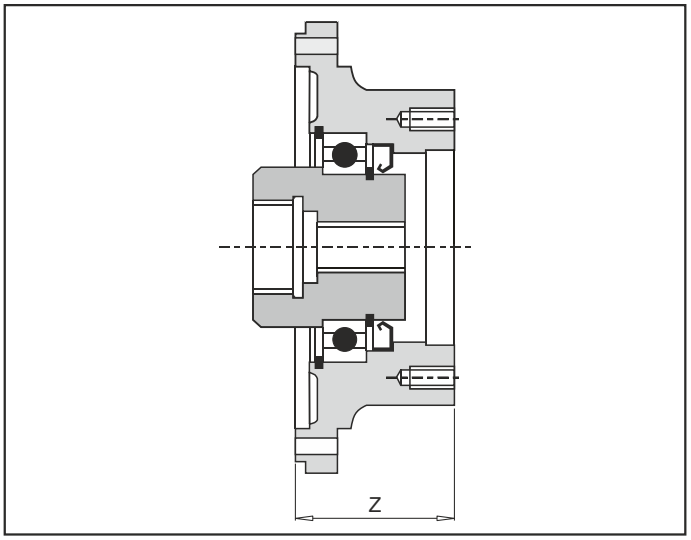

AXIAL PUMP

Motor tipi / Motor type Motortyp / Motore tipo Moteur type / Tipos de motor	Z	Kod / Code Bestell Nr. / Codice Code / Código	
M2-AMVCS 34-40-50-55 16/32 DP TH13	52	2074.013.001	A
M2-AMVCS 34-40-50-55 16/32 DP TH15	52	2074.013.003	
AMF 24-34-55 25x22 DIN5482	81	2074.013.070	
AMF 55 30x27 DIN5482	81	2074.013.060	

GEOLINK

Motor tipi / Motor type Motortyp / Motore tipo Moteur type / Tipos de motor	Z	Kod / Code Bestell Nr. / Codice Code / Código	
GHL/GFS/GFS Æ 25 CH8	61.5	2074.012.012	A
GHL/GFS/GFS Æ 25.4 CH6.35	61.5	2074.012.014	
GHL/GFS/GFS SAE 1"6B	61.5	2074.013.013	
GHL/GFS/GFS 25x22 DIN 5482 TH14	61.5	2074.013.011	
GLS Æ 32 CH10	77.5	2074.012.019	
GLC 12/24 DP TH12	38	2074.013.006	
GWS/GWP/GWR - **ED**	61	8074.502.700	
GWS/GWP/GWR - **EDF**	61	8074.505.700	

SAUER - DANFOSS

Motor tipi / Motor type Motortyp / Motore tipo Moteur type / Tipos de motor	Z	Kod / Code Bestell Nr. / Codice Code / Código	
OMM Ø16 CH5	70.5	2074.012.035	A
OMP - OMR Ø 25 CH8	61.5	2074.012.012	
OMP - OMR Ø 25.4 CH6.35	61.5	2074.012.014	
OMP - OMR SAE 1"6B	61.5	2074.013.013	
OMS Ø 32 CH10	77.5	2074.012.019	
OMS 12/24 DP TH14	77.5	2074.013.039	
OMSS 12/24 DP TH12	38	2074.013.006	
OMT Ø40 CH12	134	2074.012.031	
OMTS 12/24 DP TH16	78	2074.013.032	

Not: 1-2-3-4-5 rakamları planet dişli ünitesinin kademe sayısını göstermektedir.
N.B.: Numbers 1-2-3-4-5 refer to the number of stages of the planetary gear unit.
N.B.: Die ziffern 1-2-3-4-5 geben die Anzahl der Getriebestufen an.
N.B.: I numeri 1-2-3-4-5 indicano il numero di stadi dei riduttori.
N.B.: Les numéros 1-2-3-4-5 indiquent le nombre d'étages des réducteurs.
Nota: Los números 1-2-3-4-5 indican el número de etapas de los reductores.

Z ölçüleri bu sayfadaki tablolardan doğrulanmalıdır.
Z dimensions have to be verified in the tables of this page.
Das Mass Z wird in den entsprechenden Tabellen auf dieser Seite festgestellt.
Le dimensioni Z riportate vanno verificate con le tabelle di questa pagina.
Les dimensions de Z sont à verifier dans le tableaux de cette page.
Las dimensiones Z indicadas tienen que verificarse con las tablas de esta página.

TR HİDROLİK MOTOR KAPLİNLERİ | EN HIDRAULIC MOTOR COUPLINGS | DE ANBAUVORRICHTUNG FUER HYDRAULIKMOTORE

IT PREDISPOSIZIONI PER MOTORI IDRAULICI | FR ADAPTATIONS POUR MOTEURS HYDRAULIQUE | ES ACOPLAMIENTOS PARA MOTORES HIDRÁULICOS

DINAMIC OIL

Motor tipi / Motor type Motortyp / Motore tipo Moteur type / Tipos de motor	Z	Kod / Code Bestell Nr. / Codice Code / Código	
AH100/BH150/BH175/BH200 28x34 UNI 8953	55.5	2074.013.024	A
CH250/DH300/DH 350 32x38 UNI 8953	138	2074.053.003	B
PH250/PH300 32x38 UNI 8953	130	2074.053.016	
PH800 46x50 UNI 8953	118	2074.053.020	
PH800/PH1250/MH1000 46x50 UNI 8953	148	2074.073.001	C
PH800/PH1250/MH1000 46x50 UNI 8953	148	2074.083.001	D

EATON (CHAR-LYNN)

Motor tipi / Motor type Motortyp / Motore tipo Moteur type / Tipos de motor	Z	Kod / Code Bestell Nr. / Codice Code / Código	
A-H-S Ø 25 CH8	61.5	2074.012.012	A
A-H-S Ø 25.4 CH6.35	61.5	2074.012.014	
A-H-S SAE 1"6B	61.5	2074.013.013	
SERIE 2000			
BEARINGLESS 12/24 DP TH12	52	2074.013.033	
Ø 32 CH10	77	2074.012.019	
Ø 31.75 CH7.96	61.5	2074.012.017	
12/24 DP TH14	77.5	2074.013.038	
SERIE 4000			
BEARINGLESS 10/20 DP TH12	78	2074.013.045	
Ø 40 CH12	78	2074.012.027	
Ø 31.75 CH7.96	78	2074.012.020	
12/24 DP TH17	78	2074.013.016	
SERIE 6000			
Ø 40 CH12	78	2074.012.027	
12/24 DP TH14	77.5	2074.013.038	

EATON

Motor tipi / Motor type Motortyp / Motore tipo Moteur type / Tipos de motor	Z	Kod / Code Bestell Nr. / Codice Code / Código	
MF-MV25 16/32 DP TH13	52	2074.013.001	A
MF-MV25 16/32 DP TH15	52	2074.013.003	
MF-MV (33/39/46) 16/32 DP TH21	78	2074.013.017	
MF-MV54 16/32 DP TH23	78	2074.013.018	
MF-MV (33/39/46/54) 12/24 DP TH14	78	2074.013.015	
MF-MV25 Ø 22.22 CH6.25	52	2074.012.001	

HAGGLUNDS-ABEX DENISON

Motor tipi / Motor type Motortyp / Motore tipo Moteur type / Tipos de motor	Z	Kod / Code Bestell Nr. / Codice Code / Código	
M3D/M1D/M4E/12/24 DP TH14	78	2074.013.015	A
M3B/M3B1/TM3B 16/32 DP TH9	61.5	2074.013.010	
M1C/M4C/M4SC 16/32 DP TH13	52	2074.013.001	
M4C/M4SC Ø 22.22 CH4/75	67	2074.012.003	

REXROTH BOSCH GROUP (HYDROMATIK)

Motor tipi / Motor type Motortyp / Motore tipo Moteur type / Tipos de motor	Z	Kod / Code Bestell Nr. / Codice Code / Código	
A2FM (10/12/16) W25x1.25 DIN 5480 TH18	61.5	2074.013.009	A
A2FM (23/28/32) W25x1.25 DIN 5480 TH18	81	2074.013.062	
A2FM (23/28/32) W30x2 DIN 5480 TH14	81	2074.013.063	
A2FM (45/56) W30x2 DIN 5480 TH14	78	2074.013.019	
A2FM 45 W32x2 DIN 5480 TH14	78	2074.013.020	
A2FM (56/83) W35x2 DIN 5480 TH16	78	2074.013.021	
A2FM 80 W35x2 DIN 5480 TH16	81.5	2074.013.071	
A2FM (80/90) W40x2 DIN 5480 TH18	81.5	2074.013.064	
A2FM 107 W40x2 DIN 5480 TH18	88.5	2074.013.065	
A2FM 107 W40x2 DIN 5480 TH18	112	2074.053.007	B
A2FM (107/125) W45x2 DIN 5480 TH21	112	2074.053.006	
A2FM 160 W45x2 DIN 5480 TH21	112	2074.053.009	
A2FM (160/180) W50x2 DIN 5480 TH24	112	2074.053.008	
A2FM (200) W50x2 DIN 5480 TH24	112	2074.053.100	
A6VM55 W35x2 DIN 5480 TH16	78	2074.013.021	A
A6VM55 W30x2 DIN 5480 TH14	78	2074.013.019	
A6VM80 W35x2 DIN 5480 TH16	81.5	2074.013.071	
A6VM80 W40x2 DIN 5480 TH18	81.5	2074.013.064	
A6VM107 W40x2 DIN 5480 TH18	88.5	2074.013.065	
A6VM107 W40x2 DIN 5480 TH18	112	2074.053.007	B
A6VM107 W45x2 DIN 5480 TH21	112	2074.053.006	
A6VM160 W45x2 DIN 5480 TH21	112	2074.053.009	

INTERMOT

Motor tipi / Motor type Motortyp / Motore tipo Moteur type / Tipos de motor	Z	Kod / Code Bestell Nr. / Codice Code / Código	
NHM 100/150 26x32 UNI 8953	72.5	2074.013.052	A
NHM 200/250/300 32x38 UNI 8953	130	2074.053.016	B
NHM 400/450/500/600 36x42 UNI 8953	143	2074.053.017	
NHM 700/800/900/1000/1100 46x50 UNI 8953	118	2074.053.020	
NHM 700/800/900/1000/1100 46x50 UNI 8953	148	2074.073.002	C
NHM 700/800/900/1000/1100 46x50 UNI 8953	148	2074.083.002	D
NHM 1400/1600/1800/2000 62x72 UNI 8953	179	2074.053.021	B
NHM 1400/1600/1800/2000 62x72 UNI 8953	148	2074.073.003	C
NHM 1400/1600/1800/2000 62x72 UNI 8953	148	2074.083.003	D

LINDE

Motor tipi / Motor type Motortyp / Motore tipo Moteur type / Tipos de motor	Z	Kod / Code Bestell Nr. / Codice Code / Código	
MF43M 16/32 DP TH15	52	2074.013.003	A
MF63M 12/24 DP TH14	78	2074.013.015	
BMF35 25x22 DIN 5482 TH14	81	2074.013.070	
BMF50 30x27 DIN 5482 TH16	81	2074.013.060	
BMF75 35x31 DIN 5482 TH18	98	2074.013.061	
BMF 105 40x36 DIN 5482 TH20	90.5	2074.013.068	

Z ölçüleri sayfa 99'deki tablolardan doğrulanmalıdır.
Z dimensions have to be verified in the tables on page 99.
Das Mass Z wird in den entsprechenden Tabellen auf der Seite 99 festgestellt.
Le dimensioni Z riportate vanno verificate con le tabelle a pag. 99.
Les dimensions de Z sont à verifier dans les tableaux à page 99.
Las dimensiones Z indicadas tienen que verificarse con la tabla de la Pág. 99.

TR HİDROLİK MOTOR KAPLİNLERİ | EN HIDRAULIC MOTOR COUPLINGS | DE ANBAUVORRICHTUNG FUER HYDRAULIKMOTORE

IT PREDISPOSIZIONI PER MOTORI IDRAULICI | FR ADAPTATIONS POUR MOTEURS HYDRAULIQUE | ES ACOPLAMIENTOS PARA MOTORES HIDRÁULICOS

SAUER - DANFOSS (SAUER-SUNSTRAND)

Motor tipi / Motor type Motortyp / Motore tipo Moteur type / Tipos de motor	Z	Kod / Code Bestell Nr. / Codice Code / Código	
SERIE 90 (FLANGE SAE)			
90M032/042 16/32 DP TH13	52	2074.013.001	A
90M032/042 16/32 DP TH15	52	2074.013.003	
90M055 16/32 DP TH21	78	2074.013.017	
90M075/100 16/32 DP TH23	78	2074.013.018	
90M130 16/32 DP TH27	112	2074.053.012	B
SERIE 40 (FLANGE SAE)			
MMF025 16/32 DP TH13	52	2074.013.001	A
MMF035/MMV035 16/32 DP TH15	52	2074.013.003	
MMF046/MMV046 16/32 DP TH13	52	2074.013.001	
MMF046/MMV046 16/32 DP TH15	52	2074.013.003	
SERIE 51 (FLANGE SAE)			
51V060 (C6) 13/32 DP TH21	78	2074.013.017	A
51V060 (S1) 12/24 DP TH14	78	2074.013.015	
51V080 (C7) 16/32 DP TH23	78	2074.013.018	
51V080 (S1) 12/24 DP TH14	78	2074.013.015	
51V110 (C8) 16/32 DP TH27	112	2074.053.012	B
51V110 (F1) 8/16 DP TH13	112	2074.053.005	
OMF/SMF18 16/32 DP TH13	52	2074.013.001	A
OMV/SMV 16/32 DP TH13	67	2074.013.067	
SMF2 (033/052/070) 16/32 DP TH21	78	2074.013.017	
SMF3 (049/066) 16/32 DP TH21	78	2074.013.017	

SAI

Motor tipi / Motor type Motortyp / Motore tipo Moteur type / Tipos de motor	Z	Kod / Code Bestell Nr. / Codice Code / Código	
SAI M05 28x34 UNI 8953	73.5	2074.013.041	A
SAI M05 35x2 DIN 5480 TH16	73.5	2074.013.044	
SAI M1 28x34 UNI 8953	55.5	2074.013.022	
SAI M1 35x2 DIN 5480 TH16	55.5	2074.013.040	
SAI M2 36x40 UNI 8953	78.5	2074.013.066	
SAI M2/M3 36x40 UNI 8953	137	2074.053.010	B
SAI M4 56x65 UNI 8953	96	2074.053.025	

SAE J744C

Motor tipi / Motor type Motortyp / Motore tipo Moteur type / Tipos de motor	Z	Kod / Code Bestell Nr. / Codice Code / Código	
SAE A 16/32 DP TH9	61.5	2074.013.010	A
SAE B 16/32 DP TH13	52	2074.013.001	
SAE BB 16/32 DP TH15	52	2074.013.003	
SAE C 12/24 DP TH14	78	2074.013.015	
SAE CC 12/24 DP TH17	78	2074.013.016	
SAE D 8/16 DP TH13	112	2074.053.005	B

STAFFA

Motor tipi / Motor type Motortyp / Motore tipo Moteur type / Tipos de motor	Z	Kod / Code Bestell Nr. / Codice Code / Código	
HMC 030	142	2074.052.001	B

SAMHYDRAULIC

Motor tipi / Motor type Motortyp / Motore tipo Moteur type / Tipos de motor	Z	Kod / Code Bestell Nr. / Codice Code / Código	
AG/AR Ø 25 CH8	61.5	2074.012.012	A
AG/AR Ø 25.4 CH6.35	61.5	2074.012.014	
AG/AR 25x22 DIN 5482 TH14	61.5	2074.013.011	
AG/AR SAE 1"6B	61.5	2074.013.013	
AGS/ARS Ø 25 CH8	61.5	2074.012.026	
AGS/ARS Ø 32 CH10	77.5	2074.012.019	
AGS/ARS SAE 1"6B	61.5	2074.013.012	
HPR Ø 32 CH10	77.5	2074.012.019	
HPRC 12/24 DP TH12	38	2074.013.006	

PARKER (TRW TORQMOTOR)

Motor tipi / Motor type Motortyp / Motore tipo Moteur type / Tipos de motor	Z	Kod / Code Bestell Nr. / Codice Code / Código	
MF/MAC/MAF/MAB Ø 25 CH8	61.5	2074.012.012	A
MF/MAC/MAF/MAB Ø 25.4 CH6.35	61.5	2074.013.014	
MF/MAC/MAF/MAB SAE 1"6B	61.5	2074.013.013	
MAB/MAE Ø 31.75 CH7.96	77.5	2074.012.016	
ME 12/24 DP TH14	77.5	2074.013.047	

EATON (VICKERS)

Motor tipi / Motor type Motortyp / Motore tipo Moteur type / Tipos de motor	Z	Kod / Code Bestell Nr. / Codice Code / Código	
25M 16/32 DP TH13	52	2074.013.001	A
35M-45M 12/24 DP TH14	78	2074.013.015	
MVE-MFE19 16/32 DP TH15	52	2074.013.003	
35M-45M Ø 31.75 CH7.96	78	2074.012.020	

PARKER (VOLVO)

Motor tipi / Motor type Motortyp / Motore tipo Moteur type / Tipos de motor	Z	Kod / Code Bestell Nr. / Codice Code / Código	
F11/10 (M-C-K) Ø 20 CH6	81	2074.012.065	A
F11/10 (C-T) W20x1.25 DIN 5480 TH14	49	2074.013.046	
F11/19 (M-C-D) W25x1.25 DIN 5480 TH18	77	2074.013.068	
F11/39/58 (M-C-D) W30x2 DIN 5480 TH14	81.5	2074.013.030	
F11/78 (M-C-D) W40x2 DIN 5480 TH18	88.5	2074.013.065	
F11/110 (M-C-D) W40x2 DIN 5480 TH18	88.5	2074.013.034	
F11/110 (M-C-D) W40x2 DIN 5480 TH18	112	2074.053.018	B
F12/30 (M-F-Z) W25x1.25 DIN 5480 TH18	81	2074.013.062	A
F12/40 (M-F-D) W32x2 DIN 5480 TH14	78	2074.013.020	
F12/80 (M-I-D) W40x2 DIN 5480 TH18	81.5	2074.013.064	
V11 (60/80) (M-S-S) 12/24 DP TH14	78	2074.013.015	
V12/60 (M-I-C) W30x2 DIN 5480 TH14	78	2074.013.019	
V12/60 (M-I-D) W35x2 DIN 5480 TH16	78	2074.013.021	
V12-110 (U-S) S8/16 DP TH13	112	2074.053.005	B
V12/110 (M-I-D) W45x2 DIN 5480 TH21	112	2074.053.006	

WHITE

Motor tipi / Motor type Motortyp / Motore tipo Moteur type / Tipos de motor	Z	Kod / Code Bestell Nr. / Codice Code / Código	
HS-RS Ø 25 CH8	61.5	2074.012.012	A
HS-RS Ø 1"6B	61.5	2074.013.013	
RE Ø 32 CH10	77.5	2074.012.019	
RE Ø 31.75 CH7.96	77.5	2074.012.016	

Z ölçüleri sayfa 99'deki tablolardan doğrulanmalıdır.
Z dimensions have to be verified in the tables on page 99.
Das Mass Z wird in den entsprechenden Tabellen auf der Seite 99 festgestellt.
Le dimensioni Z riportate vanno verificate con le tabelle a pag. 99.
Les dimensions de Z sont à verifier dans les tableaux à page 99.
Las dimensiones Z indicadas tienen que verificarse con la tabla de la Pág. 99.

TR SAEJ 744C STANDARTLARINA GÖRE MOTOR BAĞLANTI FLANŞLARI

EN FLANGES FOR MOTORS ACCORDING TO THE SAEJ STD

DE FLANSCHE FÜR MOTORE NACH SAEJ 744C-NORM

IT FLANGIATURE PER MOTORI A NORME SAEJ 744C

FR BRIDAGES POUR MOTEURS AUX NORMES SAEJ 744C

ES EMBRIDADOS PARA MOTORES SEGÚN NORMAS SAEJ 744C

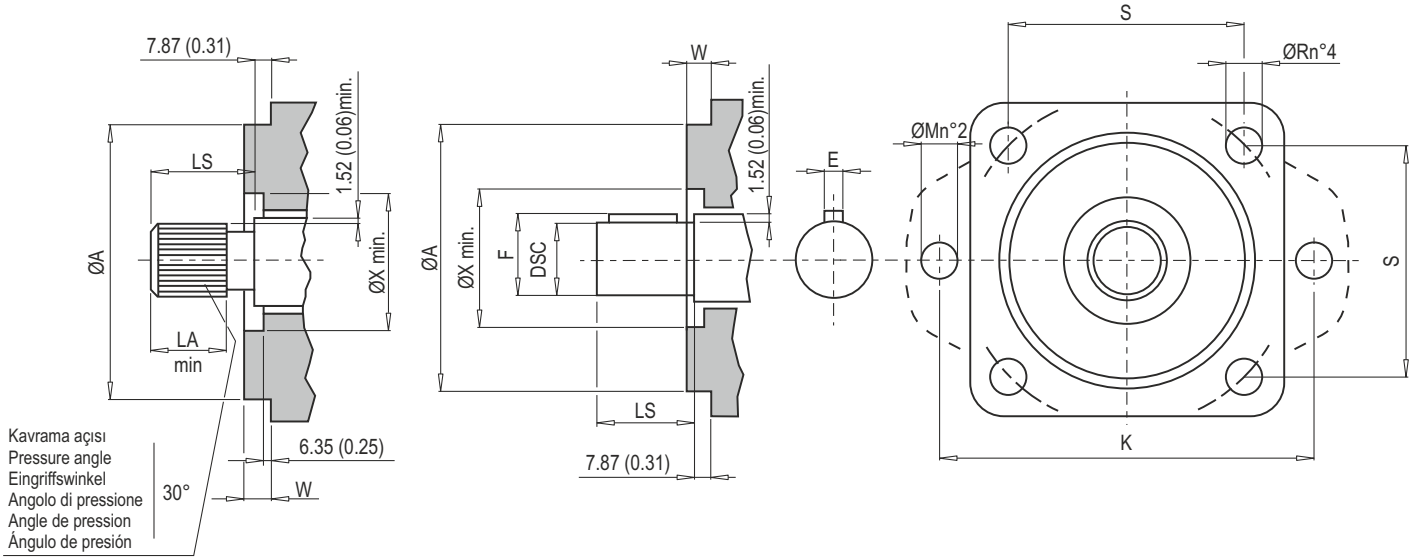

	A	W	X_{min}	K	M	S	R	Kayıcı milli Splined shaft Zahnwelle Albero cannelé Arbre cannelé Eje ranurado			Kamalı milli Parallel shaft Zylinderwelle Albero cilindrico Arbre cylindrique Eje cilíndrico			
								DP	LS	LA_{min}	DSC	LS	F	E
SAE A-A	50.80 (2.00)	6.35 (0.25)	— —	350.04 (13.785)	10.31 (0.406)	— —	— —	20/40 9T	19.05 (0.750)	5.08 (0.20)	12.70 (0.50)	19.05 (0.750)	14.07 (0.554)	3.175 (0.125)
SAE A	82.55 (3.250)	6.35 (0.25)	— —	106.37 (4.188)	11.10 (0.438)	— —	— —	16/32 9T	23.83 (0.938)	7.62 (0.30)	15.87 (0.625)	23.83 (0.938)	17.60 (0.693)	3.97 (0.1563)
SAE B	101.60 (4.00)	9.65 (0.38)	50.8 (2.00)	146.05 (5.75)	14.30 (0.562)	89.81 (3.536)	14.27 (0.562)	16/32 13T	33.32 (1.312)	10.16 (0.40)	22.22 (0.875)	33.32 (1.312)	24.94 (0.982)	6.35 (0.250)
SAE B-B	101.60 (4.00)	9.65 (0.38)	50.8 (2.00)	146.05 (5.75)	14.30 (0.562)	89.81 (3.536)	14.27 (0.562)	16/32 15T	38.10 (1.500)	12.70 (0.50)	25.40 (1.000)	38.10 (1.500)	28.10 (1.106)	6.35 (0.250)
SAE C	127 (5.00)	12.70 (0.50)	63.5 (2.50)	180.98 (7.125)	17.50 (0.688)	114.50 (4.508)	14.27 (0.562)	12/24 14T	47.63 (1.875)	15.24 (0.60)	31.75 (1.250)	47.63 (1.875)	35.20 (1.386)	7.94 (0.3125)
SAE C-C	127 (5.00)	12.70 (0.50)	63.5 (2.50)	180.98 (7.125)	17.50 (0.688)	114.50 (4.508)	14.27 (0.562)	12/24 17T	53.98 (2.125)	17.78 (0.70)	38.10 (1.500)	53.98 (2.125)	42.26 (1.664)	9.53 (0.375)
SAE D	152.40 (6.00)	12.70 (0.50)	69.85 (2.75)	228.60 (9.00)	20.60 (0.812)	161.65 (6.364)	20.63 (0.812)	8/16 13T	66.67 (2.625)	20.32 (0.80)	44.45 (1.750)	66.67 (2.625)	49.30 (1.941)	11.11 (0.4375)
SAE E	165.10 (6.50)	15.875 (0.625)	69.85 (2.75)	317.50 (12.5)	26.97 (1.062)	224.51 (8.839)	20.63 (0.812)	8/16 13T	66.67 (2.625)	20.32 (0.80)	44.45 (1.750)	66.67 (2.625)	49.30 (1.941)	11.11 (0.4375)
SAE F	177.80 (7.00)	15.875 (0.625)	69.85 (2.75)	317.50 (12.5)	26.87 (1.062)	247.52 (9.745)	26.98 (1.062)	8/16 15T	79.38 (3.125)	25.40 (1.00)	— —	79.38 (3.129)	— —	— —

TR ELEKTRİK MOTOR ADAPTÖRLERİ
EN ELECTRIC MOTOR COUPLINGS
DE ANBAUVORRICHTUNG FÜR ELEKTROMOTORE
IT PREDISPOSIZIONI PER MOTORI ELETTRICI
FR ADAPTATIONS POUR MOTEURS ELECTRIQUES
ES ACOPLAMIENTOS PARA MOTORES ELÉCTRICOS

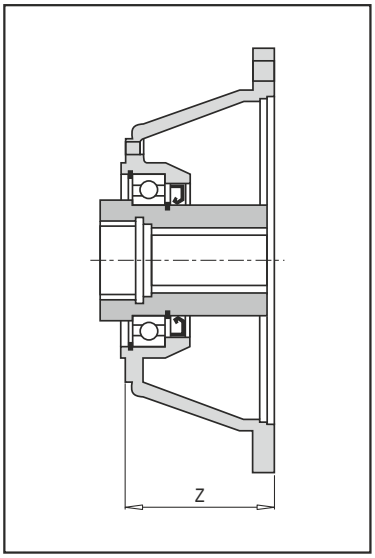

UNEL/IEC B5

	Z	Kod / Code Bestell Nr. / Codice Code / Código	
H63	36	2074.011.005	A
H71	36	2074.011.006	
H80	56	2074.011.001	
H90	56	2074.011.002	
H100/112	66	2074.011.003	
H132	100	2074.011.004	
H160	139	2074.011.047	
H180	139	2074.011.048	
H160	118	2074.051.001	B
H180	118	2074.051.002	
H200	148	2074.051.015	
H225	139	2074.051.016	
H250	148.5	2074.051.024	
H280	148.5	2074.051.025	
H160	150	2074.071.001	C
H180	150	2074.071.002	
H200	150	2074.071.003	
H225	139	2074.071.004	
H250	139	2074.071.005	
H280	139	2074.071.006	
H160	150	2074.081.001	D
H180	150	2074.081.002	
H200	150	2074.081.003	
H225	139	2074.081.004	
H250	139	2074.081.005	
H280	139	2074.081.006	

NEMA C

	Z	Kod / Code Bestell Nr. / Codice Code / Código	
143TC-145TC 182TC-184TC	80	2074.011.008	A
182TC-184TC 213TC-215TC	88.5	2074.011.009	
213TC-215TC	88.5	2074.011.010	
286TC	139	2074.051.006	B
326TC	149	2074.051.007	
365TS	149	2074.051.010	

Z ölçüleri tablodan doğrulanmalıdır.
Z dimensions have to be verified in the tables
Dass Mass Z wird in den entsprechenden Tabellen auf der festgestellt.
Le dimensioni Z riportate vanno verificate con le tabelle.
Les dimensions de Z sont à verifier dans les tableaux.
Las dimensiones Z indicadas tienen que verificarse con la tabla.

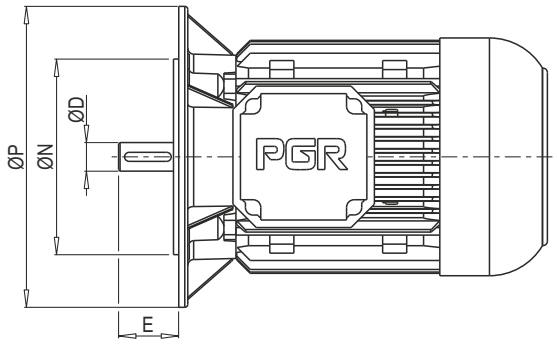

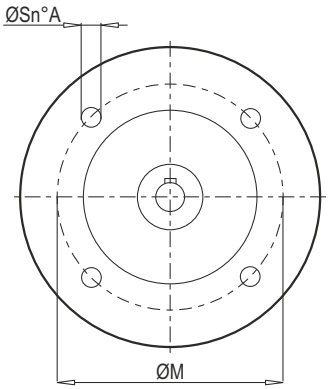

63...200

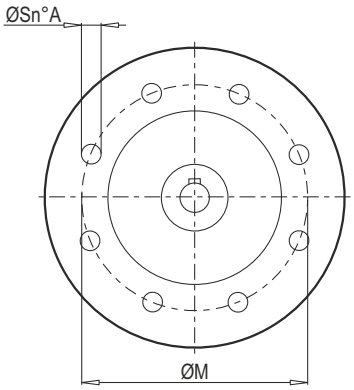

225...280

	Kutup sayısı - Number of poles - Anzahl Pole N° poli - Numero poles - N° de polos									ØD	E	ØP	ØM	ØN	ØS	A
	2			4			6									
	[kW]	[kW]	[kW]	[kW]	[kW]	[kW]	[kW]	[kW]	[kW]							
63	0.18		0.25	0.12		0.18	0.06		0.09	11	23	140	115	95	9.5	4
71	0.37		0.55	0.25		0.37	0.18		0.25	14	30	160	130	110	9.5	4
80	0.75		1.1	0.55		0.75	0.37		0.55	19	40	200	165	130	11.5	4
90	1.5		2.2	1.1		1.5	0.75		1.1	24	50	200	165	130	11.5	4
100/112	3		4	2.2	3	4	1.5		2.2	28	60	250	215	180	14	4
132	5.5		7.5	5.5		7.5	3	4	5.5	38	80	300	265	230	14	4
160	11	15	18.5	11		15	7.5		11	42	110	350	300	250	18	4
180	22			18.5		22	15			48	110	350	300	250	18	4
200	30		37	30			18.5		22	55	110	400	350	300	18	4
225	45			37		45	30			60 (55-2p)	140	450	400	350	18	8
250	55			55			37			65 (60-2p)	140	550	500	450	18	8
280	75		90	75		90	45		55	75 (65-2p)	140	550	500	450	18	8

TR SEMBOLLER | EN LEGEND | DE LEGENDE

IT SIMBOLOGIA | FR SYMBOLES | ES SİMBOLOS

Cfs	[Nm]	Statik fren momenti	Static braking torque	Bremsmoment, statisch	Coppia frenante statica	Couple de freinage statique	Momento de torsión estático de frenado
Fa	[N]	Eksenel yük	Axial load	Axiallast	Carico assiale	Charge axiale	Carga axial
fh		Süre faktörü	Duration factor	Lebensdauerfaktor	Fattore di durata	Facteur de durée	Factor de duración
fk		Termik güç ayarlama faktörü	Thermal power adjustment factor	Anpassungsfaktor Waerme - kapazitaet	Fattore di adeguamento della capacità termica	Facteur d'adaptation de la capacité thermique	Factor de adaptación de la capacidad térmica
Fr	[N]	Radyal yük	Radial load	Radiallast	Carico radiale	Charge radiale	Carga radial
fs		Servis faktörü	Service factor	Betriebsfaktor	Fattore di servizio	Facteur de service	Factor de servicio
η		Verim	Efficiency	Wirkungsgrad	Rendimento	Rendement	Rendimiento
iges		Tahvil oranı	Ratio	Übersetzung	Rapporto di riduzione	Rapport	Relación de reducción
K		Radyal yük düzeltme faktörü	Radial load correction factor	Korrekturkoeffizient der Radiallast	Coefficiente di correzione del carico radiale	Facteur de correction de charge radiale	Coeficiente de corrección de la carga radial
Kg	[Kg]	Ağırlık	Weight	Gewicht	Peso	Poids	Peso
Mc	[kNm]	Sürekli moment	Continuous torque	Dauerbetriebsmoment	Coppia continua	Couple continu	Momento de torsión continou
Me	[kNm]	Eşdeğer çalışma momenti	Equivalent working torque	Equivalentes Betriebsmoment	Coppia equivalente	Couple equivalent	Momento de torsión equivalente
M_{max}	[kNm]	Maksimum moment	Maximum torque	Maximales Betriebsmoment	Coppia massima	Couple maximal	Momento de torsión máximo
Mp	[kNm]	Çalışma pik momenti	Working peak torque	Spitzenmoment	Coppia di picco	Couple maximum de travail	Momento de torsión de pico
$n_{1\,max}$	[min^{-1}]	Maksimum giriş devri	Maximum input speed	Max. zulaessige Antriebsdrehzahl	Velocità massima in entrata	Vitesse maximale d'entrée	Velocidad máxima de entrada
n_2	[min^{-1}]	Çıkış devri	Output speed	Abtriebsdrehzahl	Velocità in uscita	Vitesse de sortie	Velocidad de salida
nxh		Tur sayısı	Cycles number	Anzahl der Zyklen	Numero cicli	N ᵇde cycles	Número de ciclos
Pa_{min}	[bar]	Açma basıncı	Opening pressure	Bremsoeffnungsdruck	Pressione di apertuna	Pression d'ouverture	Presión de apertura
P_{max}	[bar]	Maksimum basınç	Max pressure	Max. Betriebsdruck Bremse	Pressione massima	Pression maxi	Presión máxima
Pt	[kW]	Termik güç	Thermal power	Thermische Leistung	Potenza termica	Puissance thermique	Potencia térmica
i		Bilgi	Information	Information	Informazioni	Information	Informaciones
OIL		Yağ miktarı	Oil quantity	Oelmenge	Quantità lubrificante	Quantité d'huile	Cantidad de lubricante

TR PAM B5 ÖLÇÜLERİ | EN DIMENSIONS | DE ABMESSUNGEN
IT DIMENSIONI | FR ENCOMBREMENTS | ES DIMENSIONES

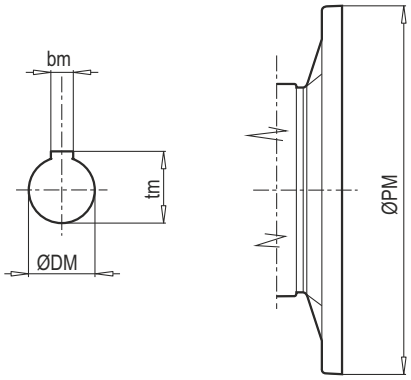

B5	IEC										
	056	063	071	080	090	100	112	132	160	180	200
PM	120	140	160	200	200	250	250	300	350	350	400
DM	9	11	14	19	24	28	28	38	42	48	55
bm	3	4	5	6	8	8	8	10	12	14	16
tm	10.4	12.8	16.3	21.8	27.3	31.3	31.3	41.3	45.3	51.8	59.3

PMRV (110 - 130) tm= 40,3 (IEC 132)

TR PAM B14 ÖLÇÜLERİ | EN DIMENSIONS | DE ABMESSUNGEN
IT DIMENSIONI | FR ENCOMBREMENTS | ES DIMENSIONES

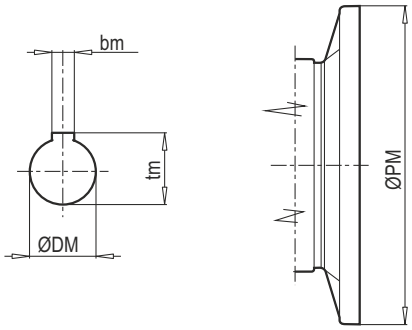

B14	IEC							
	056	063	071	080	090	100	112	132
PM	80	90	105	120	140	160	160	200
DM	9	11	14	19	24	28	28	38
bm	3	4	5	6	8	8	8	10
tm	10.4	12.8	16.3	21.8	27.3	31.3	31.3	41.3

Motorlu Seçim Tabloları

Selection Tables of Gearedmotors

Auswahltabellen der Getriebemotoren

Tabelle di selezione dei motoriduttori

Tables de Gearedmotors de sélection

Tablas de selección de gearedmotors

PL

TR TEKNİK TANIMLAR | EN TECHNICAL DESCRIPTIONS | DE TECHNISCHE BESCHREIBUNGEN

IT DESCRIZIONI TECNICHE | FR DESCRIPTIONS TECHNIQUES | ES DESCRIPCIONES TECNICAS

Motorlu redüktör performans tablolarının yapısı
Notify about performance tables for Geared motor.
Mitteilung über Leistungstafeln für Getriebemotor
Notificare sulle tabelle di performance per i motoriduttori
Aviser sur les tableux de performance pour le motoréducteur
Notificar sobre la tabla de performance para los motoreductores.

0.37 kW →

Redüktör motor gücü
Gear unit motor power
Potenza motore riduttore
Potencia del motor del reductor
Réducteur puissance du moteur
Getriebe Motorleistung

Motor gücü
Rated motor power
Motornennleistung
Potenza nominale del motore
Puissance nominale du moteur
Potencia nominal del motor

Çıkış devri
Output speed
Abtriebsdrehzahl
Vitesse de sortie
Velocità di uscita
Velocidad de salida

Termal Güç
Thermal power
Thermische leistung
Potenza termica
Puissance thermique
Potencia térmica

Müsaade edilebilir radyal yükler
Permissible radial force
Zulässige Radialkraft
Force radiale admissible
Fuerza radial admisible
Forza radiale ammessa

Ağırlık
Weight
Gewicht
Peso
Poids
Peso

P1 (kW)		iges	n2 (rpm)	M2 (Nm)	fs	Pt (20°C) (kW)	Pt (40°C) (kW)	Motor IE2	FR (kN)					~ Kg					mm
									MC	MS	PC	PS	CPC	M...	P...	F	FS	CPC	
0.37	PL 1004	624.4	2.2	1367	0.8	1.5	1.1	71M/4B	9.4	11.5	20.4	25.5	15.3	46	48	44	47	51	312-326
		576.0	2.4	1261	0.9				9.4	11.5	20.4	25.5	15.3						
		531.3	2.6	1163	0.9				8.5	10.5	18.6	23.3	14.0						
		477.9	2.9	1046	1.0				8.5	10.5	18.6	23.3	14.0						
		440.8	3.2	965	1.1				8.5	10.5	18.6	23.3	14.0						
		396.4	3.5	868	1.2				8.0	9.8	17.4	21.8	13.1						
		365.7	3.8	800	1.3				8.0	9.8	17.4	21.8	13.1						
		337.4	4.1	738	1.4				8.0	9.8	17.4	21.8	13.1						

Redüktör tipi
Type of gear unit
Getriebe typ
Tipo di riduttore
Type de réducteur
Tipo de Reductor

Tahvil oranı
Reduction ratio
Untersetzungsverhältnis
Rapporto di riduzione
Rapport de réduction
Relación de reducción

Çıkış momenti
Output torque
Abtriebsdrehmoment
Coppia di uscita
Par de salida
Couple de sortie

Servis faktörü
Service factor
Factor de servicio
Fattore di servizio
Facteur de service
Servicefaktor

Motor tipi
Type of motor
Motor typ
Tipo di motore
Type de moteur
Tipo de motor

Ölçü sayfaları
Drawing page
Zeichenblatt
La page de dessin
Página de dibujo
Zeichenblatt

P1 (kW)		iges	n2 (rpm)	M2 (Nm)	fs	Pt (20°C) (kW)	Pt (40°C) (kW)	Motor IE2	FR (kN)					~ Kg					mm
									MC	MS	PC	PS	CPC	M...	P...	F	FS	CPC	
0.12	PL 7004	2968.9	0.5	2107	2.5	8.0	5.6	63M/4A	-	-	115.0	138.0	86.3	-	102	84	105	119	392-403
	PL 2504	2369.2 1845.3 1589.0	0.6 0.8 0.9	1682 1310 1128	1.7 2.1 2.8	4.0	2.8	63M/4A	35.0 35.0 35.0	45.0 45.0 45.0	63.0 63.0 63.0	73.0 73.0 73.0	47.3 47.3 47.3	58	67	49	60	71	348-363
	PL 1604	1692.3 1428.8 1318.1 1185.4 1144.5 1093.5 966.3 907.2	0.8 1.0 1.1 1.2 1.2 1.3 1.4 1.5	1201 1014 936 841 812 776 686 644	1.7 1.4 2.1 1.6 2.4 2.5 2.7 2.9	1.5	1.1	63M/4A	11.0 11.0 11.0 11.0 11.0 11.0 11.0 9.4	13.5 13.5 13.5 13.5 13.5 13.5 13.5 11.5	24.0 24.0 24.0 24.0 24.0 24.0 24.0 20.4	30.0 30.0 30.0 30.0 30.0 30.0 30.0 25.5	18.0 18.0 18.0 18.0 18.0 18.0 18.0 15.3	44	46	42	45	49	326-340
	PL 1004	1692.3 1428.8 1318.1 1185.4 1144.5 1093.5 966.3 907.2 836.9 752.6 694.3 624.4 576.0 531.3	0.8 1.0 1.1 1.2 1.2 1.3 1.4 1.5 1.7 1.9 2.0 2.2 2.4 2.6	1201 1014 936 841 812 776 686 644 594 534 493 443 409 377	1.1 0.9 1.4 1.1 1.5 1.6 1.8 1.9 2.0 2.1 2.3 2.5 2.7 2.9	1.5	1.1	63M/4A	11.0 11.0 11.0 11.0 11.0 11.0 11.0 9.4 9.4 9.4 9.4 9.4 9.4 8.5	13.5 13.5 13.5 13.5 13.5 13.5 13.5 11.5 11.5 11.5 11.5 11.5 11.5 10.5	24.0 24.0 24.0 24.0 24.0 24.0 24.0 20.4 20.4 20.4 20.4 20.4 20.4 18.6	30.0 30.0 30.0 30.0 30.0 30.0 30.0 25.5 25.5 25.5 25.5 25.5 25.5 23.3	18.0 18.0 18.0 18.0 18.0 18.0 18.0 15.3 15.3 15.3 15.3 15.3 15.3 14.0	42	44	40	43	47	304-318
	PL 1003	394.9 327.6 307.5	3.5 4.3 4.6	290 241 226	2.2 3.0 2.8	5.0	3.5	63M/4A	8.0 8.0 7.4	9.8 9.8 9.1	17.4 17.4 16.2	21.8 21.8 20.3	13.1 13.1 12.2	36	38	34	37	41	304-318
0.18	PL 10004	2229.7	0.4	3693	2.3	11.0	7.7	71M/6A	65.0	95.0	-	-	48.8	142	-	109	147	192	410-421
	PL 7004	2968.9 1651.6	0.3 0.5	4917 2736	1.1 2.7	8.0	5.6	71M/6A	- -	- -	115.0 115.0	138.0 138.0	86.3 86.3	-	105	87	108	122	392-403
	PL 7004	2968.9	0.5	3161	1.6	8.0	5.6	63M/4A	-	-	115.0	138.0	86.3	-	102	84	105	119	392-403
	PL 7004	2968.9	0.9	1581	2.9	8.0	5.6	63M/2A	-	-	115.0	138.0	86.3	-	102	84	105	119	392-403
	PL 5004	1845.3 1589.0 1318.3 907.3	0.5 0.6 0.7 1.0	3056 2632 2184 1503	1.5 1.9 2.2 3.0	6.0	4.2	71M/6A	35.0 35.0 35.0 35.0	45.0 45.0 45.0 45.0	63.0 63.0 63.0 63.0	73.0 73.0 73.0 73.0	47.3 47.3 47.3 47.3	67	76	58	69	80	370-385
	PL 5004	1845.3 1589.0	0.8 0.9	1965 1692	2.1 2.7	6.0	4.2	63M/4B	35.0 35.0	45.0 45.0	63.0 63.0	73.0 73.0	47.3 47.3	64	73	55	66	77	370-385
	PL 2504	2369.2 1845.3 1589.0 1318.3 1121.1 1052.5 907.3 858.0 805.5	0.4 0.5 0.6 0.7 0.8 0.9 1.0 1.0 1.1	3924 3056 2632 2184 1857 1743 1503 1421 1334	0.8 1.0 1.3 1.5 2.1 2.2 2.1 2.6 2.8	4.0	2.8	71M/6A	35.0 35.0 35.0 35.0 35.0 35.0 35.0 35.0 35.0	45.0 45.0 45.0 45.0 45.0 45.0 45.0 45.0 45.0	63.0 63.0 63.0 63.0 63.0 63.0 63.0 63.0 63.0	73.0 73.0 73.0 73.0 73.0 73.0 73.0 73.0 73.0	47.3 47.3 47.3 47.3 47.3 47.3 47.3 47.3 47.3	61	70	52	63	74	348-363
	PL 2504	2369.2 1845.3 1589.0 1318.3 1121.1 907.3	0.6 0.8 0.9 1.1 1.2 1.5	2523 1965 1692 1404 1194 966	1.1 1.4 1.9 2.2 3.0 3.0	4.0	2.8	63M/4B	35.0 35.0 35.0 35.0 35.0 29.8	45.0 45.0 45.0 45.0 45.0 38.3	63.0 63.0 63.0 63.0 63.0 53.6	73.0 73.0 73.0 73.0 73.0 62.1	47.3 47.3 47.3 47.3 47.3 40.2	58	67	49	60	71	348-363
	PL 2504	2369.2 1845.3	1.2 1.5	1261 982	2.0 2.5	4.0	2.8	63M/2A	35.0 29.8	45.0 38.3	63.0 53.6	73.0 62.1	47.3 40.2	58	67	49	60	71	348-363

P1 (kW)		iges	n2 (rpm)	M2 (Nm)	fs	Pt (20°C) (kW)	Pt (40°C) (kW)	Motor IE2	FR (kN)					~ Kg					mm
									MC	MS	PC	PS	CPC	M...	P...	F	FS	CPC	
0.18	PL 1604	1692.3	0.5	2803	0.8	1.5	1.1	71M/6A	11.0	13.5	24.0	30.0	18.0	47	49	45	48	52	326-340
		1318.1	0.7	2183	1.0				11.0	13.5	24.0	30.0	18.0						
		1185.4	0.8	1963	0.8				11.0	13.5	24.0	30.0	18.0						
		1144.5	0.8	1896	1.1				11.0	13.5	24.0	30.0	18.0						
		1093.5	0.8	1811	1.1				11.0	13.5	24.0	30.0	18.0						
		966.3	0.9	1600	1.3				11.0	13.5	24.0	30.0	18.0						
		907.2	1.0	1503	1.3				11.0	13.5	24.0	30.0	18.0						
		836.9	1.1	1386	1.4				11.0	13.5	24.0	30.0	18.0						
		752.6	1.2	1247	1.5				11.0	13.5	24.0	30.0	18.0						
		694.3	1.3	1150	1.7				11.0	13.5	24.0	30.0	18.0						
		624.4	1.4	1034	1.8				11.0	13.5	24.0	30.0	18.0						
		576.0	1.6	954	1.9				9.4	11.5	20.4	25.5	15.3						
		531.3	1.7	880	2.1				9.4	11.5	20.4	25.5	15.3						
		477.9	1.9	792	2.2				9.4	11.5	20.4	25.5	15.3						
		440.8	2.0	730	2.4				9.4	11.5	20.4	25.5	15.3						
		396.4	2.3	657	2.6				9.4	11.5	20.4	25.5	15.3						
		365.7	2.5	606	2.8				9.4	11.5	20.4	25.5	15.3						
		337.4	2.7	559	3.0				8.5	10.5	18.6	23.3	14.0						
	PL 1604	1692.3	0.8	1802	1.2	1.5	1.1	63M/4B	11.0	13.5	24.0	30.0	18.0	44	46	42	45	49	326-340
		1428.8	1.0	1521	0.9				11.0	13.5	24.0	30.0	18.0						
		1318.1	1.1	1403	1.4				11.0	13.5	24.0	30.0	18.0						
		1185.4	1.2	1262	1.1				11.0	13.5	24.0	30.0	18.0						
		1144.5	1.2	1219	1.6				11.0	13.5	24.0	30.0	18.0						
		1093.5	1.3	1164	1.6				11.0	13.5	24.0	30.0	18.0						
		966.3	1.4	1029	1.8				11.0	13.5	24.0	30.0	18.0						
		907.2	1.5	966	1.9				9.4	11.5	20.4	25.5	15.3						
		836.9	1.7	891	2.0				9.4	11.5	20.4	25.5	15.3						
		752.6	1.9	801	2.2				9.4	11.5	20.4	25.5	15.3						
		694.3	2.0	739	2.4				9.4	11.5	20.4	25.5	15.3						
		624.4	2.2	665	2.6				9.4	11.5	20.4	25.5	15.3						
		576.0	2.4	613	2.8				9.4	11.5	20.4	25.5	15.3						
		531.3	2.6	566	3.0				8.5	10.5	18.6	23.3	14.0						
	PL 1604	1692.3	1.7	901	2.0	1.5	1.1	63M/2A	9.4	11.5	20.4	25.5	15.3	44	46	42	45	49	326-340
		1428.8	2.0	761	1.6				9.4	11.5	20.4	25.5	15.3						
		1318.1	2.1	702	2.5				9.4	11.5	20.4	25.5	15.3						
		1185.4	2.4	631	1.9				9.4	11.5	20.4	25.5	15.3						
		1144.5	2.4	609	2.8				9.4	11.5	20.4	25.5	15.3						
		1093.5	2.6	582	2.9				8.5	10.5	18.6	23.3	14.0						
	PL 1004	966.3	0.9	1600	0.8	1.5	1.1	71M/6A	11.0	13.5	24.0	30.0	18.0	45	47	43	46	50	304-318
		907.2	1.0	1503	0.9				11.0	13.5	24.0	30.0	18.0						
		836.9	1.1	1386	0.9				11.0	13.5	24.0	30.0	18.0						
		752.6	1.2	1247	1.0				11.0	13.5	24.0	30.0	18.0						
		694.3	1.3	1150	1.1				11.0	13.5	24.0	30.0	18.0						
		624.4	1.4	1034	1.2				11.0	13.5	24.0	30.0	18.0						
		576.0	1.6	954	1.3				9.4	11.5	20.4	25.5	15.3						
		531.3	1.7	880	1.3				9.4	11.5	20.4	25.5	15.3						
		477.9	1.9	792	1.4				9.4	11.5	20.4	25.5	15.3						
		440.8	2.0	730	1.5				9.4	11.5	20.4	25.5	15.3						
		396.4	2.3	657	1.7				9.4	11.5	20.4	25.5	15.3						
		365.7	2.5	606	1.8				9.4	11.5	20.4	25.5	15.3						
		337.4	2.7	559	1.9				8.5	10.5	18.6	23.3	14.0						
	PL 1004	1318.1	1.1	1403	0.9	1.5	1.1	63M/4B	11.0	13.5	24.0	30.0	18.0	42	44	40	43	47	304-318
		1144.5	1.2	1219	1.0				11.0	13.5	24.0	30.0	18.0						
		1093.5	1.3	1164	1.1				11.0	13.5	24.0	30.0	18.0						
		966.3	1.4	1029	1.2				11.0	13.5	24.0	30.0	18.0						
		907.2	1.5	966	1.2				9.4	11.5	20.4	25.5	15.3						
		836.9	1.7	891	1.3				9.4	11.5	20.4	25.5	15.3						
		752.6	1.9	801	1.4				9.4	11.5	20.4	25.5	15.3						
		694.3	2.0	739	1.5				9.4	11.5	20.4	25.5	15.3						
		624.4	2.2	665	1.7				9.4	11.5	20.4	25.5	15.3						
		576.0	2.4	613	1.8				9.4	11.5	20.4	25.5	15.3						
		531.3	2.6	566	1.9				8.5	10.5	18.6	23.3	14.0						
		477.9	2.9	509	2.1				8.5	10.5	18.6	23.3	14.0						
		440.8	3.2	469	2.2				8.5	10.5	18.6	23.3	14.0						
		396.4	3.5	422	2.4				8.0	9.8	17.4	21.8	13.1						
		365.7	3.8	389	2.6				8.0	9.8	17.4	21.8	13.1						
		337.4	4.1	359	2.8				8.0	9.8	17.4	21.8	13.1						

P1 (kW)		iges	n2 (rpm)	M2 (Nm)	fs	Pt (20°C) (kW)	Pt (40°C) (kW)	Motor IE2	FR (kN)					~ Kg					mm
									MC	MS	PC	PS	CPC	M...	P...	F	FS	CPC	
0.18	PL 1004	1692.3	1.7	901	1.3	1.5	1.1	63M/2A	9.4	11.5	20.4	25.5	15.3	42	44	40	43	47	304-318
		1428.8	2.0	761	1.1				9.4	11.5	20.4	25.5	15.3						
		1318.1	2.1	702	1.6				9.4	11.5	20.4	25.5	15.3						
		1185.4	2.4	631	1.3				9.4	11.5	20.4	25.5	15.3						
		1144.5	2.4	609	1.8				9.4	11.5	20.4	25.5	15.3						
		1093.5	2.6	582	1.9				8.5	10.5	18.6	23.3	14.0						
		966.3	2.9	514	2.1				8.5	10.5	18.6	23.3	14.0						
		907.2	3.1	483	2.2				8.5	10.5	18.6	23.3	14.0						
		836.9	3.3	446	2.3				8.5	10.5	18.6	23.3	14.0						
		752.6	3.7	401	2.5				8.0	9.8	17.4	21.8	13.1						
		694.3	4.0	370	2.7				8.0	9.8	17.4	21.8	13.1						
		624.4	4.5	332	3.0				8.0	9.8	17.4	21.8	13.1						
	PL 2503	424.1	2.1	728	2.4	8.0	5.6	71M/6A	29.8	38.3	53.6	62.1	40.2	55	64	46	57	68	348-363
		330.3	2.7	567	3.0				27.1	34.9	48.8	56.6	36.6						
	PL 2503	424.1	3.3	468	2.5	8.0	5.6	63M/4B	27.1	34.9	48.8	56.6	36.6	52	61	43	54	65	348-363
	PL 1603	394.9	2.3	678	1.5	5.0	3.5	71M/6A	9.4	11.5	20.4	25.5	15.3	41	43	39	42	46	326-340
		327.6	2.7	562	2.1				8.5	10.5	18.6	23.3	14.0						
		307.5	2.9	528	1.8				8.5	10.5	18.6	23.3	14.0						
		271.8	3.3	467	2.5				8.5	10.5	18.6	23.3	14.0						
		255.2	3.5	438	2.6				8.0	9.8	17.4	21.8	13.1						
		211.7	4.3	363	3.0				8.0	9.8	17.4	21.8	13.1						
	PL 1603	394.9	3.5	436	2.1	5.0	3.5	63M/4B	8.0	9.8	17.4	21.8	13.1	38	40	36	39	43	326-340
		327.6	4.3	361	3.0				8.0	9.8	17.4	21.8	13.1						
		307.5	4.6	339	2.6				7.4	9.1	16.2	20.3	12.2						
	PL 1003	394.9	2.3	678	1.1	5.0	3.5	71M/6A	9.4	11.5	20.4	25.5	15.3	39	41	37	40	44	304-318
		327.6	2.7	562	1.4				8.5	10.5	18.6	23.3	14.0						
		307.5	2.9	528	1.3				8.5	10.5	18.6	23.3	14.0						
		271.8	3.3	467	1.6				8.5	10.5	18.6	23.3	14.0						
		255.2	3.5	438	1.7				8.0	9.8	17.4	21.8	13.1						
		211.7	4.3	363	2.0				8.0	9.8	17.4	21.8	13.1						
		208.0	4.3	357	2.8				8.0	9.8	17.4	21.8	13.1						
	PL 1003	394.9	3.5	436	1.5	5.0	3.5	63M/4B	8.0	9.8	17.4	21.8	13.1	36	38	34	37	41	304-318
		327.6	4.3	361	2.0				8.0	9.8	17.4	21.8	13.1						
		307.5	4.6	339	1.8				7.4	9.1	16.2	20.3	12.2						
		271.8	5.2	300	2.3				7.4	9.1	16.2	20.3	12.2						
		255.2	5.5	282	2.5				7.4	9.1	16.2	20.3	12.2						
		211.7	6.6	234	2.9				6.3	7.8	13.8	17.3	10.4						
	PL 1003	394.9	7.1	218	2.7	5.0	3.5	63M/2A	6.3	7.8	13.8	17.3	10.4	36	38	34	37	41	304-318
0.25	PL 16004	2229.7	0.4	5129	2.5	11.0	7.7	71M/6B	60.0	106.0	140.0	186.0	45.0	152	179	121	157	202	428-445
	PL 10004	2229.7	0.4	5129	1.7	11.0	7.7	71M/6B	65.0	95.0	-	-	48.8	144	-	111	149	194	410-421
		1849.8	0.5	4255	2.5				65.0	95.0	-	-	48.8						
		1530.9	0.6	3522	3.0				65.0	95.0	-	-	48.8						
	PL 10004	2229.7	0.6	3297	2.4	11.0	7.7	71M/4A	65.0	95.0	-	-	48.8	143	-	110	148	193	410-421
	PL 7004	2968.9	0.3	6830	0.8	8.0	5.6	71M/6B	-	-	115.0	138.0	86.3	-	107	89	110	124	392-400
		1651.6	0.5	3799	1.9				-	-	115.0	138.0	86.3						
		1366.9	0.7	3144	2.2				-	-	115.0	138.0	86.3						
		1177.0	0.8	2708	2.6				-	-	115.0	138.0	86.3						
		1048.7	0.9	2412	2.8				-	-	115.0	138.0	86.3						
		976.5	0.9	2246	3.0				-	-	115.0	138.0	86.3						
	PL 7004	2968.9	0.5	4391	1.2	8.0	5.6	71M/4A	-	-	115.0	138.0	86.3	-	106	88	109	123	392-400
		1651.6	0.8	2442	2.8				-	-	115.0	138.0	86.3						
	PL 7004	2968.9	0.9	2195	2.1	8.0	5.6	63M/2B	-	-	115.0	138.0	86.3	-	103	85	106	120	392-400
	PL 5004	1845.3	0.5	4245	1.0	6.0	4.2	71M/6B	35.0	45.0	63.0	73.0	47.3	69	78	60	71	82	370-385
		1589.0	0.6	3655	1.4				35.0	45.0	63.0	73.0	47.3						
		1318.3	0.7	3033	1.6				35.0	45.0	63.0	73.0	47.3						
		1121.1	0.8	2579	2.2				35.0	45.0	63.0	73.0	47.3						
		1052.5	0.9	2421	2.3				35.0	45.0	63.0	73.0	47.3						
		907.3	1.0	2087	2.2				35.0	45.0	63.0	73.0	47.3						
		858.0	1.0	1974	2.8				35.0	45.0	63.0	73.0	47.3						
		805.5	1.1	1853	2.9				35.0	45.0	63.0	73.0	47.3						
	PL 5004	1845.3	0.8	2729	1.5	6.0	4.2	71M/4A	35.0	45.0	63.0	73.0	47.3	68	77	59	70	81	370-385
		1589.0	0.9	2350	2.0				35.0	45.0	63.0	73.0	47.3						
		1318.3	1.1	1950	2.3				35.0	45.0	63.0	73.0	47.3						
	PL 5004	1845.3	1.5	1364	2.7	6.0	4.2	63M/2B	29.8	38.3	53.6	62.1	40.2	65	74	56	67	78	370-385

P1 (kW)		iges	n2 (rpm)	M2 (Nm)	fs	Pt (20°C) (kW)	Pt (40°C) (kW)	Motor IE2	FR (kN)					~ Kg					mm
									MC	MS	PC	PS	CPC	M...	P...	F	FS	CPC	
0.25	PL 2504	1589.0	0.6	3655	0.9	4.0	2.8	71M/6B	35.0	45.0	63.0	73.0	47.3	63	72	54	65	76	348-363
		1318.3	0.7	3033	1.1				35.0	45.0	63.0	73.0	47.3						
		1121.1	0.8	2579	1.5				35.0	45.0	63.0	73.0	47.3						
		1052.5	0.9	2421	1.6				35.0	45.0	63.0	73.0	47.3						
		907.3	1.0	2087	1.5				35.0	45.0	63.0	73.0	47.3						
		858.0	1.0	1974	1.9				35.0	45.0	63.0	73.0	47.3						
		805.5	1.1	1853	2.0				35.0	45.0	63.0	73.0	47.3						
		737.7	1.2	1697	2.3				35.0	45.0	63.0	73.0	47.3						
		668.2	1.3	1537	2.3				35.0	45.0	63.0	73.0	47.3						
		612.0	1.5	1408	2.7				35.0	45.0	63.0	73.0	47.3						
		554.4	1.6	1275	2.7				29.8	38.3	53.6	62.1	40.2						
		511.4	1.8	1176	2.9				29.8	38.3	53.6	62.1	40.2						
	PL 2504	2369.2	0.6	3504	0.8	4.0	2.8	71M/4A	35.0	45.0	63.0	73.0	47.3	62	71	53	64	75	348-363
		1845.3	0.8	2729	1.0				35.0	45.0	63.0	73.0	47.3						
		1589.0	0.9	2350	1.4				35.0	45.0	63.0	73.0	47.3						
		1318.3	1.1	1950	1.6				35.0	45.0	63.0	73.0	47.3						
		1121.1	1.2	1658	2.2				35.0	45.0	63.0	73.0	47.3						
		1052.5	1.3	1556	2.3				35.0	45.0	63.0	73.0	47.3						
		907.3	1.5	1342	2.2				29.8	38.3	53.6	62.1	40.2						
		858.0	1.6	1269	2.7				29.8	38.3	53.6	62.1	40.2						
		805.5	1.7	1191	2.8				29.8	38.3	53.6	62.1	40.2						
	PL 2504	2369.2	1.2	1752	1.4	4.0	2.8	63M/2B	35.0	45.0	63.0	73.0	47.3	59	68	50	61	72	348-363
		1845.3	1.5	1364	1.8				29.8	38.3	53.6	62.1	40.2						
		1589.0	1.8	1175	2.4				29.8	38.3	53.6	62.1	40.2						
		1318.3	2.1	975	2.8				29.8	38.3	53.6	62.1	40.2						
	PL 1604	1144.5	0.8	2633	0.8	1.5	1.1	71M/6B	11.0	13.5	24.0	30.0	18.0	49	51	47	50	54	326-340
		1093.5	0.8	2516	0.8				11.0	13.5	24.0	30.0	18.0						
		966.3	0.9	2223	0.9				11.0	13.5	24.0	30.0	18.0						
		907.2	1.0	2087	1.0				11.0	13.5	24.0	30.0	18.0						
		836.9	1.1	1925	1.0				11.0	13.5	24.0	30.0	18.0						
		752.6	1.2	1731	1.1				11.0	13.5	24.0	30.0	18.0						
		694.3	1.3	1597	1.2				11.0	13.5	24.0	30.0	18.0						
		624.4	1.4	1436	1.3				11.0	13.5	24.0	30.0	18.0						
		576.0	1.6	1325	1.4				9.4	11.5	20.4	25.5	15.3						
		531.3	1.7	1222	1.5				9.4	11.5	20.4	25.5	15.3						
		477.9	1.9	1099	1.6				9.4	11.5	20.4	25.5	15.3						
		440.8	2.0	1014	1.7				9.4	11.5	20.4	25.5	15.3						
		396.4	2.3	912	1.9				9.4	11.5	20.4	25.5	15.3						
		365.7	2.5	841	2.0				9.4	11.5	20.4	25.5	15.3						
		337.4	2.7	776	2.2				8.5	10.5	18.6	23.3	14.0						
	PL 1604	1692.3	0.8	2503	0.8	1.5	1.1	71M/4A	11.0	13.5	24.0	30.0	18.0	48	50	46	49	53	326-340
		1318.1	1.1	1949	1.0				11.0	13.5	24.0	30.0	18.0						
		1185.4	1.2	1753	0.8				11.0	13.5	24.0	30.0	18.0						
		1144.5	1.2	1693	1.1				11.0	13.5	24.0	30.0	18.0						
		1093.5	1.3	1617	1.2				11.0	13.5	24.0	30.0	18.0						
		966.3	1.4	1429	1.3				11.0	13.5	24.0	30.0	18.0						
		907.2	1.5	1342	1.4				9.4	11.5	20.4	25.5	15.3						
		836.9	1.7	1238	1.5				9.4	11.5	20.4	25.5	15.3						
		752.6	1.9	1113	1.6				9.4	11.5	20.4	25.5	15.3						
		694.3	2.0	1027	1.7				9.4	11.5	20.4	25.5	15.3						
		624.4	2.2	923	1.9				9.4	11.5	20.4	25.5	15.3						
		576.0	2.4	852	2.0				9.4	11.5	20.4	25.5	15.3						
		531.3	2.6	786	2.1				8.5	10.5	18.6	23.3	14.0						
		477.9	2.9	707	2.3				8.5	10.5	18.6	23.3	14.0						
		440.8	3.2	652	2.5				8.5	10.5	18.6	23.3	14.0						
		396.4	3.5	586	2.7				8.0	9.8	17.4	21.8	13.1						
		365.7	3.8	541	2.9				8.0	9.8	17.4	21.8	13.1						
	PL 1604	1692.3	1.7	1251	1.5	1.5	1.1	63M/2B	9.4	11.5	20.4	25.5	15.3	45	47	43	46	50	326-340
		1428.8	2.0	1056	1.2				9.4	11.5	20.4	25.5	15.3						
		1318.1	2.1	975	1.8				9.4	11.5	20.4	25.5	15.3						
		1185.4	2.4	877	1.4				9.4	11.5	20.4	25.5	15.3						
		1144.5	2.4	846	2.0				9.4	11.5	20.4	25.5	15.3						
		1093.5	2.6	809	2.1				8.5	10.5	18.6	23.3	14.0						
		966.3	2.9	715	2.3				8.5	10.5	18.6	23.3	14.0						
		907.2	3.1	671	2.4				8.5	10.5	18.6	23.3	14.0						
		836.9	3.3	619	2.6				8.5	10.5	18.6	23.3	14.0						
		752.6	3.7	556	2.8				8.0	9.8	17.4	21.8	13.1						
		694.3	4.0	513	3.0				8.0	9.8	17.4	21.8	13.1						

P1 (kW)		iges	n2 (rpm)	M2 (Nm)	fs	Pt (20°C) (kW)	Pt (40°C) (kW)	Motor IE2	FR (kN)					~ Kg					mm
									MC	MS	PC	PS	CPC	M...	P...	F	FS	CPC	
0.25	PL 1004	694.3	1.3	1597	0.8	1.5	1.1	71M/6B	11.0	13.5	24.0	30.0	18.0	47	49	45	48	52	304-318
		624.4	1.4	1436	0.8				11.0	13.5	24.0	30.0	18.0						
		576.0	1.6	1325	0.9				9.4	11.5	20.4	25.5	15.3						
		531.3	1.7	1222	1.0				9.4	11.5	20.4	25.5	15.3						
		477.9	1.9	1099	1.0				9.4	11.5	20.4	25.5	15.3						
		440.8	2.0	1014	1.1				9.4	11.5	20.4	25.5	15.3						
		396.4	2.3	912	1.2				9.4	11.5	20.4	25.5	15.3						
		365.7	2.5	841	1.3				9.4	11.5	20.4	25.5	15.3						
		337.4	2.7	776	1.4				8.5	10.5	18.6	23.3	14.0						
	PL 1004	1093.5	1.3	1617	0.8	1.5	1.1	71M/4A	11.0	13.5	24.0	30.0	18.0	46	48	44	47	51	304-318
		966.3	1.4	1429	0.8				11.0	13.5	24.0	30.0	18.0						
		907.2	1.5	1342	0.9				9.4	11.5	20.4	25.5	15.3						
		836.9	1.7	1238	1.0				9.4	11.5	20.4	25.5	15.3						
		752.6	1.9	1113	1.0				9.4	11.5	20.4	25.5	15.3						
		694.3	2.0	1027	1.1				9.4	11.5	20.4	25.5	15.3						
		624.4	2.2	923	1.2				9.4	11.5	20.4	25.5	15.3						
		576.0	2.4	852	1.3				9.4	11.5	20.4	25.5	15.3						
		531.3	2.6	786	1.4				8.5	10.5	18.6	23.3	14.0						
		477.9	2.9	707	1.5				8.5	10.5	18.6	23.3	14.0						
		440.8	3.2	652	1.6				8.5	10.5	18.6	23.3	14.0						
		396.4	3.5	586	1.7				8.0	9.8	17.4	21.8	13.1						
		365.7	3.8	541	1.9				8.0	9.8	17.4	21.8	13.1						
		337.4	4.1	499	2.0				8.0	9.8	17.4	21.8	13.1						
	PL 1004	1692.3	1.7	1251	0.9	1.5	1.1	63M/2B	9.4	11.5	20.4	25.5	15.3	43	45	41	44	48	304-318
		1428.8	2.0	1056	0.8				9.4	11.5	20.4	25.5	15.3						
		1318.1	2.1	975	1.2				9.4	11.5	20.4	25.5	15.3						
		1185.4	2.4	877	0.9				9.4	11.5	20.4	25.5	15.3						
		1144.5	2.4	846	1.3				9.4	11.5	20.4	25.5	15.3						
		1093.5	2.6	809	1.3				8.5	10.5	18.6	23.3	14.0						
		966.3	2.9	715	1.5				8.5	10.5	18.6	23.3	14.0						
		907.2	3.1	671	1.6				8.5	10.5	18.6	23.3	14.0						
		836.9	3.3	619	1.7				8.5	10.5	18.6	23.3	14.0						
		752.6	3.7	556	1.8				8.0	9.8	17.4	21.8	13.1						
		694.3	4.0	513	2.0				8.0	9.8	17.4	21.8	13.1						
		624.4	4.5	462	2.1				8.0	9.8	17.4	21.8	13.1						
		576.0	4.9	426	2.3				7.4	9.1	16.2	20.3	12.2						
		531.3	5.3	393	2.4				7.4	9.1	16.2	20.3	12.2						
		477.9	5.9	353	2.7				6.6	8.1	14.4	18.0	10.8						
		440.8	6.4	326	2.9				6.6	8.1	14.4	18.0	10.8						
	PL 2503	424.1	2.1	1011	1.7	8.0	5.6	71M/6B	29.8	38.3	53.6	62.1	40.2	57	66	48	59	70	348-363
		330.3	2.7	787	2.2				27.1	34.9	48.8	56.6	36.6						
	PL 2503	424.1	3.3	650	1.8	8.0	5.6	71M/4A	27.1	34.9	48.8	56.6	36.6	56	65	47	58	69	348-363
	PL 1603	394.9	2.3	941	1.1	5.0	3.5	71M/6B	9.4	11.5	20.4	25.5	15.3	43	45	41	44	48	326-340
		327.6	2.7	781	1.5				8.5	10.5	18.6	23.3	14.0						
		307.5	2.9	733	1.3				8.5	10.5	18.6	23.3	14.0						
		271.8	3.3	648	1.8				8.5	10.5	18.6	23.3	14.0						
		255.2	3.5	608	1.8				8.0	9.8	17.4	21.8	13.1						
		211.7	4.3	505	2.2				8.0	9.8	17.4	21.8	13.1						
	PL 1603	394.9	3.5	605	1.5	5.0	3.5	71M/4A	8.0	9.8	17.4	21.8	13.1	42	44	40	43	47	326-340
		327.6	4.3	502	2.2				8.0	9.8	17.4	21.8	13.1						
		307.5	4.6	471	1.9				7.4	9.1	16.2	20.3	12.2						
		271.8	5.2	417	2.5				7.4	9.1	16.2	20.3	12.2						
		255.2	5.5	391	2.7				7.4	9.1	16.2	20.3	12.2						
	PL 1603	394.9	7.1	303	2.8	5.0	3.5	63M/2B	6.3	7.8	13.8	17.3	10.4	39	41	37	40	44	326-340
	PL 1003	394.9	2.3	941	0.8	5.0	3.5	71M/6B	9.4	11.5	20.4	25.5	15.3	41	43	39	42	46	304-318
		327.6	2.7	781	1.0				8.5	10.5	18.6	23.3	14.0						
		307.5	2.9	733	0.9				8.5	10.5	18.6	23.3	14.0						
		271.8	3.3	648	1.2				8.5	10.5	18.6	23.3	14.0						
		255.2	3.5	608	1.2				8.0	9.8	17.4	21.8	13.1						
		211.7	4.3	505	1.4				8.0	9.8	17.4	21.8	13.1						
		208.0	4.3	496	2.0				8.0	9.8	17.4	21.8	13.1						
		172.6	5.2	411	2.3				7.4	9.1	16.2	20.3	12.2						
		162.0	5.6	386	2.5				6.6	8.1	14.4	18.0	10.8						
		134.4	6.7	320	2.9				6.3	7.8	13.8	17.3	10.4						
	PL 1003	394.9	3.5	605	1.1	5.0	3.5	71M/4A	8.0	7.8	17.4	21.8	13.1	40	42	38	41	45	304-318
		327.6	4.3	502	1.4				8.0	7.8	17.4	21.8	13.1						
		307.5	4.6	471	1.3				7.4	9.1	16.2	20.3	12.2						
		271.8	5.2	417	1.7				7.4	9.1	16.2	20.3	12.2						
		255.2	5.5	391	1.8				7.4	9.1	16.2	20.3	12.2						
		211.7	6.6	324	2.1				6.3	9.8	13.8	17.3	10.4						
		208.0	6.7	319	2.9				6.3	9.8	13.8	17.3	10.4						

P1 (kW)		iges	n2 (rpm)	M2 (Nm)	fs	Pt (20°C) (kW)	Pt (40°C) (kW)	Motor IE2	FR (kN)					~ Kg					mm
									MC	MS	PC	PS	CPC	M...	P...	F	FS	CPC	
0.25	PL 1003	394.9	7.1	303	1.9	5.0	3.5	63M/2B	6.3	7.8	13.8	17.3	10.4	37	39	35	38	42	304-318
		327.6	8.5	251	2.6				5.8	7.1	12.6	15.8	9.5						
		307.5	9.1	236	2.4				5.8	7.1	12.6	15.8	9.5						
		271.8	10.3	208	3.0				5.5	6.8	12.0	15.0	9.0						
0.37	PL 16004	2229.7	0.4	7591	1.7	11.0	7.7	80M/6A	60.0	106.0	140.0	186.0	45.0	155	182	124	160	205	428-445
		1849.8	0.5	6298	2.5				60.0	106.0	140.0	186.0	45.0						
		1530.9	0.6	5212	2.9				60.0	106.0	140.0	186.0	45.0						
	PL 16004	2229.7	0.6	4880	2.3	11.0	7.7	71M/4B	60.0	106.0	140.0	186.0	45.0	151	178	120	156	201	428-445
	PL 10004	2229.7	0.4	7591	1.1	11.0	7.7	80M/6A	65.0	95.0	-	-	48.8	147	-	114	152	197	410-421
		1849.8	0.5	6298	1.7				65.0	95.0	-	-	48.8						
		1530.9	0.6	5212	2.0				65.0	95.0	-	-	48.8						
		1270.1	0.7	4324	2.4				65.0	95.0	-	-	48.8						
		1093.7	0.8	3724	2.7				65.0	95.0	-	-	48.8						
	PL 10004	2229.7	0.6	4880	1.6	11.0	7.7	71M/4B	65.0	95.0	-	-	48.8	143	-	110	148	193	410-421
		1849.8	0.8	4049	2.5				65.0	95.0	-	-	48.8						
		1530.9	0.9	3351	2.9				65.0	95.0	-	-	48.8						
	PL 10004	2229.7	1.3	2440	2.9	11.0	7.7	71M/2C	65.0	95.0	-	-	48.8	141	-	108	146	191	410-421
	PL 7004	1651.6	0.5	5623	1.3	8.0	5.6	80M/6A	-	-	115.0	138.0	86.3	-	110	92	113	127	392-400
		1366.9	0.7	4654	1.5				-	-	115.0	138.0	86.3						
		1177.0	0.8	4007	1.7				-	-	115.0	138.0	86.3						
		1048.7	0.9	3570	1.9				-	-	115.0	138.0	86.3						
		976.5	0.9	3325	2.0				-	-	115.0	138.0	86.3						
		870.0	1.0	2962	2.2				-	-	115.0	138.0	86.3						
		832.3	1.1	2834	2.6				-	-	115.0	138.0	86.3						
		768.7	1.2	2617	2.8				-	-	115.0	138.0	86.3						
		747.3	1.2	2544	2.5				-	-	115.0	138.0	86.3						
	PL 7004	2968.9	0.5	6498	0.8	8.0	5.6	71M/4B	-	-	115.0	138.0	86.3	-	106	88	109	123	392-400
		1651.6	0.8	3615	1.9				-	-	115.0	138.0	86.3						
		1366.9	1.0	2992	2.2				-	-	115.0	138.0	86.3						
		1177.0	1.2	2576	2.5				-	-	115.0	138.0	86.3						
		1048.7	1.3	2295	2.7				-	-	115.0	138.0	86.3						
		976.5	1.4	2137	2.9				-	-	115.0	138.0	86.3						
	PL 7004	2968.9	0.9	3249	1.4	8.0	5.6	71M/2C	-	-	115.0	138.0	86.3	-	104	86	107	121	392-400
	PL 5004	1589.0	0.6	5410	0.9	6.0	4.2	80M/6A	35.0	45.0	63.0	73.0	47.3	72	81	63	74	85	370-385
		1318.3	0.7	4488	1.1				35.0	45.0	63.0	73.0	47.3						
		1121.1	0.8	3817	1.5				35.0	45.0	63.0	73.0	47.3						
		1052.5	0.9	3583	1.6				35.0	45.0	63.0	73.0	47.3						
		907.3	1.0	3089	1.5				35.0	45.0	63.0	73.0	47.3						
		858.0	1.0	2921	1.9				35.0	45.0	63.0	73.0	47.3						
		805.5	1.1	2742	2.0				35.0	45.0	63.0	73.0	47.3						
		737.7	1.2	2512	2.3				35.0	45.0	63.0	73.0	47.3						
		668.2	1.3	2275	2.3				35.0	45.0	63.0	73.0	47.3						
		612.0	1.5	2084	2.7				35.0	45.0	63.0	73.0	47.3						
		554.4	1.6	1888	2.7				29.8	38.3	53.6	62.1	40.2						
		511.4	1.8	1741	2.8				29.8	38.3	53.6	62.1	40.2						
		365.8	2.5	1245	3.0				29.8	38.3	53.6	62.1	40.2						
	PL 5004	1845.3	0.8	4039	1.0	6.0	4.2	71M/4B	35.0	45.0	63.0	73.0	47.3	68	77	59	70	81	370-385
		1589.0	0.9	3478	1.3				35.0	45.0	63.0	73.0	47.3						
		1318.3	1.1	2885	1.5				35.0	45.0	63.0	73.0	47.3						
		1121.1	1.2	2454	2.1				35.0	45.0	63.0	73.0	47.3						
		1052.5	1.3	2304	2.3				35.0	45.0	63.0	73.0	47.3						
		907.3	1.5	1986	2.1				29.8	38.3	53.6	62.1	40.2						
		858.0	1.6	1878	2.7				29.8	38.3	53.6	62.1	40.2						
		805.5	1.7	1763	2.8				29.8	38.3	53.6	62.1	40.2						
	PL 5004	1845.3	1.5	2019	1.8	6.0	4.2	71M/2C	29.8	38.3	53.6	62.1	40.2	66	75	57	68	79	370-385
		1589.0	1.8	1739	2.3				29.8	38.3	53.6	62.1	40.2						
		1318.3	2.1	1443	2.7				29.8	38.3	53.6	62.1	40.2						

P1 (kW)		iges	n2 (rpm)	M2 (Nm)	fs	Pt (20°C) (kW)	Pt (40°C) (kW)	Motor IE2	FR (kN)					~ Kg					mm
									MC	MS	PC	PS	CPC	M...	P...	F	FS	CPC	
0.37	PL 2504	1121.1	0.8	3817	1.0	4.0	2.8	80M/6A	35.0	45.0	63.0	73.0	47.3	66	75	57	68	79	348-363
		1052.5	0.9	3583	1.1				35.0	45.0	63.0	73.0	47.3						
		907.3	1.0	3089	1.0				35.0	45.0	63.0	73.0	47.3						
		858.0	1.0	2921	1.3				35.0	45.0	63.0	73.0	47.3						
		805.5	1.1	2742	1.3				35.0	45.0	63.0	73.0	47.3						
		737.7	1.2	2512	1.6				35.0	45.0	63.0	73.0	47.3						
		668.2	1.3	2275	1.6				35.0	45.0	63.0	73.0	47.3						
		612.0	1.5	2084	1.9				35.0	45.0	63.0	73.0	47.3						
		554.4	1.6	1888	1.8				29.8	38.3	53.6	62.1	40.2						
		511.4	1.8	1741	1.9				29.8	38.3	53.6	62.1	40.2						
		468.4	1.9	1595	2.3				29.8	38.3	53.6	62.1	40.2						
		424.3	2.1	1445	2.3				29.8	38.3	53.6	62.1	40.2						
		413.9	2.2	1409	2.5				29.8	38.3	53.6	62.1	40.2						
		388.6	2.3	1323	2.7				29.8	38.3	53.6	62.1	40.2						
		365.8	2.5	1245	2.1				29.8	38.3	53.6	62.1	40.2						
		352.0	2.6	1198	2.6				27.1	34.9	48.8	56.6	36.6						
	PL 2504	1589.0	0.9	3478	0.9	4.0	2.8	71M/4B	35.0	45.0	63.0	73.0	47.3	62	71	53	64	75	348-363
		1318.3	1.1	2885	1.1				35.0	45.0	63.0	73.0	47.3						
		1121.1	1.2	2454	1.5				35.0	45.0	63.0	73.0	47.3						
		1052.5	1.3	2304	1.5				35.0	45.0	63.0	73.0	47.3						
		907.3	1.5	1986	1.5				29.8	38.3	53.6	62.1	40.2						
		858.0	1.6	1878	1.8				29.8	38.3	53.6	62.1	40.2						
		805.5	1.7	1763	1.9				29.8	38.3	53.6	62.1	40.2						
		737.7	1.9	1615	2.3				29.8	38.3	53.6	62.1	40.2						
		668.2	2.1	1462	2.2				29.8	38.3	53.6	62.1	40.2						
		612.0	2.3	1339	2.7				29.8	38.3	53.6	62.1	40.2						
		554.4	2.5	1213	2.6				27.1	34.9	48.8	56.6	36.6						
		511.4	2.7	1119	2.8				27.1	34.9	48.8	56.6	36.6						
		365.8	3.8	801	3.0				25.4	32.6	45.7	52.9	34.3						
	PL 2504	2369.2	1.2	2593	1.0	4.0	2.8	71M/2C	35.0	45.0	63.0	73.0	47.3	60	69	51	62	73	348-363
		1845.3	1.5	2019	1.2				29.8	38.3	53.6	62.1	40.2						
		1589.0	1.8	1739	1.6				29.8	38.3	53.6	62.1	40.2						
		1318.3	2.1	1443	1.9				29.8	38.3	53.6	62.1	40.2						
		1121.1	2.5	1227	2.6				29.8	38.3	53.6	62.1	40.2						
		1052.5	2.7	1152	2.8				27.1	34.9	48.8	56.6	36.6						
		907.3	3.1	993	2.6				27.1	34.9	48.8	56.6	36.6						
	PL 1604	1144.5	1.2	2505	0.8	1.5	1.1	71M/4B	11.0	13.5	24.0	30.0	18.0	48	50	46	49	53	326-340
		1093.5	1.3	2393	0.8				11.0	13.5	24.0	30.0	18.0						
		966.3	1.4	2115	0.9				11.0	13.5	24.0	30.0	18.0						
		907.2	1.5	1986	0.9				9.4	11.5	20.4	25.5	15.3						
		836.9	1.7	1832	1.0				9.4	11.5	20.4	25.5	15.3						
		752.6	1.9	1647	1.1				9.4	11.5	20.4	25.5	15.3						
		694.3	2.0	1520	1.1				9.4	11.5	20.4	25.5	15.3						
		624.4	2.2	1367	1.3				9.4	11.5	20.4	25.5	15.3						
		576.0	2.4	1261	1.3				9.4	11.5	20.4	25.5	15.3						
		531.3	2.6	1163	1.4				8.5	10.5	18.6	23.3	14.0						
		477.9	2.9	1046	1.6				8.5	10.5	18.6	23.3	14.0						
		440.8	3.2	965	1.7				8.5	10.5	18.6	23.3	14.0						
		396.4	3.5	868	1.8				8.0	9.8	17.4	21.8	13.1						
		365.7	3.8	800	1.9				8.0	9.8	17.4	21.8	13.1						
		337.4	4.1	738	2.1				8.0	9.8	17.4	21.8	13.1						
	PL 1604	694.3	1.3	2364	0.8	1.5	1.1	80M/6A	11.0	13.5	24.0	30.0	18.0	52	54	50	53	57	326-340
		624.4	1.4	2126	0.9				11.0	13.5	24.0	30.0	18.0						
		576.0	1.6	1961	0.9				9.4	11.5	20.4	25.5	15.3						
		531.3	1.7	1809	1.0				9.4	11.5	20.4	25.5	15.3						
		477.9	1.9	1627	1.1				9.4	11.5	20.4	25.5	15.3						
		440.8	2.0	1501	1.2				9.4	11.5	20.4	25.5	15.3						
		396.4	2.3	1350	1.3				9.4	11.5	20.4	25.5	15.3						
		365.7	2.5	1245	1.4				9.4	11.5	20.4	25.5	15.3						
		337.4	2.7	1149	1.5				8.5	10.5	18.6	23.3	14.0						
	PL 1604	1692.3	1.7	1852	1.0	1.5	1.1	71M/2C	9.4	11.5	20.4	25.5	15.3	46	48	44	47	51	326-340
		1428.8	2.0	1564	0.8				9.4	11.5	20.4	25.5	15.3						
		1318.1	2.1	1442	1.2				9.4	11.5	20.4	25.5	15.3						
		1185.4	2.4	1297	0.9				9.4	11.5	20.4	25.5	15.3						
		1144.5	2.4	1252	1.4				9.4	11.5	20.4	25.5	15.3						
		1093.5	2.6	1197	1.4				8.5	10.5	18.6	23.3	14.0						
		966.3	2.9	1057	1.6				8.5	10.5	18.6	23.3	14.0						
		907.2	3.1	993	1.6				8.5	10.5	18.6	23.3	14.0						
		836.9	3.3	916	1.7				8.5	10.5	18.6	23.3	14.0						
		752.6	3.7	824	1.9				8.0	9.8	17.4	21.8	13.1						
		694.3	4.0	760	2.0				8.0	9.8	17.4	21.8	13.1						
		624.4	4.5	683	2.2				8.0	9.8	17.4	21.8	13.1						
		576.0	4.9	630	2.4				7.4	9.1	16.2	20.3	12.2						
		531.3	5.3	581	2.5				7.4	9.1	16.2	20.3	12.2						
		477.9	5.9	523	2.8				6.6	8.1	14.4	18.0	10.8						
		440.8	6.4	482	3.0				6.6	8.1	14.4	18.0	10.8						

P1 (kW)		iges	n2 (rpm)	M2 (Nm)	fs	Pt (20°C) (kW)	Pt (40°C) (kW)	Motor IE2	FR (kN)					~ Kg					mm
									MC	MS	PC	PS	CPC	M...	P...	F	FS	CPC	
0.37	PL 1004	440.8	2.0	1501	0.8	1.5	1.1	80M/6A	9.4	11.5	20.4	25.5	15.3	50	52	48	51	55	304-318
		396.4	2.3	1350	0.8				9.4	11.5	20.4	25.5	15.3						
		365.7	2.5	1245	0.9				9.4	11.5	20.4	25.5	15.3						
		337.4	2.7	1149	0.9				8.5	10.5	18.6	23.3	14.0						
	PL 1004	1318.1	2.1	1442	0.8	1.5	1.1	71M/2C	9.4	11.5	20.4	25.5	15.3	44	46	42	45	49	304-318
		1144.5	2.4	1252	0.9				9.4	11.5	20.4	25.5	15.3						
		1093.5	2.6	1197	0.9				8.5	10.5	18.6	23.3	14.0						
		966.3	2.9	1057	1.0				8.5	10.5	18.6	23.3	14.0						
		907.2	3.1	993	1.1				8.5	10.5	18.6	23.3	14.0						
		836.9	3.3	916	1.1				8.5	10.5	18.6	23.3	14.0						
		752.6	3.7	824	1.2				8.0	9.8	17.4	21.8	13.1						
		694.3	4.0	760	1.3				8.0	9.8	17.4	21.8	13.1						
		624.4	4.5	683	1.4				8.0	9.8	17.4	21.8	13.1						
		576.0	4.9	630	1.5				7.4	9.1	16.2	20.3	12.2						
		531.3	5.3	581	1.6				7.4	9.1	16.2	20.3	12.2						
		477.9	5.9	523	1.8				6.6	8.1	14.4	18.0	10.8						
		440.8	6.4	482	1.9				6.6	8.1	14.4	18.0	10.8						
		396.4	7.1	434	2.1				6.3	7.8	13.8	17.3	10.4						
		365.7	7.7	400	2.3				6.1	7.4	13.2	16.5	9.9						
		337.4	8.3	369	2.4				6.1	7.4	13.2	16.5	9.9						
	PL 1004	624.4	2.2	1367	0.8	1.5	1.1	71M/4B	9.4	11.5	20.4	25.5	15.3	46	48	44	47	51	304-318
		576.0	2.4	1261	0.9				9.4	11.5	20.4	25.5	15.3						
		531.3	2.6	1163	0.9				8.5	10.5	18.6	23.3	14.0						
		477.9	2.9	1046	1.0				8.5	10.5	18.6	23.3	14.0						
		440.8	3.2	965	1.1				8.5	10.5	18.6	23.3	14.0						
		396.4	3.5	868	1.2				8.0	9.8	17.4	21.8	13.1						
		365.7	3.8	800	1.3				8.0	9.8	17.4	21.8	13.1						
		337.4	4.1	738	1.4				8.0	9.8	17.4	21.8	13.1						
	PL 5003	330.3	2.7	1165	2.2	10.0	7.0	80M/6A	27.1	34.9	48.8	56.6	36.6	66	75	57	68	79	370-385
	PL 2503	424.1	2.1	1496	1.2	8.0	5.6	80M/6A	29.8	38.3	53.6	62.1	40.2	60	69	51	62	73	348-363
		330.3	2.7	1165	1.5				27.1	34.9	48.8	56.6	36.6						
		302.2	3.0	1066	2.4				27.1	34.9	48.8	56.6	36.6						
		273.4	3.3	965	2.2				27.1	34.9	48.8	56.6	36.6						
		235.4	3.8	831	2.9				25.4	32.6	45.7	52.9	34.3						
	PL 2503	424.1	3.3	962	1.2	8.0	5.6	71M/4B	27.1	34.9	48.8	56.6	36.6	56	65	47	58	69	348-363
		330.3	4.2	749	2.1				25.4	32.6	45.7	52.9	34.3						
	PL 2503	424.1	6.6	481	3.0	8.0	5.6	71M/2C	20.1	25.9	36.2	42.0	27.2	54	63	45	56	67	348-363
	PL 1603	327.6	2.7	1156	1.0	5.0	3.5	80M/6A	8.5	10.5	18.6	23.3	14.0	46	48	44	47	51	326-340
		307.5	2.9	1085	0.9				8.5	10.5	18.6	23.3	14.0						
		271.8	3.3	959	1.2				8.5	10.5	18.6	23.3	14.0						
		255.2	3.5	900	1.2				8.0	9.8	17.4	21.8	13.1						
		211.7	4.3	747	1.5				8.0	9.8	17.4	21.8	13.1						
		208.0	4.3	734	2.1				8.0	9.8	17.4	21.8	13.1						
		172.6	5.2	609	2.4				7.4	9.1	16.2	20.3	12.2						
		162.0	5.6	572	2.6				6.6	8.1	14.4	18.0	10.8						
		134.4	6.7	474	3.0				6.3	7.8	13.8	17.3	10.4						
	PL 1603	394.9	3.5	896	1.0	5.0	3.5	71M/4B	8.0	9.8	17.4	21.8	13.1	42	44	40	43	47	326-340
		327.6	4.3	743	1.5				8.0	9.8	17.4	21.8	13.1						
		307.5	4.6	697	1.3				7.4	9.1	16.2	20.3	12.2						
		271.8	5.2	616	1.7				7.4	9.1	16.2	20.3	12.2						
		255.2	5.5	579	1.8				7.4	9.1	16.2	20.3	12.2						
		211.7	6.6	480	2.1				6.3	7.8	13.8	17.3	10.4						
	PL 1603	394.9	7.1	448	1.9	5.0	3.5	71M/2C	6.3	7.8	13.8	17.3	10.4	40	42	38	41	45	326-340
		327.6	8.5	372	2.6				5.8	7.1	12.6	15.8	9.5						
		307.5	9.1	349	2.3				5.8	7.1	12.6	15.8	9.5						
	PL 1003	271.8	3.3	959	0.8	5.0	3.5	80M/6A	8.5	10.5	18.6	23.3	14.0	44	46	42	45	49	304-318
		255.2	3.5	900	0.8				8.0	9.8	17.4	21.8	13.1						
		211.7	4.3	747	1.0				8.0	9.8	17.4	21.8	13.1						
		208.0	4.3	734	1.4				8.0	9.8	17.4	21.8	13.1						
		172.6	5.2	609	1.6				7.4	9.1	16.2	20.3	12.2						
		162.0	5.6	572	1.7				6.6	8.1	14.4	18.0	10.8						
		134.4	6.7	474	1.9				6.3	7.8	13.8	17.3	10.4						
		111.5	8.1	393	2.3				6.1	7.4	13.2	16.5	9.9						
		102.9	8.7	363	2.4				5.8	7.1	12.6	15.8	9.5						
		85.3	10.6	301	2.9				5.5	6.8	12.0	15.0	9.0						

P1 (kW)		iges	n2 (rpm)	M2 (Nm)	fs	Pt (20°C) (kW)	Pt (40°C) (kW)	Motor IE2	FR (kN)					~ Kg					mm
									MC	MS	PC	PS	CPC	M...	P...	F	FS	CPC	
0.37	PL 1003	327.6	4.3	743	1.0	5.0	3.5	71M/4B	8.0	9.8	17.4	21.8	13.1	40	42	38	41	45	304-318
		307.5	4.6	697	0.9				7.4	9.1	16.2	20.3	12.2						
		271.8	5.2	616	1.1				7.4	9.1	16.2	20.3	12.2						
		255.2	5.5	579	1.2				7.4	9.1	16.2	20.3	12.2						
		211.7	6.6	480	1.4				6.3	7.8	13.8	17.3	10.4						
		208.0	6.7	472	2.0				6.3	7.8	13.8	17.3	10.4						
		172.6	8.1	391	2.3				6.1	7.4	13.2	16.5	9.9						
		162.0	8.6	367	2.4				5.8	7.1	12.6	15.8	9.5						
		134.4	10.4	305	2.8				5.5	6.8	12.0	15.0	9.0						
	PL 1003	394.9	7.1	448	1.3	5.0	3.5	71M/2C	6.3	7.8	13.8	17.3	10.4	38	40	36	39	43	304-318
		327.6	8.5	372	1.7				5.8	7.1	12.6	15.8	9.5						
		307.5	9.1	349	1.6				5.8	7.1	12.6	15.8	9.5						
		271.8	10.3	308	2.0				5.5	6.8	12.0	15.0	9.0						
		255.2	11.0	289	2.2				5.5	6.8	12.0	15.0	9.0						
		211.7	13.2	240	2.5				5.2	6.3	11.3	14.1	8.5						
	PL 1002	58.5	15.4	214	2.4	8.0	5.6	80M/6A	5.2	6.3	11.3	14.1	8.5	38	40	36	39	43	304-318
		45.6	19.7	167	2.9				4.6	5.6	10.0	12.5	7.5						
	PL 16004	2229.7	0.4	5129	2.5	11.0	7.7	71M/6B	60.0	106.0	140.0	186.0	45.0	152	179	121	157	202	428-445
0.55	PL 25004	1774.0	0.5	8978	2.7	15.0	10.5	80M/6B	90.0	137.0	-	-	67.5	249	-	213	221	310	476-489
		1529.3	0.6	7740	3.0				90.0	137.0	-	-	67.5						
	PL 16004	2229.7	0.4	11284	1.1	11.0	7.7	80M/6B	60.0	106.0	140.0	186.0	45.0	156	183	125	161	206	428-445
		1849.8	0.5	9362	1.7				60.0	106.0	140.0	186.0	45.0						
		1530.9	0.6	7748	2.0				60.0	106.0	140.0	186.0	45.0						
		1270.1	0.7	6428	2.3				60.0	106.0	140.0	186.0	45.0						
		1093.7	0.8	5535	2.6				60.0	106.0	140.0	186.0	45.0						
	PL 16004	2229.7	0.6	7254	1.6	11.0	7.7	80M/4B	60.0	106.0	140.0	186.0	45.0	156	183	125	161	206	428-445
		1849.8	0.8	6018	2.5				60.0	106.0	140.0	186.0	45.0						
		1530.9	0.9	4981	2.9				60.0	106.0	140.0	186.0	45.0						
	PL 16004	2229.7	1.3	3627	2.8	11.0	7.7	71M/2D	60.0	106.0	140.0	186.0	45.0	150	177	119	155	200	428-445
	PL 10004	2229.7	0.4	11284	0.8	11.0	7.7	80M/6B	65.0	95.0	-	-	48.8	148	-	115	153	198	410-421
		1849.8	0.5	9362	1.2				65.0	95.0	-	-	48.8						
		1530.9	0.6	7748	1.3				65.0	95.0	-	-	48.8						
		1270.1	0.7	6428	1.6				65.0	95.0	-	-	48.8						
		1093.7	0.8	5535	1.8				65.0	95.0	-	-	48.8						
		1008.9	0.9	5106	2.5				65.0	95.0	-	-	48.8						
		907.3	1.0	4592	2.1				65.0	95.0	-	-	48.8						
		806.4	1.1	4081	2.3				65.0	95.0	-	-	48.8						
		724.4	1.2	3666	2.5				65.0	95.0	-	-	48.8						
		576.1	1.6	2916	3.0				55.3	80.8	-	-	41.4						
	PL 10004	2229.7	0.6	7254	1.1	11.0	7.7	80M/4B	65.0	95.0	-	-	48.8	148	-	115	153	198	410-421
		1849.8	0.8	6018	1.7				65.0	95.0	-	-	48.8						
		1530.9	0.9	4981	2.0				65.0	95.0	-	-	48.8						
		1270.1	1.1	4132	2.3				65.0	95.0	-	-	48.8						
		1093.7	1.3	3558	2.6				65.0	95.0	-	-	48.8						
		907.3	1.5	2952	3.0				55.3	80.8	-	-	41.4						
	PL 10004	2229.7	1.3	3627	1.9	11.0	7.7	71M/2D	65.0	95.0	-	-	48.8	142	-	109	147	192	410-421
		1849.8	1.5	3009	3.0				55.3	80.8	-	-	41.4						
	PL 7004	1651.6	0.5	8359	0.9	8.0	5.6	80M/6B	-	-	115.0	138.0	86.3	-	111	93	114	128	392-400
		1366.9	0.7	6918	1.0				-	-	115.0	138.0	86.3						
		1177.0	0.8	5957	1.2				-	-	115.0	138.0	86.3						
		1048.7	0.9	5307	1.3				-	-	115.0	138.0	86.3						
		976.5	0.9	4942	1.4				-	-	115.0	138.0	86.3						
		870.0	1.0	4403	1.5				-	-	115.0	138.0	86.3						
		832.3	1.1	4212	1.8				-	-	115.0	138.0	86.3						
		768.7	1.2	3890	1.9				-	-	115.0	138.0	86.3						
		747.3	1.2	3782	1.7				-	-	115.0	138.0	86.3						
		661.9	1.4	3350	2.1				-	-	115.0	138.0	86.3						
		632.4	1.4	3201	2.2				-	-	115.0	138.0	86.3						
		571.7	1.6	2893	2.6				-	-	97.8	117.3	73.3						
		523.6	1.7	2650	2.8				-	-	97.8	117.3	73.3						
		474.3	1.9	2400	3.0				-	-	97.8	117.3	73.3						
	PL 7004	1651.6	0.8	5373	1.3	8.0	5.6	80M/4B	-	-	115.0	138.0	86.3	-	111	93	114	128	392-400
		1366.9	1.0	4447	1.5				-	-	115.0	138.0	86.3						
		1177.0	1.2	3829	1.7				-	-	115.0	138.0	86.3						
		1048.7	1.3	3412	1.8				-	-	115.0	138.0	86.3						
		976.5	1.4	3177	1.9				-	-	115.0	138.0	86.3						
		870.0	1.6	2831	2.1				-	-	97.8	117.3	73.3						
		832.3	1.7	2708	2.5				-	-	97.8	117.3	73.3						
		768.7	1.8	2501	2.7				-	-	97.8	117.3	73.3						
		747.3	1.9	2431	2.4				-	-	97.8	117.3	73.3						

P1 (kW)		iges	n2 (rpm)	M2 (Nm)	fs	Pt (20°C) (kW)	Pt (40°C) (kW)	Motor IE2	FR (kN)					~ Kg					mm
									MC	MS	PC	PS	CPC	M...	P...	F	FS	CPC	
0.55	PL 7004	2968.9	0.9	4830	1.0	8.0	5.6	71M/2D	-	-	115.0	138.0	86.3	-	105	87	108	122	392-400
		1651.6	1.7	2687	2.2				-	-	97.8	117.3	73.3						
		1366.9	2.0	2224	2.6				-	-	97.8	117.3	73.3						
		1177.0	2.4	1915	2.9				-	-	97.8	117.3	73.3						
	PL 5004	1121.1	0.8	5674	1.0	6.0	4.2	80M/6B	35.0	45.0	63.0	73.0	47.3	73	82	64	75	86	370-385
		1052.5	0.9	5327	1.1				35.0	45.0	63.0	73.0	47.3						
		907.3	1.0	4592	1.0				35.0	45.0	63.0	73.0	47.3						
		858.0	1.0	4342	1.3				35.0	45.0	63.0	73.0	47.3						
		805.5	1.1	4077	1.3				35.0	45.0	63.0	73.0	47.3						
		737.7	1.2	3733	1.5				35.0	45.0	63.0	73.0	47.3						
		668.2	1.3	3382	1.5				35.0	45.0	63.0	73.0	47.3						
		612.0	1.5	3097	1.8				35.0	45.0	63.0	73.0	47.3						
		554.4	1.6	2806	1.8				29.8	38.3	53.6	62.1	40.2						
		511.4	1.8	2588	1.9				29.8	38.3	53.6	62.1	40.2						
		468.4	1.9	2371	2.2				29.8	38.3	53.6	62.1	40.2						
		424.3	2.1	2147	2.2				29.8	38.3	53.6	62.1	40.2						
		413.9	2.2	2095	2.5				29.8	38.3	53.6	62.1	40.2						
		388.6	2.3	1967	2.6				29.8	38.3	53.6	62.1	40.2						
		365.8	2.5	1851	2.0				29.8	38.3	53.6	62.1	40.2						
		352.0	2.6	1781	2.6				27.1	34.9	48.8	56.6	36.6						
	PL 5004	1589.0	0.9	5170	0.9	6.0	4.2	80M/4B	35.0	45.0	63.0	73.0	47.3	73	82	64	75	86	370-385
		1318.3	1.1	4289	1.0				35.0	45.0	63.0	73.0	47.3						
		1121.1	1.2	3647	1.4				35.0	45.0	63.0	73.0	47.3						
		1052.5	1.3	3424	1.5				35.0	45.0	63.0	73.0	47.3						
		907.3	1.5	2952	1.4				29.8	38.3	53.6	62.1	40.2						
		858.0	1.6	2791	1.8				29.8	38.3	53.6	62.1	40.2						
		805.5	1.7	2621	1.9				29.8	38.3	53.6	62.1	40.2						
		737.7	1.9	2400	2.2				29.8	38.3	53.6	62.1	40.2						
		668.2	2.1	2174	2.2				29.8	38.3	53.6	62.1	40.2						
		612.0	2.3	1991	2.6				29.8	38.3	53.6	62.1	40.2						
		554.4	2.5	1804	2.6				27.1	34.9	48.8	56.6	36.6						
		511.4	2.7	1664	2.8				27.1	34.9	48.8	56.6	36.6						
		365.8	3.8	1190	2.9				25.4	32.6	45.7	52.9	34.3						
	PL 5004	1845.3	1.5	3002	1.2	6.0	4.2	71M/2D	29.8	38.3	53.6	62.1	40.2	67	76	58	69	80	370-385
		1589.0	1.8	2585	1.6				29.8	38.3	53.6	62.1	40.2						
		1318.3	2.1	2145	1.8				29.8	38.3	53.6	62.1	40.2						
		1121.1	2.5	1824	2.6				29.8	38.3	53.6	62.1	40.2						
		1052.5	2.7	1712	2.7				27.1	34.9	48.8	56.6	36.6						
		907.3	3.1	1476	2.5				27.1	34.9	48.8	56.6	36.6						
	PL 2504	858.0	1.0	4342	0.9	4.0	2.8	80M/6B	35.0	45.0	63.0	73.0	47.3	67	76	58	69	80	348-363
		805.5	1.1	4077	0.9				35.0	45.0	63.0	73.0	47.3						
		737.7	1.2	3733	1.1				35.0	45.0	63.0	73.0	47.3						
		668.2	1.3	3382	1.0				35.0	45.0	63.0	73.0	47.3						
		612.0	1.5	3097	1.2				35.0	45.0	63.0	73.0	47.3						
		554.4	1.6	2806	1.2				29.8	38.3	53.6	62.1	40.2						
		511.4	1.8	2588	1.3				29.8	38.3	53.6	62.1	40.2						
		468.4	1.9	2371	1.5				29.8	38.3	53.6	62.1	40.2						
		424.3	2.1	2147	1.5				29.8	38.3	53.6	62.1	40.2						
		413.9	2.2	2095	1.7				29.8	38.3	53.6	62.1	40.2						
		388.6	2.3	1967	1.8				29.8	38.3	53.6	62.1	40.2						
		365.8	2.5	1851	1.4				29.8	38.3	53.6	62.1	40.2						
		352.0	2.6	1781	1.8				27.1	34.9	48.8	56.6	36.6						
	PL 2504	1121.1	1.2	3647	1.0	4.0	2.8	80M/4B	35.0	45.0	63.0	73.0	47.3	67	76	58	69	80	348-363
		1052.5	1.3	3424	1.0				35.0	45.0	63.0	73.0	47.3						
		907.3	1.5	2952	1.0				29.8	38.3	53.6	62.1	40.2						
		858.0	1.6	2791	1.2				29.8	38.3	53.6	62.1	40.2						
		805.5	1.7	2621	1.3				29.8	38.3	53.6	62.1	40.2						
		737.7	1.9	2400	1.5				29.8	38.3	53.6	62.1	40.2						
		668.2	2.1	2174	1.5				29.8	38.3	53.6	62.1	40.2						
		612.0	2.3	1991	1.8				29.8	38.3	53.6	62.1	40.2						
		554.4	2.5	1804	1.8				27.1	34.9	48.8	56.6	36.6						
		511.4	2.7	1664	1.9				27.1	34.9	48.8	56.6	36.6						
		468.4	3.0	1524	2.2				27.1	34.9	48.8	56.6	36.6						
		424.3	3.3	1380	2.2				27.1	34.9	48.8	56.6	36.6						
		413.9	3.4	1347	2.5				27.1	34.9	48.8	56.6	36.6						
		388.6	3.6	1264	2.6				25.4	32.6	45.7	52.9	34.3						
		365.8	3.8	1190	2.0				25.4	32.6	45.7	52.9	34.3						
		352.0	4.0	1145	2.6				25.4	32.6	45.7	52.9	34.3						

P1 (kW)		iges	n2 (rpm)	M2 (Nm)	fs	Pt (20°C) (kW)	Pt (40°C) (kW)	Motor IE2	FR (kN)					~ Kg					mm
									MC	MS	PC	PS	CPC	M...	P...	F	FS	CPC	
0.55	PL 2504	1845.3	1.5	3002	0.8	4.0	2.8	71M/2D	29.8	38.3	53.6	62.1	40.2	61	70	52	63	74	348-363
		1589.0	1.8	2585	1.1				29.8	38.3	53.6	62.1	40.2						
		1318.3	2.1	2145	1.3				29.8	38.3	53.6	62.1	40.2						
		1121.1	2.5	1824	1.7				29.8	38.3	53.6	62.1	40.2						
		1052.5	2.7	1712	1.9				27.1	34.9	48.8	56.6	36.6						
		907.3	3.1	1476	1.7				27.1	34.9	48.8	56.6	36.6						
		858.0	3.3	1396	2.2				27.1	34.9	48.8	56.6	36.6						
		805.5	3.5	1310	2.3				27.1	34.9	48.8	56.6	36.6						
		737.7	3.8	1200	2.7				25.4	32.6	45.7	52.9	34.3						
		668.2	4.2	1087	2.7				25.4	32.6	45.7	52.9	34.3						
	PL 1604	440.8	2.0	2231	0.8	1.5	1.1	80M/6B	9.4	11.5	20.4	25.5	15.3	53	55	51	54	58	326-340
		396.4	2.3	2006	0.9				9.4	11.5	20.4	25.5	15.3						
		365.7	2.5	1851	0.9				9.4	11.5	20.4	25.5	15.3						
		337.4	2.7	1708	1.0				8.5	10.5	18.6	23.3	14.0						
	PL 1604	694.3	2.0	2259	0.8	1.5	1.1	80M/4B	9.4	11.5	20.4	25.5	15.3	53	55	51	54	58	326-340
		624.4	2.2	2031	0.9				9.4	11.5	20.4	25.5	15.3						
		576.0	2.4	1874	0.9				9.4	11.5	20.4	25.5	15.3						
		531.3	2.6	1729	1.0				8.5	10.5	18.6	23.3	14.0						
		477.9	2.9	1555	1.1				8.5	10.5	18.6	23.3	14.0						
		440.8	3.2	1434	1.1				8.5	10.5	18.6	23.3	14.0						
		396.4	3.5	1290	1.2				8.0	9.8	17.4	21.8	13.1						
		365.7	3.8	1190	1.3				8.0	9.8	17.4	21.8	13.1						
		337.4	4.1	1098	1.4				8.0	9.8	17.4	21.8	13.1						
	PL 1604	1318.1	2.1	2144	0.8	1.5	1.1	71M/2D	9.4	11.5	20.4	25.5	15.3	47	49	45	48	52	326-340
		1144.5	2.4	1862	0.9				9.4	11.5	20.4	25.5	15.3						
		1093.5	2.6	1779	0.9				8.5	10.5	18.6	23.3	14.0						
		966.3	2.9	1572	1.1				8.5	10.5	18.6	23.3	14.0						
		907.2	3.1	1476	1.1				8.5	10.5	18.6	23.3	14.0						
		836.9	3.3	1361	1.2				8.5	10.5	18.6	23.3	14.0						
		752.6	3.7	1224	1.3				8.0	9.8	17.4	21.8	13.1						
		694.3	4.0	1129	1.4				8.0	9.8	17.4	21.8	13.1						
		624.4	4.5	1016	1.5				8.0	9.8	17.4	21.8	13.1						
		576.0	4.9	937	1.6				7.4	9.1	16.2	20.3	12.2						
		531.3	5.3	864	1.7				7.4	9.1	16.2	20.3	12.2						
		477.9	5.9	777	1.9				6.6	8.1	14.4	18.0	10.8						
		440.8	6.4	717	2.0				6.6	8.1	14.4	18.0	10.8						
		396.4	7.1	645	2.2				6.3	7.8	13.8	17.3	10.4						
		365.7	7.7	595	2.3				6.1	7.4	13.2	16.5	9.9						
		337.4	8.3	549	2.5				6.1	7.4	13.2	16.5	9.9						
	PL 1004	836.9	3.3	1361	0.8	1.5	1.1	71M/2D	8.5	10.5	18.6	23.3	14.0	45	47	43	46	50	304-318
		752.6	3.7	1224	0.8				8.0	9.8	17.4	21.8	13.1						
		694.3	4.0	1129	0.9				8.0	9.8	17.4	21.8	13.1						
		624.4	4.5	1016	1.0				8.0	9.8	17.4	21.8	13.1						
		576.0	4.9	937	1.0				7.4	9.1	16.2	20.3	12.2						
		531.3	5.3	864	1.1				7.4	9.1	16.2	20.3	12.2						
		477.9	5.9	777	1.2				6.6	8.1	14.4	18.0	10.8						
		440.8	6.4	717	1.3				6.6	8.1	14.4	18.0	10.8						
		396.4	7.1	645	1.4				6.3	7.8	13.8	17.3	10.4						
		365.7	7.7	595	1.5				6.1	7.4	13.2	16.5	9.9						
		337.4	8.3	549	1.6				6.1	7.4	13.2	16.5	9.9						
	PL 1004	396.4	3.5	1290	0.8	1.5	1.1	80M/4B	8.0	9.8	17.4	21.8	13.1	51	53	49	52	56	304-318
		365.7	3.8	1190	0.8				8.0	9.8	17.4	21.8	13.1						
		337.4	4.1	1098	0.9				8.0	9.8	17.4	21.8	13.1						
	PL 7003	342.6	2.6	1797	2.1	14.0	9.8	80M/6B	-	-	89.1	107.0	66.8	-	105	87	108	122	392-400
	PL 5003	330.3	2.7	1732	1.5	10.0	7.0	80M/6B	27.1	34.9	48.8	56.6	36.6	67	76	58	69	80	370-385
		302.2	3.0	1585	2.3				27.1	34.9	48.8	56.6	36.6						
		273.4	3.3	1434	2.2				27.1	34.9	48.8	56.6	36.6						
		235.4	3.8	1235	2.8				25.4	32.6	45.7	52.9	34.3						
	PL 5003	330.3	4.2	1114	2.1	10.0	7.0	80M/4B	25.4	32.6	45.7	52.9	34.3	67	76	58	69	80	370-385
	PL 2503	424.1	2.1	2224	0.8	8.0	5.6	80M/6B	29.8	38.3	53.6	62.1	40.2	61	70	52	63	74	348-363
		330.3	2.7	1732	1.0				27.1	34.9	48.8	56.6	36.6						
		302.2	3.0	1585	1.6				27.1	34.9	48.8	56.6	36.6						
		273.4	3.3	1434	1.5				27.1	34.9	48.8	56.6	36.6						
		235.4	3.8	1235	2.0				25.4	32.6	45.7	52.9	34.3						
		195.3	4.6	1024	2.3				23.6	30.4	42.5	49.3	31.9						
		173.6	5.2	910	2.1				23.6	30.4	42.5	49.3	31.9						
		162.0	5.6	850	2.7				21.0	27.0	37.8	43.8	28.4						
		149.5	6.0	784	2.9				21.0	27.0	37.8	43.8	28.4						
	PL 2503	424.1	3.3	1430	0.8	8.0	5.6	80M/4B	27.1	34.9	48.8	56.6	36.6	61	70	52	63	74	348-363
		330.3	4.2	1114	1.4				25.4	32.6	45.7	52.9	34.3						
		302.2	4.6	1019	2.3				23.6	30.4	42.5	49.3	31.9						
		273.4	5.1	922	2.1				23.6	30.4	42.5	49.3	31.9						
		235.4	5.9	794	2.9				21.0	27.0	37.8	43.8	28.4						

P1 (kW)	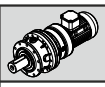	iges	n2 (rpm)	M2 (Nm)	fs	Pt (20°C) (kW)	Pt (40°C) (kW)	Motor IE2	FR (kN) MC	MS	PC	PS	CPC	~ Kg M…	P…	F	FS	CPC	mm
0.55	PL 2503	424.1 330.3	6.6 8.5	715 557	2.0 2.5	8.0	5.6	71M/2D	20.1 19.3	25.9 24.8	36.2 34.7	42.0 40.2	27.2 26.0	55	64	46	57	68	348-363
	PL 1603	271.8 255.2 211.7 208.0 172.6 162.0 134.4 111.5 102.9 85.3	3.3 3.5 4.3 4.3 5.2 5.6 6.7 8.1 8.7 10.6	1425 1338 1110 1091 905 850 705 585 540 447	0.8 0.8 1.0 1.4 1.6 1.7 2.0 2.4 2.5 3.0	5.0	3.5	80M/6B	8.5 8.0 8.0 8.0 7.4 6.6 6.3 6.1 5.8 5.5	10.5 9.8 9.8 9.8 9.1 8.1 7.8 7.4 7.1 6.8	18.6 17.4 17.4 17.4 16.2 14.4 13.8 13.2 12.6 12.0	23.3 21.8 21.8 21.8 20.3 18.0 17.3 16.5 15.8 15.0	14.0 13.1 13.1 13.1 12.2 10.8 10.4 9.9 9.5 9.0	47	49	45	48	52	326-340
	PL 1603	327.6 307.5 271.8 255.2 211.7 208.0 172.6 162.0 134.4	4.3 4.6 5.2 5.5 6.6 6.7 8.1 8.6 10.4	1104 1037 916 860 714 701 582 546 453	1.0 0.9 1.1 1.2 1.4 2.1 2.4 2.5 2.9	5.0	3.5	80M/4B	8.0 7.4 7.4 7.4 6.3 6.3 6.1 5.8 5.5	9.8 9.1 9.1 9.1 7.8 7.8 7.4 7.1 6.8	17.4 16.2 16.2 16.2 13.8 13.8 13.2 12.6 12.0	21.8 20.3 20.3 20.3 17.3 17.3 16.5 15.8 15.0	13.1 12.2 12.2 12.2 10.4 10.4 9.9 9.5 9.0	47	49	45	48	52	326-340
	PL 1603	394.9 327.6 307.5 271.8 255.2 211.7	7.1 8.5 9.1 10.3 11.0 13.2	666 552 518 458 430 357	1.3 1.8 1.5 2.1 2.2 2.6	5.0	3.5	71M/2D	6.3 5.8 5.8 5.5 5.5 5.2	7.8 7.1 7.1 6.8 6.8 6.3	13.8 12.6 12.6 12.0 12.0 11.3	17.3 15.8 15.8 15.0 15.0 14.1	10.4 9.5 9.5 9.0 9.0 8.5	41	43	39	42	46	326-340
	PL 1003	208.0 172.6 162.0 134.4 111.5 102.9 85.3 78.7 70.8 65.3 54.2	4.3 5.2 5.6 6.7 8.1 8.7 10.6 11.4 12.7 13.8 16.6	1091 905 850 705 585 540 447 413 371 342 284	0.9 1.1 1.1 1.3 1.5 1.6 1.9 2.1 2.2 2.4 2.8	5.0	3.5	80M/6B	8.0 7.4 6.6 6.3 6.1 5.8 5.5 5.5 5.2 5.2 5.2	9.8 9.1 8.1 7.8 7.4 7.1 6.8 6.8 6.3 6.3 6.3	17.4 16.2 14.4 13.8 13.2 12.6 12.0 12.0 11.3 11.3 11.3	21.8 20.3 18.0 17.3 16.5 15.8 15.0 15.0 14.1 14.1 14.1	13.1 12.2 10.8 10.4 9.9 9.5 9.0 9.0 8.5 8.5 8.5	45	47	43	46	50	304-318
	PL 1003	271.8 255.2 211.7 208.0 172.6 162.0 134.4 111.5 102.9 85.3 78.7	5.2 5.5 6.6 6.7 8.1 8.6 10.4 12.6 13.6 16.4 17.8	916 860 714 701 582 546 453 376 347 288 265	0.8 0.8 1.0 1.3 1.5 1.6 1.9 2.2 2.4 2.8 3.0	5.0	3.5	80M/4B	7.4 7.4 6.3 6.3 6.1 5.8 5.5 5.3 5.3 5.2 4.9	9.1 9.1 7.8 7.8 7.4 7.1 6.8 6.5 6.5 6.3 6.0	16.2 16.2 13.8 13.8 13.2 12.6 12.0 11.6 11.6 11.3 10.7	20.3 20.3 17.3 17.3 16.5 15.8 15.0 14.6 14.6 14.1 13.4	12.2 12.2 10.4 10.4 9.9 9.5 9.0 8.7 8.7 8.5 8.0	45	47	43	46	50	304-318
	PL 1003	394.9 327.6 307.5 271.8 255.2 211.7 208.0 172.6 162.0	7.1 8.5 9.1 10.3 11.0 13.2 13.5 16.2 17.3	666 552 518 458 430 357 351 291 273	0.9 1.2 1.1 1.4 1.5 1.7 2.3 2.8 2.9	5.0	3.5	71M/2D	6.3 5.8 5.8 5.5 5.5 5.2 5.2 5.2 5.2	7.8 7.1 7.1 6.8 6.8 6.3 6.3 6.3 6.3	13.8 12.6 12.6 12.0 12.0 11.3 11.3 11.3 11.3	17.3 15.8 15.8 15.0 15.0 14.1 14.1 14.1 14.1	10.4 9.5 9.5 9.0 9.0 8.5 8.5 8.5 8.5	39	41	37	40	44	304-318
	PL 1602	58.5 45.6	15.4 19.7	318 248	2.3 2.8	8.0	5.6	80M/6B	5.2 4.6	5.6 5.3	11.3 10.0	14.1 12.5	8.5 7.5	41	43	39	42	46	326-340
	PL 1002	58.5 45.6 37.8	15.4 19.7 23.8	318 248 205	1.6 2.0 2.6	8.0	5.6	80M/6B	5.2 4.6 4.3	6.3 5.6 5.3	11.3 10.0 9.4	14.1 12.5 11.7	8.5 7.5 7.0	39	41	37	40	44	304-318
	PL 1002	58.5 45.6	23.9 30.7	204 159	2.3 2.9	8.0	5.6	80M/4B	4.3 4.1	5.3 5.0	9.4 8.9	11.7 11.1	7.0 6.7	39	41	37	40	44	304-318
0.75	PL 25004	1774.0 1529.3 1476.0 1354.5	0.5 0.6 0.6 0.7	12243 10554 10186 9348	2.0 2.2 3.0 2.5	15.0	10.5	90L/6C	90.0 90.0 90.0 90.0	137.0 137.0 137.0 137.0	- - - -	- - - -	67.5 67.5 67.5 67.5	255	-	219	227	316	476-489
	PL 25004	1774.0	0.8	7870	2.9	15.0	10.5	80M/4D	90.0	137.0	-	-	67.5	250	-	214	222	311	476-489

P1 (kW)	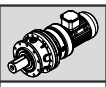	iges	n2 (rpm)	M2 (Nm)	fs	Pt (20°C) (kW)	Pt (40°C) (kW)	Motor IE2	FR (kN)					~ Kg					mm
									MC	MS	PC	PS	CPC	M...	P...	F	FS	CPC	
0.75	PL 18004	1216.4	0.7	8395	2.3	13.0	9.1	90L/6C	60.0	106.0	140.0	186.0	45.0	176	203	145	181	226	452-469
		1113.0	0.8	7681	2.5				60.0	106.0	140.0	186.0	45.0						
		987.4	0.9	6814	2.8				60.0	106.0	140.0	186.0	45.0						
		928.8	1.0	6410	2.9				60.0	106.0	140.0	186.0	45.0						
	PL 16004	2229.7	0.4	15388	0.8	11.0	7.7	90L/6C	60.0	106.0	140.0	186.0	45.0	162	189	131	167	212	428-445
		1849.8	0.5	12766	1.2				60.0	106.0	140.0	186.0	45.0						
		1530.9	0.6	10565	1.4				60.0	106.0	140.0	186.0	45.0						
		1270.1	0.7	8765	1.7				60.0	106.0	140.0	186.0	45.0						
		1093.7	0.8	7548	1.9				60.0	106.0	140.0	186.0	45.0						
		1008.9	0.9	6963	2.7				60.0	106.0	140.0	186.0	45.0						
		907.3	1.0	6262	2.3				60.0	106.0	140.0	186.0	45.0						
		806.4	1.1	5565	2.5				60.0	106.0	140.0	186.0	45.0						
		724.4	1.2	4999	2.7				60.0	106.0	140.0	186.0	45.0						
	PL 16004	2229.7	0.6	9892	1.2	11.0	7.7	80M/4D	60.0	106.0	140.0	186.0	45.0	157	184	126	162	207	428-445
		1849.8	0.8	8207	1.8				60.0	106.0	140.0	186.0	45.0						
		1530.9	0.9	6792	2.1				60.0	106.0	140.0	186.0	45.0						
		1270.1	1.1	5635	2.5				60.0	106.0	140.0	186.0	45.0						
		1093.7	1.3	4852	2.8				60.0	106.0	140.0	186.0	45.0						
	PL 16004	2229.7	1.3	4946	2.1	11.0	7.7	80M/2B	60.0	106.0	140.0	186.0	45.0	155	182	124	160	205	428-445
	PL 10004	1849.8	0.5	12766	0.8	11.0	7.7	90L/6C	65.0	95.0	-	-	48.8	154	-	121	159	204	410-421
		1530.9	0.6	10565	1.0				65.0	95.0	-	-	48.8						
		1270.1	0.7	8765	1.2				65.0	95.0	-	-	48.8						
		1093.7	0.8	7548	1.3				65.0	95.0	-	-	48.8						
		1008.9	0.9	6963	1.8				65.0	95.0	-	-	48.8						
		907.3	1.0	6262	1.5				65.0	95.0	-	-	48.8						
		806.4	1.1	5565	1.7				65.0	95.0	-	-	48.8						
		724.4	1.2	4999	1.8				65.0	95.0	-	-	48.8						
		640.5	1.4	4420	2.6				65.0	95.0	-	-	48.8						
		612.0	1.5	4224	2.7				65.0	95.0	-	-	48.8						
		576.1	1.6	3976	2.2				55.3	80.8	-	-	41.4						
	PL 10004	2229.7	0.6	9892	0.8	11.0	7.7	80M/4D	65.0	95.0	-	-	48.8	149	-	116	154	199	410-421
		1849.8	0.8	8207	1.2				65.0	95.0	-	-	48.8						
		1530.9	0.9	6792	1.4				65.0	95.0	-	-	48.8						
		1270.1	1.1	5635	1.7				65.0	95.0	-	-	48.8						
		1093.7	1.3	4852	1.9				65.0	95.0	-	-	48.8						
		1008.9	1.4	4476	2.6				65.0	95.0	-	-	48.8						
		907.3	1.5	4025	2.2				55.3	80.8	-	-	41.4						
		806.4	1.7	3578	2.4				55.3	80.8	-	-	41.4						
		724.4	1.9	3214	2.6				55.3	80.8	-	-	41.4						
	PL 10004	2229.7	1.3	4946	1.4	11.0	7.7	80M/2B	65.0	95.0	-	-	48.8	147	-	114	152	197	410-421
		1849.8	1.5	4103	2.2				55.3	80.8	-	-	41.4						
		1530.9	1.8	3396	2.5				55.3	80.8	-	-	41.4						
		1270.1	2.2	2817	3.0				55.3	80.8	-	-	41.4						
	PL 7004	1177.0	0.8	8123	0.9	8.0	5.6	90L/6C	-	-	115.0	138.0	86.3	-	117	99	120	134	392-400
		1048.7	0.9	7237	0.9				-	-	115.0	138.0	86.3						
		976.5	0.9	6739	1.0				-	-	115.0	138.0	86.3						
		870.0	1.0	6004	1.1				-	-	115.0	138.0	86.3						
		832.3	1.1	5744	1.3				-	-	115.0	138.0	86.3						
		768.7	1.2	5305	1.4				-	-	115.0	138.0	86.3						
		747.3	1.2	5157	1.2				-	-	115.0	138.0	86.3						
		661.9	1.4	4568	1.6				-	-	115.0	138.0	86.3						
		632.4	1.4	4364	1.6				-	-	115.0	138.0	86.3						
		571.7	1.6	3945	1.9				-	-	97.8	117.3	73.3						
		523.6	1.7	3614	2.1				-	-	97.8	117.3	73.3						
		474.3	1.9	3273	2.2				-	-	97.8	117.3	73.3						
		434.4	2.1	2998	2.4				-	-	97.8	117.3	73.3						
		400.7	2.2	2765	2.6				-	-	97.8	117.3	73.3						
		347.9	2.6	2401	2.9				-	-	89.1	107.0	66.8						
		332.4	2.7	2294	3.0				-	-	89.1	107.0	66.8						
	PL 7004	1651.6	0.8	7327	0.9	8.0	5.6	80M/4D	-	-	115.0	138.0	86.3	-	112	94	115	129	392-400
		1366.9	1.0	6064	1.1				-	-	115.0	138.0	86.3						
		1177.0	1.2	5222	1.2				-	-	115.0	138.0	86.3						
		1048.7	1.3	4653	1.4				-	-	115.0	138.0	86.3						
		976.5	1.4	4332	1.4				-	-	115.0	138.0	86.3						
		870.0	1.6	3860	1.6				-	-	97.8	117.3	73.3						
		832.3	1.7	3693	1.9				-	-	97.8	117.3	73.3						
		768.7	1.8	3410	2.0				-	-	97.8	117.3	73.3						
		747.3	1.9	3315	1.8				-	-	97.8	117.3	73.3						
		661.9	2.1	2937	2.2				-	-	97.8	117.3	73.3						
		632.4	2.2	2806	2.3				-	-	97.8	117.3	73.3						
		571.7	2.4	2536	2.8				-	-	97.8	117.3	73.3						
		523.6	2.7	2323	3.0				-	-	89.1	107.0	66.8						

P1 (kW)		iges	n2 (rpm)	M2 (Nm)	fs	Pt (20°C) (kW)	Pt (40°C) (kW)	Motor IE2	FR (kN)					~ Kg					mm
									MC	MS	PC	PS	CPC	M...	P...	F	FS	CPC	
0.75	PL 7004	1651.6	1.7	3664	1.6	8.0	5.6	80M/2B	-	-	97.8	117.3	73.3	-	110	92	113	127	392-400
		1366.9	2.0	3032	1.9				-	-	97.8	117.3	73.3						
		1177.0	2.4	2611	2.2				-	-	97.8	117.3	73.3						
		1048.7	2.7	2326	2.4				-	-	89.1	107.0	66.8						
		976.5	2.9	2166	2.5				-	-	89.1	107.0	66.8						
		870.0	3.2	1930	2.8				-	-	89.1	107.0	66.8						
	PL 5004	1052.5	0.9	7264	0.8	6.0	4.2	90L/6C	35.0	45.0	63.0	73.0	47.3	79	88	70	81	92	370-385
		858.0	1.0	5921	0.9				35.0	45.0	63.0	73.0	47.3						
		805.5	1.1	5559	1.0				35.0	45.0	63.0	73.0	47.3						
		737.7	1.2	5091	1.1				35.0	45.0	63.0	73.0	47.3						
		668.2	1.3	4611	1.1				35.0	45.0	63.0	73.0	47.3						
		612.0	1.5	4224	1.3				35.0	45.0	63.0	73.0	47.3						
		554.4	1.6	3826	1.3				29.8	38.3	53.6	62.1	40.2						
		511.4	1.8	3529	1.4				29.8	38.3	53.6	62.1	40.2						
		468.4	1.9	3233	1.6				29.8	38.3	53.6	62.1	40.2						
		424.3	2.1	2928	1.6				29.8	38.3	53.6	62.1	40.2						
		413.9	2.2	2856	1.8				29.8	38.3	53.6	62.1	40.2						
		388.6	2.3	2682	1.9				29.8	38.3	53.6	62.1	40.2						
		365.8	2.5	2524	1.5				29.8	38.3	53.6	62.1	40.2						
		352.0	2.6	2429	1.9				27.1	34.9	48.8	56.6	36.6						
	PL 5004	1318.3	1.1	5849	0.8	6.0	4.2	80M/4D	35.0	45.0	63.0	73.0	47.3	74	83	65	76	87	370-385
		1121.1	1.2	4974	1.1				35.0	45.0	63.0	73.0	47.3						
		1052.5	1.3	4669	1.1				35.0	45.0	63.0	73.0	47.3						
		907.3	1.5	4025	1.0				29.8	38.3	53.6	62.1	40.2						
		858.0	1.6	3807	1.3				29.8	38.3	53.6	62.1	40.2						
		805.5	1.7	3574	1.4				29.8	38.3	53.6	62.1	40.2						
		737.7	1.9	3273	1.6				29.8	38.3	53.6	62.1	40.2						
		668.2	2.1	2965	1.6				29.8	38.3	53.6	62.1	40.2						
		612.0	2.3	2715	1.9				29.8	38.3	53.6	62.1	40.2						
		554.4	2.5	2460	1.9				27.1	34.9	48.8	56.6	36.6						
		511.4	2.7	2269	2.0				27.1	34.9	48.8	56.6	36.6						
		468.4	3.0	2078	2.4				27.1	34.9	48.8	56.6	36.6						
		424.3	3.3	1882	2.3				27.1	34.9	48.8	56.6	36.6						
		413.9	3.4	1836	2.6				27.1	34.9	48.8	56.6	36.6						
		388.6	3.6	1724	2.7				25.4	32.6	45.7	52.9	34.3						
		365.8	3.8	1623	2.2				25.4	32.6	45.7	52.9	34.3						
		352.0	4.0	1562	2.7				25.4	32.6	45.7	52.9	34.3						
	PL 5004	1845.3	1.5	4093	0.9	6.0	4.2	80M/2B	29.8	38.3	53.6	62.1	40.2	72	81	63	74	85	370-385
		1589.0	1.8	3525	1.1				29.8	38.3	53.6	62.1	40.2						
		1318.3	2.1	2924	1.3				29.8	38.3	53.6	62.1	40.2						
		1121.1	2.5	2487	1.9				29.8	38.3	53.6	62.1	40.2						
		1052.5	2.7	2335	2.0				27.1	34.9	48.8	56.6	36.6						
		907.3	3.1	2013	1.8				27.1	34.9	48.8	56.6	36.6						
		858.0	3.3	1903	2.3				27.1	34.9	48.8	56.6	36.6						
		805.5	3.5	1787	2.4				27.1	34.9	48.8	56.6	36.6						
		737.7	3.8	1636	2.9				25.4	32.6	45.7	52.9	34.3						
		668.2	4.2	1482	2.9				25.4	32.6	45.7	52.9	34.3						
	PL 2504	737.7	1.2	5091	0.8	4.0	2.8	90L/6C	35.0	45.0	63.0	73.0	47.3	73	82	64	75	86	348-363
		668.2	1.3	4611	0.8				35.0	45.0	63.0	73.0	47.3						
		612.0	1.5	4224	0.9				35.0	45.0	63.0	73.0	47.3						
		554.4	1.6	3826	0.9				29.8	38.3	53.6	62.1	40.2						
		511.4	1.8	3529	1.0				29.8	38.3	53.6	62.1	40.2						
		468.4	1.9	3233	1.1				29.8	38.3	53.6	62.1	40.2						
		424.3	2.1	2928	1.1				29.8	38.3	53.6	62.1	40.2						
		413.9	2.2	2856	1.3				29.8	38.3	53.6	62.1	40.2						
		388.6	2.3	2682	1.3				29.8	38.3	53.6	62.1	40.2						
		365.8	2.5	2524	1.0				29.8	38.3	53.6	62.1	40.2						
		352.0	2.6	2429	1.3				27.1	34.9	48.8	56.6	36.6						
	PL 2504	1052.5	1.3	4669	0.8	4.0	2.8	80M/4D	35.0	45.0	63.0	73.0	47.3	68	77	59	70	81	348-363
		858.0	1.6	3807	0.9				29.8	38.3	53.6	62.1	40.2						
		805.5	1.7	3574	0.9				29.8	38.3	53.6	62.1	40.2						
		737.7	1.9	3273	1.1				29.8	38.3	53.6	62.1	40.2						
		668.2	2.1	2965	1.1				29.8	38.3	53.6	62.1	40.2						
		612.0	2.3	2715	1.3				29.8	38.3	53.6	62.1	40.2						
		554.4	2.5	2460	1.3				27.1	34.9	48.8	56.6	36.6						
		511.4	2.7	2269	1.4				27.1	34.9	48.8	56.6	36.6						
		468.4	3.0	2078	1.6				27.1	34.9	48.8	56.6	36.6						
		424.3	3.3	1882	1.6				27.1	34.9	48.8	56.6	36.6						
		413.9	3.4	1836	1.8				27.1	34.9	48.8	56.6	36.6						
		388.6	3.6	1724	1.9				25.4	32.6	45.7	52.9	34.3						
		365.8	3.8	1623	1.5				25.4	32.6	45.7	52.9	34.3						
		352.0	4.0	1562	1.9				25.4	32.6	45.7	52.9	34.3						

P1 (kW)		iges	n2 (rpm)	M2 (Nm)	fs	Pt (20°C) (kW)	Pt (40°C) (kW)	Motor IE2	FR (kN)					~ Kg					mm
									MC	MS	PC	PS	CPC	M...	P...	F	FS	CPC	
0.75	PL 2504	1589.0	1.8	3525	0.8	4.0	2.8	80M/2B	29.8	38.3	53.6	62.1	40.2	66	75	57	68	79	348-363
		1318.3	2.1	2924	0.9				29.8	38.3	53.6	62.1	40.2						
		1121.1	2.5	2487	1.3				29.8	38.3	53.6	62.1	40.2						
		1052.5	2.7	2335	1.4				27.1	34.9	48.8	56.6	36.6						
		907.3	3.1	2013	1.3				27.1	34.9	48.8	56.6	36.6						
		858.0	3.3	1903	1.6				27.1	34.9	48.8	56.6	36.6						
		805.5	3.5	1787	1.7				27.1	34.9	48.8	56.6	36.6						
		737.7	3.8	1636	2.0				25.4	32.6	45.7	52.9	34.3						
		668.2	4.2	1482	2.0				25.4	32.6	45.7	52.9	34.3						
		612.0	4.6	1358	2.3				23.6	30.4	42.5	49.3	31.9						
		554.4	5.1	1230	2.3				23.6	30.4	42.5	49.3	31.9						
		511.4	5.5	1134	2.4				23.6	30.4	42.5	49.3	31.9						
		468.4	6.0	1039	2.9				21.0	27.0	37.8	43.8	28.4						
		424.3	6.6	941	2.9				20.1	25.9	36.2	42.0	27.2						
		365.8	7.7	811	2.7				19.3	24.8	34.7	40.2	26.0						
	PL 1604	477.9	2.9	2120	0.8	1.5	1.1	80M/4D	8.5	10.5	18.6	23.3	14.0	54	56	52	55	59	326-340
		440.8	3.2	1956	0.8				8.5	10.5	18.6	23.3	14.0						
		396.4	3.5	1759	0.9				8.0	9.8	17.4	21.8	13.1						
		365.7	3.8	1622	1.0				8.0	9.8	17.4	21.8	13.1						
		337.4	4.1	1497	1.0				8.0	9.8	17.4	21.8	13.1						
	PL 1604	966.3	2.9	2144	0.8	1.5	1.1	80M/2B	8.5	10.5	18.6	23.3	14.0	52	54	50	53	57	326-340
		907.2	3.1	2012	0.8				8.5	10.5	18.6	23.3	14.0						
		836.9	3.3	1856	0.9				8.5	10.5	18.6	23.3	14.0						
		752.6	3.7	1669	0.9				8.0	9.8	17.4	21.8	13.1						
		694.3	4.0	1540	1.0				8.0	9.8	17.4	21.8	13.1						
		624.4	4.5	1385	1.1				8.0	9.8	17.4	21.8	13.1						
		576.0	4.9	1278	1.2				7.4	9.1	16.2	20.3	12.2						
		531.3	5.3	1179	1.3				7.4	9.1	16.2	20.3	12.2						
		477.9	5.9	1060	1.4				6.6	8.1	14.4	18.0	10.8						
		440.8	6.4	978	1.5				6.6	8.1	14.4	18.0	10.8						
		396.4	7.1	879	1.6				6.3	7.8	13.8	17.3	10.4						
		365.7	7.7	811	1.7				6.1	7.4	13.2	16.5	9.9						
		337.4	8.3	748	1.8				6.1	7.4	13.2	16.5	9.9						
	PL 1004	576.0	4.9	1278	0.8	1.5	1.1	80M/2B	7.4	9.1	16.2	20.3	12.2	50	52	48	51	55	304-318
		531.3	5.3	1179	0.8				7.4	9.1	16.2	20.3	12.2						
		477.9	5.9	1060	0.9				6.6	8.1	14.4	18.0	10.8						
		440.8	6.4	978	1.0				6.6	8.1	14.4	18.0	10.8						
		396.4	7.1	879	1.0				6.3	7.8	13.8	17.3	10.4						
		365.7	7.7	811	1.1				6.1	7.4	13.2	16.5	9.9						
		337.4	8.3	748	1.2				6.1	7.4	13.2	16.5	9.9						
	PL 10003	330.3	2.7	2362	2.6	15.0	10.5	90L/6C	50.4	73.6	-	-	37.8	148	-	115	153	198	410-421
	PL 7003	342.6	2.6	2450	1.6	14.0	9.8	90L/6C	-	-	89.1	107.0	66.8	-	111	93	114	128	392-400
		283.8	3.2	2030	2.3				-	-	89.1	107.0	66.8						
		244.7	3.7	1750	3.0				-	-	83.4	100.1	62.5						
	PL 7003	342.6	4.1	1575	2.2	14.0	9.8	80M/4D	-	-	83.4	100.1	62.5	-	106	88	109	123	392-400
	PL 5003	330.3	2.7	2362	1.1	10.0	7.0	90L/6C	27.1	34.9	48.8	56.6	36.6	73	82	64	75	86	370-385
		302.2	3.0	2161	1.7				27.1	34.9	48.8	56.6	36.6						
		273.4	3.3	1955	1.6				27.1	34.9	48.8	56.6	36.6						
		235.4	3.8	1683	2.1				25.4	32.6	45.7	52.9	34.3						
		195.3	4.6	1397	2.5				23.6	30.4	42.5	49.3	31.9						
		173.6	5.2	1242	2.3				23.6	30.4	42.5	49.3	31.9						
		162.0	5.6	1159	2.9				21.0	27.0	37.8	43.8	28.4						
	PL 5003	330.3	4.2	1519	1.6	10.0	7.0	80M/4D	25.4	32.6	45.7	52.9	34.3	68	77	59	70	81	370-385
		302.2	4.6	1389	2.5				23.6	30.4	42.5	49.3	31.9						
		273.4	5.1	1257	2.3				23.6	30.4	42.5	49.3	31.9						
		235.4	5.9	1082	3.0				21.0	27.0	37.8	43.8	28.4						
	PL 5003	330.3	8.5	759	2.8	10.0	7.0	80M/2B	19.3	24.8	34.7	40.2	26.0	66	75	57	68	79	370-385
	PL 2503	302.2	3.0	2161	1.2	8.0	5.6	90L/6C	27.1	34.9	48.8	56.6	36.6	67	76	58	69	80	348-363
		273.4	3.3	1955	1.1				27.1	34.9	48.8	56.6	36.6						
		235.4	3.8	1683	1.4				25.4	32.6	45.7	52.9	34.3						
		195.3	4.6	1397	1.7				23.6	30.4	42.5	49.3	31.9						
		173.6	5.2	1242	1.6				23.6	30.4	42.5	49.3	31.9						
		162.0	5.6	1159	2.0				21.0	27.0	37.8	43.8	28.4						
		155.9	5.8	1115	2.5				21.0	27.0	37.8	43.8	28.4						
		149.5	6.0	1069	2.1				21.0	27.0	37.8	43.8	28.4						
		129.4	7.0	925	2.9				20.1	25.9	36.2	42.0	27.2						
	PL 2503	330.3	4.2	1519	1.0	8.0	5.6	80M/4D	25.4	32.6	45.7	52.9	34.3	62	71	53	64	75	348-363
		302.2	4.6	1389	1.7				23.6	30.4	42.5	49.3	31.9						
		273.4	5.1	1257	1.6				23.6	30.4	42.5	49.3	31.9						
		235.4	5.9	1082	2.1				21.0	27.0	37.8	43.8	28.4						
		195.3	7.2	898	2.5				19.3	24.8	34.7	40.2	26.0						
		173.6	8.1	798	2.3				19.3	24.8	34.7	40.2	26.0						
		162.0	8.6	745	2.9				18.4	23.6	33.1	38.3	24.8						

P1 (kW)		iges	n2 (rpm)	M2 (Nm)	fs	Pt (20°C) (kW)	Pt (40°C) (kW)	Motor IE2	FR (kN)					~ Kg					mm
									MC	MS	PC	PS	CPC	M...	P...	F	FS	CPC	
0.75	PL 2503	424.1	6.6	975	1.5	8.0	5.6	80M/2B	20.1	25.9	36.2	42.0	27.2	60	69	51	62	73	348-363
		330.3	8.5	759	1.8				19.3	24.8	34.7	40.2	26.0						
		302.2	9.3	695	3.0				18.4	23.6	33.1	38.3	24.8						
		273.4	10.2	628	2.8				17.5	22.5	31.5	36.5	23.6						
	PL 1603	208.0	4.3	1488	1.0	5.0	3.5	90L/6C	8.0	9.8	17.4	21.8	13.1	53	55	51	54	58	326-340
		172.6	5.2	1234	1.2				7.4	9.1	16.2	20.3	12.2						
		162.0	5.6	1159	1.3				6.6	8.1	14.4	18.0	10.8						
		134.4	6.7	961	1.5				6.3	7.8	13.8	17.3	10.4						
		111.5	8.1	797	1.7				6.1	7.4	13.2	16.5	9.9						
		102.9	8.7	736	1.8				5.8	7.1	12.6	15.8	9.5						
		85.3	10.6	610	2.2				5.5	6.8	12.0	15.0	9.0						
		78.7	11.4	563	2.3				5.5	6.8	12.0	15.0	9.0						
		70.8	12.7	506	2.5				5.2	6.3	11.3	14.1	8.5						
		65.3	13.8	467	2.7				5.2	6.3	11.3	14.1	8.5						
	PL 1603	271.8	5.2	1250	0.8	5.0	3.5	80M/4D	7.4	9.1	16.2	20.3	12.2	48	50	46	49	53	326-340
		255.2	5.5	1173	0.9				7.4	9.1	16.2	20.3	12.2						
		211.7	6.6	973	1.0				6.3	7.8	13.8	17.3	10.4						
		208.0	6.7	956	1.5				6.3	7.8	13.8	17.3	10.4						
		172.6	8.1	794	1.7				6.1	7.4	13.2	16.5	9.9						
		162.0	8.6	745	1.8				5.8	7.1	12.6	15.8	9.5						
		134.4	10.4	618	2.2				5.5	6.8	12.0	15.0	9.0						
		111.5	12.6	513	2.5				5.3	6.5	11.6	14.6	8.7						
		102.9	13.6	473	2.7				5.3	6.5	11.6	14.6	8.7						
	PL 1603	394.9	7.1	908	0.9	5.0	3.5	80M/2B	6.3	7.8	13.8	17.3	10.4	46	48	44	47	51	326-340
		327.6	8.5	753	1.3				5.8	7.1	12.6	15.8	9.5						
		307.5	9.1	707	1.1				5.8	7.1	12.6	15.8	9.5						
		271.8	10.3	625	1.5				5.5	6.8	12.0	15.0	9.0						
		255.2	11.0	587	1.6				5.5	6.8	12.0	15.0	9.0						
		211.7	13.2	487	1.9				5.2	6.3	11.3	14.1	8.5						
		208.0	13.5	478	2.7				5.2	6.3	11.3	14.1	8.5						
	PL 1003	172.6	5.2	1234	0.8	5.0	3.5	90L/6C	7.4	9.1	16.2	20.3	12.2	51	53	49	52	56	304-318
		162.0	5.6	1159	0.8				6.6	8.1	14.4	18.0	10.8						
		134.4	6.7	961	1.0				6.3	7.8	13.8	17.3	10.4						
		111.5	8.1	797	1.1				6.1	7.4	13.2	16.5	9.9						
		102.9	8.7	736	1.2				5.8	7.1	12.6	15.8	9.5						
		85.3	10.6	610	1.4				5.5	6.8	12.0	15.0	9.0						
		78.7	11.4	563	1.5				5.5	6.8	12.0	15.0	9.0						
		70.8	12.7	506	1.6				5.2	6.3	11.3	14.1	8.5						
		65.3	13.8	467	1.8				5.2	6.3	11.3	14.1	8.5						
		54.2	16.6	388	2.1				5.2	6.3	11.3	14.1	8.5						
	PL 1003	208.0	6.7	956	1.0	5.0	3.5	80M/4D	6.3	7.8	13.8	17.3	10.4	46	48	44	47	51	304-318
		172.6	8.1	794	1.1				6.1	7.4	13.2	16.5	9.9						
		162.0	8.6	745	1.2				5.8	7.1	12.6	15.8	9.5						
		134.4	10.4	618	1.4				5.5	6.8	12.0	15.0	9.0						
		111.5	12.6	513	1.6				5.3	6.5	11.6	14.6	8.7						
		102.9	13.6	473	1.7				5.3	6.5	11.6	14.6	8.7						
		85.3	16.4	392	2.0				5.2	6.3	11.3	14.1	8.5						
		78.7	17.8	362	2.2				4.9	6.0	10.7	13.4	8.0						
		70.8	19.8	326	2.3				4.6	5.6	10.0	12.5	7.5						
		65.3	21.4	300	2.5				4.6	5.6	10.0	12.5	7.5						
		54.2	25.8	249	2.9				4.3	5.3	9.4	11.7	7.0						
	PL 1003	327.6	8.5	753	0.9	5.0	3.5	80M/2B	5.8	7.1	12.6	15.8	9.5	44	46	42	45	49	304-318
		307.5	9.1	707	0.8				5.8	7.1	12.6	15.8	9.5						
		271.8	10.3	625	1.0				5.5	6.8	12.0	15.0	9.0						
		255.2	11.0	587	1.1				5.5	6.8	12.0	15.0	9.0						
		211.7	13.2	487	1.2				5.2	6.3	11.3	14.1	8.5						
		208.0	13.5	478	1.7				5.2	6.3	11.3	14.1	8.5						
		172.6	16.2	397	2.0				5.2	6.3	11.3	14.1	8.5						
		162.0	17.3	372	2.1				5.2	6.3	11.3	14.1	8.5						
		134.4	20.8	309	2.4				4.6	5.6	10.0	12.5	7.5						
		111.5	25.1	256	2.9				4.3	5.3	9.4	11.7	7.0						
	PL 2502	62.8	14.3	465	2.8	12.0	8.4	90L/6C	16.5	21.2	29.6	34.3	22.2	61	70	53	63	74	348-363
	PL 1602	58.5	15.4	434	1.7	8.0	5.6	90L/6C	5.2	6.3	11.3	14.1	8.5	47	49	45	48	52	326-340
		45.6	19.7	338	2.1				4.6	5.6	10.0	12.5	7.5						
		37.8	23.8	280	2.9				4.3	5.3	9.4	11.7	7.0						
	PL 1602	58.5	23.9	279	2.4	8.0	5.6	80M/4D	4.3	5.3	9.4	11.7	7.0	42	44	40	43	47	326-340
		45.6	30.7	217	3.0				4.1	5.0	8.9	11.1	6.7						
	PL 1002	58.5	15.4	434	1.2	8.0	5.6	90L/6C	5.2	6.3	11.3	14.1	8.5	45	47	43	46	50	304-318
		45.6	19.7	338	1.4				4.6	5.6	10.0	12.5	7.5						
		37.8	23.8	280	1.9				4.3	5.3	9.4	11.7	7.0						
		31.4	28.7	233	2.3				4.1	5.0	8.9	11.1	6.7						

P1 (kW)		iges	n2 (rpm)	M2 (Nm)	fs	Pt (20°C) (kW)	Pt (40°C) (kW)	Motor IE2	FR (kN)					~ Kg					mm
									MC	MS	PC	PS	CPC	M...	P...	F	FS	CPC	
0.75	PL 1002	58.5	23.9	279	1.7	8.0	5.6	80M/4D	4.3	5.3	9.4	11.7	7.0	40	42	38	41	45	304-318
		45.6	30.7	217	2.1				4.1	5.0	8.9	11.1	6.7						
		37.8	37.0	180	2.8				3.8	4.6	8.2	10.3	6.2						
	PL 1002	58.5	47.9	139	3.0	8.0	5.6	80M/2B	3.5	4.3	7.7	9.6	5.8	38	40	36	39	43	304-318
1.10	PL 50004	1982.0	0.5	20062	2.4	20.0	14.0	90L/6D	178.0	246.0	-	-	133.5	427.5	-	369.5	382.5	535.5	536-549
	PL 30004	1425.1	0.6	14425	2.1	17.0	11.9	90L/6D	90.0	137.0	-	-	67.5	289.5	-	248.5	256.5	352.5	496-509
		1015.5	0.9	10279	2.8				90.0	137.0	-	-	67.5						
	PL 30004	1425.1	1.0	9273	3.0	17.0	11.9	90L/4C	90.0	137.0	-	-	67.5	288	-	247	255	351	496-509
	PL 25004	1774.0	0.5	17956	1.4	15.0	10.5	90L/6D	90.0	137.0	-	-	67.5	256.5	-	220.5	228.5	317.5	476-489
		1529.3	0.6	15479	1.5				90.0	137.0	-	-	67.5						
		1476.0	0.6	14940	2.0				90.0	137.0	-	-	67.5						
		1354.5	0.7	13710	1.7				90.0	137.0	-	-	67.5						
		1272.4	0.7	12879	2.3				90.0	137.0	-	-	67.5						
		1126.9	0.8	11406	2.6				90.0	137.0	-	-	67.5						
		1013.4	0.9	10258	2.8				90.0	137.0	-	-	67.5						
		934.9	1.0	9463	3.0				90.0	137.0	-	-	67.5						
	PL 25004	1774.0	0.8	11543	1.9	15.0	10.5	90L/4C	90.0	137.0	-	-	67.5	255	-	219	227	316	476-489
		1529.3	0.9	9951	2.2				90.0	137.0	-	-	67.5						
		1476.0	0.9	9604	3.0				90.0	137.0	-	-	67.5						
		1354.5	1.0	8814	2.4				90.0	137.0	-	-	67.5						
	PL 18004	1216.4	0.7	12312	1.6	13.0	9.1	90L/6D	60.0	106.0	140.0	186.0	45.0	177.5	204.5	146.5	182.5	227.5	452-469
		1113.0	0.8	11266	1.7				60.0	106.0	140.0	186.0	45.0						
		987.4	0.9	9994	1.9				60.0	106.0	140.0	186.0	45.0						
		928.8	1.0	9401	2.0				60.0	106.0	140.0	186.0	45.0						
		849.8	1.1	8602	2.1				60.0	106.0	140.0	186.0	45.0						
		818.8	1.1	8288	2.5				60.0	106.0	140.0	186.0	45.0						
		770.5	1.2	7799	2.6				60.0	106.0	140.0	186.0	45.0						
		720.0	1.3	7288	2.8				60.0	106.0	140.0	186.0	45.0						
		677.9	1.3	6862	2.9				60.0	106.0	140.0	186.0	45.0						
	PL 18004	1216.4	1.2	7915	2.3	13.0	9.1	90L/4C	60.0	106.0	140.0	186.0	45.0	176	203	145	181	226	452-469
		1113.0	1.3	7242	2.4				60.0	106.0	140.0	186.0	45.0						
		987.4	1.4	6425	2.7				60.0	106.0	140.0	186.0	45.0						
		928.8	1.5	6044	2.8				51.0	90.1	119.0	158.1	38.3						
	PL 16004	1849.8	0.5	18724	0.9	11.0	7.7	90L/6D	60.0	106.0	140.0	186.0	45.0	163.5	190.5	132.5	168.5	213.5	428-445
		1530.9	0.6	15496	1.0				60.0	106.0	140.0	186.0	45.0						
		1270.1	0.7	12856	1.2				60.0	106.0	140.0	186.0	45.0						
		1093.7	0.8	11070	1.3				60.0	106.0	140.0	186.0	45.0						
		1008.9	0.9	10212	1.8				60.0	106.0	140.0	186.0	45.0						
		907.3	1.0	9184	1.5				60.0	106.0	140.0	186.0	45.0						
		806.4	1.1	8162	1.7				60.0	106.0	140.0	186.0	45.0						
		724.4	1.2	7332	1.8				60.0	106.0	140.0	186.0	45.0						
		640.5	1.4	6483	2.7				60.0	106.0	140.0	186.0	45.0						
		612.0	1.5	6195	2.8				60.0	106.0	140.0	186.0	45.0						
		576.1	1.6	5831	2.2				51.0	90.1	119.0	158.1	38.3						
	PL 16004	2229.7	0.6	14509	0.8	11.0	7.7	90L/4C	60.0	106.0	140.0	186.0	45.0	162	189	131	167	212	428-445
		1849.8	0.8	12037	1.2				60.0	106.0	140.0	186.0	45.0						
		1530.9	0.9	9961	1.5				60.0	106.0	140.0	186.0	45.0						
		1270.1	1.1	8264	1.7				60.0	106.0	140.0	186.0	45.0						
		1093.7	1.3	7117	1.9				60.0	106.0	140.0	186.0	45.0						
		1008.9	1.4	6565	2.6				60.0	106.0	140.0	186.0	45.0						
		907.3	1.5	5904	2.2				51.0	90.1	119.0	158.1	38.3						
		806.4	1.7	5247	2.4				51.0	90.1	119.0	158.1	38.3						
		724.4	1.9	4714	2.6				51.0	90.1	119.0	158.1	38.3						
	PL 16004	2229.7	1.3	7254	1.4	11.0	7.7	80M/2D	60.0	106.0	140.0	186.0	45.0	157	184	126	162	207	428-445
		1849.8	1.5	6018	2.2				51.0	90.1	119.0	158.1	38.3						
		1530.9	1.8	4981	2.5				51.0	90.1	119.0	158.1	38.3						
		1270.1	2.2	4132	3.0				51.0	90.1	119.0	158.1	38.3						
	PL 10004	1270.1	0.7	12856	0.8	11.0	7.7	90L/6D	65.0	95.0	-	-	48.8	155.5	-	122.5	160.5	205.5	410-421
		1093.7	0.8	11070	0.9				65.0	95.0	-	-	48.8						
		1008.9	0.9	10212	1.2				65.0	95.0	-	-	48.8						
		907.3	1.0	9184	1.1				65.0	95.0	-	-	48.8						
		806.4	1.1	8162	1.2				65.0	95.0	-	-	48.8						
		724.4	1.2	7332	1.3				65.0	95.0	-	-	48.8						
		640.5	1.4	6483	1.8				65.0	95.0	-	-	48.8						
		612.0	1.5	6195	1.9				65.0	95.0	-	-	48.8						
		576.1	1.6	5831	1.5				55.3	80.8	-	-	41.4						
		554.4	1.6	5612	2.4				55.3	80.8	-	-	41.4						
		531.4	1.7	5379	2.1				55.3	80.8	-	-	41.4						
		507.7	1.8	5139	2.5				55.3	80.8	-	-	41.4						
		459.9	2.0	4655	2.7				55.3	80.8	-	-	41.4						
		440.9	2.0	4463	2.4				55.3	80.8	-	-	41.4						
		421.2	2.1	4263	2.9				55.3	80.8	-	-	41.4						

P1 (kW)		iges	n2 (rpm)	M2 (Nm)	fs	Pt (20°C) (kW)	Pt (40°C) (kW)	Motor IE2	FR (kN)					~ Kg					mm
									MC	MS	PC	PS	CPC	M...	P...	F	FS	CPC	
1.10	PL 10004	1849.8	0.8	12037	0.8	11.0	7.7	90L/4C	65.0	95.0	-	-	48.8	154	-	121	159	204	410-421
		1530.9	0.9	9961	1.0				65.0	95.0	-	-	48.8						
		1270.1	1.1	8264	1.1				65.0	95.0	-	-	48.8						
		1093.7	1.3	7117	1.3				65.0	95.0	-	-	48.8						
		1008.9	1.4	6565	1.8				65.0	95.0	-	-	48.8						
		907.3	1.5	5904	1.5				55.3	80.8	-	-	41.4						
		806.4	1.7	5247	1.6				55.3	80.8	-	-	41.4						
		724.4	1.9	4714	1.8				55.3	80.8	-	-	41.4						
		640.5	2.2	4168	2.6				55.3	80.8	-	-	41.4						
		612.0	2.3	3982	2.7				55.3	80.8	-	-	41.4						
		576.1	2.4	3749	2.2				55.3	80.8	-	-	41.4						
		531.4	2.6	3458	3.0				50.4	73.6	-	-	37.8						
	PL 10004	2229.7	1.3	7254	1.0	11.0	7.7	80M/2D	65.0	95.0	-	-	48.8	149	-	116	154	199	410-421
		1849.8	1.5	6018	1.5				55.3	80.8	-	-	41.4						
		1530.9	1.8	4981	1.7				55.3	80.8	-	-	41.4						
		1270.1	2.2	4132	2.0				55.3	80.8	-	-	41.4						
		1093.7	2.6	3558	2.3				50.4	73.6	-	-	37.8						
		907.3	3.1	2952	2.7				50.4	73.6	-	-	37.8						
		806.4	3.5	2624	2.9				50.4	73.6	-	-	37.8						
	PL 7004	832.3	1.1	8424	0.9	8.0	5.6	90L/6D	-	-	115.0	138.0	86.3	-	118.5	100.5	121.5	135.5	392-400
		768.7	1.2	7781	0.9				-	-	115.0	138.0	86.3						
		747.3	1.2	7564	0.8				-	-	115.0	138.0	86.3						
		661.9	1.4	6700	1.1				-	-	115.0	138.0	86.3						
		632.4	1.4	6401	1.1				-	-	115.0	138.0	86.3						
		571.7	1.6	5787	1.3				-	-	97.8	117.3	73.3						
		523.6	1.7	5300	1.4				-	-	97.8	117.3	73.3						
		474.3	1.9	4801	1.5				-	-	97.8	117.3	73.3						
		434.4	2.1	4397	1.6				-	-	97.8	117.3	73.3						
		400.7	2.2	4056	1.8				-	-	97.8	117.3	73.3						
		347.9	2.6	3521	2.0				-	-	89.1	107.0	66.8						
		332.4	2.7	3365	2.1				-	-	89.1	107.0	66.8						
		301.1	3.0	3048	2.2				-	-	89.1	107.0	66.8						
	PL 7004	1177.0	1.2	7659	0.8	8.0	5.6	90L/4C	-	-	115.0	138.0	86.3	-	117	99	120	134	392-400
		1048.7	1.3	6824	0.9				-	-	115.0	138.0	86.3						
		976.5	1.4	6354	1.0				-	-	115.0	138.0	86.3						
		870.0	1.6	5661	1.1				-	-	97.8	117.3	73.3						
		832.3	1.7	5416	1.3				-	-	97.8	117.3	73.3						
		768.7	1.8	5002	1.3				-	-	97.8	117.3	73.3						
		747.3	1.9	4863	1.2				-	-	97.8	117.3	73.3						
		661.9	2.1	4307	1.5				-	-	97.8	117.3	73.3						
		632.4	2.2	4115	1.6				-	-	97.8	117.3	73.3						
		571.7	2.4	3720	1.9				-	-	97.8	117.3	73.3						
		523.6	2.7	3407	2.0				-	-	89.1	107.0	66.8						
		474.3	3.0	3086	2.2				-	-	89.1	107.0	66.8						
		434.4	3.2	2827	2.4				-	-	89.1	107.0	66.8						
		400.7	3.5	2607	2.5				-	-	89.1	107.0	66.8						
		347.9	4.0	2264	2.8				-	-	83.4	100.1	62.5						
		332.4	4.2	2163	2.9				-	-	83.4	100.1	62.5						
	PL 7004	1651.6	1.7	5373	1.1	8.0	5.6	80M/2D	-	-	97.8	117.3	73.3	-	112	94	115	129	392-400
		1366.9	2.0	4447	1.3				-	-	97.8	117.3	73.3						
		1177.0	2.4	3829	1.5				-	-	97.8	117.3	73.3						
		1048.7	2.7	3412	1.6				-	-	89.1	107.0	66.8						
		976.5	2.9	3177	1.7				-	-	89.1	107.0	66.8						
		870.0	3.2	2831	1.9				-	-	89.1	107.0	66.8						
		832.3	3.4	2708	2.2				-	-	89.1	107.0	66.8						
		768.7	3.6	2501	2.4				-	-	83.4	100.1	62.5						
		747.3	3.7	2431	2.1				-	-	83.4	100.1	62.5						
		661.9	4.2	2153	2.7				-	-	83.4	100.1	62.5						
		632.4	4.4	2057	2.8				-	-	83.4	100.1	62.5						
	PL 5004	737.7	1.2	7467	0.8	6.0	4.2	90L/6D	35.0	45.0	63.0	73.0	47.3	80.5	89.5	71.5	82.5	93.5	370-385
		668.2	1.3	6763	0.8				35.0	45.0	63.0	73.0	47.3						
		612.0	1.5	6195	0.9				35.0	45.0	63.0	73.0	47.3						
		554.4	1.6	5612	0.9				29.8	38.3	53.6	62.1	40.2						
		511.4	1.8	5176	1.0				29.8	38.3	53.6	62.1	40.2						
		468.4	1.9	4741	1.1				29.8	38.3	53.6	62.1	40.2						
		424.3	2.1	4295	1.1				29.8	38.3	53.6	62.1	40.2						
		413.9	2.2	4189	1.2				29.8	38.3	53.6	62.1	40.2						
		388.6	2.3	3933	1.3				29.8	38.3	53.6	62.1	40.2						
		365.8	2.5	3703	1.0				29.8	38.3	53.6	62.1	40.2						
		352.0	2.6	3563	1.3				27.1	34.9	48.8	56.6	36.6						

P1 (kW)		iges	n2 (rpm)	M2 (Nm)	fs	Pt (20°C) (kW)	Pt (40°C) (kW)	Motor IE2	FR (kN)					~ Kg					mm
									MC	MS	PC	PS	CPC	M...	P...	F	FS	CPC	
1.10	PL 5004	1052.5	1.3	6849	0.8	6.0	4.2	90L/4C	35.0	45.0	63.0	73.0	47.3	79	88	70	81	92	370-385
		858.0	1.6	5583	0.9				29.8	38.3	53.6	62.1	40.2						
		805.5	1.7	5241	0.9				29.8	38.3	53.6	62.1	40.2						
		737.7	1.9	4800	1.1				29.8	38.3	53.6	62.1	40.2						
		668.2	2.1	4348	1.1				29.8	38.3	53.6	62.1	40.2						
		612.0	2.3	3982	1.3				29.8	38.3	53.6	62.1	40.2						
		554.4	2.5	3607	1.3				27.1	34.9	48.8	56.6	36.6						
		511.4	2.7	3328	1.4				27.1	34.9	48.8	56.6	36.6						
		468.4	3.0	3048	1.6				27.1	34.9	48.8	56.6	36.6						
		424.3	3.3	2761	1.6				27.1	34.9	48.8	56.6	36.6						
		413.9	3.4	2693	1.8				27.1	34.9	48.8	56.6	36.6						
		388.6	3.6	2529	1.9				25.4	32.6	45.7	52.9	34.3						
		365.8	3.8	2380	1.5				25.4	32.6	45.7	52.9	34.3						
		352.0	4.0	2290	1.9				25.4	32.6	45.7	52.9	34.3						
	PL 5004	1589.0	1.8	5170	0.8	6.0	4.2	80M/2D	29.8	38.3	53.6	62.1	40.2	74	83	65	76	87	370-385
		1318.3	2.1	4289	0.9				29.8	38.3	53.6	62.1	40.2						
		1121.1	2.5	3647	1.3				29.8	38.3	53.6	62.1	40.2						
		1052.5	2.7	3424	1.4				27.1	34.9	48.8	56.6	36.6						
		907.3	3.1	2952	1.2				27.1	34.9	48.8	56.6	36.6						
		858.0	3.3	2791	1.6				27.1	34.9	48.8	56.6	36.6						
		805.5	3.5	2621	1.7				27.1	34.9	48.8	56.6	36.6						
		737.7	3.8	2400	2.0				25.4	32.6	45.7	52.9	34.3						
		668.2	4.2	2174	1.9				25.4	32.6	45.7	52.9	34.3						
		612.0	4.6	1991	2.3				23.6	30.4	42.5	49.3	31.9						
		554.4	5.1	1804	2.3				23.6	30.4	42.5	49.3	31.9						
		511.4	5.5	1664	2.4				23.6	30.4	42.5	49.3	31.9						
		468.4	6.0	1524	2.9				21.0	27.0	37.8	43.8	28.4						
		424.3	6.6	1380	2.9				20.1	25.9	36.2	42.0	27.2						
		365.8	7.7	1190	2.6				19.3	24.8	34.7	40.2	26.0						
	PL 2504	468.4	1.9	4741	0.8	4.0	2.8	90L/6D	29.8	38.3	53.6	62.1	40.2	74.5	83.5	65.5	76.5	87.5	348-363
		424.3	2.1	4295	0.8				29.8	38.3	53.6	62.1	40.2						
		413.9	2.2	4189	0.9				29.8	38.3	53.6	62.1	40.2						
		388.6	2.3	3933	0.9				29.8	38.3	53.6	62.1	40.2						
		352.0	2.6	3563	0.9				27.1	34.9	48.8	56.6	36.6						
	PL 2504	737.7	1.9	4800	0.8	4.0	2.8	90L/4C	29.8	38.3	53.6	62.1	40.2	73	82	64	75	86	348-363
		668.2	2.1	4348	0.8				29.8	38.3	53.6	62.1	40.2						
		612.0	2.3	3982	0.9				29.8	38.3	53.6	62.1	40.2						
		554.4	2.5	3607	0.9				27.1	34.9	48.8	56.6	36.6						
		511.4	2.7	3328	0.9				27.1	34.9	48.8	56.6	36.6						
		468.4	3.0	3048	1.1				27.1	34.9	48.8	56.6	36.6						
		424.3	3.3	2761	1.1				27.1	34.9	48.8	56.6	36.6						
		413.9	3.4	2693	1.2				27.1	34.9	48.8	56.6	36.6						
		388.6	3.6	2529	1.3				25.4	32.6	45.7	52.9	34.3						
		365.8	3.8	2380	1.0				25.4	32.6	45.7	52.9	34.3						
		352.0	4.0	2290	1.3				25.4	32.6	45.7	52.9	34.3						
	PL 2504	1121.1	2.5	3647	0.9	4.0	2.8	80M/2D	29.8	38.3	53.6	62.1	40.2	68	77	59	70	81	348-363
		1052.5	2.7	3424	0.9				27.1	34.9	48.8	56.6	36.6						
		907.3	3.1	2952	0.9				27.1	34.9	48.8	56.6	36.6						
		858.0	3.3	2791	1.1				27.1	34.9	48.8	56.6	36.6						
		805.5	3.5	2621	1.1				27.1	34.9	48.8	56.6	36.6						
		737.7	3.8	2400	1.3				25.4	32.6	45.7	52.9	34.3						
		668.2	4.2	2174	1.3				25.4	32.6	45.7	52.9	34.3						
		612.0	4.6	1991	1.6				23.6	30.4	42.5	49.3	31.9						
		554.4	5.1	1804	1.5				23.6	30.4	42.5	49.3	31.9						
		511.4	5.5	1664	1.7				23.6	30.4	42.5	49.3	31.9						
		468.4	6.0	1524	2.0				21.0	27.0	37.8	43.8	28.4						
		424.3	6.6	1380	2.0				20.1	25.9	36.2	42.0	27.2						
		413.9	6.8	1347	2.2				20.1	25.9	36.2	42.0	27.2						
		388.6	7.2	1264	2.3				20.1	25.9	36.2	42.0	27.2						
		365.8	7.7	1190	1.8				19.3	24.8	34.7	40.2	26.0						
		352.0	8.0	1145	2.3				19.3	24.8	34.7	40.2	26.0						
	PL 1604	576.0	4.9	1874	0.8	1.5	1.1	80M/2D	7.4	9.1	16.2	20.3	12.2	54	56	52	55	59	326-340
		531.3	5.3	1729	0.9				7.4	9.1	16.2	20.3	12.2						
		477.9	5.9	1555	0.9				6.6	8.1	14.4	18.0	10.8						
		440.8	6.4	1434	1.0				6.6	8.1	14.4	18.0	10.8						
		396.4	7.1	1290	1.1				6.3	7.8	13.8	17.3	10.4						
		365.7	7.7	1190	1.2				6.1	7.4	13.2	16.5	9.9						
		337.4	8.3	1098	1.3				6.1	7.4	13.2	16.5	9.9						
	PL 1004	365.7	7.7	1190	0.8	1.5	1.1	80M/2D	6.1	7.4	13.2	16.5	9.9	52	54	50	53	57	304-318
		337.4	8.3	1098	0.8				6.1	7.4	13.2	16.5	9.9						
	PL 16003	330.3	2.7	3465	2.6	15.0	10.5	90L/6D	46.5	82.2	108.5	144.2	34.9	157.5	184.5	125.5	162.5	207.5	428-445

P1 (kW)		iges	n2 (rpm)	M2 (Nm)	fs	Pt (20°C) (kW)	Pt (40°C) (kW)	Motor IE2	FR (kN)					~ Kg					mm
									MC	MS	PC	PS	CPC	M...	P...	F	FS	CPC	
1.10	PL 10003	330.3	2.7	3465	1.8	15.0	10.5	90L/6D	50.4	73.6	-	-	37.8	149.5	-	116.5	154.5	199.5	410-421
		274.1	3.3	2875	2.7				50.4	73.6	-	-	37.8						
		235.4	3.8	2469	2.3				47.1	68.9	-	-	35.3						
		209.7	4.3	2200	2.6				47.1	68.9	-	-	35.3						
	PL 10003	330.3	4.2	2227	2.5	15.0	10.5	90L/4C	47.1	68.9	-	-	35.3	148	-	115	153	198	410-421
	PL 7003	342.6	2.6	3594	1.1	14.0	9.8	90L/6D	-	-	89.1	107.0	66.8	-	112.5	94.5	115.5	129.5	392-400
		283.8	3.2	2977	1.5				-	-	89.1	107.0	66.8						
		244.7	3.7	2567	2.0				-	-	83.4	100.1	62.5						
		216.7	4.2	2273	2.6				-	-	83.4	100.1	62.5						
		194.9	4.6	2044	2.1				-	-	77.6	93.2	58.2						
		174.4	5.2	1829	2.7				-	-	77.6	93.2	58.2						
		155.4	5.8	1630	3.0				-	-	69.0	82.8	51.8						
	PL 7003	342.6	4.1	2310	1.5	14.0	9.8	90L/4C	-	-	83.4	100.1	62.5	-	111	93	114	128	392-400
		283.8	4.9	1914	2.2				-	-	77.6	93.2	58.2						
		244.7	5.7	1650	2.9				-	-	69.0	82.8	51.8						
		194.9	7.2	1314	3.0				-	-	66.1	79.4	49.6						
	PL 7003	342.6	8.2	1155	2.7	14.0	9.8	80M/2D	-	-	63.3	75.9	47.4	-	106	88	109	123	392-400
	PL 5003	302.2	3.0	3170	1.2	10.0	7.0	90L/6D	27.1	34.9	48.8	56.6	36.6	74.5	83.5	65.5	76.5	87.5	370-385
		273.4	3.3	2868	1.1				27.1	34.9	48.8	56.6	36.6						
		235.4	3.8	2469	1.4				25.4	32.6	45.7	52.9	34.3						
		195.3	4.6	2049	1.7				23.6	30.4	42.5	49.3	31.9						
		173.6	5.2	1821	1.6				23.6	30.4	42.5	49.3	31.9						
		162.0	5.6	1699	1.9				21.0	27.0	37.8	43.8	28.4						
		155.9	5.8	1635	2.5				21.0	27.0	37.8	43.8	28.4						
		149.5	6.0	1568	2.1				21.0	27.0	37.8	43.8	28.4						
		129.4	7.0	1357	2.9				20.1	25.9	36.2	42.0	27.2						
	PL 5003	330.3	4.2	2227	1.1	10.0	7.0	90L/4C	25.4	32.6	45.7	52.9	34.3	73	82	64	75	86	370-385
		302.2	4.6	2038	1.7				23.6	30.4	42.5	49.3	31.9						
		273.4	5.1	1844	1.6				23.6	30.4	42.5	49.3	31.9						
		235.4	5.9	1587	2.1				21.0	27.0	37.8	43.8	28.4						
		195.3	7.2	1317	2.4				19.3	24.8	34.7	40.2	26.0						
		173.6	8.1	1171	2.3				19.3	24.8	34.7	40.2	26.0						
		162.0	8.6	1092	2.8				18.4	23.6	33.1	38.3	24.8						
		149.5	9.4	1008	3.0				18.4	23.6	33.1	38.3	24.8						
	PL 5003	330.3	8.5	1114	1.9	10.0	7.0	80M/2D	19.3	24.8	34.7	40.2	26.0	68	77	59	70	81	370-385
		302.2	9.3	1019	3.0				18.4	23.6	33.1	38.3	24.8						
		273.4	10.2	922	2.8				17.5	22.5	31.5	36.5	23.6						
	PL 2503	302.2	3.0	3170	0.8	8.0	5.6	90L/6D	27.1	34.9	48.8	56.6	36.6	68.5	77.5	59.5	70.5	81.5	348-363
		235.4	3.8	2469	1.0				25.4	32.6	45.7	52.9	34.3						
		195.3	4.6	2049	1.2				23.6	30.4	42.5	49.3	31.9						
		173.6	5.2	1821	1.1				23.6	30.4	42.5	49.3	31.9						
		162.0	5.6	1699	1.4				21.0	27.0	37.8	43.8	28.4						
		155.9	5.8	1635	1.7				21.0	27.0	37.8	43.8	28.4						
		149.5	6.0	1568	1.5				21.0	27.0	37.8	43.8	28.4						
		129.4	7.0	1357	2.0				20.1	25.9	36.2	42.0	27.2						
		119.3	7.5	1251	2.1				19.3	24.8	34.7	40.2	26.0						
		99.0	9.1	1038	2.4				18.4	23.6	33.1	38.3	24.8						
		90.7	9.9	951	2.9				17.5	22.5	31.5	36.5	23.6						
		82.1	11.0	861	2.9				17.5	22.5	31.5	36.5	23.6						
	PL 2503	302.2	4.6	2038	1.2	8.0	5.6	90L/4C	23.6	30.4	42.5	49.3	31.9	67	76	58	69	80	348-363
		273.4	5.1	1844	1.1				23.6	30.4	42.5	49.3	31.9						
		235.4	5.9	1587	1.4				21.0	27.0	37.8	43.8	28.4						
		195.3	7.2	1317	1.7				19.3	24.8	34.7	40.2	26.0						
		173.6	8.1	1171	1.6				19.3	24.8	34.7	40.2	26.0						
		162.0	8.6	1092	1.9				18.4	23.6	33.1	38.3	24.8						
		155.9	9.0	1051	2.4				18.4	23.6	33.1	38.3	24.8						
		149.5	9.4	1008	2.1				18.4	23.6	33.1	38.3	24.8						
		129.4	10.8	873	2.8				17.5	22.5	31.5	36.5	23.6						
	PL 2503	424.1	6.6	1430	1.0	8.0	5.6	80M/2D	20.1	25.9	36.2	42.0	27.2	62	71	53	64	75	348-363
		330.3	8.5	1114	1.2				19.3	24.8	34.7	40.2	26.0						
		302.2	9.3	1019	2.1				18.4	23.6	33.1	38.3	24.8						
		273.4	10.2	922	1.9				17.5	22.5	31.5	36.5	23.6						
		235.4	11.9	794	2.6				17.5	22.5	31.5	36.5	23.6						
		195.3	14.3	658	3.0				16.5	21.2	29.6	34.3	22.2						
		173.6	16.1	585	2.8				16.5	21.2	29.6	34.3	22.2						

P1 (kW)		iges	n2 (rpm)	M2 (Nm)	fs	Pt (20°C) (kW)	Pt (40°C) (kW)	Motor IE2	FR (kN)					~ Kg					mm
									MC	MS	PC	PS	CPC	M...	P...	F	FS	CPC	
1.10	PL 1603	172.6	5.2	1810	0.8	5.0	3.5	90L/6D	7.4	9.1	16.2	20.3	12.2	54.5	56.5	52.5	55.5	59.5	326-340
		162.0	5.6	1699	0.9				6.6	8.1	14.4	18.0	10.8						
		134.4	6.7	1410	1.0				6.3	7.8	13.8	17.3	10.4						
		111.5	8.1	1170	1.2				6.1	7.4	13.2	16.5	9.9						
		102.9	8.7	1079	1.3				5.8	7.1	12.6	15.8	9.5						
		85.3	10.6	895	1.5				5.5	6.8	12.0	15.0	9.0						
		78.7	11.4	825	1.6				5.5	6.8	12.0	15.0	9.0						
		70.8	12.7	743	1.7				5.2	6.3	11.3	14.1	8.5						
		65.3	13.8	685	1.8				5.2	6.3	11.3	14.1	8.5						
		54.2	16.6	569	2.2				5.2	6.3	11.3	14.1	8.5						
	PL 1603	208.0	6.7	1403	1.0	5.0	3.5	90L/4C	6.3	7.8	13.8	17.3	10.4	53	55	51	54	58	326-340
		172.6	8.1	1164	1.2				6.1	7.4	13.2	16.5	9.9						
		162.0	8.6	1092	1.2				5.8	7.1	12.6	15.8	9.5						
		134.4	10.4	906	1.5				5.5	6.8	12.0	15.0	9.0						
		111.5	12.6	752	1.7				5.3	6.5	11.6	14.6	8.7						
		102.9	13.6	694	1.8				5.3	6.5	11.6	14.6	8.7						
		85.3	16.4	575	2.1				5.2	6.3	11.3	14.1	8.5						
		78.7	17.8	531	2.3				4.9	6.0	10.7	13.4	8.0						
		70.8	19.8	477	2.5				4.6	5.6	10.0	12.5	7.5						
		65.3	21.4	440	2.7				4.6	5.6	10.0	12.5	7.5						
	PL 1603	327.6	8.5	1104	0.9	5.0	3.5	80M/2D	5.8	7.1	12.6	15.8	9.5	48	50	46	49	53	326-340
		307.5	9.1	1037	0.8				5.8	7.1	12.6	15.8	9.5						
		271.8	10.3	916	1.0				5.5	6.8	12.0	15.0	9.0						
		255.2	11.0	860	1.1				5.5	6.8	12.0	15.0	9.0						
		211.7	13.2	714	1.3				5.2	6.3	11.3	14.1	8.5						
		208.0	13.5	701	1.8				5.2	6.3	11.3	14.1	8.5						
		172.6	16.2	582	2.1				5.2	6.3	11.3	14.1	8.5						
		162.0	17.3	546	2.2				5.2	6.3	11.3	14.1	8.5						
		134.4	20.8	453	2.6				4.6	5.6	10.0	12.5	7.5						
		111.5	25.1	376	3.0				4.3	5.3	9.4	11.7	7.0						
	PL 1003	111.5	8.1	1170	0.8	5.0	3.5	90L/6D	6.1	7.4	13.2	16.5	9.9	52.5	54.5	50.5	53.5	57.5	304-318
		102.9	8.7	1079	0.8				5.8	7.1	12.6	15.8	9.5						
		85.3	10.6	895	1.0				5.5	6.8	12.0	15.0	9.0						
		78.7	11.4	825	1.0				5.5	6.8	12.0	15.0	9.0						
		70.8	12.7	743	1.1				5.2	6.3	11.3	14.1	8.5						
		65.3	13.8	685	1.2				5.2	6.3	11.3	14.1	8.5						
		54.2	16.6	569	1.4				5.2	6.3	11.3	14.1	8.5						
	PL 1003	172.6	8.1	1164	0.8	5.0	3.5	90L/4C	6.1	7.4	13.2	16.5	9.9	51	53	49	52	56	304-318
		162.0	8.6	1092	0.8				5.8	7.1	12.6	15.8	9.5						
		134.4	10.4	906	1.0				5.5	6.8	12.0	15.0	9.0						
		111.5	12.6	752	1.1				5.3	6.5	11.6	14.6	8.7						
		102.9	13.6	694	1.2				5.3	6.5	11.6	14.6	8.7						
		85.3	16.4	575	1.4				5.2	6.3	11.3	14.1	8.5						
		78.7	17.8	531	1.5				4.9	6.0	10.7	13.4	8.0						
		70.8	19.8	477	1.6				4.6	5.6	10.0	12.5	7.5						
		65.3	21.4	440	1.7				4.6	5.6	10.0	12.5	7.5						
		54.2	25.8	365	2.0				4.3	5.3	9.4	11.7	7.0						
	PL 1003	211.7	13.2	714	0.9	5.0	3.5	80M/2D	5.2	6.3	11.3	14.1	8.5	46	48	44	47	51	304-318
		208.0	13.5	701	1.2				5.2	6.3	11.3	14.1	8.5						
		172.6	16.2	582	1.4				5.2	6.3	11.3	14.1	8.5						
		162.0	17.3	546	1.4				5.2	6.3	11.3	14.1	8.5						
		134.4	20.8	453	1.7				4.6	5.6	10.0	12.5	7.5						
		111.5	25.1	376	2.0				4.3	5.3	9.4	11.7	7.0						
		102.9	27.2	347	2.1				4.3	5.3	9.4	11.7	7.0						
		85.3	32.8	288	2.5				3.9	4.7	8.4	10.5	6.3						
		78.7	35.6	265	2.6				3.9	4.7	8.4	10.5	6.3						
		70.8	39.5	239	2.9				3.7	4.5	8.0	10.1	6.0						
	PL 2502	62.8	14.3	683	1.9	12.0	8.4	90L/6D	16.5	21.7	29.6	34.3	22.2	62.5	71.5	54.5	64.5	75.5	348-363
		48.9	18.4	532	2.3				14.5	18.7	26.1	30.3	19.6						
	PL 2502	62.8	22.3	439	2.7	12.0	8.4	90L/4C	14.0	18.0	25.2	29.2	18.9	61	70	53	63	74	348-363
	PL 1602	58.5	15.4	636	1.2	8.0	5.6	90L/6D	5.2	6.3	11.3	14.1	8.5	48.5	50.5	46.5	49.5	53.5	326-340
		45.6	19.7	496	1.4				4.6	5.6	10.0	12.5	7.5						
		37.8	23.8	411	2.0				4.3	5.3	9.4	11.7	7.0						
		31.4	28.7	341	2.3				4.1	5.0	8.9	11.1	6.7						
	PL 1602	58.5	23.9	409	1.6	8.0	5.6	90L/4C	4.3	5.3	9.4	11.7	7.0	47	49	45	48	52	326-340
		45.6	30.7	319	2.0				4.1	5.0	8.9	11.1	6.7						
		37.8	37.0	264	2.9				3.8	4.6	8.2	10.3	6.2						
	PL 1602	58.5	47.9	204	2.9	8.0	5.6	80M/2D	3.5	4.3	7.7	9.6	5.8	42	44	40	43	47	326-340

P1 (kW)		iges	n2 (rpm)	M2 (Nm)	fs	Pt (20°C) (kW)	Pt (40°C) (kW)	Motor IE2	FR (kN)					~ Kg					mm
									MC	MS	PC	PS	CPC	M...	P...	F	FS	CPC	
1.10	PL 1002	58.5	15.4	636	0.8	8.0	5.6	90L/6D	5.2	6.3	11.3	14.1	8.5	46.5	48.5	44.5	47.5	51.5	304-318
		45.6	19.7	496	1.0				4.6	5.6	10.0	12.5	7.5						
		37.8	23.8	411	1.3				4.3	5.3	9.4	11.7	7.0						
		31.4	28.7	341	1.5				4.1	5.0	8.9	11.1	6.7						
		28.9	31.1	314	2.3				4.1	5.0	8.9	11.1	6.7						
		24.0	37.5	261	2.7				3.9	4.7	8.4	10.5	6.3						
	PL 1002	58.5	23.9	409	1.1	8.0	5.6	90L/4C	4.3	5.3	9.4	11.7	7.0	45	47	43	46	50	304-318
		45.6	30.7	319	1.4				4.1	5.0	8.9	11.1	6.7						
		37.8	37.0	264	1.9				3.8	4.6	8.2	10.3	6.2						
		31.4	44.6	219	2.2				3.6	4.4	7.8	9.8	5.9						
	PL 1002	58.5	47.9	204	2.0	8.0	5.6	80M/2D	3.5	4.3	7.7	9.6	5.8	40	42	38	41	45	304-318
		45.6	61.4	159	2.5				3.2	4.0	7.1	8.9	5.3						
	PL 1001	8.67	103.8	98	2.4	12.0	8.4	90L/6D	2.8	3.4	6.1	7.7	4.6	40.5	42.5	38.5	41.5	45.5	304-318
1.50	PL 50004	1982.0	0.5	27357	1.8	20.0	14.0	100L/6D	178.0	246.0	-	-	133.5	435	-	377	390	543	536-549
		1672.3	0.5	23082	2.5				178.0	246.0	-	-	133.5						
		1387.4	0.6	19150	3.0				178.0	246.0	-	-	133.5						
		1258.4	0.7	17369	2.6				178.0	246.0	-	-	133.5						
	PL 50004	1982.0	0.7	17587	2.5	20.0	14.0	90L/4D	178.0	246.0	-	-	133.5	426	-	368	381	534	536-549
	PL 35004	1289.7	0.7	17801	2.2	17.0	11.9	100L/6D	144.0	204.0	-	-	108.0	303	-	267	275	366	516-529
		1067.3	0.8	14732	2.6				144.0	204.0	-	-	108.0						
		987.0	0.9	13623	2.8				144.0	204.0	-	-	108.0						
	PL 30004	1425.1	0.6	19670	1.5	17.0	11.9	100L/6D	90.0	137.0	-	-	67.5	297	-	256	264	360	496-509
		1015.5	0.9	14017	2.0				90.0	137.0	-	-	67.5						
	PL 30004	1425.1	1.0	12645	2.2	17.0	11.9	90L/4D	90.0	137.0	-	-	67.5	288	-	247	255	351	496-509
		1015.5	1.4	9011	2.9				90.0	137.0	-	-	67.5						
	PL 25004	1774.0	0.5	24486	1.0	15.0	10.5	100L/6D	90.0	137.0	-	-	67.5	264	-	228	236	325	476-489
		1529.3	0.6	21108	1.1				90.0	137.0	-	-	67.5						
		1476.0	0.6	20373	1.5				90.0	137.0	-	-	67.5						
		1354.5	0.7	18696	1.2				90.0	137.0	-	-	67.5						
		1272.4	0.7	17562	1.7				90.0	137.0	-	-	67.5						
		1126.9	0.8	15554	1.9				90.0	137.0	-	-	67.5						
		1013.4	0.9	13988	2.0				90.0	137.0	-	-	67.5						
		934.9	1.0	12904	2.2				90.0	137.0	-	-	67.5						
		873.6	1.0	12058	2.3				90.0	137.0	-	-	67.5						
		803.1	1.1	11085	2.5				90.0	137.0	-	-	67.5						
		752.3	1.2	10384	2.6				90.0	137.0	-	-	67.5						
	PL 25004	1774.0	0.8	15741	1.4	15.0	10.5	90L/4D	90.0	137.0	-	-	67.5	255	-	219	227	316	476-489
		1529.3	0.9	13570	1.6				90.0	137.0	-	-	67.5						
		1476.0	0.9	13097	2.2				90.0	137.0	-	-	67.5						
		1354.5	1.0	12019	1.8				90.0	137.0	-	-	67.5						
		1272.4	1.1	11290	2.4				90.0	137.0	-	-	67.5						
		1126.9	1.2	9999	2.7				90.0	137.0	-	-	67.5						
		1013.4	1.4	8992	2.9				90.0	137.0	-	-	67.5						
	PL 25004	1774.0	1.6	7870	2.5	15.0	10.5	90L/2C	76.5	116.5	-	-	57.4	254.5	-	218.5	226.5	315.5	476-489
		1529.3	1.8	6785	2.8				76.5	116.5	-	-	57.4						
	PL 18004	1216.4	0.7	16790	1.2	13.0	9.1	100L/6D	60.0	106.0	140.0	186.0	45.0	185	212	154	190	235	452-469
		1113.0	0.8	15362	1.3				60.0	106.0	140.0	186.0	45.0						
		987.4	0.9	13629	1.4				60.0	106.0	140.0	186.0	45.0						
		928.8	1.0	12820	1.5				60.0	106.0	140.0	186.0	45.0						
		849.8	1.1	11729	1.6				60.0	106.0	140.0	186.0	45.0						
		818.8	1.1	11302	1.8				60.0	106.0	140.0	186.0	45.0						
		770.5	1.2	10635	1.9				60.0	106.0	140.0	186.0	45.0						
		720.0	1.3	9938	2.0				60.0	106.0	140.0	186.0	45.0						
		677.9	1.3	9357	2.1				60.0	106.0	140.0	186.0	45.0						
		620.0	1.5	8558	2.3				60.0	106.0	140.0	186.0	45.0						
		549.1	1.6	7579	2.6				51.0	90.1	119.0	158.1	38.3						
		489.2	1.8	6752	2.8				51.0	90.1	119.0	158.1	38.3						
	PL 18004	1216.4	1.2	10793	1.7	13.0	9.1	90L/4D	60.0	106.0	140.0	186.0	45.0	176	203	145	181	226	452-469
		1113.0	1.3	9876	1.8				60.0	106.0	140.0	186.0	45.0						
		987.4	1.4	8761	2.0				60.0	106.0	140.0	186.0	45.0						
		928.8	1.5	8241	2.1				51.0	90.1	119.0	158.1	38.3						
		849.8	1.6	7540	2.2				51.0	90.1	119.0	158.1	38.3						
		818.8	1.7	7265	2.7				51.0	90.1	119.0	158.1	38.3						
		770.5	1.8	6837	2.8				51.0	90.1	119.0	158.1	38.3						
		720.0	1.9	6389	2.9				51.0	90.1	119.0	158.1	38.3						
	PL 18004	1216.4	2.3	5397	2.9	13.0	9.1	90L/2C	51.0	90.1	119.0	158.1	38.3	175.5	202.5	144.5	180.5	225.5	452-469

P1 (kW)		iges	n2 (rpm)	M2 (Nm)	fs	Pt (20°C) (kW)	Pt (40°C) (kW)	Motor IE2	FR (kN)					~ Kg					mm
									MC	MS	PC	PS	CPC	M...	P...	F	FS	CPC	
1.50	PL 16004	1270.1	0.7	17531	0.9	11.0	7.7	100L/6D	60.0	106.0	140.0	186.0	45.0	171	198	140	176	221	428-445
		1093.7	0.8	15096	1.0				60.0	106.0	140.0	186.0	45.0						
		1008.9	0.9	13925	1.4				60.0	106.0	140.0	186.0	45.0						
		907.3	1.0	12523	1.1				60.0	106.0	140.0	186.0	45.0						
		806.4	1.1	11130	1.2				60.0	106.0	140.0	186.0	45.0						
		724.4	1.2	9999	1.4				60.0	106.0	140.0	186.0	45.0						
		640.5	1.4	8841	2.0				60.0	106.0	140.0	186.0	45.0						
		612.0	1.5	8447	2.0				60.0	106.0	140.0	186.0	45.0						
		576.1	1.6	7952	1.6				51.0	90.1	119.0	158.1	38.3						
		554.4	1.6	7652	2.5				51.0	90.1	119.0	158.1	38.3						
		531.4	1.7	7335	2.3				51.0	90.1	119.0	158.1	38.3						
		507.7	1.8	7008	2.7				51.0	90.1	119.0	158.1	38.3						
		459.9	2.0	6348	2.9				51.0	90.1	119.0	158.1	38.3						
		440.9	2.0	6086	2.7				51.0	90.1	119.0	158.1	38.3						
	PL 16004	1849.8	0.8	16413	0.9	11.0	7.7	90L/4D	60.0	106.0	140.0	186.0	45.0	162	189	131	167	212	428-445
		1530.9	0.9	13584	1.1				60.0	106.0	140.0	186.0	45.0						
		1270.1	1.1	11270	1.2				60.0	106.0	140.0	186.0	45.0						
		1093.7	1.3	9705	1.4				60.0	106.0	140.0	186.0	45.0						
		1008.9	1.4	8952	1.9				60.0	106.0	140.0	186.0	45.0						
		907.3	1.5	8051	1.6				51.0	90.1	119.0	158.1	38.3						
		806.4	1.7	7155	1.8				51.0	90.1	119.0	158.1	38.3						
		724.4	1.9	6428	1.9				51.0	90.1	119.0	158.1	38.3						
		640.5	2.2	5683	2.8				51.0	90.1	119.0	158.1	38.3						
		612.0	2.3	5430	2.9				51.0	90.1	119.0	158.1	38.3						
		576.1	2.4	5112	2.3				51.0	90.1	119.0	158.1	38.3						
	PL 16004	2229.7	1.3	9892	1.0	11.0	7.7	90L/2C	60.0	106.0	140.0	186.0	45.0	161.5	188.5	130.5	166.5	211.5	428-445
		1849.8	1.5	8207	1.6				51.0	90.1	119.0	158.1	38.3						
		1530.9	1.8	6792	1.8				51.0	90.1	119.0	158.1	38.3						
		1270.1	2.2	5635	2.2				51.0	90.1	119.0	158.1	38.3						
		1093.7	2.6	4852	2.4				46.5	82.2	108.5	144.2	34.9						
		907.3	3.1	4025	2.9				46.5	82.2	108.5	144.2	34.9						
	PL 10004	1008.9	0.9	13925	0.9	11.0	7.7	100L/6D	65.0	95.0	-	-	48.8	163	-	130	168	213	410-421
		907.3	1.0	12523	0.8				65.0	95.0	-	-	48.8						
		806.4	1.1	11130	0.8				65.0	95.0	-	-	48.8						
		724.4	1.2	9999	0.9				65.0	95.0	-	-	48.8						
		640.5	1.4	8841	1.3				65.0	95.0	-	-	48.8						
		612.0	1.5	8447	1.4				65.0	95.0	-	-	48.8						
		576.1	1.6	7952	1.1				55.3	80.8	-	-	41.4						
		554.4	1.6	7652	1.7				55.3	80.8	-	-	41.4						
		531.4	1.7	7335	1.5				55.3	80.8	-	-	41.4						
		507.7	1.8	7008	1.8				55.3	80.8	-	-	41.4						
		459.9	2.0	6348	2.0				55.3	80.8	-	-	41.4						
		440.9	2.0	6086	1.8				55.3	80.8	-	-	41.4						
		421.2	2.1	5814	2.2				55.3	80.8	-	-	41.4						
		388.6	2.3	5364	2.3				55.3	80.8	-	-	41.4						
		352.0	2.6	4859	2.5				50.4	73.6	-	-	37.8						
	PL 10004	1270.1	1.1	11270	0.8	11.0	7.7	90L/4D	65.0	95.0	-	-	48.8	154	-	121	159	204	410-421
		1093.7	1.3	9705	0.9				65.0	95.0	-	-	48.8						
		1008.9	1.4	8952	1.3				65.0	95.0	-	-	48.8						
		907.3	1.5	8051	1.1				55.3	80.8	-	-	41.4						
		806.4	1.7	7155	1.2				55.3	80.8	-	-	41.4						
		724.4	1.9	6428	1.3				55.3	80.8	-	-	41.4						
		640.5	2.2	5683	1.9				55.3	80.8	-	-	41.4						
		612.0	2.3	5430	2.0				55.3	80.8	-	-	41.4						
		576.1	2.4	5112	1.6				55.3	80.8	-	-	41.4						
		554.4	2.5	4919	2.5				50.4	73.6	-	-	37.8						
		531.4	2.6	4715	2.2				50.4	73.6	-	-	37.8						
		507.7	2.8	4505	2.7				50.4	73.6	-	-	37.8						
		459.9	3.0	4081	2.9				50.4	73.6	-	-	37.8						
		440.9	3.2	3912	2.6				50.4	73.6	-	-	37.8						
	PL 10004	1849.8	1.5	8207	1.1	11.0	7.7	90L/2C	55.3	80.8	-	-	41.4	153.5	-	120.5	158.5	203.5	410-421
		1530.9	1.8	6792	1.3				55.3	80.8	-	-	41.4						
		1270.1	2.2	5635	1.5				55.3	80.8	-	-	41.4						
		1093.7	2.6	4852	1.7				50.4	73.6	-	-	37.8						
		1008.9	2.8	4476	2.3				50.4	73.6	-	-	37.8						
		907.3	3.1	4025	2.0				50.4	73.6	-	-	37.8						
		806.4	3.5	3578	2.1				50.4	73.6	-	-	37.8						
		724.4	3.9	3214	2.3				47.1	68.9	-	-	35.3						
		576.1	4.9	2556	2.8				43.9	64.1	-	-	32.9						

P1 (kW)		iges	n2 (rpm)	M2 (Nm)	fs	Pt (20°C) (kW)	Pt (40°C) (kW)	Motor IE2	FR (kN) MC	MS	PC	PS	CPC	~ Kg M…	P…	F	FS	CPC	mm
1.50	PL 7004	661.9	1.4	9136	0.8	8.0	5.6	100L/6D	-	-	115.0	138.0	86.3	-	126	108	129	143	392-400
		632.4	1.4	8729	0.8				-	-	115.0	138.0	86.3						
		571.7	1.6	7891	1.0				-	-	97.8	117.3	73.3						
		523.6	1.7	7227	1.0				-	-	97.8	117.3	73.3						
		474.3	1.9	6547	1.1				-	-	97.8	117.3	73.3						
		434.4	2.1	5996	1.2				-	-	97.8	117.3	73.3						
		400.7	2.2	5531	1.3				-	-	97.8	117.3	73.3						
		347.9	2.6	4802	1.4				-	-	89.1	107.0	66.8						
		332.4	2.7	4588	1.5				-	-	89.1	107.0	66.8						
		301.1	3.0	4156	1.6				-	-	89.1	107.0	66.8						
	PL 7004	870.0	1.6	7720	0.8	8.0	5.6	90L/4D	-	-	97.8	117.3	73.3	-	117	99	120	134	392-400
		832.3	1.7	7385	0.9				-	-	97.8	117.3	73.3						
		768.7	1.8	6821	1.0				-	-	97.8	117.3	73.3						
		747.3	1.9	6631	0.9				-	-	97.8	117.3	73.3						
		661.9	2.1	5873	1.1				-	-	97.8	117.3	73.3						
		632.4	2.2	5611	1.2				-	-	97.8	117.3	73.3						
		571.7	2.4	5073	1.4				-	-	97.8	117.3	73.3						
		523.6	2.7	4646	1.5				-	-	89.1	107.0	66.8						
		474.3	3.0	4209	1.6				-	-	89.1	107.0	66.8						
		434.4	3.2	3854	1.7				-	-	89.1	107.0	66.8						
		400.7	3.5	3555	1.8				-	-	89.1	107.0	66.8						
		347.9	4.0	3087	2.1				-	-	83.4	100.1	62.5						
		332.4	4.2	2949	2.2				-	-	83.4	100.1	62.5						
		301.1	4.6	2672	2.4				-	-	77.6	93.2	58.2						
	PL 7004	1651.6	1.7	7327	0.8	8.0	5.6	90L/2C	-	-	97.8	117.3	73.3	-	116.5	98.5	119.5	133.5	392-400
		1366.9	2.0	6064	1.0				-	-	97.8	117.3	73.3						
		1177.0	2.4	5222	1.1				-	-	97.8	117.3	73.3						
		1048.7	2.7	4653	1.2				-	-	89.1	107.0	66.8						
		976.5	2.9	4332	1.3				-	-	89.1	107.0	66.8						
		870.0	3.2	3860	1.4				-	-	89.1	107.0	66.8						
		832.3	3.4	3693	1.6				-	-	89.1	107.0	66.8						
		768.7	3.6	3410	1.7				-	-	83.4	100.1	62.5						
		747.3	3.7	3315	1.6				-	-	83.4	100.1	62.5						
		661.9	4.2	2937	2.0				-	-	83.4	100.1	62.5						
		632.4	4.4	2806	2.1				-	-	83.4	100.1	62.5						
		571.7	4.9	2536	2.4				-	-	77.6	93.2	58.2						
		523.6	5.3	2323	2.6				-	-	77.6	93.2	58.2						
		474.3	5.9	2104	2.9				-	-	69.0	82.8	51.8						
	PL 5004	468.4	1.9	6465	0.8	6.0	4.2	100L/6D	29.8	34.9	53.6	62.1	40.2	88	97	79	90	101	370-385
		424.3	2.1	5856	0.8				29.8	38.3	53.6	62.1	40.2						
		413.9	2.2	5713	0.9				29.8	38.3	53.6	62.1	40.2						
		388.6	2.3	5364	1.0				29.8	38.3	53.6	62.1	40.2						
		365.8	2.5	5049	0.8				29.8	38.3	53.6	62.1	40.2						
		352.0	2.6	4859	0.9				27.1	38.3	48.8	56.6	36.6						
	PL 5004	737.7	1.9	6546	0.8	6.0	4.2	90L/4D	29.8	38.3	53.6	62.1	40.2	79	88	70	81	92	370-385
		668.2	2.1	5929	0.8				29.8	38.3	53.6	62.1	40.2						
		612.0	2.3	5430	0.9				29.8	38.3	53.6	62.1	40.2						
		554.4	2.5	4919	0.9				27.1	34.9	48.8	56.6	36.6						
		511.4	2.7	4538	1.0				27.1	34.9	48.8	56.6	36.6						
		468.4	3.0	4156	1.2				27.1	34.9	48.8	56.6	36.6						
		424.3	3.3	3765	1.2				27.1	34.9	48.8	56.6	36.6						
		413.9	3.4	3673	1.3				27.1	34.9	48.8	56.6	36.6						
		388.6	3.6	3448	1.4				25.4	32.6	45.7	52.9	34.3						
		365.8	3.8	3246	1.1				25.4	32.6	45.7	52.9	34.3						
		352.0	4.0	3123	1.4				25.4	32.6	45.7	52.9	34.3						
	PL 5004	1121.1	2.5	4974	0.9	6.0	4.2	90L/2C	29.8	38.3	53.6	62.1	40.2	78.5	87.5	69.5	80.5	91.5	370-385
		1052.5	2.7	4669	1.0				27.1	34.9	48.8	56.6	36.6						
		907.3	3.1	4025	0.9				27.1	34.9	48.8	56.6	36.6						
		858.0	3.3	3807	1.2				27.1	34.9	48.8	56.6	36.6						
		805.5	3.5	3574	1.2				27.1	34.9	48.8	56.6	36.6						
		737.7	3.8	3273	1.4				25.4	32.6	45.7	52.9	34.3						
		668.2	4.2	2965	1.4				25.4	32.6	45.7	52.9	34.3						
		612.0	4.6	2715	1.7				23.6	30.4	42.5	49.3	31.9						
		554.4	5.1	2460	1.7				23.6	30.4	42.5	49.3	31.9						
		511.4	5.5	2269	1.8				23.6	30.4	42.5	49.3	31.9						
		468.4	6.0	2078	2.1				21.0	27.0	37.8	43.8	28.4						
		424.3	6.6	1882	2.1				20.1	25.9	36.2	42.0	27.2						
		413.9	6.8	1836	2.3				20.1	25.9	36.2	42.0	27.2						
		388.6	7.2	1724	2.5				20.1	25.9	36.2	42.0	27.2						
		365.8	7.7	1623	1.9				19.3	24.8	34.7	40.2	26.0						
		352.0	8.0	1562	2.4				19.3	24.8	34.7	40.2	26.0						

P1 (kW)		iges	n2 (rpm)	M2 (Nm)	fs	Pt (20°C) (kW)	Pt (40°C) (kW)	Motor IE2	FR (kN)					~ Kg					mm
									MC	MS	PC	PS	CPC	M...	P...	F	FS	CPC	
1.50	PL 2504	468.4	3.0	4156	0.8	4.0	2.8	90L/4D	27.1	34.9	48.8	56.6	36.6	73	82	64	75	86	348-363
		424.3	3.3	3765	0.8				27.1	34.9	48.8	56.6	36.6						
		413.9	3.4	3673	0.9				27.1	34.9	48.8	56.6	36.6						
		388.6	3.6	3448	0.9				25.4	32.6	45.7	52.9	34.3						
		365.8	3.8	3246	0.8				25.4	32.6	45.7	52.9	34.3						
		352.0	4.0	3123	0.9				25.4	32.6	45.7	52.9	34.3						
	PL 2504	858.0	3.3	3807	0.8	4.0	2.8	90L/2C	27.1	34.9	48.8	56.6	36.6	72.5	81.5	63.5	74.5	85.5	348-363
		805.5	3.5	3574	0.8				27.1	34.9	48.8	56.6	36.6						
		737.7	3.8	3273	1.0				25.4	32.6	45.7	52.9	34.3						
		668.2	4.2	2965	1.0				25.4	32.6	45.7	52.9	34.3						
		612.0	4.6	2715	1.2				23.6	30.4	42.5	49.3	31.9						
		554.4	5.1	2460	1.1				23.6	30.4	42.5	49.3	31.9						
		511.4	5.5	2269	1.2				23.6	30.4	42.5	49.3	31.9						
		468.4	6.0	2078	1.5				21.0	27.0	37.8	43.8	28.4						
		424.3	6.6	1882	1.4				20.1	25.9	36.2	42.0	27.2						
		413.9	6.8	1836	1.6				20.1	25.9	36.2	42.0	27.2						
		388.6	7.2	1724	1.7				20.1	25.9	36.2	42.0	27.2						
		365.8	7.7	1623	1.3				19.3	24.8	34.7	40.2	26.0						
		352.0	8.0	1562	1.7				19.3	24.8	34.7	40.2	26.0						
	PL 1604	396.4	7.1	1759	0.8	1.5	1.1	90L/2C	6.3	7.8	13.8	17.3	10.4	58.5	60.5	56.5	59.5	63.5	326-340
		365.7	7.7	1622	0.9				6.1	7.4	13.2	16.5	9.9						
		337.4	8.3	1497	0.9				6.1	7.4	13.2	16.5	9.9						
	PL 16003	330.3	2.7	4724	1.9	15.0	10.5	100L/6D	46.5	82.2	108.5	144.2	32.6	165	192	133	170	215	428-445
		274.1	3.3	3921	2.9				46.5	82.2	108.5	144.2	32.6						
		235.4	3.8	3367	2.5				43.5	76.9	101.5	134.9	34.9						
		209.7	4.3	2999	2.7				43.5	76.9	101.5	134.9	34.9						
	PL 16003	330.3	4.2	3037	2.7	15.0	10.5	90L/4D	43.5	76.9	101.5	134.9	32.6	156	183	124	161	206	428-445
	PL 10003	330.3	2.7	4724	1.3	15.0	10.5	100L/6D	50.4	73.6	-	-	37.8	157	-	124	162	207	410-421
		274.1	3.3	3921	2.0				50.4	73.6	-	-	37.8						
		235.4	3.8	3367	1.7				47.1	68.9	-	-	35.3						
		226.8	4.0	3244	2.3				47.1	68.9	-	-	35.3						
		209.7	4.3	2999	1.9				47.1	68.9	-	-	35.3						
		195.3	4.6	2793	2.6				43.9	64.1	-	-	32.9						
		188.2	4.8	2692	2.7				43.9	64.1	-	-	32.9						
	PL 10003	330.3	4.2	3037	1.9	15.0	10.5	90L/4D	47.1	68.9	-	-	35.3	148	-	115	153	198	410-421
		274.1	5.1	2520	2.8				43.9	64.1	-	-	32.9						
		235.4	5.9	2164	2.5				39.0	57.0	-	-	29.3						
		209.7	6.7	1928	2.7				37.4	54.6	-	-	28.0						
	PL 7003	342.6	2.6	4900	0.8	14.0	9.8	100L/6D	-	-	89.1	107.0	66.8	-	120	102	123	137	392-400
		283.8	3.2	4059	1.1				-	-	89.1	107.0	66.8						
		244.7	3.7	3500	1.5				-	-	83.4	100.1	62.5						
		216.7	4.2	3100	1.9				-	-	83.4	100.1	62.5						
		194.9	4.6	2788	1.5				-	-	77.6	93.2	58.2						
		174.4	5.2	2494	2.0				-	-	77.6	93.2	58.2						
		155.4	5.8	2223	2.2				-	-	69.0	82.8	51.8						
		148.8	6.0	2128	2.6				-	-	69.0	82.8	51.8						
		139.2	6.5	1991	2.4				-	-	69.0	82.8	51.8						
	PL 7003	342.6	4.1	3150	1.1	14.0	9.8	90L/4D	-	-	83.4	100.1	62.5	-	111	93	114	128	392-400
		283.8	4.9	2610	1.6				-	-	77.6	93.2	58.2						
		244.7	5.7	2250	2.2				-	-	69.0	82.8	51.8						
		216.7	6.5	1993	2.7				-	-	69.0	82.8	51.8						
		194.9	7.2	1792	2.2				-	-	66.1	79.4	49.6						
		174.4	8.0	1604	2.9				-	-	63.3	75.9	47.4						
	PL 7003	342.6	8.2	1575	2.0	14.0	9.8	90L/2C	-	-	63.3	75.9	47.4	-	110.5	92.5	113.5	127.5	392-400
		283.8	9.9	1305	2.9				-	-	57.5	69.0	43.1						
	PL 5003	302.2	3.0	4322	0.9	10.0	7.0	100L/6D	27.1	34.9	33.1	56.6	36.6	82	91	73	84	95	370-385
		273.4	3.3	3911	0.8				27.1	34.9	34.7	56.6	36.6						
		235.4	3.8	3367	1.0				25.4	32.6	36.2	52.9	34.3						
		195.3	4.6	2793	1.2				23.6	30.4	37.8	49.3	31.9						
		173.6	5.2	2483	1.2				23.6	30.4	37.8	49.3	31.9						
		162.0	5.6	2317	1.4				21.0	27.0	37.8	43.8	28.4						
		155.9	5.8	2230	1.8				21.0	27.0	42.5	43.8	28.4						
		149.5	6.0	2138	1.5				21.0	27.0	42.5	43.8	28.4						
		129.4	7.0	1851	2.1				20.1	25.9	45.7	42.0	27.2						
		119.3	7.5	1706	2.3				19.3	24.8	48.8	40.2	26.0						
		99.0	9.1	1416	2.6				18.4	23.6	48.8	38.3	24.8						

P1 (kW)		iges	n2 (rpm)	M2 (Nm)	fs	Pt (20°C) (kW)	Pt (40°C) (kW)	Motor IE2	FR (kN)					~ Kg					mm
									MC	MS	PC	PS	CPC	M...	P...	F	FS	CPC	
1.50	PL 5003	330.3	4.2	3037	0.8	10.0	7.0	90L/4D	25.4	32.6	45.7	52.9	34.3	73	82	64	75	86	370-385
		302.2	4.6	2779	1.2				23.6	30.4	42.5	49.3	31.9						
		273.4	5.1	2514	1.2				23.6	30.4	42.5	49.3	31.9						
		235.4	5.9	2164	1.5				21.0	27.0	37.8	43.8	28.4						
		195.3	7.2	1796	1.8				19.3	24.8	34.7	40.2	26.0						
		173.6	8.1	1596	1.7				19.3	24.8	34.7	40.2	26.0						
		162.0	8.6	1490	2.1				18.4	23.6	33.1	38.3	24.8						
		155.9	9.0	1433	2.6				18.4	23.6	33.1	38.3	24.8						
		149.5	9.4	1375	2.2				18.4	23.6	33.1	38.3	24.8						
	PL 5003	330.3	8.5	1519	1.4	10.0	7.0	90L/2C	19.3	24.8	34.7	40.2	26.0	72.5	81.5	63.5	74.5	85.5	370-385
		302.2	9.3	1389	2.2				18.4	23.6	33.1	38.3	24.8						
		273.4	10.2	1257	2.1				17.5	22.5	31.5	36.5	23.6						
		235.4	11.9	1082	2.7				17.5	22.5	31.5	36.5	23.6						
	PL 2503	195.3	4.6	2793	0.9	8.0	5.6	100L/6D	23.6	30.4	42.5	49.3	31.9	76	85	67	78	89	348-363
		173.6	5.2	2483	0.8				23.6	30.4	42.5	49.3	31.9						
		162.0	5.6	2317	1.0				21.0	27.0	37.8	43.8	28.4						
		155.9	5.8	2230	1.2				21.0	27.0	37.8	43.8	28.4						
		149.5	6.0	2138	1.1				21.0	27.0	37.8	43.8	28.4						
		129.4	7.0	1851	1.4				20.1	25.9	36.2	42.0	27.2						
		119.3	7.5	1706	1.5				19.3	24.8	34.7	40.2	26.0						
		99.0	9.1	1416	1.8				18.4	23.6	33.1	38.3	24.8						
		90.7	9.9	1297	2.1				17.5	22.5	31.5	36.5	23.6						
		82.1	11.0	1174	2.1				17.5	22.5	31.5	36.5	23.6						
		75.2	12.0	1076	2.5				17.5	22.5	31.5	36.5	23.6						
		62.9	14.3	900	2.6				16.5	21.2	29.6	34.3	22.2						
	PL 2503	302.2	4.6	2779	0.9	8.0	5.6	90L/4D	23.6	30.4	42.5	49.3	31.9	67	76	58	69	80	348-363
		273.4	5.1	2514	0.8				23.6	30.4	42.5	49.3	31.9						
		235.4	5.9	2164	1.1				21.0	27.0	37.8	43.8	28.4						
		195.3	7.2	1796	1.2				19.3	24.8	34.7	40.2	26.0						
		173.6	8.1	1596	1.1				19.3	24.8	34.7	40.2	26.0						
		162.0	8.6	1490	1.4				18.4	23.6	33.1	38.3	24.8						
		155.9	9.0	1433	1.8				18.4	23.6	33.1	38.3	24.8						
		149.5	9.4	1375	1.5				18.4	23.6	33.1	38.3	24.8						
		129.4	10.8	1190	2.1				17.5	22.5	31.5	36.5	23.6						
		119.3	11.7	1097	2.3				17.5	22.5	31.5	36.5	23.6						
		99.0	14.1	910	2.6				16.5	21.2	29.6	34.3	22.2						
		82.1	17.1	755	3.0				15.6	20.0	28.0	32.5	21.0						
	PL 2503	330.3	8.5	1519	0.9	8.0	5.6	90L/2C	19.3	24.8	34.7	40.2	26.0	66.5	75.5	57.5	68.5	79.5	348-363
		302.2	9.3	1389	1.5				18.4	23.6	33.1	38.3	24.8						
		273.4	10.2	1257	1.4				17.5	22.5	31.5	36.5	23.6						
		235.4	11.9	1082	1.9				17.5	22.5	31.5	36.5	23.6						
		195.3	14.3	898	2.2				16.5	21.2	29.6	34.3	22.2						
		173.6	16.1	798	2.0				16.5	21.2	29.6	34.3	22.2						
		162.0	17.3	745	2.6				16.5	21.2	29.6	34.3	22.2						
		149.5	18.7	687	2.7				14.5	18.7	26.1	30.3	19.6						
	PL 1603	208.0	6.7	1913	0.8	5.0	3.5	90L/4D	6.3	7.8	13.8	17.3	10.4	53	55	51	54	58	326-340
		172.6	8.1	1587	0.9				6.1	7.4	13.2	16.5	9.9						
		162.0	8.6	1490	0.9				5.8	7.1	12.6	15.8	9.5						
		134.4	10.4	1236	1.1				5.5	6.8	12.0	15.0	9.0						
		111.5	12.6	1025	1.3				5.3	6.5	11.6	14.6	8.7						
		102.9	13.6	946	1.3				5.3	6.5	11.6	14.6	8.7						
		85.3	16.4	784	1.6				5.2	6.3	11.3	14.1	8.5						
		78.7	17.8	724	1.7				4.9	6.0	10.7	13.4	8.0						
		70.8	19.8	651	1.8				4.6	5.6	10.0	12.5	7.5						
		65.3	21.4	600	1.9				4.6	5.6	10.0	12.5	7.5						
		54.2	25.8	498	2.3				4.3	5.3	9.4	11.7	7.0						
	PL 1603	111.5	8.1	1595	0.9	5.0	3.5	100L/6D	6.1	7.4	13.2	16.5	9.9	62	64	60	63	67	326-340
		102.9	8.7	1472	0.9				5.8	7.1	12.6	15.8	9.5						
		85.3	10.6	1220	1.1				5.5	6.8	12.0	15.0	9.0						
		78.7	11.4	1126	1.2				5.5	6.8	12.0	15.0	9.0						
		70.8	12.7	1013	1.3				5.2	6.3	11.3	14.1	8.5						
		65.3	13.8	934	1.4				5.2	6.3	11.3	14.1	8.5						
		54.2	16.6	775	1.6				5.2	6.3	11.3	14.1	8.5						
	PL 1603	271.8	10.3	1250	0.8	5.0	3.5	90L/2C	5.5	6.8	12.0	15.0	9.0	52.5	54.5	50.5	53.5	57.5	326-340
		255.2	11.0	1173	0.8				5.5	6.8	12.0	15.0	9.0						
		211.7	13.2	973	0.9				5.2	6.3	11.3	14.1	8.5						
		208.0	13.5	956	1.3				5.2	6.3	11.3	14.1	8.5						
		172.6	16.2	794	1.6				5.2	6.3	11.3	14.1	8.5						
		162.0	17.3	745	1.6				5.2	6.3	11.3	14.1	8.5						
		134.4	20.8	618	1.9				4.6	5.6	10.0	12.5	7.5						
		111.5	25.1	513	2.2				4.3	5.3	9.4	11.7	7.0						
		102.9	27.2	473	2.4				4.3	5.3	9.4	11.7	7.0						
		85.3	32.8	392	2.8				3.9	4.7	8.4	10.5	6.3						
		78.7	35.6	362	3.0				3.9	4.7	8.4	10.5	6.3						

P1 (kW)		iges	n2 (rpm)	M2 (Nm)	fs	Pt (20°C) (kW)	Pt (40°C) (kW)	Motor IE2	FR (kN)					~ Kg					mm
									MC	MS	PC	PS	CPC	M...	P...	F	FS	CPC	
1.50	PL 1003	78.7	11.4	1126	0.8	5.0	3.5	100L/6D	5.5	6.8	12.0	15.0	9.0	60	62	58	61	65	304-318
		70.8	12.7	1013	0.8				5.2	6.3	11.3	14.1	8.5						
		65.3	13.8	934	0.9				5.2	6.3	11.3	14.1	8.5						
		54.2	16.6	775	1.0				5.2	6.3	11.3	14.1	8.5						
	PL 1003	111.5	12.6	1025	0.8	5.0	3.5	90L/4D	5.3	6.5	11.6	14.6	8.7	51	53	49	52	56	304-318
		102.9	13.6	946	0.9				5.3	6.5	11.6	14.6	8.7						
		85.3	16.4	784	1.0				5.2	6.3	11.3	14.1	8.5						
		78.7	17.8	724	1.1				4.9	6.0	10.7	13.4	8.0						
		70.8	19.8	651	1.2				4.6	5.6	10.0	12.5	7.5						
		65.3	21.4	600	1.3				4.6	5.6	10.0	12.5	7.5						
		54.2	25.8	498	1.5				4.3	5.3	9.4	11.7	7.0						
	PL 1003	208.0	13.5	956	0.9	5.0	3.5	90L/2C	5.2	6.3	11.3	14.1	8.5	50.5	52.5	48.5	51.5	55.5	304-318
		172.6	16.2	794	1.0				5.2	6.3	11.3	14.1	8.5						
		162.0	17.3	745	1.1				5.2	6.3	11.3	14.1	8.5						
		134.4	20.8	618	1.2				4.6	5.6	10.0	12.5	7.5						
		111.5	25.1	513	1.4				4.3	5.3	9.4	11.7	7.0						
		102.9	27.2	473	1.5				4.3	5.3	9.4	11.7	7.0						
		85.3	32.8	392	1.8				3.9	4.7	8.4	10.5	6.3						
		78.7	35.6	362	1.9				3.9	4.7	8.4	10.5	6.3						
		70.8	39.5	326	2.1				3.7	4.5	8.0	10.1	6.0						
		65.3	42.9	300	2.3				3.6	4.4	7.8	9.8	5.9						
		54.2	51.7	249	2.6				3.5	4.3	7.7	9.6	5.8						
	PL 5002	48.9	18.4	725	2.6	15.0	10.5	100L/6D	14.5	18.7	26.1	30.3	19.6	76	85	67	78	89	370-385
	PL 2502	62.8	14.3	931	1.4	12.0	8.4	100L/6D	16.5	21.2	29.6	34.3	22.2	70	79	62	72	83	348-363
		48.9	18.4	725	1.7				14.5	18.7	26.1	30.3	19.6						
		40.5	22.2	600	2.5				14.5	18.7	26.1	30.3	19.6						
	PL 2502	62.8	22.3	598	2.0	12.0	8.4	90L/4D	14.0	18.0	25.2	29.2	18.9	61	70	53	63	74	348-363
		48.9	28.6	466	2.5				13.3	17.1	23.9	27.7	18.0						
	PL 1602	58.5	15.4	867	0.8	8.0	5.6	100L/6D	5.2	6.3	11.3	14.1	8.5	56	58	54	57	61	326-340
		45.6	19.7	676	1.0				4.6	5.6	10.0	12.5	7.5						
		37.8	23.8	560	1.4				4.3	5.3	9.4	11.7	7.0						
		31.4	28.7	465	1.7				4.1	5.0	8.9	11.1	6.7						
		28.9	31.1	428	2.6				4.1	5.0	8.9	11.1	6.7						
		24.0	37.5	356	3.0				3.9	4.7	8.4	10.5	6.3						
	PL 1602	58.5	23.9	557	1.2	8.0	5.6	90L/4D	4.3	5.3	9.4	11.7	7.0	47	49	45	48	52	326-340
		45.6	30.7	434	1.5				4.1	5.0	8.9	11.1	6.7						
		37.8	37.0	360	2.1				3.8	4.6	8.2	10.3	6.2						
		31.4	44.6	299	2.5				3.6	4.4	7.8	9.8	5.9						
	PL 1602	58.5	47.9	279	2.2	8.0	5.6	90L/2C	3.5	4.3	7.7	9.6	5.8	46.5	48.5	44.5	47.5	51.5	326-340
		45.6	61.4	217	2.7				3.2	4.0	7.1	8.9	5.3						
	PL 1002	37.8	23.8	560	1.0	8.0	5.6	100L/6D	4.3	5.3	9.4	11.7	7.0	54	56	52	55	59	304-318
		31.4	28.7	465	1.1				4.1	5.0	8.9	11.1	6.7						
		28.9	31.1	428	1.7				4.1	5.0	8.9	11.1	6.7						
		24.0	37.5	356	2.0				3.9	4.7	8.4	10.5	6.3						
		19.9	45.2	295	2.3				3.6	4.4	7.8	9.8	5.9						
		15.2	59.2	225	2.8				3.2	4.0	7.1	8.9	5.3						
	PL 1002	58.5	23.9	557	0.8	8.0	5.6	90L/4D	4.3	5.3	9.4	11.7	7.0	45	47	43	46	50	304-318
		45.6	30.7	434	1.0				4.1	5.0	8.9	11.1	6.7						
		37.8	37.0	360	1.4				3.8	4.6	8.2	10.3	6.2						
		31.4	44.6	299	1.6				3.6	4.4	7.8	9.8	5.9						
		28.9	48.4	275	2.4				3.5	4.3	7.7	9.6	5.8						
		24.0	58.3	229	2.8				3.2	4.0	7.1	8.9	5.3						
	PL 1002	58.5	47.9	279	1.5	8.0	5.6	90L/2C	3.5	4.3	7.7	9.6	5.8	44.5	46.5	42.5	45.5	49.5	304-318
		45.6	61.4	217	1.8				3.2	4.0	7.1	8.9	5.3						
		37.8	74.1	180	2.5				3.1	3.8	6.7	8.4	5.0						
		31.4	89.2	150	2.9				2.9	3.5	6.2	7.8	4.7						
	PL 1001	8.67	103.8	133	1.8	12.0	8.4	100L/6D	2.8	3.4	6.1	7.7	4.6	48	50	46	49	53	304-318
	PL 1001	8.67	161.5	86	2.6	12.0	8.4	90L/4D	2.4	3.0	5.3	6.7	4.0	39	41	37	40	44	304-318
2.20	PL 50004	1982.0	0.5	40123	1.2	20.0	14.0	112M/6C	178.0	246.0	-	-	133.5	438	-	380	393	546	536-549
		1672.3	0.5	33854	1.7				178.0	246.0	-	-	133.5						
		1387.4	0.6	28086	2.0				178.0	246.0	-	-	133.5						
		1258.4	0.7	25475	1.7				178.0	246.0	-	-	133.5						
		1151.0	0.8	23301	2.3				178.0	246.0	-	-	133.5						
		1061.8	0.8	21495	2.5				178.0	246.0	-	-	133.5						
		952.6	0.9	19284	2.8				178.0	246.0	-	-	133.5						
		878.7	1.0	17788	3.0				178.0	246.0	-	-	133.5						
	PL 50004	1982.0	0.7	25794	1.7	20.0	14.0	100L/4C	178.0	246.0	-	-	133.5	434	-	376	389	542	536-549
		1672.3	0.8	21763	2.5				178.0	246.0	-	-	133.5						
		1387.4	1.0	18055	2.9				178.0	246.0	-	-	133.5						
		1258.4	1.1	16377	2.5				178.0	246.0	-	-	133.5						

P1 (kW)		iges	n2 (rpm)	M2 (Nm)	fs	Pt (20°C) (kW)	Pt (40°C) (kW)	Motor IE2	FR (kN)					~ Kg					mm
									MC	MS	PC	PS	CPC	M...	P...	F	FS	CPC	
2.20	PL 50004	1982.0	1.4	12897	3.0	20.0	14.0	90L/2D	178.0	246.0	-	-	133.5	426	-	368	381	534	536-549
	PL 35004	1289.7	0.7	26108	1.5	17.0	11.9	112M/6C	144.0	204.0	-	-	108.0	306	-	270	278	369	516-529
		1067.3	0.8	21606	1.8				144.0	204.0	-	-	108.0						
		987.0	0.9	19981	1.9				144.0	204.0	-	-	108.0						
		816.8	1.1	16535	2.2				144.0	204.0	-	-	108.0						
		762.5	1.2	15436	2.3				144.0	204.0	-	-	108.0						
		703.4	1.3	14240	2.5				144.0	204.0	-	-	108.0						
		677.7	1.3	13719	2.6				144.0	204.0	-	-	108.0						
		583.5	1.5	11812	2.9				122.4	173.4	-	-	91.8						
	PL 35004	1289.7	1.1	16784	2.2	17.0	11.9	100L/4C	144.0	204.0	-	-	108.0	302	-	266	274	365	516-529
		1067.3	1.3	13890	2.6				144.0	204.0	-	-	108.0						
		987.0	1.4	12845	2.7				144.0	204.0	-	-	108.0						
	PL 30004	1425.1	0.6	28849	1.1	17.0	11.9	112M/6C	90.0	137.0	-	-	67.5	300	-	259	267	363	496-509
		1015.5	0.9	20558	1.4				90.0	137.0	-	-	67.5						
		838.9	1.1	16983	2.1				90.0	137.0	-	-	67.5						
		752.6	1.2	15236	2.3				90.0	137.0	-	-	67.5						
		694.3	1.3	14055	2.5				90.0	137.0	-	-	67.5						
		623.7	1.4	12626	2.7				90.0	137.0	-	-	67.5						
		576.0	1.6	11660	2.9				76.5	116.5	-	-	57.4						
	PL 30004	1425.1	1.0	18546	1.5	17.0	11.9	100L/4C	90.0	137.0	-	-	67.5	296	-	255	263	359	496-509
		1015.5	1.4	13216	2.0				90.0	137.0	-	-	67.5						
		838.9	1.7	10917	3.0				76.5	116.5	-	-	57.4						
	PL 30004	1425.1	2.0	9273	2.7	17.0	11.9	90L/2D	76.5	116.5	-	-	57.4	288	-	247	255	351	496-509
	PL 25004	1529.3	0.6	30959	0.8	15.0	10.5	112M/6C	90.0	137.0	-	-	67.5	267	-	231	239	328	476-489
		1476.0	0.6	29880	1.0				90.0	137.0	-	-	67.5						
		1354.5	0.7	27420	0.8				90.0	137.0	-	-	67.5						
		1272.4	0.7	25758	1.2				90.0	137.0	-	-	67.5						
		1126.9	0.8	22813	1.3				90.0	137.0	-	-	67.5						
		1013.4	0.9	20515	1.4				90.0	137.0	-	-	67.5						
		934.9	1.0	18926	1.5				90.0	137.0	-	-	67.5						
		873.6	1.0	17685	1.6				90.0	137.0	-	-	67.5						
		803.1	1.1	16258	1.7				90.0	137.0	-	-	67.5						
		752.3	1.2	15229	1.8				90.0	137.0	-	-	67.5						
		697.5	1.3	14120	2.4				90.0	137.0	-	-	67.5						
		617.8	1.5	12507	2.7				90.0	137.0	-	-	67.5						
		556.9	1.6	11274	3.0				76.5	116.5	-	-	57.4						
	PL 25004	1774.0	0.8	23087	1.0	15.0	10.5	100L/4C	90.0	137.0	-	-	67.5	263	-	227	235	324	476-489
		1529.3	0.9	19902	1.1				90.0	137.0	-	-	67.5						
		1476.0	0.9	19209	1.5				90.0	137.0	-	-	67.5						
		1354.5	1.0	17627	1.2				90.0	137.0	-	-	67.5						
		1272.4	1.1	16559	1.7				90.0	137.0	-	-	67.5						
		1126.9	1.2	14665	1.8				90.0	137.0	-	-	67.5						
		1013.4	1.4	13188	2.0				90.0	137.0	-	-	67.5						
		934.9	1.5	12167	2.1				90.0	137.0	-	-	67.5						
		873.6	1.6	11369	2.3				76.5	116.5	-	-	57.4						
		803.1	1.7	10451	2.4				76.5	116.5	-	-	57.4						
		752.3	1.9	9790	2.5				76.5	116.5	-	-	57.4						
	PL 25004	1774.0	1.6	11543	1.7	15.0	10.5	90L/2D	76.5	116.5	-	-	57.4	255	-	219	227	316	476-489
		1529.3	1.8	9951	1.9				76.5	116.5	-	-	57.4						
		1476.0	1.9	9604	2.6				76.5	116.5	-	-	57.4						
		1354.5	2.1	8814	2.1				76.5	116.5	-	-	57.4						
		1272.4	2.2	8279	2.9				76.5	116.5	-	-	57.4						
	PL 18004	1216.4	0.7	24625	0.8	13.0	9.1	112M/6C	60.0	106.0	140.0	186.0	45.0	188	215	157	193	238	452-469
		1113.0	0.8	22531	0.9				60.0	106.0	140.0	186.0	45.0						
		987.4	0.9	19989	0.9				60.0	106.0	140.0	186.0	45.0						
		928.8	1.0	18802	1.0				60.0	106.0	140.0	186.0	45.0						
		849.8	1.1	17203	1.1				60.0	106.0	140.0	186.0	45.0						
		818.8	1.1	16576	1.3				60.0	106.0	140.0	186.0	45.0						
		770.5	1.2	15598	1.3				60.0	106.0	140.0	186.0	45.0						
		720.0	1.3	14576	1.4				60.0	106.0	140.0	186.0	45.0						
		677.9	1.3	13723	1.5				60.0	106.0	140.0	186.0	45.0						
		620.0	1.5	12551	1.6				60.0	106.0	140.0	186.0	45.0						
		549.1	1.6	11116	1.7				51.0	90.1	119.0	158.1	38.3						
		489.2	1.8	9903	1.9				51.0	90.1	119.0	158.1	38.3						
		438.4	2.1	8875	2.1				51.0	90.1	119.0	158.1	38.3						
		377.2	2.4	7636	2.4				51.0	90.1	119.0	158.1	38.3						
		348.6	2.6	7057	2.5				46.5	82.2	108.5	144.2	34.9						

P1 (kW)		iges	n2 (rpm)	M2 (Nm)	fs	Pt (20°C) (kW)	Pt (40°C) (kW)	Motor IE2	FR (kN)					~ Kg					mm
									MC	MS	PC	PS	CPC	M...	P...	F	FS	CPC	
2.20		1216.4	1.2	15830	1.1				60.0	106.0	140.0	186.0	45.0						
		1113.0	1.3	14484	1.2				60.0	106.0	140.0	186.0	45.0						
		987.4	1.4	12850	1.3				60.0	106.0	140.0	186.0	45.0						
		928.8	1.5	12087	1.4				51.0	90.1	119.0	158.1	38.3						
		849.8	1.6	11059	1.5				51.0	90.1	119.0	158.1	38.3						
		818.8	1.7	10656	1.8				51.0	90.1	119.0	158.1	38.3						
	PL 18004	770.5	1.8	10027	1.9	13.0	9.1	100L/4C	51.0	90.1	119.0	158.1	38.3	184	211	153	189	234	452-469
		720.0	1.9	9370	2.0				51.0	90.1	119.0	158.1	38.3						
		677.9	2.1	8822	2.1				51.0	90.1	119.0	158.1	38.3						
		620.0	2.3	8069	2.3				51.0	90.1	119.0	158.1	38.3						
		549.1	2.5	7146	2.5				46.5	82.2	108.5	144.2	34.9						
		489.2	2.9	6366	2.8				46.5	82.2	108.5	144.2	34.9						
		438.4	3.2	5705	3.0				46.5	82.2	108.5	144.2	34.9						
		1216.4	2.3	7915	2.0				51.0	90.1	119.0	158.1	38.3						
		1113.0	2.5	7242	2.2				46.5	82.2	108.5	144.2	34.9						
	PL 18004	987.4	2.8	6425	2.4	13.0	9.1	90L/2D	46.5	82.2	108.5	144.2	34.9	176	203	145	181	226	452-469
		928.8	3.0	6044	2.5				46.5	82.2	108.5	144.2	34.9						
		849.8	3.3	5530	2.7				46.5	82.2	108.5	144.2	34.9						
		1008.9	0.9	20424	0.9				60.0	106.0	140.0	186.0	45.0						
		907.3	1.0	18367	0.8				60.0	106.0	140.0	186.0	45.0						
		806.4	1.1	16325	0.8				60.0	106.0	140.0	186.0	45.0						
		724.4	1.2	14665	0.9				60.0	106.0	140.0	186.0	45.0						
		640.5	1.4	12966	1.3				60.0	106.0	140.0	186.0	45.0						
		612.0	1.5	12389	1.4				60.0	106.0	140.0	186.0	45.0						
		576.1	1.6	11662	1.1				51.0	90.1	119.0	158.1	38.3						
	PL 16004	554.4	1.6	11223	1.7	11.0	7.7	112M/6C	51.0	90.1	119.0	158.1	38.3	174	201	143	179	224	428-445
		531.4	1.7	10758	1.6				51.0	90.1	119.0	158.1	38.3						
		507.7	1.8	10278	1.9				51.0	90.1	119.0	158.1	38.3						
		459.9	2.0	9310	2.0				51.0	90.1	119.0	158.1	38.3						
		440.9	2.0	8926	1.8				51.0	90.1	119.0	158.1	38.3						
		421.2	2.1	8527	2.2				51.0	90.1	119.0	158.1	38.3						
		388.6	2.3	7867	2.3				51.0	90.1	119.0	158.1	38.3						
		352.0	2.6	7126	2.5				46.5	82.2	108.5	144.2	34.9						
		1270.1	1.1	16529	0.8				60.0	106.0	140.0	186.0	45.0						
		1093.7	1.3	14233	0.9				60.0	106.0	140.0	186.0	45.0						
		1008.9	1.4	13130	1.3				60.0	106.0	140.0	186.0	45.0						
		907.3	1.5	11808	1.1				51.0	90.1	119.0	158.1	38.3						
		806.4	1.7	10494	1.2				51.0	90.1	119.0	158.1	38.3						
		724.4	1.9	9427	1.3				51.0	90.1	119.0	158.1	38.3						
	PL 16004	640.5	2.2	8335	1.9	11.0	7.7	100L/4C	51.0	90.1	119.0	158.1	38.3	170	197	139	175	220	428-445
		612.0	2.3	7965	2.0				51.0	90.1	119.0	158.1	38.3						
		576.1	2.4	7497	1.6				51.0	90.1	119.0	158.1	38.3						
		554.4	2.5	7215	2.5				46.5	82.2	108.5	144.2	34.9						
		531.4	2.6	6916	2.2				46.5	82.2	108.5	144.2	34.9						
		507.7	2.8	6607	2.7				46.5	82.2	108.5	144.2	34.9						
		459.9	3.0	5985	2.9				46.5	82.2	108.5	144.2	34.9						
		440.9	3.2	5738	2.6				46.5	82.2	108.5	144.2	34.9						
		1849.8	1.5	12037	1.1				51.0	90.1	119.0	158.1	38.3						
		1530.9	1.8	9961	1.3				51.0	90.1	119.0	158.1	38.3						
		1270.1	2.2	8264	1.5				51.0	90.1	119.0	158.1	38.3						
		1093.7	2.6	7117	1.7				46.5	82.2	108.5	144.2	34.9						
	PL 16004	1008.9	2.8	6565	2.3	11.0	7.7	90L/2D	46.5	82.2	108.5	144.2	34.9	162	189	131	167	212	428-445
		907.3	3.1	5904	2.0				46.5	82.2	108.5	144.2	34.9						
		806.4	3.5	5247	2.1				46.5	82.2	108.5	144.2	34.9						
		724.4	3.9	4714	2.3				43.5	76.9	101.5	134.9	32.6						
		576.1	4.9	3749	2.8				40.5	71.6	94.5	125.6	30.4						
		640.5	1.4	12966	0.9				65.0	95.0	-	-	48.8						
		612.0	1.5	12389	0.9				65.0	95.0	-	-	48.8						
		576.1	1.6	11662	0.8				55.3	80.8	-	-	41.4						
		554.4	1.6	11223	1.2				55.3	80.8	-	-	41.4						
		531.4	1.7	10758	1.0				55.3	80.8	-	-	41.4						
	PL 10004	507.7	1.8	10278	1.3	11.0	7.7	112M/6C	55.3	80.8	-	-	41.4	166	-	133	171	216	410-421
		459.9	2.0	9310	1.4				55.3	80.8	-	-	41.4						
		440.9	2.0	8926	1.2				55.3	80.8	-	-	41.4						
		421.2	2.1	8527	1.5				55.3	80.8	-	-	41.4						
		388.6	2.3	7867	1.6				55.3	80.8	-	-	41.4						
		352.0	2.6	7126	1.7				50.4	73.6	-	-	37.8						

P1 (kW)		iges	n2 (rpm)	M2 (Nm)	fs	Pt (20°C) (kW)	Pt (40°C) (kW)	Motor IE2	FR (kN)					~ Kg					mm
									MC	MS	PC	PS	CPC	M...	P...	F	FS	CPC	
2.20	PL 10004	1008.9	1.4	13130	0.9	11.0	7.7	100L/4C	65.0	95.0	-	-	48.8	162	-	129	167	212	410-421
		907.3	1.5	11808	0.8				55.3	80.8	-	-	41.4						
		806.4	1.7	10494	0.8				55.3	80.8	-	-	41.4						
		724.4	1.9	9427	0.9				55.3	80.8	-	-	41.4						
		640.5	2.2	8335	1.3				55.3	80.8	-	-	41.4						
		612.0	2.3	7965	1.3				55.3	80.8	-	-	41.4						
		576.1	2.4	7497	1.1				55.3	80.8	-	-	41.4						
		554.4	2.5	7215	1.7				50.4	73.6	-	-	37.8						
		531.4	2.6	6916	1.5				50.4	73.6	-	-	37.8						
		507.7	2.8	6607	1.8				50.4	73.6	-	-	37.8						
		459.9	3.0	5985	2.0				50.4	73.6	-	-	37.8						
		440.9	3.2	5738	1.8				50.4	73.6	-	-	37.8						
		421.2	3.3	5481	2.1				50.4	73.6	-	-	37.8						
		388.6	3.6	5057	2.2				47.1	68.9	-	-	35.3						
		352.0	4.0	4581	2.4				47.1	68.9	-	-	35.3						
	PL 10004	1530.9	1.8	9961	0.9	11.0	7.7	90L/2D	55.3	80.8	-	-	41.4	154	-	121	159	204	410-421
		1270.1	2.2	8264	1.0				55.3	80.8	-	-	41.4						
		1093.7	2.6	7117	1.1				50.4	73.6	-	-	37.8						
		1008.9	2.8	6565	1.6				50.4	73.6	-	-	37.8						
		907.3	3.1	5904	1.3				50.4	73.6	-	-	37.8						
		806.4	3.5	5247	1.5				50.4	73.6	-	-	37.8						
		724.4	3.9	4714	1.6				47.1	68.9	-	-	35.3						
		640.5	4.4	4168	2.3				47.1	68.9	-	-	35.3						
		612.0	4.6	3982	2.4				43.9	64.1	-	-	32.9						
		576.1	4.9	3749	1.9				43.9	64.1	-	-	32.9						
		554.4	5.1	3607	3.0				43.9	64.1	-	-	32.9						
		531.4	5.3	3458	2.6				43.9	64.1	-	-	32.9						
	PL 7004	474.3	1.9	9602	0.8	8.0	5.6	112M/6C	-	-	97.8	117.3	73.3	-	129	111	132	146	392-400
		434.4	2.1	8794	0.8				-	-	97.8	117.3	73.3						
		400.7	2.2	8112	0.9				-	-	97.8	117.3	73.3						
		347.9	2.6	7043	1.0				-	-	89.1	107.0	66.8						
		332.4	2.7	6729	1.0				-	-	89.1	107.0	66.8						
		301.1	3.0	6095	1.1				-	-	89.1	107.0	66.8						
	PL 7004	661.9	2.1	8614	0.8	8.0	5.6	100L/4C	-	-	97.8	117.3	73.3	-	125	107	128	142	392-400
		632.4	2.2	8230	0.8				-	-	97.8	117.3	73.3						
		571.7	2.4	7440	0.9				-	-	97.8	117.3	73.3						
		523.6	2.7	6814	1.0				-	-	89.1	107.0	66.8						
		474.3	3.0	6172	1.1				-	-	89.1	107.0	66.8						
		434.4	3.2	5653	1.2				-	-	89.1	107.0	66.8						
		400.7	3.5	5215	1.3				-	-	89.1	107.0	66.8						
		347.9	4.0	4528	1.4				-	-	83.4	100.1	62.5						
		332.4	4.2	4326	1.5				-	-	83.4	100.1	62.5						
		301.1	4.6	3918	1.6				-	-	77.6	93.2	58.2						
	PL 7004	1048.7	2.7	6824	0.8	8.0	5.6	90L/2D	-	-	89.1	107.0	66.8	-	117	99	120	134	392-400
		976.5	2.9	6354	0.9				-	-	89.1	107.0	66.8						
		870.0	3.2	5661	1.0				-	-	89.1	107.0	66.8						
		832.3	3.4	5416	1.1				-	-	89.1	107.0	66.8						
		768.7	3.6	5002	1.2				-	-	83.4	100.1	62.5						
		747.3	3.7	4863	1.1				-	-	83.4	100.1	62.5						
		661.9	4.2	4307	1.4				-	-	83.4	100.1	62.5						
		632.4	4.4	4115	1.4				-	-	83.4	100.1	62.5						
		571.7	4.9	3720	1.7				-	-	77.6	93.2	58.2						
		523.6	5.3	3407	1.8				-	-	77.6	93.2	58.2						
		474.3	5.9	3086	1.9				-	-	69.0	82.8	51.8						
		434.4	6.4	2827	2.1				-	-	69.0	82.8	51.8						
		400.7	7.0	2607	2.3				-	-	66.1	79.4	49.6						
		347.9	8.0	2264	2.5				-	-	63.3	75.9	47.4						
		332.4	8.4	2163	2.6				-	-	63.3	75.9	47.4						
		301.1	9.3	1959	2.9				-	-	60.4	72.5	45.3						
	PL 5004	468.4	3.0	6096	0.8	6.0	4.2	100L/4C	27.1	34.9	48.8	56.6	36.6	87	96	78	89	100	370-385
		424.3	3.3	5522	0.8				27.1	34.9	48.8	56.6	36.6						
		413.9	3.4	5386	0.9				27.1	34.9	48.8	56.6	36.6						
		388.6	3.6	5057	0.9				25.4	32.6	45.7	52.9	34.3						
		352.0	4.0	4581	0.9				25.4	32.6	45.7	52.9	34.3						

P1 (kW)		iges	n2 (rpm)	M2 (Nm)	fs	Pt (20°C) (kW)	Pt (40°C) (kW)	Motor IE2	FR (kN)					~ Kg					mm
									MC	MS	PC	PS	CPC	M...	P...	F	FS	CPC	
2.20	PL 5004	858.0	3.3	5583	0.8	6.0	4.2	90L/2D	27.1	34.9	48.8	56.6	36.6	79	88	70	81	92	370-385
		805.5	3.5	5241	0.8				27.1	34.9	48.8	56.6	36.6						
		737.7	3.8	4800	1.0				25.4	32.6	45.7	52.9	34.3						
		668.2	4.2	4348	1.0				25.4	32.6	45.7	52.9	34.3						
		612.0	4.6	3982	1.2				23.6	30.4	42.5	49.3	31.9						
		554.4	5.1	3607	1.1				23.6	30.4	42.5	49.3	31.9						
		511.4	5.5	3328	1.2				23.6	30.4	42.5	49.3	31.9						
		468.4	6.0	3048	1.4				21.0	27.0	37.8	43.8	28.4						
		424.3	6.6	2761	1.4				20.1	25.9	36.2	42.0	27.2						
		413.9	6.8	2693	1.6				20.1	25.9	36.2	42.0	27.2						
		388.6	7.2	2529	1.7				20.1	25.9	36.2	42.0	27.2						
		365.8	7.7	2380	1.3				19.3	24.8	34.7	40.2	26.0						
		352.0	8.0	2290	1.7				19.3	24.8	34.7	40.2	26.0						
	PL 2504	612.0	4.6	3982	0.8	4.0	2.8	90L/2D	23.6	30.4	42.5	49.3	31.9	73	82	64	75	86	348-363
		554.4	5.1	3607	0.8				23.6	30.4	42.5	49.3	31.9						
		511.4	5.5	3328	0.8				23.6	30.4	42.5	49.3	31.9						
		468.4	6.0	3048	1.0				21.0	27.0	37.8	43.8	28.4						
		424.3	6.6	2761	1.0				20.1	25.9	36.2	42.0	27.2						
		413.9	6.8	2693	1.1				20.1	25.9	36.2	42.0	27.2						
		388.6	7.2	2529	1.2				20.1	25.9	36.2	42.0	27.2						
		365.8	7.7	2380	0.9				19.3	24.8	34.7	40.2	26.0						
		352.0	8.0	2290	1.1				19.3	24.8	34.7	40.2	26.0						
	PL 25003	317.2	2.8	6654	2.7	20.0	14.0	112M/6C	69.8	106.2	-	-	52.3	261	-	225	233	322	476-489
	PL 16003	330.3	2.7	6929	1.3	15.0	10.5	112M/6C	46.5	82.2	108.5	144.2	34.9	168	195	136	173	218	428-445
		274.1	3.3	5750	2.0				46.5	82.2	108.5	144.2	34.9						
		235.4	3.8	4938	1.7				43.5	76.9	101.5	134.9	32.6						
		226.8	4.0	4758	2.3				43.5	76.9	101.5	134.9	32.6						
		209.7	4.3	4399	1.9				43.5	76.9	101.5	134.9	32.6						
		195.3	4.6	4097	2.6				40.5	71.6	94.5	125.6	30.4						
		188.2	4.8	3948	2.7				40.5	71.6	94.5	125.6	30.4						
	PL 16003	330.3	4.2	4454	1.8	15.0	10.5	100L/4C	43.5	76.9	101.5	134.9	32.6	164	191	132	169	214	428-445
		274.1	5.1	3696	2.9				40.5	71.6	94.5	125.6	30.4						
		235.4	5.9	3175	2.5				36.0	63.6	84.0	111.6	27.0						
		209.7	6.7	2828	2.7				34.5	61.0	80.5	107.0	25.9						
	PL 10003	330.3	2.7	6929	0.9	15.0	10.5	112M/6C	50.4	73.6	-	-	37.8	160	-	127	165	210	410-421
		274.1	3.3	5750	1.3				50.4	73.6	-	-	37.8						
		235.4	3.8	4938	1.2				47.1	68.9	-	-	35.3						
		226.8	4.0	4758	1.6				47.1	68.9	-	-	35.3						
		209.7	4.3	4399	1.3				47.1	68.9	-	-	35.3						
		195.3	4.6	4097	1.8				43.9	64.1	-	-	32.9						
		188.2	4.8	3948	1.8				43.9	64.1	-	-	32.9						
		173.6	5.2	3642	2.5				43.9	64.1	-	-	32.9						
		155.9	5.8	3270	2.2				39.0	57.0	-	-	29.3						
		144.0	6.3	3021	3.0				39.0	57.0	-	-	29.3						
		129.4	7.0	2715	2.5				37.4	54.6	-	-	28.0						
		118.5	7.6	2486	2.7				35.8	52.3	-	-	26.8						
	PL 10003	330.3	4.2	4454	1.3	15.0	10.5	100L/4C	47.1	68.9	-	-	35.3	156	-	123	161	206	410-421
		274.1	5.1	3696	1.9				43.9	64.1	-	-	32.9						
		235.4	5.9	3175	1.7				39.0	57.0	-	-	29.3						
		226.8	6.2	3059	2.3				39.0	57.0	-	-	29.3						
		209.7	6.7	2828	1.9				37.4	54.6	-	-	28.0						
		195.3	7.2	2634	2.6				37.4	54.6	-	-	28.0						
		188.2	7.4	2538	2.7				37.4	54.6	-	-	28.0						
	PL 10003	330.3	8.5	2227	2.3	15.0	10.5	90L/2D	35.8	52.3	-	-	26.8	148	-	115	153	198	410-421
		235.4	11.9	1587	3.0				32.5	47.5	-	-	24.4						
	PL 7003	283.8	3.2	5954	0.8	14.0	9.8	112M/6C	-	-	89.1	107.0	66.8	-	123	105	126	140	392-400
		244.7	3.7	5133	1.0				-	-	83.4	100.1	62.5						
		216.7	4.2	4546	1.3				-	-	83.4	100.1	62.5						
		194.9	4.6	4089	1.0				-	-	77.6	93.2	58.2						
		174.4	5.2	3659	1.3				-	-	77.6	93.2	58.2						
		155.4	5.8	3260	1.5				-	-	69.0	82.8	51.8						
		148.8	6.0	3122	1.8				-	-	69.0	82.8	51.8						
		139.2	6.5	2920	1.6				-	-	69.0	82.8	51.8						
		127.9	7.0	2683	2.2				-	-	66.1	79.4	49.6						
		112.9	8.0	2368	2.2				-	-	63.3	75.9	47.4						
		102.1	8.8	2142	2.6				-	-	60.4	72.5	45.3						
		93.7	9.6	1966	2.6				-	-	57.5	69.0	43.1						
		88.4	10.2	1854	2.4				-	-	57.5	69.0	43.1						
		78.3	11.5	1643	3.0				-	-	57.5	69.0	43.1						

P1 (kW)		iges	n2 (rpm)	M2 (Nm)	fs	Pt (20°C) (kW)	Pt (40°C) (kW)	Motor IE2	FR (kN) MC	MS	PC	PS	CPC	~ Kg M…	P…	F	FS	CPC	mm
2.20	PL 7003	342.6	4.1	4620	0.8	14.0	9.8	100L/4C	-	-	83.4	100.1	62.5	-	119	101	122	136	392-400
		283.8	4.9	3827	1.1				-	-	77.6	93.2	58.2						
		244.7	5.7	3300	1.5				-	-	69.0	82.8	51.8						
		216.7	6.5	2922	1.9				-	-	69.0	82.8	51.8						
		194.9	7.2	2628	1.5				-	-	66.1	79.4	49.6						
		174.4	8.0	2352	2.0				-	-	63.3	75.9	47.4						
		155.4	9.0	2096	2.1				-	-	60.4	72.5	45.3						
		148.8	9.4	2007	2.5				-	-	60.4	72.5	45.3						
		139.2	10.1	1877	2.4				-	-	57.5	69.0	43.1						
	PL 7003	342.6	8.2	2310	1.4	14.0	9.8	90L/2D	-	-	63.3	75.9	47.4	-	111	93	114	128	392-400
		283.8	9.9	1914	2.0				-	-	57.5	69.0	43.1						
		244.7	11.4	1650	2.6				-	-	57.5	69.0	43.1						
		194.9	14.4	1314	2.7				-	-	54.1	64.9	40.5						
	PL 5003	195.3	4.6	4097	0.8	10.0	7.0	112M/6C	23.6	30.4	42.5	49.3	31.9	85	94	76	87	98	370-385
		173.6	5.2	3642	0.8				23.6	30.4	42.5	49.3	31.9						
		162.0	5.6	3398	1.0				21.0	27.0	37.8	43.8	28.4						
		155.9	5.8	3270	1.2				21.0	27.0	37.8	43.8	28.4						
		149.5	6.0	3136	1.0				21.0	27.0	37.8	43.8	28.4						
		129.4	7.0	2715	1.4				20.1	25.9	36.2	42.0	27.2						
		119.3	7.5	2503	1.5				19.3	24.8	34.7	40.2	26.0						
		99.0	9.1	2077	1.8				18.4	23.6	33.1	38.3	24.8						
		90.7	9.9	1903	2.1				17.5	22.5	31.5	36.5	23.6						
		82.1	11.0	1722	2.1				17.5	22.5	31.5	36.5	23.6						
		75.2	12.0	1578	2.5				17.5	22.5	31.5	36.5	23.6						
		62.9	14.3	1320	2.6				16.5	21.2	29.6	34.3	22.2						
	PL 5003	302.2	4.6	4075	0.8	10.0	7.0	100L/4C	23.6	30.4	42.5	49.3	31.9	81	90	72	83	94	370-385
		273.4	5.1	3687	0.8				23.6	30.4	42.5	49.3	31.9						
		235.4	5.9	3175	1.0				21.0	27.0	37.8	43.8	28.4						
		195.3	7.2	2634	1.2				19.3	24.8	34.7	40.2	26.0						
		173.6	8.1	2341	1.2				19.3	24.8	34.7	40.2	26.0						
		162.0	8.6	2185	1.4				18.4	23.6	33.1	38.3	24.8						
		155.9	9.0	2102	1.8				18.4	23.6	33.1	38.3	24.8						
		149.5	9.4	2016	1.5				18.4	23.6	33.1	38.3	24.8						
		129.4	10.8	1745	2.1				17.5	22.5	31.5	36.5	23.6						
		119.3	11.7	1609	2.2				17.5	22.5	31.5	36.5	23.6						
		99.0	14.1	1335	2.6				16.5	21.2	29.6	34.3	22.2						
		82.1	17.1	1107	3.0				15.6	20.0	28.0	32.5	21.0						
	PL 5003	330.3	8.5	2227	0.9	10.0	7.0	90L/2D	19.3	24.8	34.7	40.2	26.0	73	82	64	75	86	370-385
		302.2	9.3	2038	1.5				18.4	23.6	33.1	38.3	24.8						
		273.4	10.2	1844	1.4				17.5	22.5	31.5	36.5	23.6						
		235.4	11.9	1587	1.8				17.5	22.5	31.5	36.5	23.6						
		195.3	14.3	1317	2.2				16.5	21.2	29.6	34.3	22.2						
		173.6	16.1	1171	2.1				16.5	21.2	29.6	34.3	22.2						
		162.0	17.3	1092	2.5				16.5	21.2	29.6	34.3	22.2						
		149.5	18.7	1008	2.7				14.5	18.7	26.1	30.3	19.6						
	PL 2503	155.9	5.8	3270	0.8	8.0	5.6	112M/6C	21.0	27.0	37.8	43.8	28.4	79	88	70	81	92	348-363
		129.4	7.0	2715	1.0				20.1	25.9	36.2	42.0	27.2						
		119.3	7.5	2503	1.1				19.3	24.8	34.7	40.2	26.0						
		99.0	9.1	2077	1.2				18.4	23.6	33.1	38.3	24.8						
		90.7	9.9	1903	1.5				17.5	22.5	31.5	36.5	23.6						
		82.1	11.0	1722	1.4				17.5	22.5	31.5	36.5	23.6						
		75.2	12.0	1578	1.7				17.5	22.5	31.5	36.5	23.6						
		62.9	14.3	1320	1.8				16.5	21.2	29.6	34.3	22.2						
		57.6	15.6	1208	2.1				16.5	21.2	29.6	34.3	22.2						
		52.1	17.3	1093	2.1				16.5	21.2	29.6	34.3	22.2						
	PL 2503	195.3	7.2	2634	0.8	8.0	5.6	100L/4C	19.3	24.8	34.7	40.2	26.0	75	84	66	77	88	348-363
		173.6	8.1	2341	0.8				19.3	24.8	34.7	40.2	26.0						
		162.0	8.6	2185	1.0				18.4	23.6	33.1	38.3	24.8						
		155.9	9.0	2102	1.2				18.4	23.6	33.1	38.3	24.8						
		149.5	9.4	2016	1.0				18.4	23.6	33.1	38.3	24.8						
		129.4	10.8	1745	1.4				17.5	22.5	31.5	36.5	23.6						
		119.3	11.7	1609	1.5				17.5	22.5	31.5	36.5	23.6						
		99.0	14.1	1335	1.8				16.5	21.2	29.6	34.3	22.2						
		90.7	15.4	1223	2.1				16.5	21.2	29.6	34.3	22.2						
		82.1	17.1	1107	2.1				15.6	20.0	28.0	32.5	21.0						
		75.2	18.6	1014	2.5				15.6	20.0	28.0	32.5	21.0						
		62.9	22.3	848	2.6				14.0	18.0	25.2	29.2	18.9						
		52.1	26.9	703	3.0				13.3	17.1	23.9	27.7	18.0						

P1 (kW)		iges	n2 (rpm)	M2 (Nm)	fs	Pt (20°C) (kW)	Pt (40°C) (kW)	Motor IE2	FR (kN)					~ Kg					mm
									MC	MS	PC	PS	CPC	M...	P...	F	FS	CPC	
2.20	PL 2503	302.2	9.3	2038	1.0	8.0	5.6	90L/2D	18.4	23.6	33.1	38.3	24.8	67	76	58	69	80	348-363
		273.4	10.2	1844	0.9				17.5	22.5	31.5	36.5	23.6						
		235.4	11.9	1587	1.3				17.5	22.5	31.5	36.5	23.6						
		195.3	14.3	1317	1.5				16.5	21.2	29.6	34.3	22.2						
		173.6	16.1	1171	1.4				16.5	21.2	29.6	34.3	22.2						
		162.0	17.3	1092	1.7				16.5	21.2	29.6	34.3	22.2						
		155.9	18.0	1051	2.2				14.5	18.7	26.1	30.3	19.6						
		149.5	18.7	1008	1.9				14.5	18.7	26.1	30.3	19.6						
		129.4	21.6	873	2.5				14.5	18.7	26.1	30.3	19.6						
		119.3	23.5	804	2.7				13.7	17.6	24.6	28.5	18.4						
	PL 1603	78.7	11.4	1651	0.8	5.0	3.5	112M/6C	5.5	6.8	12.0	15.0	9.0	65	67	63	66	70	326-340
		70.8	12.7	1485	0.9				5.2	6.3	11.3	14.1	8.5						
		65.3	13.8	1370	0.9				5.2	6.3	11.3	14.1	8.5						
		54.2	16.6	1137	1.1				5.2	6.3	11.3	14.1	8.5						
	PL 1603	111.5	12.6	1504	0.9	5.0	3.5	100L/4C	5.3	6.5	11.6	14.6	8.7	61	63	59	62	66	326-340
		102.9	13.6	1388	0.9				5.3	6.5	11.6	14.6	8.7						
		85.3	16.4	1150	1.1				5.2	6.3	11.3	14.1	8.5						
		78.7	17.8	1061	1.1				4.9	6.0	10.7	13.4	8.0						
		70.8	19.8	955	1.2				4.6	5.6	10.0	12.5	7.5						
		65.3	21.4	881	1.3				4.6	5.6	10.0	12.5	7.5						
		54.2	25.8	731	1.6				4.3	5.3	9.4	11.7	7.0						
	PL 1603	208.0	13.5	1403	0.9	5.0	3.5	90L/2D	5.2	6.3	11.3	14.1	8.5	53	55	51	54	58	326-340
		172.6	16.2	1164	1.1				5.2	6.3	11.3	14.1	8.5						
		162.0	17.3	1092	1.1				5.2	6.3	11.3	14.1	8.5						
		134.4	20.8	906	1.3				4.6	5.6	10.0	12.5	7.5						
		111.5	25.1	752	1.5				4.3	5.3	9.4	11.7	7.0						
		102.9	27.2	694	1.6				4.3	5.3	9.4	11.7	7.0						
		85.3	32.8	575	1.9				3.9	4.7	8.4	10.5	6.3						
		78.7	35.6	531	2.0				3.9	4.7	8.4	10.5	6.3						
		70.8	39.5	477	2.2				3.7	4.5	8.0	10.1	6.0						
		65.3	42.9	440	2.4				3.6	4.4	7.8	9.8	5.9						
		54.2	51.7	365	2.7				3.5	4.3	7.7	9.6	5.8						
	PL 1003	70.8	19.8	955	0.8	5.0	3.5	100L/4C	4.6	5.6	10.0	12.5	7.5	59	61	57	60	64	304-318
		65.3	21.4	881	0.9				4.6	5.6	10.0	12.5	7.5						
		54.2	25.8	731	1.0				4.3	5.3	9.4	11.7	7.0						
	PL 1003	134.4	20.8	906	0.8	5.0	3.5	90L/2D	4.6	5.6	10.0	12.5	7.5	51	53	49	52	56	304-318
		111.5	25.1	752	1.0				4.3	5.3	9.4	11.7	7.0						
		102.9	27.2	694	1.0				4.3	5.3	9.4	11.7	7.0						
		85.3	32.8	575	1.2				3.9	4.7	8.4	10.5	6.3						
		78.7	35.6	531	1.3				3.9	4.7	8.4	10.5	6.3						
		70.8	39.5	477	1.4				3.7	4.5	8.0	10.1	6.0						
		65.3	42.9	440	1.5				3.6	4.4	7.8	9.8	5.9						
		54.2	51.7	365	1.8				3.5	4.3	7.7	9.6	5.8						
	PL 7002	50.8	17.7	1104	2.5	18.0	12.6	112M/6C	-	-	47.7	57.3	35.8	-	117	99	120	133	392-400
	PL 5002	48.9	18.4	1063	1.7	15.0	10.5	112M/6C	14.5	18.7	26.1	30.3	19.6	79	88	70	81	92	370-385
		40.5	22.2	880	2.6				14.5	18.7	26.1	30.3	19.6						
	PL 5002	48.9	28.6	683	2.5	15.0	10.5	100L/4C	13.3	17.1	23.9	27.7	18.0	75	84	66	77	88	370-385
	PL 2502	62.8	14.3	1365	0.9	12.0	8.4	112M/6C	16.5	21.2	29.6	34.3	22.2	73	82	65	75	86	348-363
		48.9	18.4	1063	1.2				14.5	18.7	26.1	30.3	19.6						
		40.5	22.2	880	1.7				14.5	18.7	26.1	30.3	19.6						
		34.9	25.8	759	2.3				13.7	17.6	24.6	28.5	18.4						
		28.9	31.1	628	2.7				13.0	16.7	23.3	27.0	17.5						
	PL 2502	62.8	22.3	878	1.3	12.0	8.4	100L/4C	14.0	18.0	25.2	29.2	18.9	69	78	61	71	82	348-363
		48.9	28.6	683	1.7				13.3	17.1	23.9	27.7	18.0						
		40.5	34.6	566	2.5				12.3	15.8	22.1	25.6	16.5						
	PL 2502	62.8	44.6	439	2.4	12.0	8.4	90L/2D	11.4	14.6	20.5	23.7	15.4	61	70	53	63	74	348-363
		48.9	57.3	342	2.9				10.9	14.0	19.5	22.6	14.6						
	PL 1602	37.8	23.8	822	1.0	8.0	5.6	112M/6C	4.3	5.3	9.4	11.7	7.0	59	61	57	60	64	326-340
		31.4	28.7	683	1.2				4.1	5.0	8.9	11.1	6.7						
		28.9	31.1	628	1.7				4.1	5.0	8.9	11.1	6.7						
		24.0	37.5	522	2.1				3.9	4.7	8.4	10.5	6.3						
		19.9	45.2	433	2.4				3.6	4.4	7.8	9.8	5.9						
		15.2	59.2	330	3.0				3.2	4.0	7.1	8.9	5.3						
	PL 1602	58.5	23.9	818	0.8	8.0	5.6	100L/4C	4.3	5.3	9.4	11.7	7.0	55	57	53	56	60	326-340
		45.6	30.7	637	1.0				4.1	5.0	8.9	11.1	6.7						
		37.8	37.0	528	1.4				3.8	4.6	8.2	10.3	6.2						
		31.4	44.6	439	1.7				3.6	4.4	7.8	9.8	5.9						
		28.9	48.4	404	2.5				3.5	4.3	7.7	9.6	5.8						
		24.0	58.3	335	2.9				3.2	4.0	7.1	8.9	5.3						

PGR DRIVE TECHNOLOGIES

P1 (kW)		iges	n2 (rpm)	M2 (Nm)	fs	Pt (20°C) (kW)	Pt (40°C) (kW)	Motor IE2	FR (kN)					~ Kg					mm
									MC	MS	PC	PS	CPC	M...	P...	F	FS	CPC	
2.20	PL 1602	58.5 45.6 37.8 31.4	47.9 61.4 74.1 89.2	409 319 264 219	1.5 1.8 2.5 3.0	8.0	5.6	90L/2D	3.5 3.2 3.1 2.9	4.3 4.0 3.8 3.5	7.7 7.1 6.7 6.2	9.6 8.9 8.4 7.8	5.8 5.3 5.0 4.7	47	49	45	48	52	326-340
	PL 1002	58.5 45.6 37.8 31.4 28.9 24.0 19.9 15.2	23.9 30.7 37.0 44.6 48.4 58.3 70.4 92.1	818 637 528 439 404 335 278 212	0.6 0.7 1.0 1.1 1.6 1.9 2.2 2.8	8.0	5.6	100L/4C	4.3 4.1 3.8 3.6 3.5 3.2 3.1 2.9	5.3 5.0 4.6 4.4 4.3 4.0 3.8 3.5	9.4 8.9 8.2 7.8 7.7 7.1 6.8 6.2	11.7 11.1 10.3 9.8 9.6 8.9 8.6 7.8	7.0 6.7 6.2 5.9 5.8 5.3 5.1 4.7	53	55	51	54	58	304-318
	PL 1002	31.4 28.9 24.0 19.9 15.2 12.6	28.7 31.1 37.5 45.2 59.2 71.4	683 628 522 433 330 274	0.8 1.1 1.3 1.5 1.9 2.2	8.0	5.6	112M/6C	4.1 4.1 3.9 3.6 3.2 3.1	5.0 5.0 4.7 4.4 4.0 3.8	8.9 8.9 8.4 7.8 7.1 6.8	11.1 11.1 10.5 9.8 8.9 8.6	6.7 6.7 6.3 5.9 5.3 5.1	57	59	55	58	62	304-318
	PL 1002	58.5 45.6 37.8 31.4 28.9	47.9 61.4 74.1 89.2 96.9	409 319 264 219 202	1.0 1.3 1.7 2.0 2.9	8.0	5.6	90L/2D	3.5 3.2 3.1 2.9 2.8	4.3 4.0 3.8 3.5 3.5	7.7 7.1 6.7 6.2 6.2	9.6 8.9 8.4 7.8 7.7	5.8 5.3 5.0 4.7 4.6	45	47	43	46	50	304-318
	PL 1001	8.67 6.75	103.8 133.3	195 152	1.2 2.3	12.0	8.4	112M/6C	2.8 2.5	3.4 3.1	6.1 5.5	7.7 6.9	4.6 4.1	51	53	49	52	56	304-318
	PL 1001	8.67	161.5	126	1.7	12.0	8.4	100L/4C	2.4	3.0	5.3	6.7	4.0	47	49	45	48	52	304-318
3.00	PL 90004	1623.2 1345.0	0.6 0.7	44809 37129	2.3 2.7	30.0	21.0	132M/6A	310.0 310.0	432.0 432.0	-	-	232.5 232.5	738	-	642	664	912	576-585
	PL 65004	1008.1	0.9	27829	3.0	25.0	17.5	132M/6A	156.0	216.0	-	-	117.0	550	-	492	506	658	556-569
	PL 50004	1982.0 1672.3 1387.4 1258.4 1151.0 1061.8 952.6 878.7 789.4	0.5 0.5 0.6 0.7 0.8 0.8 0.9 1.0 1.1	54714 46164 38299 34738 31774 29311 26297 24257 21792	0.9 1.3 1.5 1.3 1.7 1.8 2.0 2.2 2.3	20.0	14.0	132M/6A	178.0 178.0 178.0 178.0 178.0 178.0 178.0 178.0 178.0	246.0 246.0 246.0 246.0 246.0 246.0 246.0 246.0 246.0	- - - - - - - - -	- - - - - - - - -	133.5 133.5 133.5 133.5 133.5 133.5 133.5 133.5 133.5	458	-	400	413	566	536-549
	PL 50004	1982.0 1672.3 1387.4 1258.4 1151.0 1061.8 952.6	0.7 0.8 1.0 1.1 1.2 1.3 1.5	35173 29677 24621 22332 20426 18843 16905	1.3 1.8 2.1 1.8 2.5 2.6 2.9	20.0	14.0	100L/4D	178.0 178.0 178.0 178.0 178.0 178.0 178.0	246.0 246.0 246.0 246.0 246.0 246.0 246.0	- - - - - - -	- - - - - - -	133.5 133.5 133.5 133.5 133.5 133.5 133.5	435	-	377	390	543	536-549
	PL 50004	1982.0	1.4	17587	2.2	20.0	14.0	100L/2C	178.0	246.0	-	-	133.5	435	-	377	390	543	536-549
	PL 35004	1289.7 1067.3 987.0 816.8 762.5 703.4 677.7 583.5 496.0	0.7 0.8 0.9 1.1 1.2 1.3 1.3 1.5 1.8	35602 29463 27246 22548 21049 19418 18708 16108 13692	1.1 1.3 1.4 1.6 1.7 1.8 1.9 2.2 2.9	17.0	11.9	132M/6A	144.0 144.0 144.0 144.0 144.0 144.0 144.0 122.4 122.4	204.0 204.0 204.0 204.0 204.0 204.0 204.0 173.4 173.4	- - - - - - - - -	- - - - - - - - -	108.0 108.0 108.0 108.0 108.0 108.0 108.0 91.8 91.8	326	-	290	298	389	516-529
	PL 35004	1289.7 1067.3 987.0 816.8 762.5 703.4 677.7	1.1 1.3 1.4 1.7 1.8 2.0 2.1	22887 18941 17516 14495 13531 12483 12027	1.6 1.9 2.0 2.4 2.5 2.6 2.7	17.0	11.9	100L/4D	144.0 144.0 144.0 122.4 122.4 122.4 122.4	204.0 204.0 204.0 173.4 173.4 173.4 173.4	- - - - - - -	- - - - - - -	108.0 108.0 108.0 91.8 91.8 91.8 91.8	303	-	267	275	366	516-529
	PL 35004	1289.7	2.2	11444	2.8	17.0	11.9	100L/2C	122.4	173.4	-	-	91.8	303	-	267	275	366	516-529

P1 (kW)		iges	n2 (rpm)	M2 (Nm)	fs	Pt (20°C) (kW)	Pt (40°C) (kW)	Motor IE2	FR (kN)					~ Kg					mm
									MC	MS	PC	PS	CPC	M...	P...	F	FS	CPC	
3.00	PL 30004	1425.1	0.6	39340	0.8	17.0	11.9	132M/6A	90.0	137.0	-	-	67.5	320	-	279	287	383	496-509
		1015.5	0.9	28033	1.0				90.0	137.0	-	-	67.5						
		838.9	1.1	23158	1.6				90.0	137.0	-	-	67.5						
		752.6	1.2	20776	1.7				90.0	137.0	-	-	67.5						
		694.3	1.3	19166	1.8				90.0	137.0	-	-	67.5						
		623.7	1.4	17217	2.0				90.0	137.0	-	-	67.5						
		576.0	1.6	15901	2.1				76.5	116.5	-	-	57.4						
		517.4	1.7	14283	2.3				76.5	116.5	-	-	57.4						
		477.3	1.9	13176	2.4				76.5	116.5	-	-	57.4						
		427.1	2.1	11790	2.7				76.5	116.5	-	-	57.4						
		396.0	2.3	10932	2.9				76.5	116.5	-	-	57.4						
		379.6	2.4	10479	2.9				76.5	116.5	-	-	57.4						
	PL 30004	1425.1	1.0	25290	1.1	17.0	11.9	100L/4D	90.0	137.0	-	-	67.5	297	-	256	264	360	496-509
		1015.5	1.4	18021	1.5				90.0	137.0	-	-	67.5						
		838.9	1.7	14887	2.2				76.5	116.5	-	-	57.4						
		752.6	1.9	13356	2.4				76.5	116.5	-	-	57.4						
		694.3	2.0	12321	2.6				76.5	116.5	-	-	57.4						
		623.7	2.2	11068	2.8				76.5	116.5	-	-	57.4						
		576.0	2.4	10222	3.0				76.5	116.5	-	-	57.4						
	PL 30004	1425.1	2.0	12645	1.9	17.0	11.9	100L/2C	76.5	116.5	-	-	57.4	297	-	256	264	360	496-509
		1015.5	2.8	9011	2.6				69.8	106.2	-	-	52.3						
	PL 25004	1272.4	0.7	35125	0.8	15.0	10.5	132M/6A	90.0	137.0	-	-	67.5	287	-	251	259	348	476-489
		1126.9	0.8	31108	0.9				90.0	137.0	-	-	67.5						
		1013.4	0.9	27975	1.0				90.0	137.0	-	-	67.5						
		934.9	1.0	25808	1.1				90.0	137.0	-	-	67.5						
		873.6	1.0	24116	1.2				90.0	137.0	-	-	67.5						
		803.1	1.1	22170	1.2				90.0	137.0	-	-	67.5						
		752.3	1.2	20767	1.3				90.0	137.0	-	-	67.5						
		697.5	1.3	19255	1.8				90.0	137.0	-	-	67.5						
		617.8	1.5	17055	2.0				90.0	137.0	-	-	67.5						
		556.9	1.6	15373	2.2				76.5	116.5	-	-	57.4						
		493.2	1.8	13615	2.4				76.5	116.5	-	-	57.4						
		455.5	2.0	12574	2.5				76.5	116.5	-	-	57.4						
		424.3	2.1	11713	2.7				76.5	116.5	-	-	57.4						
		408.4	2.2	11274	2.8				76.5	116.5	-	-	57.4						
		374.0	2.4	10324	3.0				76.5	116.5	-	-	57.4						
	PL 25004	1529.3	0.9	27139	0.8	15.0	10.5	100L/4D	90.0	137.0	-	-	67.5	264	-	228	236	325	476-489
		1476.0	0.9	26193	1.1				90.0	137.0	-	-	67.5						
		1354.5	1.0	24037	0.9				90.0	137.0	-	-	67.5						
		1272.4	1.1	22580	1.2				90.0	137.0	-	-	67.5						
		1126.9	1.2	19998	1.3				90.0	137.0	-	-	67.5						
		1013.4	1.4	17984	1.5				90.0	137.0	-	-	67.5						
		934.9	1.5	16591	1.6				90.0	137.0	-	-	67.5						
		873.6	1.6	15503	1.7				76.5	116.5	-	-	57.4						
		803.1	1.7	14252	1.8				76.5	116.5	-	-	57.4						
		752.3	1.9	13350	1.9				76.5	116.5	-	-	57.4						
		697.5	2.0	12378	2.6				76.5	116.5	-	-	57.4						
		617.8	2.3	10964	2.8				76.5	116.5	-	-	57.4						
	PL 25004	1774.0	1.6	15741	1.3	15.0	10.5	100L/2C	76.5	116.5	-	-	57.4	264	-	228	236	325	476-489
		1529.3	1.8	13570	1.4				76.5	116.5	-	-	57.4						
		1476.0	1.9	13097	1.9				76.5	116.5	-	-	57.4						
		1354.5	2.1	12019	1.6				76.5	116.5	-	-	57.4						
		1272.4	2.2	11290	2.1				76.5	116.5	-	-	57.4						
		1126.9	2.5	9999	2.4				76.5	116.5	-	-	57.4						
		1013.4	2.8	8992	2.6				69.8	106.2	-	-	52.3						
		934.9	3.0	8295	2.8				69.8	106.2	-	-	52.3						
		873.6	3.2	7752	2.9				69.8	106.2	-	-	52.3						
	PL 18004	849.8	1.1	23459	0.8	13.0	9.1	132M/6A	60.0	106.0	140.0	186.0	45.0	208	235	177	213	258	452-469
		818.8	1.1	22603	0.9				60.0	106.0	140.0	186.0	45.0						
		770.5	1.2	21270	1.0				60.0	106.0	140.0	186.0	45.0						
		720.0	1.3	19876	1.0				60.0	106.0	140.0	186.0	45.0						
		677.9	1.3	18714	1.1				60.0	106.0	140.0	186.0	45.0						
		620.0	1.5	17115	1.2				60.0	106.0	140.0	186.0	45.0						
		549.1	1.6	15158	1.3				51.0	90.1	119.0	158.1	38.3						
		489.2	1.8	13504	1.4				51.0	90.1	119.0	158.1	38.3						
		438.4	2.1	12102	1.5				51.0	90.1	119.0	158.1	38.3						
		377.2	2.4	10413	1.7				51.0	90.1	119.0	158.1	38.3						
		348.6	2.6	9623	1.9				46.5	82.2	108.5	144.2	34.9						

P1 (kW)		iges	n2 (rpm)	M2 (Nm)	fs	Pt (20°C) (kW)	Pt (40°C) (kW)	Motor IE2	FR (kN)					~ Kg					mm
									MC	MS	PC	PS	CPC	M...	P...	F	FS	CPC	
3.00	PL 18004	1216.4	1.2	21587	0.8	13.0	9.1	100L/4D	60.0	106.0	140.0	186.0	45.0	185	212	154	190	235	452-469
		1113.0	1.3	19752	0.9				60.0	106.0	140.0	186.0	45.0						
		987.4	1.4	17523	1.0				60.0	106.0	140.0	186.0	45.0						
		928.8	1.5	16483	1.0				51.0	90.1	119.0	158.1	38.3						
		849.8	1.6	15081	1.1				51.0	90.1	119.0	158.1	38.3						
		818.8	1.7	14531	1.3				51.0	90.1	119.0	158.1	38.3						
		770.5	1.8	13673	1.4				51.0	90.1	119.0	158.1	38.3						
		720.0	1.9	12777	1.5				51.0	90.1	119.0	158.1	38.3						
		677.9	2.1	12030	1.5				51.0	90.1	119.0	158.1	38.3						
		620.0	2.3	11003	1.7				51.0	90.1	119.0	158.1	38.3						
		549.1	2.5	9744	1.8				46.5	82.2	108.5	144.2	34.9						
		489.2	2.9	8681	2.0				46.5	82.2	108.5	144.2	34.9						
		438.4	3.2	7780	2.2				46.5	82.2	108.5	144.2	34.9						
		377.2	3.7	6694	2.5				43.5	76.9	101.5	134.9	32.6						
		348.6	4.0	6186	2.7				43.5	76.9	101.5	134.9	32.6						
	PL 18004	1216.4	2.3	10793	1.5	13.0	9.1	100L/2C	51.0	90.1	119.0	158.1	38.3	185	212	154	190	235	452-469
		1113.0	2.5	9876	1.6				46.5	82.2	108.5	144.2	34.9						
		987.4	2.8	8761	1.8				46.5	82.2	108.5	144.2	34.9						
		928.8	3.0	8241	1.8				46.5	82.2	108.5	144.2	34.9						
		849.8	3.3	7540	2.0				46.5	82.2	108.5	144.2	34.9						
		818.8	3.4	7265	2.3				46.5	82.2	108.5	144.2	34.9						
		770.5	3.6	6837	2.4				43.5	76.9	101.5	134.9	32.6						
		720.0	3.9	6389	2.6				43.5	76.9	101.5	134.9	32.6						
		677.9	4.1	6015	2.7				43.5	76.9	101.5	134.9	32.6						
		620.0	4.5	5501	2.9				40.5	71.6	94.5	125.6	30.4						
	PL 16004	640.5	1.4	17681	1.0	11.0	7.7	132M/6A	60.0	106.0	140.0	186.0	45.0	194	221	163	199	244	428-445
		612.0	1.5	16894	1.0				60.0	106.0	140.0	186.0	45.0						
		576.1	1.6	15903	0.8				51.0	90.1	119.0	158.1	38.3						
		554.4	1.6	15304	1.3				51.0	90.1	119.0	158.1	38.3						
		531.4	1.7	14669	1.1				51.0	90.1	119.0	158.1	38.3						
		507.7	1.8	14015	1.4				51.0	90.1	119.0	158.1	38.3						
		459.9	2.0	12696	1.5				51.0	90.1	119.0	158.1	38.3						
		440.9	2.0	12171	1.3				51.0	90.1	119.0	158.1	38.3						
		421.2	2.1	11627	1.6				51.0	90.1	119.0	158.1	38.3						
		388.6	2.3	10727	1.7				51.0	90.1	119.0	158.1	38.3						
		352.0	2.6	9717	1.8				46.5	82.2	108.5	144.2	34.9						
	PL 16004	1008.9	1.4	17904	1.0	11.0	7.7	100L/4D	60.0	106.0	140.0	186.0	45.0	171	198	140	176	221	428-445
		907.3	1.5	16101	0.8				51.0	90.1	119.0	158.1	38.3						
		806.4	1.7	14311	0.9				51.0	90.1	119.0	158.1	38.3						
		724.4	1.9	12855	1.0				51.0	90.1	119.0	158.1	38.3						
		640.5	2.2	11366	1.4				51.0	90.1	119.0	158.1	38.3						
		612.0	2.3	10861	1.5				51.0	90.1	119.0	158.1	38.3						
		576.1	2.4	10224	1.2				51.0	90.1	119.0	158.1	38.3						
		554.4	2.5	9839	1.8				46.5	82.2	108.5	144.2	34.9						
		531.4	2.6	9430	1.6				46.5	82.2	108.5	144.2	34.9						
		507.7	2.8	9010	2.0				46.5	82.2	108.5	144.2	34.9						
		459.9	3.0	8161	2.1				46.5	82.2	108.5	144.2	34.9						
		440.9	3.2	7824	1.9				46.5	82.2	108.5	144.2	34.9						
		421.2	3.3	7475	2.3				46.5	82.2	108.5	144.2	34.9						
		388.6	3.6	6896	2.4				43.5	76.9	101.5	134.9	32.6						
		352.0	4.0	6247	2.6				43.5	76.9	101.5	134.9	32.6						
	PL 16004	1849.8	1.5	16413	0.8	11.0	7.7	100L/2C	51.0	90.1	119.0	158.1	38.3	171	198	140	176	221	428-445
		1530.9	1.8	13584	0.9				51.0	90.1	119.0	158.1	38.3						
		1270.1	2.2	11270	1.1				51.0	90.1	119.0	158.1	38.3						
		1093.7	2.6	9705	1.2				46.5	82.2	108.5	144.2	34.9						
		1008.9	2.8	8952	1.7				46.5	82.2	108.5	144.2	34.9						
		907.3	3.1	8051	1.4				46.5	82.2	108.5	144.2	34.9						
		806.4	3.5	7155	1.6				46.5	82.2	108.5	144.2	34.9						
		724.4	3.9	6428	1.7				43.5	76.9	101.5	134.9	32.6						
		640.5	4.4	5683	2.5				43.5	76.9	101.5	134.9	32.6						
		612.0	4.6	5430	2.6				40.5	71.6	94.5	125.6	30.4						
		576.1	4.9	5112	2.1				40.5	71.6	94.5	125.6	30.4						
		531.4	5.3	4715	2.9				40.5	71.6	94.5	125.6	30.4						
	PL 10004	554.4	1.6	15304	0.9	11.0	7.7	132M/6A	55.3	80.8	-	-	41.4	186	-	153	191	236	410-421
		531.4	1.7	14669	0.8				55.3	80.8	-	-	41.4						
		507.7	1.8	14015	0.9				55.3	80.8	-	-	41.4						
		459.9	2.0	12696	1.0				55.3	80.8	-	-	41.4						
		440.9	2.0	12171	0.9				55.3	80.8	-	-	41.4						
		421.2	2.1	11627	1.1				55.3	80.8	-	-	41.4						
		388.6	2.3	10727	1.1				55.3	80.8	-	-	41.4						
		352.0	2.6	9717	1.2				50.4	73.6	-	-	37.8						

P1 (kW)		iges	n2 (rpm)	M2 (Nm)	fs	Pt (20°C) (kW)	Pt (40°C) (kW)	Motor IE2	FR (kN)					~ Kg					mm
									MC	MS	PC	PS	CPC	M...	P...	F	FS	CPC	
3.00	PL 10004	640.5	2.2	11366	0.9	11.0	7.7	100L/4D	55.3	80.8	-	-	41.4	163	-	130	168	213	410-421
		612.0	2.3	10861	1.0				55.3	80.8	-	-	41.4						
		576.1	2.4	10224	0.8				55.3	80.8	-	-	41.4						
		554.4	2.5	9839	1.2				50.4	73.6	-	-	37.8						
		531.4	2.6	9430	1.1				50.4	73.6	-	-	37.8						
		507.7	2.8	9010	1.3				50.4	73.6	-	-	37.8						
		459.9	3.0	8161	1.4				50.4	73.6	-	-	37.8						
		440.9	3.2	7824	1.3				50.4	73.6	-	-	37.8						
		421.2	3.3	7475	1.5				50.4	73.6	-	-	37.8						
		388.6	3.6	6896	1.6				47.1	68.9	-	-	35.3						
		352.0	4.0	6247	1.8				47.1	68.9	-	-	35.3						
	PL 10004	1093.7	2.6	9705	0.8	11.0	7.7	100L/2C	50.4	73.6	-	-	37.8	163	-	130	168	213	410-421
		1008.9	2.8	8952	1.1				50.4	73.6	-	-	37.8						
		907.3	3.1	8051	1.0				50.4	73.6	-	-	37.8						
		806.4	3.5	7155	1.1				50.4	73.6	-	-	37.8						
		724.4	3.9	6428	1.2				47.1	68.9	-	-	35.3						
		640.5	4.4	5683	1.7				47.1	68.9	-	-	35.3						
		612.0	4.6	5430	1.7				43.9	64.1	-	-	32.9						
		576.1	4.9	5112	1.4				43.9	64.1	-	-	32.9						
		554.4	5.1	4919	2.2				43.9	64.1	-	-	32.9						
		531.4	5.3	4715	1.9				43.9	64.1	-	-	32.9						
		507.7	5.5	4505	2.3				39.0	57.0	-	-	29.3						
		459.9	6.1	4081	2.6				39.0	57.0	-	-	29.3						
		440.9	6.4	3912	2.3				39.0	57.0	-	-	29.3						
		421.2	6.6	3737	2.7				37.4	54.6	-	-	28.0						
		388.6	7.2	3448	2.9				37.4	54.6	-	-	28.0						
	PL 7004	332.4	2.7	9176	0.8	8.0	5.6	132M/6A	-	-	89.1	107.0	66.8	-	149	131	152	166	392-400
		301.1	3.0	8312	0.8				-	-	89.1	107.0	66.8						
	PL 7004	474.3	3.0	8417	0.8	8.0	5.6	100L/4D	-	-	89.1	107.0	66.8	-	126	108	129	143	392-400
		434.4	3.2	7709	0.9				-	-	89.1	107.0	66.8						
		400.7	3.5	7111	0.9				-	-	89.1	107.0	66.8						
		347.9	4.0	6174	1.0				-	-	83.4	100.1	62.5						
		332.4	4.2	5899	1.1				-	-	83.4	100.1	62.5						
		301.1	4.6	5343	1.2				-	-	77.6	93.2	58.2						
	PL 7004	832.3	3.4	7385	0.8	8.0	5.6	100L/2C	-	-	89.1	107.0	66.8	-	126	108	129	143	392-400
		768.7	3.6	6821	0.9				-	-	83.4	100.1	62.5						
		747.3	3.7	6631	0.8				-	-	83.4	100.1	62.5						
		661.9	4.2	5873	1.0				-	-	83.4	100.1	62.5						
		632.4	4.4	5611	1.0				-	-	83.4	100.1	62.5						
		571.7	4.9	5073	1.2				-	-	77.6	93.2	58.2						
		523.6	5.3	4646	1.3				-	-	77.6	93.2	58.2						
		474.3	5.9	4209	1.4				-	-	69.0	82.8	51.8						
		434.4	6.4	3854	1.5				-	-	69.0	82.8	51.8						
		400.7	7.0	3555	1.7				-	-	66.1	79.4	49.6						
		347.9	8.0	3087	1.9				-	-	63.3	75.9	47.4						
		332.4	8.4	2949	1.9				-	-	63.3	75.9	47.4						
		301.1	9.3	2672	2.1				-	-	60.4	72.5	45.3						
	PL 5004	612.0	4.6	5430	0.8	6.0	4.2	100L/2C	23.6	30.4	42.5	49.3	31.9	88	97	79	90	101	370-385
		554.4	5.1	4919	0.8				23.6	30.4	42.5	49.3	31.9						
		511.4	5.5	4538	0.9				23.6	30.4	42.5	49.3	31.9						
		468.4	6.0	4156	1.1				21.0	27.0	37.8	43.8	28.4						
		424.3	6.6	3765	1.0				20.1	25.9	36.2	42.0	27.2						
		413.9	6.8	3673	1.2				20.1	25.9	36.2	42.0	27.2						
		388.6	7.2	3448	1.2				20.1	25.9	36.2	42.0	27.2						
		365.8	7.7	3246	1.0				19.3	24.8	34.7	40.2	26.0						
		352.0	8.0	3123	1.2				19.3	24.8	34.7	40.2	26.0						
	PL 2504	352.0	6.8	3673	0.8	4.0	2.8	100L/2C	20.1	25.9	36.2	42.0	27.2	82	91	73	84	95	348-363
		388.6	7.2	3448	0.8				20.1	25.9	36.2	42.0	27.2						
		413.9	8.0	3123	0.8				19.3	24.8	34.7	40.2	26.0						
	PL 25003	317.2	2.8	9074	2.0	20.0	14.0	132M/6A	69.8	106.2	-	-	52.3	281	-	245	253	342	476-489
		262.8	3.4	7518	2.3				69.8	106.2	-	-	52.3						
		226.6	4.0	6482	2.6				65.3	99.3	-	-	48.9						
	PL 25003	317.2	4.4	5833	2.8	20.0	14.0	100L/4D	65.3	99.3	-	-	48.9	258	-	222	230	319	476-489
	PL 18003	180.2	5.0	5155	2.7	17.0	11.9	132M/6A	40.5	71.6	94.5	125.6	30.4	201	228	170	206	251	452-469

P1 (kW)		iges	n2 (rpm)	M2 (Nm)	fs	Pt (20°C) (kW)	Pt (40°C) (kW)	Motor IE2	FR (kN)					~ Kg					mm
									MC	MS	PC	PS	CPC	M...	P...	F	FS	CPC	
3.00	PL 16003	330.3	2.7	9449	2.9	15.0	10.5	132M/6A	46.5	82.2	108.5	144.2	34.9	188	215	156	193	238	428-445
		274.1	3.3	7841	2.7				46.5	82.2	108.5	144.2	34.9						
		235.4	3.8	6734	2.5				43.5	76.9	101.5	134.9	32.6						
		226.8	4.0	6488	2.3				43.5	76.9	101.5	134.9	32.6						
		209.7	4.3	5999	2.0				43.5	76.9	101.5	134.9	32.6						
		195.3	4.6	5587	1.9				40.5	71.6	94.5	125.6	30.4						
		188.2	4.8	5384	1.4				40.5	71.6	94.5	125.6	30.4						
		155.9	5.8	4460	1.7				36.0	63.6	84.0	111.6	27.0						
		144.0	6.3	4119	1.2				36.0	63.6	84.0	111.6	27.0						
		129.4	7.0	3702	1.5				34.5	61.0	80.5	107.0	25.9						
		118.5	7.6	3390	1.0				33.0	58.3	77.0	102.3	24.8						
	PL 16003	330.3	4.2	6074	1.4	15.0	10.5	100L/4D	43.5	76.9	101.5	134.9	32.6	165	192	133	170	215	428-445
		274.1	5.1	5041	2.1				40.5	71.6	94.5	125.6	30.4						
		235.4	5.9	4329	1.8				36.0	63.6	84.0	111.6	27.0						
		226.8	6.2	4171	2.5				36.0	63.6	84.0	111.6	27.0						
		209.7	6.7	3856	2.0				34.5	61.0	80.5	107.0	25.9						
		195.3	7.2	3592	2.8				34.5	61.0	80.5	107.0	25.9						
		188.2	7.4	3461	2.9				34.5	61.0	80.5	107.0	25.9						
	PL 16003	330.3	8.5	3037	2.4	15.0	10.5	100L/2C	33.0	58.3	77.0	102.3	24.8	165	192	133	170	215	428-445
	PL 10003	274.1	3.3	7841	1.0	15.0	10.5	132M/6A	50.4	73.6	-	-	37.8	180	-	147	185	230	410-421
		235.4	3.8	6734	0.8				47.1	68.9	-	-	35.3						
		226.8	4.0	6488	1.2				47.1	68.9	-	-	35.3						
		209.7	4.3	5999	0.9				47.1	68.9	-	-	35.3						
		195.3	4.6	5587	1.3				43.9	64.1	-	-	32.9						
		188.2	4.8	5384	1.3				43.9	64.1	-	-	32.9						
		173.6	5.2	4966	1.8				43.9	64.1	-	-	32.9						
		155.9	5.8	4460	1.6				39.0	57.0	-	-	29.3						
		144.0	6.3	4119	2.2				39.0	57.0	-	-	29.3						
		129.4	7.0	3702	1.8				37.4	54.6	-	-	28.0						
		124.0	7.3	3547	2.5				37.4	54.6	-	-	28.0						
		118.5	7.6	3390	2.0				35.8	52.3	-	-	26.8						
		109.3	8.2	3127	2.7				35.8	52.3	-	-	26.8						
	PL 10003	330.3	4.2	6074	0.9	15.0	10.5	100L/4D	47.1	68.9	-	-	35.3	157	-	124	162	207	410-421
		274.1	5.1	5041	1.4				43.9	64.1	-	-	32.9						
		235.4	5.9	4329	1.2				39.0	57.0	-	-	29.3						
		226.8	6.2	4171	1.7				39.0	57.0	-	-	29.3						
		209.7	6.7	3856	1.4				37.4	54.6	-	-	28.0						
		195.3	7.2	3592	1.9				37.4	54.6	-	-	28.0						
		188.2	7.4	3461	1.9				37.4	54.6	-	-	28.0						
		173.6	8.1	3192	2.7				35.8	52.3	-	-	26.8						
		155.9	9.0	2867	2.3				34.1	49.9	-	-	25.6						
		129.4	10.8	2380	2.7				32.5	47.5	-	-	24.4						
		118.5	11.8	2179	2.9				32.5	47.5	-	-	24.4						
	PL 10003	209.7	8.5	3037	1.7	15.0	10.5	100L/2C	35.8	52.3	-	-	26.8	157	-	124	162	207	410-421
		226.8	10.2	2520	2.6				32.5	47.5	-	-	24.4						
		235.4	11.9	2164	2.2				32.5	47.5	-	-	24.4						
		274.1	12.3	2085	3.0				32.5	47.5	-	-	24.4						
		330.3	13.4	1928	2.4				30.6	44.7	-	-	22.9						
	PL 7003	216.7	4.2	6199	0.9	14.0	9.8	132M/6A	-	-	83.4	100.1	62.5	-	143	125	146	160	392-400
		194.9	4.6	5575	0.8				-	-	77.6	93.2	58.2						
		174.4	5.2	4989	1.0				-	-	77.6	93.2	58.2						
		155.4	5.8	4445	1.1				-	-	69.0	82.8	51.8						
		148.8	6.0	4257	1.3				-	-	69.0	82.8	51.8						
		139.2	6.5	3982	1.2				-	-	69.0	82.8	51.8						
		127.9	7.0	3659	1.6				-	-	66.1	79.4	49.6						
		112.9	8.0	3230	1.6				-	-	63.3	75.9	47.4						
		102.1	8.8	2921	1.9				-	-	60.4	72.5	45.3						
		93.7	9.6	2680	1.9				-	-	57.5	69.0	43.1						
		88.4	10.2	2529	1.8				-	-	57.5	69.0	43.1						
		78.3	11.5	2240	2.2				-	-	57.5	69.0	43.1						
		71.7	12.6	2051	2.4				-	-	54.1	64.9	40.5						
		64.8	13.9	1854	2.8				-	-	54.1	64.9	40.5						
	PL 7003	283.8	4.9	5219	0.8	14.0	9.8	100L/4D	-	-	77.6	93.2	58.2	-	120	102	123	137	392-400
		244.7	5.7	4500	1.1				-	-	69.0	82.8	51.8						
		216.7	6.5	3985	1.4				-	-	69.0	82.8	51.8						
		194.9	7.2	3584	1.1				-	-	66.1	79.4	49.6						
		174.4	8.0	3207	1.4				-	-	63.3	75.9	47.4						
		155.4	9.0	2858	1.6				-	-	60.4	72.5	45.3						
		148.8	9.4	2736	1.9				-	-	60.4	72.5	45.3						
		139.2	10.1	2560	1.7				-	-	57.5	69.0	43.1						
		127.9	10.9	2352	2.3				-	-	57.5	69.0	43.1						
		112.9	12.4	2076	2.3				-	-	55.8	66.9	41.8						
		102.1	13.7	1878	2.8				-	-	55.8	66.9	41.8						
		93.7	14.9	1723	2.8				-	-	54.1	64.9	40.5						
		88.4	15.8	1626	2.5				-	-	54.1	64.9	40.5						

P1 (kW)		iges	n2 (rpm)	M2 (Nm)	fs	Pt (20°C) (kW)	Pt (40°C) (kW)	Motor IE2	FR (kN)					~ Kg					mm
									MC	MS	PC	PS	CPC	M...	P...	F	FS	CPC	
3.00	PL 7003	342.6	8.2	3150	1.0	14.0	9.8	100L/2C	-	-	63.3	75.9	47.4	-	120	102	123	137	392-400
		283.8	9.9	2610	1.4				-	-	57.5	69.0	43.1						
		244.7	11.4	2250	1.9				-	-	57.5	69.0	43.1						
		216.7	12.9	1993	2.4				-	-	54.1	64.9	40.5						
		194.9	14.4	1792	2.0				-	-	54.1	64.9	40.5						
		174.4	16.1	1604	2.6				-	-	54.1	64.9	40.5						
		155.4	18.0	1429	2.8				-	-	47.7	57.3	35.8						
		139.2	20.1	1280	3.0				-	-	47.7	57.3	35.8						
	PL 5003	155.9	5.8	4460	0.9	10.0	7.0	132M/6A	21.0	27.0	29.6	43.8	28.4	105	114	96	107	118	370-385
		149.5	6.0	4277	0.8				21.0	27.0	29.6	43.8	28.4						
		129.4	7.0	3702	1.1				20.1	25.9	29.6	42.0	27.2						
		119.3	7.5	3413	1.1				19.3	24.8	31.5	40.2	26.0						
		99.0	9.1	2832	1.3				18.4	23.6	31.5	38.3	24.8						
		90.7	9.9	2595	1.6				17.5	22.5	31.5	36.5	23.6						
		82.1	11.0	2349	1.5				17.5	22.5	33.1	36.5	23.6						
		75.2	12.0	2151	1.8				17.5	22.5	34.7	36.5	23.6						
		62.9	14.3	1799	1.9				16.5	21.2	36.2	34.3	22.2						
		57.6	15.6	1648	2.3				16.5	21.2	37.8	34.3	22.2						
		52.1	17.3	1490	2.2				16.5	21.2	37.8	34.3	22.2						
	PL 5003	235.4	5.9	4329	0.8	10.0	7.0	100L/4D	21.0	27.0	37.8	43.8	28.4	82	91	73	84	95	370-385
		195.3	7.2	3592	0.9				19.3	24.8	34.7	40.2	26.0						
		173.6	8.1	3192	0.9				19.3	24.8	34.7	40.2	26.0						
		162.0	8.6	2979	1.0				18.4	23.6	33.1	38.3	24.8						
		155.9	9.0	2867	1.3				18.4	23.6	33.1	38.3	24.8						
		149.5	9.4	2749	1.1				18.4	23.6	33.1	38.3	24.8						
		129.4	10.8	2380	1.5				17.5	22.5	31.5	36.5	23.6						
		119.3	11.7	2194	1.6				17.5	22.5	31.5	36.5	23.6						
		99.0	14.1	1821	1.9				16.5	21.2	29.6	34.3	22.2						
		90.7	15.4	1668	2.2				16.5	21.2	29.6	34.3	22.2						
		82.1	17.1	1510	2.2				15.6	20.0	28.0	32.5	21.0						
		75.2	18.6	1383	2.6				15.6	20.0	28.0	32.5	21.0						
		62.9	22.3	1157	2.8				14.0	18.0	25.2	29.2	18.9						
	PL 5003	302.2	9.3	2779	1.1	10.0	7.0	100L/2C	18.4	23.6	33.1	38.3	24.8	82	91	73	84	95	370-385
		273.4	10.2	2514	1.0				17.5	22.5	31.5	36.5	23.6						
		235.4	11.9	2164	1.3				17.5	22.5	31.5	36.5	23.6						
		195.3	14.3	1796	1.6				16.5	21.2	29.6	34.3	22.2						
		173.6	16.1	1596	1.5				16.5	21.2	29.6	34.3	22.2						
		162.0	17.3	1490	1.8				16.5	21.2	29.6	34.3	22.2						
		155.9	18.0	1433	2.3				14.5	18.7	26.1	30.3	19.6						
		149.5	18.7	1375	2.0				14.5	18.7	26.1	30.3	19.6						
		129.4	21.6	1190	2.7				14.5	18.7	26.1	30.3	19.6						
		119.3	23.5	1097	2.9				13.7	17.6	24.6	28.5	18.4						
	PL 2503	119.3	7.5	3413	0.8	8.0	5.6	132M/6A	19.3	24.8	34.7	40.2	26.0	99	108	90	101	112	348-363
		99.0	9.1	2832	0.9				18.4	23.6	33.1	38.3	24.8						
		90.7	9.9	2595	1.1				17.5	22.5	31.5	36.5	23.6						
		82.1	11.0	2349	1.1				17.5	22.5	31.5	36.5	23.6						
		75.2	12.0	2151	1.3				17.5	22.5	31.5	36.5	23.6						
		62.9	14.3	1799	1.3				16.5	21.2	29.6	34.3	22.2						
		57.6	15.6	1648	1.6				16.5	21.2	29.6	34.3	22.2						
		52.1	17.3	1490	1.5				16.5	21.2	29.6	34.3	22.2						
	PL 2503	155.9	9.0	2867	0.9	8.0	5.6	100L/4D	18.4	23.6	33.1	38.3	24.8	76	85	67	78	89	348-363
		149.5	9.4	2749	0.8				18.4	23.6	33.1	38.3	24.8						
		129.4	10.8	2380	1.0				17.5	22.5	31.5	36.5	23.6						
		119.3	11.7	2194	1.1				17.5	22.5	31.5	36.5	23.6						
		99.0	14.1	1821	1.3				16.5	21.2	29.6	34.3	22.2						
		90.7	15.4	1668	1.5				16.5	21.2	29.6	34.3	22.2						
		82.1	17.1	1510	1.5				15.6	20.0	28.0	32.5	21.0						
		75.2	18.6	1383	1.8				15.6	20.0	28.0	32.5	21.0						
		62.9	22.3	1157	1.9				14.0	18.0	25.2	29.2	18.9						
		57.6	24.3	1059	2.2				13.7	17.6	24.6	28.5	18.4						
		52.1	26.9	958	2.2				13.3	17.1	23.9	27.7	18.0						
	PL 2503	302.2	9.3	2779	0.8	8.0	5.6	100L/2C	18.4	23.6	33.1	38.3	24.8	76	85	67	78	89	348-363
		235.4	11.9	2164	0.9				17.5	22.5	31.5	36.5	23.6						
		195.3	14.3	1796	1.1				16.5	21.2	29.6	34.3	22.2						
		173.6	16.1	1596	1.0				16.5	21.2	29.6	34.3	22.2						
		162.0	17.3	1490	1.3				16.5	21.2	29.6	34.3	22.2						
		155.9	18.0	1433	1.6				14.5	18.7	26.1	30.3	19.6						
		149.5	18.7	1375	1.4				14.5	18.7	26.1	30.3	19.6						
		129.4	21.6	1190	1.8				14.5	18.7	26.1	30.3	19.6						
		119.3	23.5	1097	2.0				13.7	17.6	24.6	28.5	18.4						
		99.0	28.3	910	2.3				13.0	16.7	23.3	27.0	17.5						
		90.7	30.9	834	2.8				13.0	16.7	23.3	27.0	17.5						
		82.1	34.1	755	2.7				12.3	15.8	22.1	25.6	16.5						

P1 (kW)		iges	n2 (rpm)	M2 (Nm)	fs	Pt (20°C) (kW)	Pt (40°C) (kW)	Motor IE2	FR (kN) MC	MS	PC	PS	CPC	~ Kg M…	P…	F	FS	CPC	mm
3.00	PL 1603	172.6	16.2	1587	0.8	5.0	3.5	100L/2C	5.2	6.3	11.3	14.1	8.5	62	64	60	63	67	326-340
		162.0	17.3	1490	0.8				5.2	6.3	11.3	14.1	8.5						
		134.4	20.8	1236	0.9				4.6	5.6	10.0	12.5	7.5						
		111.5	25.1	1025	1.1				4.3	5.3	9.4	11.7	7.0						
		102.9	27.2	946	1.2				4.3	5.3	9.4	11.7	7.0						
		85.3	32.8	784	1.4				3.9	4.7	8.4	10.5	6.3						
		78.7	35.6	724	1.5				3.9	4.7	8.4	10.5	6.3						
		70.8	39.5	651	1.6				3.7	4.5	8.0	10.1	6.0						
		65.3	42.9	600	1.7				3.6	4.4	7.8	9.8	5.9						
		54.2	51.7	498	2.0				3.5	4.3	7.7	9.6	5.8						
	PL 1603	85.3	16.4	1569	0.8	5.0	3.5	100L/4D	5.2	6.3	11.3	14.1	8.5	62	64	60	63	67	326-340
		78.7	17.8	1447	0.8				4.9	6.0	10.7	13.4	8.0						
		70.8	19.8	1302	0.9				4.6	5.6	10.0	12.5	7.5						
		65.3	21.4	1201	1.0				4.6	5.6	10.0	12.5	7.5						
		54.2	25.8	997	1.1				4.3	5.3	9.4	11.7	7.0						
	PL 1603	54.2	16.6	1550	0.8	5.0	3.5	132M/6A	5.2	6.3	11.3	14.1	8.5	85	87	83	86	90	326-340
	PL 1003	102.9	27.2	946	0.8	5.0	3.5	100L/2C	4.3	5.3	9.4	11.7	7.0	60	62	58	61	65	304-318
		85.3	32.8	784	0.9				3.9	4.7	8.4	10.5	6.3						
		78.7	35.6	724	1.0				3.9	4.7	8.4	10.5	6.3						
		70.8	39.5	651	1.0				3.7	4.5	8.0	10.1	6.0						
		65.3	42.9	600	1.1				3.6	4.4	7.8	9.8	5.9						
		54.2	51.7	498	1.3				3.5	4.3	7.7	9.6	5.8						
	PL 10002	48.9	18.4	1450	3.0	23.0	16.1	132M/6A	27.0	39.4	-	-	20.2	172	-	139	177	222	410-421
	PL 7002	50.8	17.7	1506	1.8	18.0	12.6	132M/6A	-	-	47.7	57.3	35.8	-	137	119	140	153	392-400
		42.1	21.4	1248	2.6				-	-	47.7	57.3	35.8						
	PL 7002	50.8	27.6	968	2.6	18.0	12.6	100L/4D	-	-	43.7	52.4	32.8	-	114	96	117	130	392-400
	PL 5002	48.9	18.4	1450	1.3	15.0	10.5	132M/6A	14.5	18.7	26.1	30.3	19.6	99	108	90	101	112	370-385
		40.5	22.2	1201	1.9				14.5	18.7	26.1	30.3	19.6						
		34.9	25.8	1035	2.5				13.7	17.6	24.6	28.5	18.4						
		28.9	31.1	857	2.9				13.0	16.7	23.3	27.0	17.5						
	PL 5002	48.9	28.6	932	1.9	15.0	10.5	100L/4D	13.3	17.1	23.9	27.7	18.0	76	85	67	78	89	370-385
		40.5	34.6	772	2.8				12.3	15.8	22.1	25.6	16.5						
	PL 2502	48.9	18.4	1450	0.8	12.0	8.4	132M/6A	14.5	18.7	26.1	30.3	19.6	93	102	85	95	106	348-363
		40.5	22.2	1201	1.3				14.5	18.7	26.1	30.3	19.6						
		34.9	25.8	1035	1.7				13.7	17.6	24.6	28.5	18.4						
		28.9	31.1	857	2.0				13.0	16.7	23.3	27.0	17.5						
		23.1	39.0	685	2.9				11.7	15.1	21.1	24.5	15.8						
		18.4	48.9	545	2.9				11.2	14.4	20.2	23.4	15.1						
	PL 2502	62.8	22.3	1197	1.0	12.0	8.4	100L/4D	14.0	18.0	25.2	29.2	18.9	70	79	62	72	83	348-363
		48.9	28.6	932	1.2				13.3	17.1	23.9	27.7	18.0						
		40.5	34.6	772	1.9				12.3	15.8	22.1	25.6	16.5						
		34.9	40.1	665	2.5				11.7	15.1	21.1	24.5	15.8						
		28.9	48.4	551	2.9				11.2	14.4	20.2	23.4	15.1						
	PL 2502	62.8	44.6	598	1.8	12.0	8.4	100L/2C	11.4	14.6	20.5	23.7	15.4	70	79	62	72	83	348-363
		48.9	57.3	466	2.2				10.9	14.0	19.5	22.6	14.6						
	PL 1602	31.4	28.7	931	0.9	8.0	5.6	132M/6A	4.1	5.0	8.9	11.1	6.7	79	81	77	80	84	326-340
		28.9	31.1	857	1.3				4.1	5.0	8.9	11.1	6.7						
		24.0	37.5	711	1.5				3.9	4.7	8.4	10.5	6.3						
		19.9	45.2	590	1.7				3.6	4.4	7.8	9.8	5.9						
		15.2	59.2	451	2.2				3.2	4.0	7.1	8.9	5.3						
		12.6	71.4	374	2.5				3.1	3.8	6.8	8.6	5.1						
	PL 1602	45.6	30.7	869	0.8	8.0	5.6	100L/4D	4.1	5.0	8.9	11.1	6.7	56	58	54	57	61	326-340
		37.8	37.0	720	1.1				3.8	4.6	8.2	10.3	6.2						
		31.4	44.6	598	1.2				3.6	4.4	7.8	9.8	5.9						
		28.9	48.4	551	1.9				3.5	4.3	7.7	9.6	5.8						
		24.0	58.3	457	2.1				3.2	4.0	7.1	8.9	5.3						
		19.9	70.4	379	2.5				3.1	3.8	6.8	8.6	5.1						
	PL 1602	58.5	47.9	557	1.1	8.0	5.6	100L/2C	3.5	4.3	7.7	9.6	5.8	56	58	54	57	61	326-340
		45.6	61.4	434	1.3				3.2	4.0	7.1	8.9	5.3						
		37.8	74.1	360	1.9				3.1	3.8	6.7	8.4	5.0						
		31.4	89.2	299	2.2				2.9	3.5	6.2	7.8	4.7						
	PL 1002	28.9	31.1	857	0.8	8.0	5.6	132M/6A	4.1	5.0	8.9	11.1	6.7	77	79	75	78	82	304-318
		24.0	37.5	711	1.0				3.9	4.7	8.4	10.5	6.3						
		19.9	45.2	590	1.1				3.6	4.4	7.8	9.8	5.9						
		15.2	59.2	451	1.4				3.2	4.0	7.1	8.9	5.3						
		12.6	71.4	374	1.6				3.1	3.8	6.8	8.6	5.1						

P1 (kW)		iges	n2 (rpm)	M2 (Nm)	fs	Pt (20°C) (kW)	Pt (40°C) (kW)	Motor IE2	FR (kN)					~ Kg					mm
									MC	MS	PC	PS	CPC	M...	P...	F	FS	CPC	
3.00	PL 1002	31.4	44.6	598	0.8	8.0	5.6	100L/4D	3.6	4.4	7.8	9.8	5.9	54	56	52	55	59	304-318
		28.9	48.4	551	1.2				3.5	4.3	7.7	9.6	5.8						
		24.0	58.3	457	1.4				3.2	4.0	7.1	8.9	5.3						
		19.9	70.4	379	1.6				3.1	3.8	6.8	8.6	5.1						
		15.2	92.1	290	2.0				2.9	3.5	6.2	7.8	4.7						
		12.6	111.1	240	2.4				2.7	3.3	5.9	7.4	4.5						
	PL 1002	58.5	47.9	557	0.8	8.0	5.6	100L/2C	3.5	4.3	7.7	9.6	5.8	54	56	52	55	59	304-318
		45.6	61.4	434	0.9				3.2	4.0	7.1	8.9	5.3						
		37.8	74.1	360	1.2				3.1	3.8	6.7	8.4	5.0						
		31.4	89.2	299	1.5				2.9	3.5	6.2	7.8	4.7						
		28.9	96.9	275	2.1				2.8	3.5	6.2	7.7	4.6						
		24.0	116.7	229	2.5				2.7	3.3	5.8	7.3	4.4						
		19.9	140.7	190	2.9				2.5	3.1	5.5	6.9	4.1						
	PL 1601	6.75	133.3	207	2.4	12.0	8.4	132M/6A	2.5	3.1	5.5	6.9	4.1	73	75	71	74	78	326-340
	PL 1001	8.67	103.8	266	0.9	12.0	8.4	132M/6A	2.8	3.4	6.1	7.7	4.6	71	73	69	72	76	304-318
		6.75	133.3	207	1.7				2.5	3.1	5.5	6.9	4.1						
		5.60	160.7	172	2.3				2.4	3.0	5.3	6.7	4.0						
	PL 1001	8.67	161.5	171	1.3	12.0	8.4	100L/4D	2.4	3.0	5.3	6.7	4.0	48	50	46	49	53	304-318
		6.75	207.4	133	2.4				2.3	2.8	4.9	6.2	3.7						
	PL 1001	8.67	323.0	86	2.3	12.0	8.4	100L/2C	2.0	2.5	4.4	5.5	3.3	48	50	46	49	53	304-318
4.00	PL 90004	1623.2	0.6	59745	1.7	30.0	21.0	132M/6B	310.0	432.0	-	-	232.5	747	-	651	673	921	576-585
		1345.0	0.7	49505	2.0				310.0	432.0	-	-	232.5						
		1119.0	0.8	41187	2.3				310.0	432.0	-	-	232.5						
		926.1	1.0	34087	2.8				310.0	432.0	-	-	232.5						
		854.4	1.1	31448	2.9				310.0	432.0	-	-	232.5						
	PL 90004	1623.2	0.9	38408	2.5	30.0	21.0	112M/4C	310.0	432.0	-	-	232.5	723	-	627	649	897	576-585
		1345.0	1.0	31825	2.9				310.0	432.0	-	-	232.5						
	PL 65004	1008.1	0.9	37105	2.2	25.0	17.5	132M/6B	156.0	216.0	-	-	117.0	559	-	501	515	667	556-569
		838.8	1.1	30874	2.6				156.0	216.0	-	-	117.0						
		694.2	1.3	25551	3.0				156.0	216.0	-	-	117.0						
	PL 50004	1672.3	0.5	61552	0.9	20.0	14.0	132M/6B	178.0	246.0	-	-	133.5	467	-	409	422	575	536-549
		1387.4	0.6	51066	1.1				178.0	246.0	-	-	133.5						
		1258.4	0.7	46318	1.0				178.0	246.0	-	-	133.5						
		1151.0	0.8	42365	1.3				178.0	246.0	-	-	133.5						
		1061.8	0.8	39082	1.4				178.0	246.0	-	-	133.5						
		952.6	0.9	35062	1.5				178.0	246.0	-	-	133.5						
		878.7	1.0	32342	1.6				178.0	246.0	-	-	133.5						
		789.4	1.1	29055	1.7				178.0	246.0	-	-	133.5						
		686.4	1.3	25264	2.7				178.0	246.0	-	-	133.5						
		616.6	1.5	22695	2.9				178.0	246.0	-	-	133.5						
	PL 50004	1982.0	0.7	46897	0.9	20.0	14.0	112M/4C	178.0	246.0	-	-	133.5	443	-	385	398	551	536-549
		1672.3	0.8	39569	1.4				178.0	246.0	-	-	133.5						
		1387.4	1.0	32828	1.6				178.0	246.0	-	-	133.5						
		1258.4	1.1	29776	1.4				178.0	246.0	-	-	133.5						
		1151.0	1.2	27235	1.8				178.0	246.0	-	-	133.5						
		1061.8	1.3	25124	2.0				178.0	246.0	-	-	133.5						
		952.6	1.5	22540	2.2				178.0	246.0	-	-	133.5						
		878.7	1.6	20791	2.3				151.3	209.1	-	-	113.5						
		789.4	1.8	18678	2.5				151.3	209.1	-	-	113.5						
	PL 50004	1982.0	1.4	23449	1.7	20.0	14.0	112M/2C	178.0	246.0	-	-	133.5	440	-	382	395	548	536-549
		1672.3	1.7	19785	2.4				151.3	209.1	-	-	113.5						
		1387.4	2.0	16414	2.8				151.3	209.1	-	-	113.5						
		1258.4	2.2	14888	2.4				151.3	209.1	-	-	113.5						
	PL 35004	1289.7	0.7	47470	0.8	17.0	11.9	132M/6B	144.0	204.0	-	-	108.0	335	-	299	307	398	516-529
		1067.3	0.8	39284	1.0				144.0	204.0	-	-	108.0						
		987.0	0.9	36328	1.1				144.0	204.0	-	-	108.0						
		816.8	1.1	30064	1.2				144.0	204.0	-	-	108.0						
		762.5	1.2	28065	1.3				144.0	204.0	-	-	108.0						
		703.4	1.3	25890	1.4				144.0	204.0	-	-	108.0						
		677.7	1.3	24944	1.4				144.0	204.0	-	-	108.0						
		583.5	1.5	21477	1.6				122.4	173.4	-	-	91.8						
		496.0	1.8	18256	2.2				122.4	173.4	-	-	91.8						
		437.1	2.1	16088	2.4				122.4	173.4	-	-	91.8						
		379.6	2.4	13972	2.7				122.4	173.4	-	-	91.8						
		362.7	2.5	13350	2.8				122.4	173.4	-	-	91.8						

P1 (kW)		iges	n2 (rpm)	M2 (Nm)	fs	Pt (20°C) (kW)	Pt (40°C) (kW)	Motor IE2	FR (kN) MC	MS	PC	PS	CPC	~ Kg M…	P…	F	FS	CPC	mm
4.00	PL 35004	1289.7	1.1	30516	1.2	17.0	11.9	112M/4C	144.0	204.0	-	-	108.0	311	-	275	283	374	516-529
		1067.3	1.3	25254	1.4				144.0	204.0	-	-	108.0						
		987.0	1.4	23354	1.5				144.0	204.0	-	-	108.0						
		816.8	1.7	19327	1.8				122.4	173.4	-	-	91.8						
		762.5	1.8	18042	1.9				122.4	173.4	-	-	91.8						
		703.4	2.0	16644	2.0				122.4	173.4	-	-	91.8						
		677.7	2.1	16035	2.0				122.4	173.4	-	-	91.8						
		583.5	2.4	13807	2.3				122.4	173.4	-	-	91.8						
	PL 35004	1289.7	2.2	15258	2.1	17.0	11.9	112M/2C	122.4	173.4	-	-	91.8	308	-	272	280	371	516-529
		1067.3	2.6	12627	2.5				111.6	158.1	-	-	83.7						
		987.0	2.8	11677	2.7				111.6	158.1	-	-	83.7						
	PL 30004	1015.5	0.9	37377	0.8	17.0	11.9	132M/6B	90.0	137.0	-	-	67.5	329	-	288	296	392	496-509
		838.9	1.1	30877	1.2				90.0	137.0	-	-	67.5						
		752.6	1.2	27701	1.3				90.0	137.0	-	-	67.5						
		694.3	1.3	25555	1.4				90.0	137.0	-	-	67.5						
		623.7	1.4	22957	1.5				90.0	137.0	-	-	67.5						
		576.0	1.6	21201	1.6				76.5	116.5	-	-	57.4						
		517.4	1.7	19044	1.7				76.5	116.5	-	-	57.4						
		477.3	1.9	17568	1.8				76.5	116.5	-	-	57.4						
		427.1	2.1	15720	2.0				76.5	116.5	-	-	57.4						
		396.0	2.3	14576	2.1				76.5	116.5	-	-	57.4						
		379.6	2.4	13972	2.2				76.5	116.5	-	-	57.4						
		362.7	2.5	13350	2.3				76.5	116.5	-	-	57.4						
		328.5	2.7	12091	2.5				69.8	106.2	-	-	52.3						
		314.9	2.9	11591	2.6				69.8	106.2	-	-	52.3						
		300.9	3.0	11075	2.7				69.8	106.2	-	-	52.3						
	PL 30004	1425.1	1.0	33720	0.8	17.0	11.9	112M/4C	90.0	137.0	-	-	67.5	305	-	264	272	368	496-509
		1015.5	1.4	24028	1.1				90.0	137.0	-	-	67.5						
		838.9	1.7	19850	1.7				76.5	116.5	-	-	57.4						
		752.6	1.9	17808	1.8				76.5	116.5	-	-	57.4						
		694.3	2.0	16428	1.9				76.5	116.5	-	-	57.4						
		623.7	2.2	14758	2.1				76.5	116.5	-	-	57.4						
		576.0	2.4	13629	2.3				76.5	116.5	-	-	57.4						
		517.4	2.7	12243	2.5				69.8	106.2	-	-	52.3						
		477.3	2.9	11294	2.7				69.8	106.2	-	-	52.3						
		427.1	3.3	10106	2.9				69.8	106.2	-	-	52.3						
	PL 30004	1425.1	2.0	16860	1.5	17.0	11.9	112M/2C	76.5	116.5	-	-	57.4	302	-	261	269	365	496-509
		1015.5	2.8	12014	1.9				69.8	106.2	-	-	52.3						
		838.9	3.3	9925	2.9				69.8	106.2	-	-	52.3						
	PL 25004	1013.4	0.9	37300	0.8	15.0	10.5	132M/6B	90.0	137.0	-	-	67.5	296	-	260	268	357	476-489
		934.9	1.0	34411	0.8				90.0	137.0	-	-	67.5						
		873.6	1.0	32155	0.9				90.0	137.0	-	-	67.5						
		803.1	1.1	29560	0.9				90.0	137.0	-	-	67.5						
		752.3	1.2	27690	1.0				90.0	137.0	-	-	67.5						
		697.5	1.3	25673	1.3				90.0	137.0	-	-	67.5						
		617.8	1.5	22739	1.5				90.0	137.0	-	-	67.5						
		556.9	1.6	20498	1.6				76.5	116.5	-	-	57.4						
		493.2	1.8	18153	1.8				76.5	116.5	-	-	57.4						
		455.5	2.0	16766	1.9				76.5	116.5	-	-	57.4						
		424.3	2.1	15617	2.0				76.5	116.5	-	-	57.4						
		408.4	2.2	15032	2.1				76.5	116.5	-	-	57.4						
		374.0	2.4	13766	2.2				76.5	116.5	-	-	57.4						
		338.8	2.7	12470	2.4				69.8	106.2	-	-	52.3						
	PL 25004	1476.0	0.9	34925	0.8	15.0	10.5	112M/4C	90.0	137.0	-	-	67.5	272	-	236	244	333	476-489
		1272.4	1.1	30107	0.9				90.0	137.0	-	-	67.5						
		1126.9	1.2	26664	1.0				90.0	137.0	-	-	67.5						
		1013.4	1.4	23979	1.1				90.0	137.0	-	-	67.5						
		934.9	1.5	22121	1.2				90.0	137.0	-	-	67.5						
		873.6	1.6	20671	1.2				76.5	116.5	-	-	57.4						
		803.1	1.7	19003	1.3				76.5	116.5	-	-	57.4						
		752.3	1.9	17801	1.4				76.5	116.5	-	-	57.4						
		697.5	2.0	16504	1.9				76.5	116.5	-	-	57.4						
		617.8	2.3	14618	2.1				76.5	116.5	-	-	57.4						
		556.9	2.5	13177	2.3				69.8	106.2	-	-	52.3						
		493.2	2.8	11670	2.6				69.8	106.2	-	-	52.3						
		455.5	3.1	10778	2.8				69.8	106.2	-	-	52.3						
		424.3	3.3	10040	2.9				69.8	106.2	-	-	52.3						
		408.4	3.4	9663	3.0				69.8	106.2	-	-	52.3						

P1 (kW)		iges	n2 (rpm)	M2 (Nm)	fs	Pt (20°C) (kW)	Pt (40°C) (kW)	Motor IE2	FR (kN)					~ Kg					mm
									MC	MS	PC	PS	CPC	M...	P...	F	FS	CPC	
4.00	PL 25004	1774.0	1.6	20988	0.9	15.0	10.5	112M/2C	76.5	116.5	-	-	57.4	269	-	233	241	330	476-489
		1529.3	1.8	18093	1.1				76.5	116.5	-	-	57.4						
		1476.0	1.9	17462	1.4				76.5	116.5	-	-	57.4						
		1354.5	2.1	16025	1.2				76.5	116.5	-	-	57.4						
		1272.4	2.2	15054	1.6				76.5	116.5	-	-	57.4						
		1126.9	2.5	13332	1.8				76.5	116.5	-	-	57.4						
		1013.4	2.8	11989	1.9				69.8	106.2	-	-	52.3						
		934.9	3.0	11061	2.1				69.8	106.2	-	-	52.3						
		873.6	3.2	10335	2.2				69.8	106.2	-	-	52.3						
		803.1	3.5	9501	2.3				69.8	106.2	-	-	52.3						
		752.3	3.7	8900	2.5				65.3	99.3	-	-	48.9						
	PL 18004	720.0	1.3	26501	0.8	13.0	9.1	132M/6B	60.0	106.0	140.0	186.0	45.0	217	244	186	222	267	452-469
		677.9	1.3	24951	0.8				60.0	106.0	140.0	186.0	45.0						
		620.0	1.5	22820	0.9				60.0	106.0	140.0	186.0	45.0						
		549.1	1.6	20211	1.0				51.0	90.1	119.0	158.1	38.3						
		489.2	1.8	18006	1.0				51.0	90.1	119.0	158.1	38.3						
		438.4	2.1	16136	1.2				51.0	90.1	119.0	158.1	38.3						
		377.2	2.4	13884	1.3				51.0	90.1	119.0	158.1	38.3						
		348.6	2.6	12831	1.4				46.5	82.2	108.5	144.2	34.9						
	PL 18004	928.8	1.5	21977	0.8	13.0	9.1	112M/4C	51.0	90.1	119.0	158.1	38.3	193	220	162	198	243	452-469
		849.8	1.6	20108	0.8				51.0	90.1	119.0	158.1	38.3						
		818.8	1.7	19374	1.0				51.0	90.1	119.0	158.1	38.3						
		770.5	1.8	18231	1.0				51.0	90.1	119.0	158.1	38.3						
		720.0	1.9	17036	1.1				51.0	90.1	119.0	158.1	38.3						
		677.9	2.1	16040	1.2				51.0	90.1	119.0	158.1	38.3						
		620.0	2.3	14670	1.2				51.0	90.1	119.0	158.1	38.3						
		549.1	2.5	12993	1.4				46.5	82.2	108.5	144.2	34.9						
		489.2	2.9	11575	1.5				46.5	82.2	108.5	144.2	34.9						
		438.4	3.2	10373	1.7				46.5	82.2	108.5	144.2	34.9						
		377.2	3.7	8925	1.9				43.5	76.9	101.5	134.9	32.6						
		348.6	4.0	8248	2.0				43.5	76.9	101.5	134.9	32.6						
	PL 18004	1216.4	2.3	14391	1.1	13.0	9.1	112M/2C	51.0	90.1	119.0	158.1	38.3	190	217	159	195	240	452-469
		1113.0	2.5	13168	1.2				46.5	82.2	108.5	144.2	34.9						
		987.4	2.8	11682	1.3				46.5	82.2	108.5	144.2	34.9						
		928.8	3.0	10988	1.4				46.5	82.2	108.5	144.2	34.9						
		849.8	3.3	10054	1.5				46.5	82.2	108.5	144.2	34.9						
		818.8	3.4	9687	1.7				46.5	82.2	108.5	144.2	34.9						
		770.5	3.6	9116	1.8				43.5	76.9	101.5	134.9	32.6						
		720.0	3.9	8518	1.9				43.5	76.9	101.5	134.9	32.6						
		677.9	4.1	8020	2.1				43.5	76.9	101.5	134.9	32.6						
		620.0	4.5	7335	2.2				40.5	71.6	94.5	125.6	30.4						
		549.1	5.1	6496	2.4				40.5	71.6	94.5	125.6	30.4						
		489.2	5.7	5788	2.7				36.0	63.6	84.0	111.6	27.0						
		438.4	6.4	5187	2.9				36.0	63.6	84.0	111.6	27.0						
	PL 16004	612.0	1.5	22526	0.8	11.0	7.7	132M/6B	60.0	106.0	140.0	186.0	45.0	203	230	172	208	253	428-445
		554.4	1.6	20406	1.0				51.0	90.1	119.0	158.1	38.3						
		531.4	1.7	19559	0.9				51.0	90.1	119.0	158.1	38.3						
		507.7	1.8	18687	1.0				51.0	90.1	119.0	158.1	38.3						
		459.9	2.0	16928	1.1				51.0	90.1	119.0	158.1	38.3						
		440.9	2.0	16228	1.0				51.0	90.1	119.0	158.1	38.3						
		421.2	2.1	15503	1.2				51.0	90.1	119.0	158.1	38.3						
		388.6	2.3	14303	1.3				51.0	90.1	119.0	158.1	38.3						
		352.0	2.6	12956	1.4				46.5	82.2	108.5	144.2	34.9						
	PL 16004	640.5	2.2	15155	1.1	11.0	7.7	112M/4C	51.0	90.1	119.0	158.1	38.3	179	206	148	184	229	428-445
		612.0	2.3	14481	1.1				51.0	90.1	119.0	158.1	38.3						
		576.1	2.4	13631	0.9				51.0	90.1	119.0	158.1	38.3						
		554.4	2.5	13118	1.4				46.5	82.2	108.5	144.2	34.9						
		531.4	2.6	12574	1.2				46.5	82.2	108.5	144.2	34.9						
		507.7	2.8	12013	1.5				46.5	82.2	108.5	144.2	34.9						
		459.9	3.0	10882	1.6				46.5	82.2	108.5	144.2	34.9						
		440.9	3.2	10432	1.4				46.5	82.2	108.5	144.2	34.9						
		421.2	3.3	9966	1.7				46.5	82.2	108.5	144.2	34.9						
		388.6	3.6	9195	1.8				43.5	76.9	101.5	134.9	32.6						
		352.0	4.0	8329	2.0				43.5	76.9	101.5	134.9	32.6						

P1 (kW)		iges	n2 (rpm)	M2 (Nm)	fs	Pt (20°C) (kW)	Pt (40°C) (kW)	Motor IE2	FR (kN)					~ Kg					mm
									MC	MS	PC	PS	CPC	M...	P...	F	FS	CPC	
4.00	PL 16004	1270.1	2.2	15026	0.8	11.0	7.7	112M/2C	51.0	90.1	119.0	158.1	38.3	176	203	145	181	226	428-445
		1093.7	2.6	12939	0.9				46.5	82.2	108.5	144.2	34.9						
		1008.9	2.8	11936	1.3				46.5	82.2	108.5	144.2	34.9						
		907.3	3.1	10734	1.1				46.5	82.2	108.5	144.2	34.9						
		806.4	3.5	9540	1.2				46.5	82.2	108.5	144.2	34.9						
		724.4	3.9	8570	1.3				43.5	76.9	101.5	134.9	32.6						
		640.5	4.4	7578	1.9				43.5	76.9	101.5	134.9	32.6						
		612.0	4.6	7240	1.9				40.5	71.6	94.5	125.6	30.4						
		576.1	4.9	6816	1.6				40.5	71.6	94.5	125.6	30.4						
		554.4	5.1	6559	2.4				40.5	71.6	94.5	125.6	30.4						
		531.4	5.3	6287	2.2				40.5	71.6	94.5	125.6	30.4						
		507.7	5.5	6007	2.6				36.0	63.6	84.0	111.6	27.0						
		459.9	6.1	5441	2.8				36.0	63.6	84.0	111.6	27.0						
		440.9	6.4	5216	2.6				36.0	63.6	84.0	111.6	27.0						
		421.2	6.6	4983	3.0				34.5	61.0	80.5	107.0	25.9						
	PL 10004	421.2	2.1	15503	0.8	11.0	7.7	132M/6B	55.3	80.8	-	-	41.4	195	-	162	200	245	410-421
		388.6	2.3	14303	0.9				55.3	80.8	-	-	41.4						
		352.0	2.6	12956	0.9				50.4	73.6	-	-	37.8						
	PL 10004	554.4	2.5	13118	0.9	11.0	7.7	112M/4C	50.4	73.6	-	-	37.8	171	-	138	176	221	410-421
		531.4	2.6	12574	0.8				50.4	73.6	-	-	37.8						
		507.7	2.8	12013	1.0				50.4	73.6	-	-	37.8						
		459.9	3.0	10882	1.1				50.4	73.6	-	-	37.8						
		440.9	3.2	10432	1.0				50.4	73.6	-	-	37.8						
		421.2	3.3	9966	1.2				50.4	73.6	-	-	37.8						
		388.6	3.6	9195	1.2				47.1	68.9	-	-	35.3						
		352.0	4.0	8329	1.3				47.1	68.9	-	-	35.3						
	PL 10004	1008.9	2.8	11936	0.9	11.0	7.7	112M/2C	50.4	73.6	-	-	37.8	168	-	135	173	218	410-421
		806.4	3.5	9540	0.8				50.4	73.6	-	-	37.8						
		724.4	3.9	8570	0.9				47.1	68.9	-	-	35.3						
		640.5	4.4	7578	1.2				47.1	68.9	-	-	35.3						
		612.0	4.6	7240	1.3				43.9	64.1	-	-	32.9						
		576.1	4.9	6816	1.1				43.9	64.1	-	-	32.9						
		554.4	5.1	6559	1.6				43.9	64.1	-	-	32.9						
		531.4	5.3	6287	1.5				43.9	64.1	-	-	32.9						
		507.7	5.5	6007	1.8				39.0	57.0	-	-	29.3						
		459.9	6.1	5441	1.9				39.0	57.0	-	-	29.3						
		440.9	6.4	5216	1.7				39.0	57.0	-	-	29.3						
		421.2	6.6	4983	2.1				37.4	54.6	-	-	28.0						
		388.6	7.2	4597	2.2				37.4	54.6	-	-	28.0						
		352.0	8.0	4164	2.4				35.8	52.3	-	-	26.8						
	PL 7004	347.9	4.0	8232	0.8	8.0	5.6	112M/4C	-	-	83.4	100.1	62.5	-	134	116	137	151	392-400
		332.4	4.2	7865	0.8				-	-	83.4	100.1	62.5						
		301.1	4.6	7125	0.9				-	-	77.6	93.2	58.2						
	PL 7004	632.4	4.4	7482	0.8	8.0	5.6	112M/2C	-	-	83.4	100.1	62.5	-	131	113	134	148	392-400
		571.7	4.9	6764	0.9				-	-	77.6	93.2	58.2						
		523.6	5.3	6195	1.0				-	-	77.6	93.2	58.2						
		474.3	5.9	5611	1.1				-	-	69.0	82.8	51.8						
		434.4	6.4	5139	1.2				-	-	69.0	82.8	51.8						
		400.7	7.0	4741	1.2				-	-	66.1	79.4	49.6						
		347.9	8.0	4116	1.4				-	-	63.3	75.9	47.4						
		332.4	8.4	3933	1.4				-	-	63.3	75.9	47.4						
		301.1	9.3	3562	1.6				-	-	60.4	72.5	45.3						
	PL 5004	468.4	6.0	5542	0.8	6.0	4.2	112M/2C	21.0	27.0	37.8	43.8	28.4	93	102	84	95	106	370-385
		424.3	6.6	5020	0.8				20.1	25.9	36.2	42.0	27.2						
		413.9	6.8	4897	0.9				20.1	25.9	36.2	42.0	27.2						
		388.6	7.2	4597	0.9				20.1	25.9	36.2	42.0	27.2						
		352.0	8.0	4164	0.9				19.3	24.8	34.7	40.2	26.0						
	PL 25003	317.2	2.8	12099	1.5	20.0	14.0	132M/6B	69.8	106.2	-	-	52.3	290	-	254	262	351	476-489
		262.8	3.4	10024	1.7				69.8	106.2	-	-	52.3						
		226.6	4.0	8643	1.9				65.3	99.3	-	-	48.9						
		218.7	4.1	8342	2.6				65.3	99.3	-	-	48.9						
		188.5	4.8	7190	2.9				60.8	92.5	-	-	45.6						
	PL 25003	317.2	4.4	7778	2.1	20.0	14.0	112M/4C	65.3	99.3	-	-	48.9	266	-	230	238	327	476-489
		262.8	5.3	6444	2.5				60.8	92.5	-	-	45.6						
		226.6	6.2	5556	2.8				54.0	82.2	-	-	40.5						
	PL 18003	180.2	5.0	6873	2.0	17.0	11.9	132M/6B	40.5	71.6	94.5	125.6	30.4	210	237	179	215	260	452-469
		149.1	6.0	5687	2.4				36.0	63.6	84.0	111.6	27.0						
		128.4	7.0	4897	2.7				34.5	61.0	80.5	107.0	25.9						
	PL 18003	180.2	7.8	4418	2.9	17.0	11.9	112M/4C	33.0	58.3	77.0	102.3	24.8	186	213	155	191	236	452-469

P1 (kW)		iges	n2 (rpm)	M2 (Nm)	fs	Pt (20°C) (kW)	Pt (40°C) (kW)	Motor IE2	FR (kN)					~ Kg					mm
									MC	MS	PC	PS	CPC	M...	P...	F	FS	CPC	
4.00	PL 16003	274.1	3.3	10455	1.1	15.0	10.5	132M/6B	46.5	82.2	108.5	144.2	34.9	197	224	165	202	247	428-445
		235.4	3.8	8979	0.9				43.5	76.9	101.5	134.9	32.6						
		226.8	4.0	8651	1.3				43.5	76.9	101.5	134.9	32.6						
		209.7	4.3	7998	1.0				43.5	76.9	101.5	134.9	32.6						
		195.3	4.6	7449	1.4				40.5	71.6	94.5	125.6	30.4						
		188.2	4.8	7178	1.5				40.5	71.6	94.5	125.6	30.4						
		155.9	5.8	5946	1.8				36.0	63.6	84.0	111.6	27.0						
		144.0	6.3	5492	1.9				36.0	63.6	84.0	111.6	27.0						
		129.4	7.0	4936	2.0				34.5	61.0	80.5	107.0	25.9						
		124.0	7.3	4730	2.8				34.5	61.0	80.5	107.0	25.9						
		118.5	7.6	4520	2.2				33.0	58.3	77.0	102.3	24.8						
	PL 16003	330.3	4.2	8099	1.0	15.0	10.5	112M/4C	43.5	76.9	101.5	134.9	32.6	173	200	141	178	223	428-445
		274.1	5.1	6721	1.6				40.5	71.6	94.5	125.6	30.4						
		235.4	5.9	5772	1.4				36.0	63.6	84.0	111.6	27.0						
		226.8	6.2	5561	1.8				36.0	63.6	84.0	111.6	27.0						
		209.7	6.7	5142	1.5				34.5	61.0	80.5	107.0	25.9						
		195.3	7.2	4789	2.1				34.5	61.0	80.5	107.0	25.9						
		188.2	7.4	4615	2.2				34.5	61.0	80.5	107.0	25.9						
		155.9	9.0	3823	2.5				31.5	55.7	73.5	97.7	23.6						
		144.0	9.7	3531	2.7				30.0	53.0	70.0	93.0	22.5						
		129.4	10.8	3173	3.0				30.0	53.0	70.0	93.0	22.5						
	PL 16003	209.7	8.5	4049	1.8	15.0	10.5	112M/2C	33.0	58.3	77.0	102.3	24.8	170	197	138	175	220	428-445
		235.4	10.2	3360	2.8				30.0	53.0	70.0	93.0	22.5						
		274.1	11.9	2886	2.4				30.0	53.0	70.0	93.0	22.5						
		330.3	13.4	2571	2.7				28.2	49.8	65.8	87.4	21.2						
	PL 10003	226.8	4.0	8651	0.9	15.0	10.5	132M/6B	47.1	68.9	-	-	35.3	189	-	156	194	239	410-421
		195.3	4.6	7449	1.0				43.9	64.1	-	-	32.9						
		188.2	4.8	7178	1.0				43.9	64.1	-	-	32.9						
		173.6	5.2	6621	1.4				43.9	64.1	-	-	32.9						
		155.9	5.8	5946	1.2				39.0	57.0	-	-	29.3						
		144.0	6.3	5492	1.6				39.0	57.0	-	-	29.3						
		129.4	7.0	4936	1.4				37.4	54.6	-	-	28.0						
		124.0	7.3	4730	1.8				37.4	54.6	-	-	28.0						
		118.5	7.6	4520	1.5				35.8	52.3	-	-	26.8						
		109.3	8.2	4169	2.0				35.8	52.3	-	-	26.8						
		94.9	9.5	3620	2.3				34.1	49.9	-	-	25.6						
		82.1	11.0	3131	3.0				32.5	47.5	-	-	24.4						
	PL 10003	274.1	5.1	6721	1.1	15.0	10.5	112M/4C	43.9	64.1	-	-	32.9	165	-	132	170	215	410-421
		235.4	5.9	5772	0.9				39.0	57.0	-	-	29.3						
		226.8	6.2	5561	1.2				39.0	57.0	-	-	29.3						
		209.7	6.7	5142	1.0				37.4	54.6	-	-	28.0						
		195.3	7.2	4789	1.4				37.4	54.6	-	-	28.0						
		188.2	7.4	4615	1.5				37.4	54.6	-	-	28.0						
		173.6	8.1	4257	2.0				35.8	52.3	-	-	26.8						
		155.9	9.0	3823	1.7				34.1	49.9	-	-	25.6						
		144.0	9.7	3531	2.4				32.5	47.5	-	-	24.4						
		129.4	10.8	3173	2.0				32.5	47.5	-	-	24.4						
		124.0	11.3	3040	2.7				32.5	47.5	-	-	24.4						
		118.5	11.8	2906	2.1				32.5	47.5	-	-	24.4						
		109.3	12.8	2680	3.0				31.5	46.1	-	-	23.6						
	PL 10003	330.3	8.5	4049	1.2	15.0	10.5	112M/2C	35.8	52.3	-	-	26.8	162	-	129	167	212	410-421
		274.1	10.2	3360	1.9				32.5	47.5	-	-	24.4						
		235.4	11.9	2886	1.7				32.5	47.5	-	-	24.4						
		226.8	12.3	2781	2.2				32.5	47.5	-	-	24.4						
		209.7	13.4	2571	1.8				30.6	44.7	-	-	22.9						
		195.3	14.3	2394	2.5				30.6	44.7	-	-	22.9						
		188.2	14.9	2307	2.6				30.6	44.7	-	-	22.9						
		155.9	18.0	1911	3.0				27.0	39.4	-	-	20.2						
	PL 7003	244.7	5.7	6000	0.8	14.0	9.8	112M/4C	-	-	69.0	82.8	51.8	-	128	110	131	145	392-400
		216.7	6.5	5313	1.0				-	-	69.0	82.8	51.8						
		194.9	7.2	4779	0.8				-	-	66.1	79.4	49.6						
		174.4	8.0	4276	1.1				-	-	63.3	75.9	47.4						
		155.4	9.0	3810	1.2				-	-	60.4	72.5	45.3						
		148.8	9.4	3649	1.4				-	-	60.4	72.5	45.3						
		139.2	10.1	3413	1.3				-	-	57.5	69.0	43.1						
		127.9	10.9	3136	1.7				-	-	57.5	69.0	43.1						
		112.9	12.4	2768	1.8				-	-	55.8	66.9	41.8						
		102.1	13.7	2503	2.1				-	-	55.8	66.9	41.8						
		93.7	14.9	2298	2.1				-	-	54.1	64.9	40.5						
		88.4	15.8	2168	1.9				-	-	54.1	64.9	40.5						
		78.3	17.9	1920	2.4				-	-	51.2	61.4	38.4						
		71.7	19.5	1758	2.5				-	-	47.7	57.3	35.8						
		64.8	21.6	1589	3.0				-	-	47.7	57.3	35.8						

P1 (kW)		iges	n2 (rpm)	M2 (Nm)	fs	Pt (20°C) (kW)	Pt (40°C) (kW)	Motor IE2	FR (kN)					~ Kg					mm
									MC	MS	PC	PS	CPC	M...	P...	F	FS	CPC	
4.00	PL 7003	155.4	5.8	5927	0.8	14.0	9.8	132M/6B	-	-	69.0	82.8	51.8	-	152	134	155	169	392-400
		148.8	6.0	5676	1.0				-	-	69.0	82.8	51.8						
		139.2	6.5	5309	0.9				-	-	69.0	82.8	51.8						
		127.9	7.0	4878	1.2				-	-	66.1	79.4	49.6						
		112.9	8.0	4306	1.2				-	-	63.3	75.9	47.4						
		102.1	8.8	3894	1.4				-	-	60.4	72.5	45.3						
		93.7	9.6	3574	1.4				-	-	57.5	69.0	43.1						
		88.4	10.2	3372	1.3				-	-	57.5	69.0	43.1						
		78.3	11.5	2987	1.7				-	-	57.5	69.0	43.1						
		71.7	12.6	2735	1.8				-	-	54.1	64.9	40.5						
		64.8	13.9	2472	2.1				-	-	54.1	64.9	40.5						
		53.8	16.7	2052	2.5				-	-	54.1	64.9	40.5						
	PL 7003	283.8	9.9	3479	1.1	14.0	9.8	112M/2C	-	-	57.5	69.0	43.1	-	125	107	128	142	392-400
		244.7	11.4	3000	1.4				-	-	57.5	69.0	43.1						
		216.7	12.9	2657	1.8				-	-	54.1	64.9	40.5						
		194.9	14.4	2389	1.5				-	-	54.1	64.9	40.5						
		174.4	16.1	2138	1.9				-	-	54.1	64.9	40.5						
		155.4	18.0	1905	2.1				-	-	47.7	57.3	35.8						
		148.8	18.8	1824	2.5				-	-	47.7	57.3	35.8						
		139.2	20.1	1707	2.3				-	-	47.7	57.3	35.8						
	PL 5003	129.4	7.0	4936	0.8	10.0	7.0	132M/6B	20.1	25.9	36.2	42.0	27.2	114	123	105	116	127	370-385
		119.3	7.5	4550	0.8				19.3	24.8	34.7	40.2	26.0						
		99.0	9.1	3776	1.0				18.4	23.6	33.1	38.3	24.8						
		90.7	9.9	3459	1.2				17.5	22.5	31.5	36.5	23.6						
		82.1	11.0	3131	1.2				17.5	22.5	31.5	36.5	23.6						
		75.2	12.0	2868	1.4				17.5	22.5	31.5	36.5	23.6						
		62.9	14.3	2399	1.4				16.5	21.2	29.6	34.3	22.2						
		57.6	15.6	2197	1.7				16.5	21.2	29.6	34.3	22.2						
		52.1	17.3	1987	1.7				16.5	21.2	29.6	34.3	22.2						
	PL 5003	162.0	8.6	3972	0.8	10.0	7.0	112M/4C	18.4	23.6	33.1	38.3	24.8	90	99	81	92	103	370-385
		155.9	9.0	3823	1.0				18.4	23.6	33.1	38.3	24.8						
		149.5	9.4	3666	0.8				18.4	23.6	33.1	38.3	24.8						
		129.4	10.8	3173	1.1				17.5	22.5	31.5	36.5	23.6						
		119.3	11.7	2925	1.2				17.5	22.5	31.5	36.5	23.6						
		99.0	14.1	2427	1.4				16.5	21.2	29.6	34.3	22.2						
		90.7	15.4	2224	1.7				16.5	21.2	29.6	34.3	22.2						
		82.1	17.1	2013	1.7				15.6	20.0	28.0	32.5	21.0						
		75.2	18.6	1844	2.0				15.6	20.0	28.0	32.5	21.0						
		62.9	22.3	1542	2.1				14.0	18.0	25.2	29.2	18.9						
		57.6	24.3	1412	2.4				13.7	17.6	24.6	28.5	18.4						
		52.1	26.9	1277	2.4				13.3	17.1	23.9	27.7	18.0						
	PL 5003	302.2	9.3	3705	0.8	10.0	7.0	112M/2C	18.4	23.6	33.1	38.3	24.8	87	96	78	89	100	370-385
		273.4	10.2	3352	0.8				17.5	22.5	31.5	36.5	23.6						
		235.4	11.9	2886	1.0				17.5	22.5	31.5	36.5	23.6						
		195.3	14.3	2394	1.2				16.5	21.2	29.6	34.3	22.2						
		173.6	16.1	2128	1.1				16.5	21.2	29.6	34.3	22.2						
		162.0	17.3	1986	1.4				16.5	21.2	29.6	34.3	22.2						
		155.9	18.0	1911	1.7				14.5	18.7	26.1	30.3	19.6						
		149.5	18.7	1833	1.5				14.5	18.7	26.1	30.3	19.6						
		129.4	21.6	1586	2.0				14.5	18.7	26.1	30.3	19.6						
		119.3	23.5	1463	2.2				13.7	17.6	24.6	28.5	18.4						
		99.0	28.3	1214	2.5				13.0	16.7	23.3	27.0	17.5						
		90.7	30.9	1112	3.0				13.0	16.7	23.3	27.0	17.5						
		82.1	34.1	1007	3.0				12.3	15.8	22.1	25.6	16.5						
	PL 2503	90.7	9.9	3459	0.8	8.0	5.6	132M/6B	16.5	22.5	31.5	36.5	23.6	108	117	99	110	121	348-363
		82.1	11.0	3131	0.8				16.5	22.5	31.5	36.5	23.6						
		75.2	12.0	2868	0.9				16.5	22.5	31.5	36.5	23.6						
		62.9	14.3	2399	1.0				17.5	21.2	29.6	34.3	22.2						
		57.6	15.6	2197	1.2				17.5	21.2	29.6	34.3	22.2						
		52.1	17.3	1987	1.2				17.5	21.2	29.6	34.3	22.2						
	PL 2503	129.4	10.8	3173	0.8	8.0	5.6	112M/4C	17.5	22.5	31.5	36.5	23.6	84	93	75	86	97	348-363
		119.3	11.7	2925	0.8				17.5	22.5	31.5	36.5	23.6						
		99.0	14.1	2427	1.0				16.5	21.2	29.6	34.3	22.2						
		90.7	15.4	2224	1.2				16.5	21.2	29.6	34.3	22.2						
		82.1	17.1	2013	1.1				15.6	20.0	28.0	32.5	21.0						
		75.2	18.6	1844	1.4				15.6	20.0	28.0	32.5	21.0						
		62.9	22.3	1542	1.4				14.0	18.0	25.2	29.2	18.9						
		57.6	24.3	1412	1.7				13.7	17.6	24.6	28.5	18.4						
		52.1	26.9	1277	1.7				13.3	17.1	23.9	27.7	18.0						

P1 (kW)		iges	n2 (rpm)	M2 (Nm)	fs	Pt (20°C) (kW)	Pt (40°C) (kW)	Motor IE2	FR (kN)					~ Kg					mm
									MC	MS	PC	PS	CPC	M...	P...	F	FS	CPC	
4.00	PL 2503	195.3	14.3	2394	0.8	8.0	5.6	112M/2C	16.5	21.2	29.6	34.3	22.2	81	90	72	83	94	348-363
		173.6	16.1	2128	0.8				16.5	21.2	29.6	34.3	22.2						
		162.0	17.3	1986	1.0				16.5	21.2	29.6	34.3	22.2						
		155.9	18.0	1911	1.2				14.5	18.7	26.1	30.3	19.6						
		149.5	18.7	1833	1.0				14.5	18.7	26.1	30.3	19.6						
		129.4	21.6	1586	1.4				14.5	18.7	26.1	30.3	19.6						
		119.3	23.5	1463	1.5				13.7	17.6	24.6	28.5	18.4						
		99.0	28.3	1214	1.7				13.0	16.7	23.3	27.0	17.5						
		90.7	30.9	1112	2.1				13.0	16.7	23.3	27.0	17.5						
		82.1	34.1	1007	2.0				12.3	15.8	22.1	25.6	16.5						
		75.2	37.2	922	2.4				12.3	15.8	22.1	25.6	16.5						
		62.9	44.5	771	2.5				11.4	14.6	20.5	23.7	15.4						
		57.6	48.6	706	3.0				11.2	14.4	20.2	23.4	15.1						
		52.1	53.7	639	2.9				10.9	14.0	19.5	22.6	14.6						
	PL 1603	111.5	25.1	1367	0.8	5.0	3.5	112M/2C	4.3	5.3	9.4	11.7	7.0	67	69	65	68	72	326-340
		102.9	27.2	1262	0.9				4.3	5.3	9.4	11.7	7.0						
		85.3	32.8	1046	1.1				3.9	4.7	8.4	10.5	6.3						
		78.7	35.6	965	1.1				3.9	4.7	8.4	10.5	6.3						
		70.8	39.5	868	1.2				3.7	4.5	8.0	10.1	6.0						
		65.3	42.9	801	1.3				3.6	4.4	7.8	9.8	5.9						
		54.2	51.7	664	1.5				3.5	4.3	7.7	9.6	5.8						
	PL 1603	54.2	25.8	1329	0.9	5.0	3.5	112M/4C	4.3	5.3	9.4	11.7	7.0	70	72	68	71	75	326-340
	PL 1003	70.8	39.5	868	0.8	5.0	3.5	112M/2C	3.7	4.5	8.0	10.1	6.0	65	67	63	66	70	304-318
		65.3	42.9	801	0.8				3.6	4.4	7.8	9.8	5.9						
		54.2	51.7	664	1.0				3.5	4.3	7.7	9.6	5.8						
	PL 10002	40.5	18.4	1933	2.3	23.0	16.1	132M/6B	27.0	39.4	-	-	20.2	181	-	148	186	231	410-421
		48.9	22.2	1601	2.7				27.0	39.4	-	-	20.2						
	PL 7002	50.8	17.7	2008	1.4	18.0	12.6	132M/6B	-	-	47.7	57.3	35.8	-	146	128	149	162	392-400
		42.1	21.4	1664	2.0				-	-	47.7	57.3	35.8						
		36.3	24.8	1435	2.6				-	-	44.9	53.8	33.6						
	PL 7002	50.8	27.6	1291	2.0	18.0	12.6	112M/4C	-	-	43.7	52.4	32.8	-	122	104	125	138	392-400
		42.1	33.3	1070	2.9				-	-	41.4	49.7	31.1						
	PL 5002	48.9	18.4	1933	1.0	15.0	10.5	132M/6B	14.5	18.7	26.1	30.3	19.6	108	117	99	110	121	370-385
		40.5	22.2	1601	1.4				14.5	18.7	26.1	30.3	19.6						
		34.9	25.8	1379	1.8				13.7	17.6	24.6	28.5	18.4						
		28.9	31.1	1142	2.2				13.0	16.7	23.3	27.0	17.5						
	PL 5002	48.9	28.6	1243	1.4	15.0	10.5	112M/4C	13.3	17.1	23.9	27.7	18.0	84	93	75	86	97	370-385
		40.5	34.6	1029	2.1				12.3	15.8	22.1	25.6	16.5						
		34.9	40.1	887	2.7				11.7	15.1	21.1	24.5	15.8						
	PL 5002	48.9	57.3	621	2.4	15.0	10.5	112M/2C	10.9	14.0	19.5	22.6	14.6	81	90	72	83	94	370-385
	PL 2502	40.5	22.2	1601	1.0	12.0	8.4	132M/6B	14.5	18.7	26.1	30.3	19.6	102	111	94	104	115	348-363
		34.9	25.8	1379	1.3				13.7	17.6	24.6	28.5	18.4						
		28.9	31.1	1142	1.5				13.0	16.7	23.3	27.0	17.5						
		23.1	39.0	913	2.2				11.7	15.1	21.1	24.5	15.8						
		18.4	48.9	727	2.2				11.2	14.4	20.2	23.4	15.1						
	PL 2502	48.9	28.6	1243	0.9	12.0	8.4	112M/4C	13.3	17.1	23.9	27.7	18.0	78	87	70	80	91	348-363
		40.5	34.6	1029	1.4				12.3	15.8	22.1	25.6	16.5						
		34.9	40.1	887	1.9				11.7	15.1	21.1	24.5	15.8						
		28.9	48.4	734	2.2				11.2	14.4	20.2	23.4	15.1						
	PL 2502	62.8	44.6	798	1.3	12.0	8.4	112M/2C	11.4	14.6	20.5	23.7	15.4	75	84	67	77	88	348-363
		48.9	57.3	621	1.6				10.9	14.0	19.5	22.6	14.6						
		40.5	69.1	515	2.4				10.0	12.8	18.0	20.8	13.5						
	PL 1602	28.9	31.1	1142	1.0	8.0	5.6	132M/6B	4.1	5.0	8.9	11.1	6.7	88	90	86	89	93	326-340
		24.0	37.5	949	1.1				3.9	4.7	8.4	10.5	6.3						
		19.9	45.2	787	1.3				3.6	4.4	7.8	9.8	5.9						
		15.2	59.2	601	1.6				3.2	4.0	7.1	8.9	5.3						
		12.6	71.4	498	1.9				3.1	3.8	6.8	8.6	5.1						
	PL 1602	37.8	37.0	960	0.8	8.0	5.6	112M/4C	3.8	4.6	8.2	10.3	6.2	64	66	62	65	69	326-340
		31.4	44.6	798	0.9				3.6	4.4	7.8	9.8	5.9						
		28.9	48.4	734	1.4				3.5	4.3	7.7	9.6	5.8						
		24.0	58.3	610	1.6				3.2	4.0	7.1	8.9	5.3						
		19.9	70.4	506	1.9				3.1	3.8	6.8	8.6	5.1						
		15.2	92.1	386	2.4				2.9	3.5	6.2	7.8	4.7						
		12.6	111.1	320	2.8				2.7	3.3	5.9	7.4	4.5						
	PL 1602	58.5	47.9	743	0.8	8.0	5.6	112M/2C	3.5	4.3	7.7	9.6	5.8	61	63	59	62	66	326-340
		45.6	61.4	579	1.0				3.2	4.0	7.1	8.9	5.3						
		37.8	74.1	480	1.4				3.1	3.8	6.7	8.4	5.0						
		31.4	89.2	399	1.6				2.9	3.5	6.2	7.8	4.7						
		28.9	96.9	367	2.5				2.8	3.5	6.2	7.7	4.6						
		24.0	116.7	305	2.9				2.7	3.3	5.8	7.3	4.4						

P1 (kW)		iges	n2 (rpm)	M2 (Nm)	fs	Pt (20°C) (kW)	Pt (40°C) (kW)	Motor IE2	FR (kN) MC	MS	PC	PS	CPC	~ Kg M…	P…	F	FS	CPC	mm
4.00	PL 1002	19.9 15.2 12.6	45.2 59.2 71.4	787 601 498	0.8 1.1 1.2	8.0	5.6	132M/6B	3.6 3.2 3.1	4.4 4.0 3.8	7.8 7.1 6.8	9.8 8.9 8.6	5.9 5.3 5.1	86	88	84	87	91	304-318
	PL 1002	28.9 24.0 19.9 15.2 12.6	48.4 58.3 70.4 92.1 111.1	734 610 506 386 320	0.9 1.0 1.2 1.5 1.8	8.0	5.6	112M/4C	3.5 3.2 3.1 2.9 2.7	4.3 4.0 3.8 3.5 3.3	7.7 7.1 6.8 6.2 5.9	9.6 8.9 8.6 7.8 7.4	5.8 5.3 5.1 4.7 4.5	62	64	60	63	67	304-318
	PL 1002	37.8 31.4 28.9 24.0 19.9 15.2	74.1 89.2 96.9 116.7 140.7 184.2	480 399 367 305 253 193	0.9 1.1 1.6 1.9 2.1 2.7	8.0	5.6	112M/2C	3.1 2.9 2.8 2.7 2.5 2.3	3.8 3.5 3.5 3.3 3.1 2.9	6.7 6.2 6.2 5.8 5.5 5.1	8.4 7.8 7.7 7.3 6.9 6.4	5.0 4.7 4.6 4.4 4.1 3.8	59	61	57	60	64	304-318
	PL 2501	7.25	124.1	297	2.9	20.0	14.0	132M/6B	8.5	10.9	15.3	17.7	11.5	96	105	87	98	109	348-363
	PL 1601	6.75 5.60	133.3 160.7	276 229	1.8 2.5	12.0	8.4	132M/6B	2.5 2.4	3.1 3.0	5.5 5.3	6.9 6.7	4.1 4.0	82	84	80	83	87	326-340
	PL 1601	6.75	207.4	178	2.6	12.0	8.4	112M/4C	2.3	2.8	4.9	6.2	3.7	58	60	56	59	63	326-340
	PL 1001	6.75 5.60 4.29	133.3 160.7 209.8	276 229 176	1.3 1.7 2.9	12.0	8.4	132M/6B	2.5 2.4 2.3	3.1 3.0 2.8	5.5 5.3 5.0	6.9 6.7 6.2	4.1 4.0 3.7	80	82	78	81	85	304-318
	PL 1001	8.67 6.75 5.60	161.5 207.4 250.0	228 178 147	1.0 1.8 2.5	12.0	8.4	112M/4C	2.4 2.3 2.1	3.0 2.8 2.6	5.3 4.9 4.7	6.7 6.2 5.9	4.0 3.7 3.5	56	58	54	57	61	304-318
	PL 1001	8.67	323.0	114	1.7	12.0	8.4	112M/2C	2.0	2.5	4.4	5.5	3.3	53	55	51	54	58	304-318
5.50	PL 90004	1623.2 1345.0 1119.0 926.1 854.4 798.3 742.1 687.5 585.4	0.6 0.7 0.8 1.0 1.1 1.1 1.2 1.3 1.5	82149 68070 56632 46870 43241 40402 37557 34794 29627	1.3 1.5 1.7 2.0 2.1 2.2 2.4 2.5 2.9	30.0	21.0	132M/6C	310.0 310.0 310.0 310.0 310.0 310.0 310.0 310.0 263.5	432.0 432.0 432.0 432.0 432.0 432.0 432.0 432.0 367.2	- - - - - - - - -	- - - - - - - - -	232.5 232.5 232.5 232.5 232.5 232.5 232.5 232.5 197.6	750	-	654	676	924	576-585
	PL 90004	1623.2 1345.0 1119.0 926.1	0.9 1.0 1.3 1.5	52810 43759 36406 30130	1.8 2.1 2.4 2.9	30.0	21.0	132M/4B	310.0 310.0 310.0 263.5	432.0 432.0 432.0 367.2	- - - -	- - - -	232.5 232.5 232.5 197.6	748	-	652	674	922	576-585
	PL 65004	1008.1 838.8 694.2 640.4 556.2 515.3	0.9 1.1 1.3 1.4 1.6 1.7	51020 42451 35133 32410 28149 26079	1.6 1.9 2.2 2.4 2.7 2.8	25.0	17.5	132M/6C	156.0 156.0 156.0 156.0 132.6 132.6	216.0 216.0 216.0 216.0 183.6 183.6	- - - - - -	- - - - - -	117.0 117.0 117.0 117.0 99.5 99.5	562	-	504	518	670	556-569
	PL 65004	1008.1 838.8	1.4 1.7	32798 27290	2.3 2.7	25.0	17.5	132M/4B	156.0 132.6	216.0 183.6	- -	- -	117.0 99.5	560	-	502	516	668	556-569
	PL 50004	1387.4 1151.0 1061.8 952.6 878.7 789.4 686.4 616.6 591.0 564.7 511.6 471.9 432.2	0.6 0.8 0.8 0.9 1.0 1.1 1.3 1.5 1.5 1.6 1.8 1.9 2.1	70216 58252 53737 48211 44471 39951 34738 31206 29910 28579 25892 23883 21873	0.8 0.9 1.0 1.1 1.2 1.3 2.0 2.1 2.2 2.3 2.5 2.6 2.8	20.0	14.0	132M/6C	178.0 178.0 178.0 178.0 178.0 178.0 178.0 178.0 151.3 151.3 151.3 151.3 151.3	246.0 246.0 246.0 246.0 246.0 246.0 246.0 246.0 209.1 209.1 209.1 209.1 209.1	- - - - - - - - - - - - -	- - - - - - - - - - - - -	133.5 133.5 133.5 133.5 133.5 133.5 133.5 133.5 113.5 113.5 113.5 113.5 113.5	470	-	412	425	578	536-549
	PL 50004	1672.3 1387.4 1258.4 1151.0 1061.8 952.6 878.7 789.4 686.4	0.8 1.0 1.1 1.2 1.3 1.5 1.6 1.8 2.0	54408 45139 40942 37447 34545 30993 28588 25683 22332	1.0 1.2 1.0 1.3 1.4 1.6 1.7 1.8 2.8	20.0	14.0	132M/4B	178.0 178.0 178.0 178.0 178.0 178.0 151.3 151.3 151.3	246.0 246.0 246.0 246.0 246.0 246.0 209.1 209.1 209.1	- - - - - - - - -	- - - - - - - - -	133.5 133.5 133.5 133.5 133.5 133.5 113.5 113.5 113.5	468	-	410	423	576	536-549

P1 (kW)		iges	n2 (rpm)	M2 (Nm)	fs	Pt (20°C) (kW)	Pt (40°C) (kW)	Motor IE2	FR (kN)					~ Kg					mm
									MC	MS	PC	PS	CPC	M...	P...	F	FS	CPC	
5.50	PL 50004	1982.0	1.4	32242	1.2	20.0	14.0	132S/2C	178.0	246.0	-	-	133.5	460	-	402	415	568	536-549
		1672.3	1.7	27204	1.8				151.3	209.1	-	-	113.5						
		1387.4	2.0	22569	2.0				151.3	209.1	-	-	113.5						
		1258.4	2.2	20471	1.8				151.3	209.1	-	-	113.5						
		1151.0	2.4	18724	2.4				151.3	209.1	-	-	113.5						
		1061.8	2.6	17273	2.5				138.0	190.7	-	-	103.5						
		952.6	2.9	15496	2.8				138.0	190.7	-	-	103.5						
		878.7	3.2	14294	3.0				138.0	190.7	-	-	103.5						
	PL 35004	987.0	0.9	49952	0.8	17.0	11.9	132M/6C	144.0	204.0	-	-	108.0	338	-	302	310	401	516-529
		816.8	1.1	41338	0.9				144.0	204.0	-	-	108.0						
		762.5	1.2	38590	0.9				144.0	204.0	-	-	108.0						
		703.4	1.3	35599	1.0				144.0	204.0	-	-	108.0						
		677.7	1.3	34298	1.0				144.0	204.0	-	-	108.0						
		583.5	1.5	29531	1.2				122.4	173.4	-	-	91.8						
		496.0	1.8	25102	1.6				122.4	173.4	-	-	91.8						
		437.1	2.1	22121	1.7				122.4	173.4	-	-	91.8						
		379.6	2.4	19211	2.0				122.4	173.4	-	-	91.8						
		362.7	2.5	18356	2.0				122.4	173.4	-	-	91.8						
		328.5	2.7	16625	2.2				111.6	158.1	-	-	83.7						
		303.1	3.0	15340	2.4				111.6	158.1	-	-	83.7						
		277.5	3.2	14044	2.5				111.6	158.1	-	-	83.7						
		251.4	3.6	12723	2.7				104.4	147.9	-	-	78.3						
		230.3	3.9	11655	3.0				104.4	147.9	-	-	78.3						
	PL 35004	1289.7	1.1	41960	0.9	17.0	11.9	132M/4B	144.0	204.0	-	-	108.0	336	-	300	308	399	516-529
		1067.3	1.3	34724	1.0				144.0	204.0	-	-	108.0						
		987.0	1.4	32112	1.1				144.0	204.0	-	-	108.0						
		816.8	1.7	26574	1.3				122.4	173.4	-	-	91.8						
		762.5	1.8	24808	1.3				122.4	173.4	-	-	91.8						
		703.4	2.0	22885	1.4				122.4	173.4	-	-	91.8						
		677.7	2.1	22049	1.5				122.4	173.4	-	-	91.8						
		583.5	2.4	18984	1.7				122.4	173.4	-	-	91.8						
		496.0	2.8	16137	2.3				111.6	158.1	-	-	83.7						
		437.1	3.2	14221	2.5				111.6	158.1	-	-	83.7						
		379.6	3.7	12350	2.8				104.4	147.9	-	-	78.3						
		362.7	3.9	11800	2.9				104.4	147.9	-	-	78.3						
	PL 35004	1289.7	2.2	20980	1.6	17.0	11.9	132S/2C	122.4	173.4	-	-	91.8	328	-	292	300	391	516-529
		1067.3	2.6	17362	1.8				111.6	158.1	-	-	83.7						
		987.0	2.8	16056	1.9				111.6	158.1	-	-	83.7						
		816.8	3.4	13287	2.3				111.6	158.1	-	-	83.7						
		762.5	3.7	12404	2.4				104.4	147.9	-	-	78.3						
		703.4	4.0	11442	2.6				104.4	147.9	-	-	78.3						
		677.7	4.1	11024	2.6				104.4	147.9	-	-	78.3						
		583.5	4.8	9492	3.0				97.2	137.7	-	-	72.9						
	PL 30004	838.9	1.1	42456	0.8	17.0	11.9	132M/6C	90.0	137.0	-	-	67.5	332	-	291	299	395	496-509
		752.6	1.2	38089	0.9				90.0	137.0	-	-	67.5						
		694.3	1.3	35138	1.0				90.0	137.0	-	-	67.5						
		623.7	1.4	31565	1.1				90.0	137.0	-	-	67.5						
		576.0	1.6	29151	1.1				76.5	116.5	-	-	57.4						
		517.4	1.7	26185	1.2				76.5	116.5	-	-	57.4						
		477.3	1.9	24156	1.3				76.5	116.5	-	-	57.4						
		427.1	2.1	21615	1.5				76.5	116.5	-	-	57.4						
		396.0	2.3	20041	1.6				76.5	116.5	-	-	57.4						
		379.6	2.4	19211	1.6				76.5	116.5	-	-	57.4						
		362.7	2.5	18356	1.7				76.5	116.5	-	-	57.4						
		328.5	2.7	16625	1.8				69.8	106.2	-	-	52.3						
		314.9	2.9	15937	1.9				69.8	106.2	-	-	52.3						
		300.9	3.0	15228	2.0				69.8	106.2	-	-	52.3						
		251.4	3.6	12723	2.2				65.3	99.3	-	-	48.9						
	PL 30004	1015.5	1.4	33039	0.8	17.0	11.9	132M/4B	90.0	137.0	-	-	67.5	330	-	289	297	393	496-509
		838.9	1.7	27293	1.2				76.5	116.5	-	-	57.4						
		752.6	1.9	24486	1.3				76.5	116.5	-	-	57.4						
		694.3	2.0	22589	1.4				76.5	116.5	-	-	57.4						
		623.7	2.2	20292	1.5				76.5	116.5	-	-	57.4						
		576.0	2.4	18740	1.6				76.5	116.5	-	-	57.4						
		517.4	2.7	16833	1.8				69.8	106.2	-	-	52.3						
		477.3	2.9	15529	1.9				69.8	106.2	-	-	52.3						
		427.1	3.3	13896	2.1				69.8	106.2	-	-	52.3						
		396.0	3.5	12884	2.2				65.3	99.3	-	-	48.9						
		379.6	3.7	12350	2.3				65.3	99.3	-	-	48.9						
		362.7	3.9	11800	2.4				65.3	99.3	-	-	48.9						
		328.5	4.3	10688	2.6				65.3	99.3	-	-	48.9						
		314.9	4.4	10245	2.7				65.3	99.3	-	-	48.9						
		300.9	4.7	9790	2.8				60.8	92.5	-	-	45.6						

P1 (kW)		iges	n2 (rpm)	M2 (Nm)	fs	Pt (20°C) (kW)	Pt (40°C) (kW)	Motor IE2	FR (kN)					~ Kg					mm
									MC	MS	PC	PS	CPC	M...	P...	F	FS	CPC	
5.50	PL 30004	1425.1	2.0	23183	1.1	17.0	11.9	132S/2C	76.5	116.5	-	-	57.4	322	-	281	289	385	496-509
		1015.5	2.8	16520	1.4				69.8	106.2	-	-	52.3						
		838.9	3.3	13647	2.1				69.8	106.2	-	-	52.3						
		752.6	3.7	12243	2.3				65.3	99.3	-	-	48.9						
		694.3	4.0	11294	2.5				65.3	99.3	-	-	48.9						
		623.7	4.5	10146	2.7				65.3	99.3	-	-	48.9						
		576.0	4.9	9370	2.9				60.8	92.5	-	-	45.6						
	PL 25004	697.5	1.3	35300	1.0	15.0	10.5	132M/6C	90.0	137.0	-	-	67.5	299	-	263	271	360	476-489
		617.8	1.5	31267	1.1				90.0	137.0	-	-	67.5						
		556.9	1.6	28184	1.2				76.5	116.5	-	-	57.4						
		493.2	1.8	24961	1.3				76.5	116.5	-	-	57.4						
		455.5	2.0	23053	1.4				76.5	116.5	-	-	57.4						
		424.3	2.1	21474	1.5				76.5	116.5	-	-	57.4						
		408.4	2.2	20669	1.5				76.5	116.5	-	-	57.4						
		374.0	2.4	18928	1.6				76.5	116.5	-	-	57.4						
		338.8	2.7	17147	1.8				69.8	106.2	-	-	52.3						
	PL 25004	1013.4	1.4	32971	0.8	15.0	10.5	132M/4B	90.0	137.0	-	-	67.5	297	-	261	269	358	476-489
		934.9	1.5	30417	0.9				90.0	137.0	-	-	67.5						
		873.6	1.6	28422	0.9				76.5	116.5	-	-	57.4						
		803.1	1.7	26129	1.0				76.5	116.5	-	-	57.4						
		752.3	1.9	24476	1.0				76.5	116.5	-	-	57.4						
		697.5	2.0	22693	1.4				76.5	116.5	-	-	57.4						
		617.8	2.3	20100	1.5				76.5	116.5	-	-	57.4						
		556.9	2.5	18119	1.7				69.8	106.2	-	-	52.3						
		493.2	2.8	16046	1.9				69.8	106.2	-	-	52.3						
		455.5	3.1	14820	2.0				69.8	106.2	-	-	52.3						
		424.3	3.3	13804	2.1				69.8	106.2	-	-	52.3						
		408.4	3.4	13287	2.2				69.8	106.2	-	-	52.3						
		374.0	3.7	12168	2.3				65.3	99.3	-	-	48.9						
		338.8	4.1	11023	2.5				65.3	99.3	-	-	48.9						
	PL 25004	1529.3	1.8	24878	0.8	15.0	10.5	132S/2C	76.5	116.5	-	-	57.4	289	-	253	261	350	476-489
		1476.0	1.9	24011	1.0				76.5	116.5	-	-	57.4						
		1354.5	2.1	22034	0.9				76.5	116.5	-	-	57.4						
		1272.4	2.2	20699	1.2				76.5	116.5	-	-	57.4						
		1126.9	2.5	18332	1.3				76.5	116.5	-	-	57.4						
		1013.4	2.8	16485	1.4				69.8	106.2	-	-	52.3						
		934.9	3.0	15208	1.5				69.8	106.2	-	-	52.3						
		873.6	3.2	14211	1.6				69.8	106.2	-	-	52.3						
		803.1	3.5	13064	1.7				69.8	106.2	-	-	52.3						
		752.3	3.7	12238	1.8				65.3	99.3	-	-	48.9						
		697.5	4.0	11346	2.5				65.3	99.3	-	-	48.9						
		617.8	4.5	10050	2.7				60.8	92.5	-	-	45.6						
		556.9	5.0	9059	3.0				60.8	92.5	-	-	45.6						
	PL 18004	489.2	1.8	24758	0.8	13.0	9.1	132M/6C	51.0	90.1	119.0	158.1	38.3	220	247	189	225	270	452-469
		438.4	2.1	22187	0.8				51.0	90.1	119.0	158.1	38.3						
		377.2	2.4	19090	0.9				51.0	90.1	119.0	158.1	38.3						
		348.6	2.6	17643	1.0				46.5	82.2	108.5	144.2	34.9						
	PL 18004	770.5	1.8	25068	0.8	13.0	9.1	132M/4B	51.0	90.1	119.0	158.1	38.3	218	245	187	223	268	452-469
		720.0	1.9	23425	0.8				51.0	90.1	119.0	158.1	38.3						
		677.9	2.1	22055	0.8				51.0	90.1	119.0	158.1	38.3						
		620.0	2.3	20172	0.9				51.0	90.1	119.0	158.1	38.3						
		549.1	2.5	17865	1.0				46.5	82.2	108.5	144.2	34.9						
		489.2	2.9	15916	1.1				46.5	82.2	108.5	144.2	34.9						
		438.4	3.2	14263	1.2				46.5	82.2	108.5	144.2	34.9						
		377.2	3.7	12272	1.4				43.5	76.9	101.5	134.9	32.6						
		348.6	4.0	11342	1.5				43.5	76.9	101.5	134.9	32.6						
	PL 18004	1216.4	2.3	19788	0.8	13.0	9.1	132S/2C	51.0	90.1	119.0	158.1	38.3	210	237	179	215	260	452-469
		1113.0	2.5	18106	0.9				46.5	82.2	108.5	144.2	34.9						
		987.4	2.8	16062	1.0				46.5	82.2	108.5	144.2	34.9						
		928.8	3.0	15109	1.0				46.5	82.2	108.5	144.2	34.9						
		849.8	3.3	13824	1.1				46.5	82.2	108.5	144.2	34.9						
		818.8	3.4	13320	1.3				46.5	82.2	108.5	144.2	34.9						
		770.5	3.6	12534	1.3				43.5	76.9	101.5	134.9	32.6						
		720.0	3.9	11713	1.4				43.5	76.9	101.5	134.9	32.6						
		677.9	4.1	11028	1.5				43.5	76.9	101.5	134.9	32.6						
		620.0	4.5	10086	1.6				40.5	71.6	94.5	125.6	30.4						
		549.1	5.1	8932	1.8				40.5	71.6	94.5	125.6	30.4						
		489.2	5.7	7958	2.0				36.0	63.6	84.0	111.6	27.0						
		438.4	6.4	7132	2.1				36.0	63.6	84.0	111.6	27.0						
		377.2	7.4	6136	2.4				34.5	61.0	80.5	107.0	25.9						
		348.6	8.0	5671	2.6				33.0	58.3	77.0	102.3	24.8						

P1 (kW)		iges	n2 (rpm)	M2 (Nm)	fs	Pt (20°C) (kW)	Pt (40°C) (kW)	Motor IE2	FR (kN)					~ Kg					mm
									MC	MS	PC	PS	CPC	M...	P...	F	FS	CPC	
5.50	PL 16004	459.9	2.0	23275	0.8	11.0	7.7	132M/6C	51.0	90.1	119.0	158.1	38.3	206	233	175	211	256	428-445
		421.2	2.1	21317	0.9				51.0	90.1	119.0	158.1	38.3						
		388.6	2.3	19667	0.9				51.0	90.1	119.0	158.1	38.3						
		352.0	2.6	17815	1.0				46.5	82.2	108.5	1442	34.9						
	PL 16004	640.5	2.2	20838	0.8	11.0	7.7	132M/4B	51.0	90.1	119.0	158.1	38.3	204	231	173	209	254	428-445
		612.0	2.3	19911	0.8				51.0	90.1	119.0	158.1	38.3						
		554.4	2.5	18037	1.0				46.5	82.2	108.5	144.2	34.9						
		531.4	2.6	17289	0.9				46.5	82.2	108.5	144.2	34.9						
		507.7	2.8	16518	1.1				46.5	82.2	108.5	144.2	34.9						
		459.9	3.0	14963	1.2				46.5	82.2	108.5	144.2	34.9						
		440.9	3.2	14345	1.0				46.5	82.2	108.5	144.2	34.9						
		421.2	3.3	13704	1.2				46.5	82.2	108.5	144.2	34.9						
		388.6	3.6	12643	1.3				43.5	76.9	101.5	134.9	32.6						
		352.0	4.0	11452	1.4				43.5	76.9	101.5	134.9	32.6						
	PL 16004	1008.9	2.8	16412	0.9	11.0	7.7	132S/2C	46.5	82.2	108.5	144.2	34.9	196	223	165	201	246	428-445
		907.3	3.1	14759	0.8				46.5	82.2	108.5	144.2	34.9						
		806.4	3.5	13118	0.9				46.5	82.2	108.5	144.2	34.9						
		724.4	3.9	11784	0.9				43.5	76.9	101.5	134.9	32.6						
		640.5	4.4	10419	1.4				43.5	76.9	101.5	134.9	32.6						
		612.0	4.6	9956	1.4				40.5	71.6	94.5	125.6	30.4						
		576.1	4.9	9372	1.1				40.5	71.6	94.5	125.6	30.4						
		554.4	5.1	9019	1.8				40.5	71.6	94.5	125.6	30.4						
		531.4	5.3	8644	1.6				40.5	71.6	94.5	125.6	30.4						
		507.7	5.5	8259	1.9				36.0	63.6	84.0	111.6	27.0						
		459.9	6.1	7481	2.1				36.0	63.6	84.0	111.6	27.0						
		440.9	6.4	7172	1.9				36.0	63.6	84.0	111.6	27.0						
		421.2	6.6	6852	2.2				34.5	61.0	80.5	107.0	25.9						
		388.6	7.2	6321	2.4				34.5	61.0	80.5	107.0	25.9						
		352.0	8.0	5726	2.6				33.0	58.3	77.0	102.3	24.8						
	PL 10004	459.9	3.0	14963	0.8	11.0	7.7	132M/4B	50.4	73.6	-	-	37.8	196	-	163	201	246	410-421
		421.2	3.3	13704	0.8				50.4	73.6	-	-	37.8						
		388.6	3.6	12643	0.9				47.1	68.9	-	-	35.3						
		352.0	4.0	11452	1.0				47.1	68.9	-	-	35.3						
	PL 10004	640.5	4.4	10419	0.9	11.0	7.7	132S/2C	47.1	68.9	-	-	35.3	188	-	155	193	238	410-421
		612.0	4.6	9956	0.9				43.9	64.1	-	-	32.9						
		576.1	4.9	9372	0.8				43.9	64.1	-	-	32.9						
		554.4	5.1	9019	1.2				43.9	64.1	-	-	32.9						
		531.4	5.3	8644	1.1				43.9	64.1	-	-	32.9						
		507.7	5.5	8259	1.3				39.0	57.0	-	-	29.3						
		459.9	6.1	7481	1.4				39.0	57.0	-	-	29.3						
		440.9	6.4	7172	1.2				39.0	57.0	-	-	29.3						
		421.2	6.6	6852	1.5				37.4	54.6	-	-	28.0						
		388.6	7.2	6321	1.6				37.4	54.6	-	-	28.0						
		352.0	8.0	5726	1.7				35.8	52.3	-	-	26.8						
	PL 7004	474.3	5.9	7716	0.8	8.0	5.6	132S/2C	-	-	69.0	82.8	51.8	-	151	133	154	168	392-400
		434.4	6.4	7067	0.8				-	-	69.0	82.8	51.8						
		400.7	7.0	6518	0.9				-	-	66.1	79.4	49.6						
		347.9	8.0	5659	1.0				-	-	63.3	75.9	47.4						
		332.4	8.4	5407	1.0				-	-	63.3	75.9	47.4						
		301.1	9.3	4898	1.1				-	-	60.4	72.5	45.3						
	PL 50003	293.6	3.1	15398	2.2	25.0	17.5	132M/6C	138.0	190.7	-	-	103.5	462	-	404	417	566	536-549
	PL 35003	230.3	3.9	12078	2.4	23.0	16.1	132M/6C	104.4	147.9	-	-	78.3	330	-	294	302	393	516-529
		191.1	4.7	10022	2.8				97.2	137.7	-	-	72.9						
	PL 25003	317.2	2.8	16636	1.1	20.0	14.0	132M/6C	69.8	106.2	-	-	52.3	293	-	257	265	354	476-489
		262.8	3.4	13783	1.2				69.8	106.2	-	-	52.3						
		226.6	4.0	11884	1.4				65.3	99.3	-	-	48.9						
		218.7	4.1	11470	1.9				65.3	99.3	-	-	48.9						
		188.5	4.8	9886	2.1				60.8	92.5	-	-	45.6						
		167.0	5.4	8758	2.4				60.8	92.5	-	-	45.6						
		156.0	5.8	8181	2.5				54.0	82.2	-	-	40.5						
		134.3	6.7	7043	2.8				51.8	78.8	-	-	38.8						
	PL 25003	317.2	4.4	10694	1.5	20.0	14.0	132M/4B	65.3	99.3	-	-	48.9	291	-	255	263	352	476-489
		262.8	5.3	8860	1.8				60.8	92.5	-	-	45.6						
		226.6	6.2	7640	2.0				54.0	82.2	-	-	40.5						
		218.7	6.4	7373	2.7				54.0	82.2	-	-	40.5						
	PL 25003	317.2	8.8	5347	2.7	20.0	14.0	132S/2C	47.3	71.9	-	-	35.4	283	-	247	255	344	476-489
	PL 18003	180.2	5.0	9451	1.5	17.0	11.9	132M/6C	40.5	71.6	94.5	125.6	30.4	213	240	182	218	263	452-469
		149.1	6.0	7820	1.7				36.0	63.6	84.0	111.6	27.0						
		128.4	7.0	6734	1.9				34.5	61.0	80.5	107.0	25.9						
		106.7	8.4	5596	2.6				33.0	58.3	77.0	102.3	24.8						
		94.5	9.5	4956	2.9				30.0	53.0	70.0	93.0	22.5						

P1 (kW)		iges	n2 (rpm)	M2 (Nm)	fs	Pt (20°C) (kW)	Pt (40°C) (kW)	Motor IE2	FR (kN) MC	MS	PC	PS	CPC	~ Kg M…	P…	F	FS	CPC	mm
5.50	PL 18003	180.2	7.8	6075	2.1	17.0	11.9	132M/4B	33.0	58.3	77.0	102.3	24.8	211	238	180	216	261	452-469
		149.1	9.4	5027	2.5				31.5	55.7	73.5	97.7	23.6						
		128.4	10.9	4329	2.8				30.0	53.0	70.0	93.0	22.5						
	PL 16003	274.1	3.3	14375	0.8	15.0	10.5	132M/6C	46.5	82.2	108.5	144.2	34.9	200	227	168	205	250	428-445
		226.8	4.0	11895	0.9				43.5	76.9	101.5	134.9	32.6						
		195.3	4.6	10243	1.1				40.5	71.6	94.5	125.6	30.4						
		188.2	4.8	9870	1.1				40.5	71.6	94.5	125.6	30.4						
		155.9	5.8	8176	1.3				36.0	63.6	84.0	111.6	27.0						
		144.0	6.3	7552	1.4				36.0	63.6	84.0	111.6	27.0						
		129.4	7.0	6786	1.5				34.5	61.0	80.5	107.0	25.9						
		124.0	7.3	6503	2.0				34.5	61.0	80.5	107.0	25.9						
		118.5	7.6	6215	1.6				33.0	58.3	77.0	102.3	24.8						
		109.3	8.2	5732	2.2				33.0	58.3	77.0	102.3	24.8						
		94.9	9.5	4977	2.5				31.5	55.7	73.5	97.7	23.6						
	PL 16003	274.1	5.1	9241	1.1	15.0	10.5	132M/4B	40.5	71.6	94.5	125.6	30.4	198	225	166	203	248	428-445
		235.4	5.9	7936	1.0				36.0	63.6	84.0	111.6	27.0						
		226.8	6.2	7647	1.3				36.0	63.6	84.0	111.6	27.0						
		209.7	6.7	7070	1.1				34.5	61.0	80.5	107.0	25.9						
		195.3	7.2	6584	1.5				34.5	61.0	80.5	107.0	25.9						
		188.2	7.4	6345	1.6				34.5	61.0	80.5	107.0	25.9						
		155.9	9.0	5256	1.8				31.5	55.7	73.5	97.7	23.6						
		144.0	9.7	4855	2.0				30.0	53.0	70.0	93.0	22.5						
		129.4	10.8	4363	2.1				30.0	53.0	70.0	93.0	22.5						
		124.0	11.3	4181	2.9				30.0	53.0	70.0	93.0	22.5						
		118.5	11.8	3995	2.3				30.0	53.0	70.0	93.0	22.5						
	PL 16003	330.3	8.5	5568	1.3	15.0	10.5	132S/2C	33.0	58.3	77.0	102.3	24.8	190	217	158	195	240	428-445
		274.1	10.2	4621	2.1				30.0	53.0	70.0	93.0	22.5						
		235.4	11.9	3968	1.8				30.0	53.0	70.0	93.0	22.5						
		226.8	12.3	3823	2.4				30.0	53.0	70.0	93.0	22.5						
		209.7	13.4	3535	1.9				28.2	49.8	65.8	87.4	21.2						
		195.3	14.3	3292	2.7				28.2	49.8	65.8	87.4	21.2						
		188.2	14.9	3173	2.8				28.2	49.8	65.8	87.4	21.2						
	PL 10003	274.1	5.1	9241	0.8	15.0	10.5	132M/4B	43.9	64.1	-	-	32.9	190	-	157	195	240	410-421
		226.8	6.2	7647	0.9				39.0	57.0	-	-	29.3						
		195.3	7.2	6584	1.0				37.4	54.6	-	-	28.0						
		188.2	7.4	6345	1.1				37.4	54.6	-	-	28.0						
		173.6	8.1	5853	1.5				35.8	52.3	-	-	26.8						
		155.9	9.0	5256	1.2				34.1	49.9	-	-	25.6						
		144.0	9.7	4855	1.7				32.5	47.5	-	-	24.4						
		129.4	10.8	4363	1.5				32.5	47.5	-	-	24.4						
		124.0	11.3	4181	1.9				32.5	47.5	-	-	24.4						
		118.5	11.8	3995	1.6				32.5	47.5	-	-	24.4						
		109.3	12.8	3685	2.2				31.5	46.1	-	-	23.6						
		94.9	14.8	3200	2.4				30.6	44.7	-	-	22.9						
	PL 10003	173.6	5.2	9104	1.0	15.0	10.5	132M/6C	43.9	64.1	-	-	32.9	192	-	159	197	242	410-421
		155.9	5.8	8176	0.9				39.0	57.0	-	-	29.3						
		144.0	6.3	7552	1.2				39.0	57.0	-	-	29.3						
		129.4	7.0	6786	1.0				37.4	54.6	-	-	28.0						
		124.0	7.3	6503	1.3				37.4	54.6	-	-	28.0						
		118.5	7.6	6215	1.1				35.8	52.3	-	-	26.8						
		109.3	8.2	5732	1.5				35.8	52.3	-	-	26.8						
		94.9	9.5	4977	1.7				34.1	49.9	-	-	25.6						
		82.1	11.0	4306	2.2				32.5	47.5	-	-	24.4						
		75.2	12.0	3944	2.4				32.5	47.5	-	-	24.4						
		62.9	14.3	3299	2.8				30.6	44.7	-	-	22.9						
		57.6	15.6	3021	3.0				30.6	44.7	-	-	22.9						
	PL 10003	330.3	8.5	5568	0.9	15.0	10.5	132S/2C	35.8	52.3	-	-	26.8	182	-	149	187	232	410-421
		274.1	10.2	4621	1.4				32.5	47.5	-	-	24.4						
		235.4	11.9	3968	1.2				32.5	47.5	-	-	24.4						
		226.8	12.3	3823	1.6				32.5	47.5	-	-	24.4						
		209.7	13.4	3535	1.3				30.6	44.7	-	-	22.9						
		195.3	14.3	3292	1.8				30.6	44.7	-	-	22.9						
		188.2	14.9	3173	1.9				30.6	44.7	-	-	22.9						
		173.6	16.1	2926	2.6				30.6	44.7	-	-	22.9						
		155.9	18.0	2628	2.2				27.0	39.4	-	-	20.2						
		144.0	19.4	2427	3.0				27.0	39.4	-	-	20.2						
		129.4	21.6	2181	2.6				27.0	39.4	-	-	20.2						
		118.5	23.6	1998	2.7				25.4	37.1	-	-	19.0						

P1 (kW)		iges	n2 (rpm)	M2 (Nm)	fs	Pt (20°C) (kW)	Pt (40°C) (kW)	Motor IE2	FR (kN)					~ Kg					mm
									MC	MS	PC	PS	CPC	M...	P...	F	FS	CPC	
5.50	PL 7003	127.9	7.0	6708	0.9	14.0	9.8	132M/6C	-	-	66.1	79.4	49.6	-	155	137	158	172	392-403
		112.9	8.0	5921	0.9				-	-	63.3	75.9	47.4						
		102.1	8.8	5355	1.0				-	-	60.4	72.5	45.3						
		93.7	9.6	4914	1.0				-	-	57.5	69.0	43.1						
		88.4	10.2	4636	1.0				-	-	57.5	69.0	43.1						
		78.3	11.5	4106	1.2				-	-	57.5	69.0	43.1						
		71.7	12.6	3760	1.3				-	-	54.1	64.9	40.5						
		64.8	13.9	3398	1.5				-	-	54.1	64.9	40.5						
		53.8	16.7	2822	1.8				-	-	54.1	64.9	40.5						
	PL 7003	174.4	8.0	5880	0.8	14.0	9.8	132M/4B	-	-	63.3	75.9	47.4	-	153	135	156	170	392-403
		155.4	9.0	5239	0.9				-	-	60.4	72.5	45.3						
		148.8	9.4	5017	1.0				-	-	60.4	72.5	45.3						
		139.2	10.1	4693	0.9				-	-	57.5	69.0	43.1						
		127.9	10.9	4312	1.3				-	-	57.5	69.0	43.1						
		112.9	12.4	3806	1.3				-	-	55.8	66.9	41.8						
		102.1	13.7	3442	1.5				-	-	55.8	66.9	41.8						
		93.7	14.9	3159	1.5				-	-	54.1	64.9	40.5						
		88.4	15.8	2980	1.4				-	-	54.1	64.9	40.5						
		78.3	17.9	2640	1.7				-	-	51.2	61.4	38.4						
		71.7	19.5	2417	1.9				-	-	47.7	57.3	35.8						
		64.8	21.6	2185	2.2				-	-	47.7	57.3	35.8						
		53.8	26.0	1814	2.6				-	-	44.9	53.8	33.6						
	PL 7003	283.8	9.9	4784	0.8	14.0	9.8	132S/2C	-	-	57.5	69.0	43.1	-	145	127	148	162	392-403
		244.7	11.4	4125	1.1				-	-	57.5	69.0	43.1						
		216.7	12.9	3653	1.3				-	-	54.1	64.9	40.5						
		194.9	14.4	3286	1.1				-	-	54.1	64.9	40.5						
		174.4	16.1	2940	1.4				-	-	54.1	64.9	40.5						
		155.4	18.0	2620	1.5				-	-	47.7	57.3	35.8						
		148.8	18.8	2508	1.8				-	-	47.7	57.3	35.8						
		139.2	20.1	2347	1.7				-	-	47.7	57.3	35.8						
		127.9	21.9	2156	2.2				-	-	47.7	57.3	35.8						
		112.9	24.8	1903	2.3				-	-	44.9	53.8	33.6						
		102.1	27.4	1721	2.7				-	-	44.9	53.8	33.6						
		93.7	29.9	1580	2.6				-	-	42.6	51.1	31.9						
		88.4	31.7	1490	2.4				-	-	42.6	51.1	31.9						
	PL 5003	90.7	9.9	4757	0.8	10.0	7.0	132M/6C	17.5	21.2	31.5	36.5	23.6	117	126	108	119	130	370-385
		82.1	11.0	4306	0.8				17.5	21.2	31.5	36.5	23.6						
		75.2	12.0	3944	1.0				17.5	21.2	31.5	36.5	23.6						
		62.9	14.3	3299	1.1				16.5	22.5	29.6	34.3	22.2						
		57.6	15.6	3021	1.2				16.5	22.5	29.6	34.3	22.2						
		52.1	17.3	2732	1.2				16.5	22.5	29.6	34.3	22.2						
	PL 5003	129.4	10.8	4363	0.8	10.0	7.0	132M/4B	17.5	22.5	31.5	36.5	23.6	115	124	106	117	128	370-385
		119.3	11.7	4022	0.9				17.5	22.5	31.5	36.5	23.6						
		99.0	14.1	3338	1.0				16.5	21.2	29.6	34.3	22.2						
		90.7	15.4	3058	1.2				16.5	21.2	29.6	34.3	22.2						
		82.1	17.1	2768	1.2				15.6	20.0	28.0	32.5	21.0						
		75.2	18.6	2535	1.4				15.6	20.0	28.0	32.5	21.0						
		62.9	22.3	2121	1.5				14.0	18.0	25.2	29.2	18.9						
		57.6	24.3	1942	1.8				13.7	17.6	24.6	28.5	18.4						
		52.1	26.9	1757	1.8				13.3	17.1	23.9	27.7	18.0						
	PL 5003	195.3	14.3	3292	0.9	10.0	7.0	132S/2C	16.5	21.2	29.6	34.3	22.2	107	116	98	109	120	370-385
		173.6	16.1	2926	0.8				16.5	21.2	29.6	34.3	22.2						
		162.0	17.3	2731	1.0				16.5	21.2	29.6	34.3	22.2						
		155.9	18.0	2628	1.3				14.5	18.7	26.1	30.3	19.6						
		149.5	18.7	2520	1.1				14.5	18.7	26.1	30.3	19.6						
		129.4	21.6	2181	1.5				14.5	18.7	26.1	30.3	19.6						
		119.3	23.5	2011	1.6				13.7	17.6	24.6	28.5	18.4						
		99.0	28.3	1669	1.9				13.0	16.7	23.3	27.0	17.5						
		90.7	30.9	1529	2.2				13.0	16.7	23.3	27.0	17.5						
		82.1	34.1	1384	2.2				12.3	15.8	22.1	25.6	16.5						
		75.2	37.2	1268	2.5				12.3	15.8	22.1	25.6	16.5						
		62.9	44.5	1060	2.7				11.4	14.6	20.5	23.7	15.4						
	PL 2503	90.7	15.4	3058	0.8	8.0	5.6	132M/4B	16.5	21.2	29.6	34.3	22.2	109	118	100	111	122	348-363
		82.1	17.1	2768	0.8				15.6	20.0	28.0	32.5	21.0						
		75.2	18.6	2535	1.0				15.6	20.0	28.0	32.5	21.0						
		62.9	22.3	2121	1.0				14.0	18.0	25.2	29.2	18.9						
		57.6	24.3	1942	1.2				13.7	17.6	24.6	28.5	18.4						
		52.1	26.9	1757	1.2				13.3	17.1	23.9	27.7	18.0						
	PL 2503	57.6	15.6	3021	0.9	8.0	5.6	132M/6C	16.5	21.2	29.6	34.3	22.2	111	120	102	113	124	348-363
		52.1	17.3	2732	0.8				16.5	21.2	29.6	34.3	22.2						

P1 (kW)		iges	n2 (rpm)	M2 (Nm)	fs	Pt (20°C) (kW)	Pt (40°C) (kW)	Motor IE2	FR (kN)					~ Kg					mm
									MC	MS	PC	PS	CPC	M...	P...	F	FS	CPC	
5.50	PL 2503	155.9	18.0	2628	0.9	8.0	5.6	132S/2C	14.5	18.7	26.1	30.3	19.6	101	110	92	103	114	348-363
		129.4	21.6	2181	1.0				14.5	18.7	26.1	30.3	19.6						
		119.3	23.5	2011	1.1				13.7	17.6	24.6	28.5	18.4						
		99.0	28.3	1669	1.3				13.0	16.7	23.3	27.0	17.5						
		90.7	30.9	1529	1.5				13.0	16.7	23.3	27.0	17.5						
		82.1	34.1	1384	1.5				12.3	15.8	22.1	25.6	16.5						
		75.2	37.2	1268	1.8				12.3	15.8	22.1	25.6	16.5						
		62.9	44.5	1060	1.8				11.4	14.6	20.5	23.7	15.4						
		57.6	48.6	971	2.2				11.2	14.4	20.2	23.4	15.1						
		52.1	53.7	878	2.1				10.9	14.0	19.5	22.6	14.6						
	PL 1603*	85.3	32.8	1438	0.8	5.0	3.5	132S/2C	3.9	4.7	8.4	10.5	6.3	87	89	85	88	92	326-340
		78.7	35.6	1327	0.8				3.9	4.7	8.4	10.5	6.3						
		70.8	39.5	1194	0.9				3.7	4.5	8.0	10.1	6.0						
		65.3	42.9	1101	1.0				3.6	4.4	7.8	9.8	5.9						
		54.2	51.7	914	1.1				3.5	4.3	7.7	9.6	5.8						
	PL 16002	48.9	18.4	2658	2.4	23.0	16.1	132M/6C	24.9	44.0	58.1	77.2	18.7	192	219	160	197	242	428-445
		40.5	22.2	2201	2.8				24.9	44.0	58.1	77.2	18.7						
	PL 10002	48.9	18.4	2658	1.7	23.0	16.1	132M/6C	27.0	39.4	-	-	20.2	184	-	151	189	234	410-421
		40.5	22.2	2201	1.9				27.0	39.4	-	-	20.2						
		33.6	26.8	1826	3.0				25.4	37.1	-	-	19.0						
	PL 10002	48.9	28.6	1708	2.4	23.0	16.1	132M/4B	24.1	35.2	-	-	18.0	182	-	149	187	232	410-421
		40.5	34.6	1415	2.8				22.8	33.3	-	-	17.1						
	PL 7002	50.8	17.7	2761	1.0	18.0	12.6	132M/6C	-	-	47.7	57.3	35.8	-	149	131	152	165	392-403
		42.1	21.4	2288	1.4				-	-	47.7	57.3	35.8						
		36.3	24.8	1973	1.9				-	-	44.9	53.8	33.6						
		30.0	30.0	1630	2.3				-	-	42.6	51.1	31.9						
		26.6	33.8	1446	2.9				-	-	40.3	48.3	30.2						
	PL 7002	50.8	27.6	1775	1.4	18.0	12.6	132M/4B	-	-	43.7	52.4	32.8	-	147	129	150	163	392-403
		42.1	33.3	1471	2.1				-	-	41.4	49.7	31.1						
		36.3	38.6	1268	2.8				-	-	38.5	46.2	29.5						
	PL 7002	50.8	55.1	887	2.5	18.0	12.6	132S/2C	-	-	35.7	42.8	26.7	-	139	121	142	155	392-403
	PL 5002	40.5	22.2	2201	1.0	15.0	10.5	132M/6C	14.5	18.7	26.1	30.3	19.6	111	120	102	113	124	370-385
		34.9	25.8	1897	1.3				13.7	17.6	24.6	28.5	18.4						
		28.9	31.1	1571	1.6				13.0	16.7	23.3	27.0	17.5						
		23.1	39.0	1255	2.3				11.7	15.1	21.1	24.5	15.8						
		18.4	48.9	1000	2.3				11.2	14.4	20.2	23.4	15.1						
	PL 5002	48.9	28.6	1708	1.0	15.0	10.5	132M/4B	13.3	17.1	23.9	27.7	18.0	109	118	100	111	122	370-385
		40.5	34.6	1415	1.5				12.3	15.8	22.1	25.6	16.5						
		34.9	40.1	1219	1.9				11.7	15.1	21.1	24.5	15.8						
		28.9	48.4	1010	2.3				11.2	14.4	20.2	23.4	15.1						
	PL 5002	48.9	57.3	854	1.8	15.0	10.5	132S/2C	10.9	14.0	19.5	22.6	14.6	101	110	92	103	114	370-385
		40.5	69.1	707	2.7				10.0	12.8	18.0	20.8	13.5						
	PL 2502	34.9	25.8	1897	0.9	12.0	8.4	132M/6C	13.7	17.6	24.6	28.5	18.4	105	114	97	107	118	348-363
		28.9	31.1	1571	1.1				13.0	16.7	23.3	27.0	17.5						
		23.1	39.0	1255	1.6				11.7	15.1	21.1	24.5	15.8						
		18.4	48.9	1000	1.6				11.2	14.4	20.2	23.4	15.1						
		16.2	55.6	880	2.3				10.9	14.0	19.5	22.6	14.6						
		13.4	67.2	728	2.7				10.2	13.1	18.3	21.2	13.7						
	PL 2502	40.5	34.6	1415	1.0	12.0	8.4	132M/4B	12.3	15.8	22.1	25.6	16.5	103	112	95	105	116	348-363
		34.9	40.1	1219	1.4				11.7	15.1	21.1	24.5	15.8						
		28.9	48.4	1010	1.6				11.2	14.4	20.2	23.4	15.1						
		23.1	60.6	807	2.3				10.3	13.3	18.6	21.5	13.9						
		18.4	76.1	643	2.3				9.8	12.6	17.6	20.4	13.2						
	PL 2502	62.8	44.6	1097	1.0	12.0	8.4	132S/2C	11.4	14.6	20.5	23.7	15.4	95	104	87	97	108	348-363
		48.9	57.3	854	1.2				10.9	14.0	19.5	22.6	14.6						
		40.5	69.1	707	1.8				10.0	12.8	18.0	20.8	13.5						
		34.9	80.2	610	2.4				9.5	12.2	17.0	19.7	12.8						
		28.9	96.9	505	2.8				9.0	11.6	16.2	18.8	12.2						
	PL 1602	24.0	37.5	1304	0.8	8.0	5.6	132M/6C	3.9	4.7	8.4	10.5	6.3	91	93	89	92	96	326-340
		19.9	45.2	1082	1.0				3.6	4.4	7.8	9.8	5.9						
		15.2	59.2	826	1.2				3.2	4.0	7.1	8.9	5.3						
		12.6	71.4	685	1.4				3.1	3.8	6.8	8.6	5.1						
	PL 1602	28.9	48.4	1010	1.0	8.0	5.6	132M/4B	3.5	4.3	7.7	9.6	5.8	89	91	87	90	94	326-340
		24.0	58.3	839	1.2				3.2	4.0	7.1	8.9	5.3						
		19.9	70.4	695	1.4				3.1	3.8	6.8	8.6	5.1						
		15.2	92.1	531	1.7				2.9	3.5	6.2	7.8	4.7						
		12.6	111.1	440	2.0				2.7	3.3	5.9	7.4	4.5						

* Soğutucu gereklidir / Cooling is required / Kühlung ist erforderlich / È richiesto raffreddamento / Le refroidissement est nécessaire / Se requiere un enfriamiento

P1 (kW)	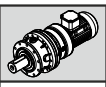	iges	n2 (rpm)	M2 (Nm)	fs	Pt (20°C) (kW)	Pt (40°C) (kW)	Motor IE2	FR (kN)					~ Kg					mm
									MC	MS	PC	PS	CPC	M...	P...	F	FS	CPC	
5.50	PL 1602	37.8	74.1	660	1.0	8.0	5.6	132S/2C	3.1	3.8	6.7	8.4	5.0	81	83	79	82	86	326-340
		31.4	89.2	549	1.2				2.9	3.5	6.2	7.8	4.7						
		28.9	96.9	505	1.8				2.8	3.5	6.2	7.7	4.6						
		24.0	116.7	419	2.1				2.7	3.3	5.8	7.3	4.4						
		19.9	140.7	348	2.4				2.5	3.1	5.5	6.9	4.1						
		15.2	184.2	266	3.0				2.3	2.9	5.1	6.4	3.8						
	PL 1002	24.0	58.3	839	0.8	8.0	5.6	132M/4B	3.2	4.0	7.1	8.9	5.3	87	89	85	88	92	304-318
		19.9	70.4	695	0.9				3.1	3.8	6.8	8.6	5.1						
		15.2	92.1	531	1.1				2.9	3.5	6.2	7.8	4.7						
		12.6	111.1	440	1.3				2.7	3.3	5.9	7.4	4.5						
	PL 1002	15.2	59.2	826	0.8	8.0	5.6	132M/6C	3.2	4.0	7.1	8.9	5.3	89	91	87	90	94	304-318
		12.6	71.4	685	0.9				3.1	3.8	6.8	8.6	5.1						
	PL 1002	31.4	89.2	549	0.8	8.0	5.6	132S/2C	2.9	3.5	6.2	7.8	4.7	79	81	77	80	84	304-318
		28.9	96.9	505	1.2				2.8	3.5	6.2	7.7	4.6						
		24.0	116.7	419	1.3				2.7	3.3	5.8	7.3	4.4						
		19.9	140.7	348	1.6				2.5	3.1	5.5	6.9	4.1						
		15.2	184.2	266	2.0				2.3	2.9	5.1	6.4	3.8						
		12.6	222.2	220	2.3				2.2	2.7	4.9	6.1	3.6						
	PL 2501	7.25	124.1	408	2.1	20.0	14.0	132M/6C	8.5	10.9	15.3	17.7	11.5	99	108	90	101	112	348-363
	PL 1601	6.75	133.3	380	1.3	12.0	8.4	132M/6C	2.5	3.1	5.5	6.9	4.1	85	87	83	86	90	326-340
		5.60	160.7	315	1.9				2.4	3.0	5.3	6.7	4.0						
	PL 1601	6.75	207.4	244	1.9	12.0	8.4	132M/4B	2.3	2.8	4.9	6.2	3.7	83	85	81	84	88	326-340
		5.60	250.0	203	2.7				2.1	2.6	4.7	5.9	3.5						
	PL 1001	6.75	207.4	244	1.3	12.0	8.4	132M/4B	2.3	2.8	4.9	6.2	3.7	81	83	79	82	86	304-318
		5.60	250.0	203	1.8				2.1	2.6	4.7	5.9	3.5						
		4.29	326.3	155	3.0				2.0	2.5	4.4	5.5	3.3						
	PL 1001	6.75	252.8	380	0.9	12.0	8.4	132M/6C	2.5	3.1	5.5	6.9	4.1	83	85	81	84	88	304-318
		5.60	209.8	315	1.2				2.4	3.0	5.3	6.7	4.0						
		4.29	160.7	242	2.1				2.3	2.8	5.0	6.2	3.7						
		3.56	133.3	200	2.5				2.1	2.6	4.6	5.8	3.5						
	PL 1001	8.67	323.0	157	1.2	12.0	8.4	132S/2C	2.0	2.5	4.4	5.5	3.3	73	75	71	74	78	304-318
		6.75	414.8	122	2.3				1.8	2.3	4.0	5.0	3.0						
7.50	PL 90004	1623.2	0.6	112022	0.9	30.0	21.0	160M/6B	310.0	432.0	-	-	232.5	792	-	696	718	966	576-585
		1345.0	0.7	92823	1.1				310.0	432.0	-	-	232.5						
		1119.0	0.8	77226	1.3				310.0	432.0	-	-	232.5						
		926.1	1.0	63913	1.5				310.0	432.0	-	-	232.5						
		854.4	1.1	58965	1.6				310.0	432.0	-	-	232.5						
		798.3	1.1	55093	1.6				310.0	432.0	-	-	232.5						
		742.1	1.2	51215	1.7				310.0	432.0	-	-	232.5						
		687.5	1.3	47446	1.9				310.0	432.0	-	-	232.5						
		630.8	1.4	43533	2.5				310.0	432.0	-	-	232.5						
		585.4	1.5	40400	2.1				263.5	367.2	-	-	197.6						
		543.9	1.7	37536	2.3				263.5	367.2	-	-	197.6						
		504.1	1.8	34789	2.4				263.5	367.2	-	-	197.6						
	PL 90004	1623.2	0.9	72014	1.3	30.0	21.0	132M/4C	310.0	432.0	-	-	232.5	750	-	654	676	924	576-585
		1345.0	1.0	59672	1.5				310.0	432.0	-	-	232.5						
		1119.0	1.3	49645	1.8				310.0	432.0	-	-	232.5						
		926.1	1.5	41087	2.1				263.5	367.2	-	-	197.6						
		854.4	1.6	37906	2.2				263.5	367.2	-	-	197.6						
		798.3	1.8	35417	2.4				263.5	367.2	-	-	197.6						
		742.1	1.9	32924	2.5				263.5	367.2	-	-	197.6						
		687.5	2.0	30501	2.7				263.5	367.2	-	-	197.6						
		585.4	2.4	25972	3.0				263.5	367.2	-	-	197.6						
	PL 90004	1623.2	1.7	36007	2.3	30.0	21.0	132M/2A	263.5	367.2	-	-	197.6	746	-	650	672	920	576-585
		1345.0	2.1	29836	2.7				263.5	367.2	-	-	197.6						
	PL 65004	1008.1	0.9	69572	1.2	25.0	17.5	160M/6B	156.0	216.0	-	-	117.0	604	-	546	560	712	556-569
		838.8	1.1	57888	1.4				156.0	216.0	-	-	117.0						
		694.2	1.3	47909	1.6				156.0	216.0	-	-	117.0						
		640.4	1.4	44196	1.7				156.0	216.0	-	-	117.0						
		556.2	1.6	38385	2.0				132.6	183.6	-	-	99.5						
		515.3	1.7	35562	2.1				132.6	183.6	-	-	99.5						
		456.4	2.0	31498	2.3				132.6	183.6	-	-	99.5						
		407.7	2.2	28137	2.5				132.6	183.6	-	-	99.5						
		364.4	2.5	25148	2.7				132.6	183.6	-	-	99.5						
		333.7	2.7	23030	3.0				120.9	167.4	-	-	90.7						
	PL 65004	1008.1	1.4	44725	1.7	25.0	17.5	132M/4C	156.0	216.0	-	-	117.0	562	-	504	518	670	556-569
		838.8	1.7	37214	2.0				132.6	183.6	-	-	99.5						
		694.2	2.0	30799	2.3				132.6	183.6	-	-	99.5						
		640.4	2.2	28412	2.5				132.6	183.6	-	-	99.5						
		556.2	2.5	24676	2.8				120.9	167.4	-	-	90.7						
		515.3	2.7	22862	3.0				120.9	167.4	-	-	90.7						

P1 (kW)		iges	n2 (rpm)	M2 (Nm)	fs	Pt (20°C) (kW)	Pt (40°C) (kW)	Motor IE2	FR (kN)					~ Kg					mm
									MC	MS	PC	PS	CPC	M...	P...	F	FS	CPC	
7.50	PL 65004	1008.1	2.8	22362	3.0	25.0	17.5	132M/2A	120.9	167.4	-	-	90.7	558	-	500	514	666	556-569
	PL 50004	952.6	0.9	65742	0.8	20.0	14.0	160M/6B	178.0	246.0	-	-	133.5	512	-	454	467	620	536-549
		878.7	1.0	60642	0.9				178.0	246.0	-	-	133.5						
		789.4	1.1	54479	0.9				178.0	246.0	-	-	133.5						
		686.4	1.3	47371	1.4				178.0	246.0	-	-	133.5						
		616.6	1.5	42553	1.6				178.0	246.0	-	-	133.5						
		591.0	1.5	40787	1.6				151.3	209.1	-	-	113.5						
		564.7	1.6	38972	1.7				151.3	209.1	-	-	113.5						
		511.6	1.8	35307	1.8				151.3	209.1	-	-	113.5						
		471.9	1.9	32567	1.9				151.3	209.1	-	-	113.5						
		432.2	2.1	29827	2.1				151.3	209.1	-	-	113.5						
		391.5	2.3	27019	2.3				151.3	209.1	-	-	113.5						
		358.5	2.5	24741	2.4				138.0	190.7	-	-	103.5						
		324.8	2.8	22415	2.7				138.0	190.7	-	-	103.5						
	PL 50004	1387.4	1.0	61553	0.9	20.0	14.0	132M/4C	178.0	246.0	-	-	133.5	470	-	412	425	578	536-549
		1151.0	1.2	51065	1.0				178.0	246.0	-	-	133.5						
		1061.8	1.3	47107	1.1				178.0	246.0	-	-	133.5						
		952.6	1.5	42263	1.2				178.0	246.0	-	-	133.5						
		878.7	1.6	38984	1.2				151.3	209.1	-	-	113.5						
		789.4	1.8	35022	1.3				151.3	209.1	-	-	113.5						
		686.4	2.0	30453	2.1				151.3	209.1	-	-	113.5						
		616.6	2.3	27356	2.2				151.3	209.1	-	-	113.5						
		591.0	2.4	26220	2.3				151.3	209.1	-	-	113.5						
		564.7	2.5	25053	2.4				151.3	209.1	-	-	113.5						
		511.6	2.7	22697	2.6				138.0	190.7	-	-	103.5						
		471.9	3.0	20936	2.8				138.0	190.7	-	-	103.5						
		432.2	3.2	19175	3.0				138.0	190.7	-	-	103.5						
	PL 50004	1982.0	1.4	43966	0.9	20.0	14.0	132M/2A	178.0	246.0	-	-	133.5	466	-	408	421	574	536-549
		1672.3	1.7	37096	1.3				151.3	209.1	-	-	113.5						
		1387.4	2.0	30776	1.5				151.3	209.1	-	-	113.5						
		1258.4	2.2	27915	1.3				151.3	209.1	-	-	113.5						
		1151.0	2.4	25532	1.7				151.3	209.1	-	-	113.5						
		1061.8	2.6	23554	1.9				138.0	190.7	-	-	103.5						
		952.6	2.9	21131	2.1				138.0	190.7	-	-	103.5						
		878.7	3.2	19492	2.2				138.0	190.7	-	-	103.5						
		789.4	3.5	17511	2.4				129.1	178.4	-	-	96.8						
	PL 35004	677.7	1.3	46770	0.8	17.0	11.9	160M/6B	144.0	204.0	-	-	108.0	380	-	344	352	443	516-529
		583.5	1.5	40269	0.9				122.4	173.4	-	-	91.8						
		496.0	1.8	34230	1.2				122.4	173.4	-	-	91.8						
		437.1	2.1	30166	1.3				122.4	173.4	-	-	91.8						
		379.6	2.4	26197	1.4				122.4	173.4	-	-	91.8						
		362.7	2.5	25031	1.5				122.4	173.4	-	-	91.8						
		328.5	2.7	22671	1.6				111.6	158.1	-	-	83.7						
		303.1	3.0	20918	1.7				111.6	158.1	-	-	83.7						
		277.5	3.2	19151	1.9				111.6	158.1	-	-	83.7						
		251.4	3.6	17350	2.0				104.4	147.9	-	-	78.3						
		230.3	3.9	15894	2.2				104.4	147.9	-	-	78.3						
		208.6	4.3	14396	2.4				104.4	147.9	-	-	78.3						
		191.0	4.7	13181	2.5				97.2	137.7	-	-	72.9						
	PL 35004	1067.3	1.3	47351	0.8	17.0	11.9	132M/4C	144.0	204.0	-	-	108.0	338	-	302	310	401	516-529
		987.0	1.4	43789	0.8				144.0	204.0	-	-	108.0						
		816.8	1.7	36238	0.9				122.4	173.4	-	-	91.8						
		762.5	1.8	33829	1.0				122.4	173.4	-	-	91.8						
		703.4	2.0	31207	1.1				122.4	173.4	-	-	91.8						
		677.7	2.1	30067	1.1				122.4	173.4	-	-	91.8						
		583.5	2.4	25887	1.2				122.4	173.4	-	-	91.8						
		496.0	2.8	22005	1.7				111.6	158.1	-	-	83.7						
		437.1	3.2	19392	1.9				111.6	158.1	-	-	83.7						
		379.6	3.7	16841	2.1				104.4	147.9	-	-	78.3						
		362.7	3.9	16091	2.1				104.4	147.9	-	-	78.3						
		328.5	4.3	14574	2.3				104.4	147.9	-	-	78.3						
		303.1	4.6	13447	2.5				97.2	137.7	-	-	72.9						
		277.5	5.0	12311	2.7				97.2	137.7	-	-	72.9						
		251.4	5.6	11153	2.9				86.4	122.4	-	-	64.8						
	PL 35004	1289.7	2.2	28609	1.1	17.0	11.9	132M/2A	122.4	173.4	-	-	91.8	334	-	298	306	397	516-529
		1067.3	2.6	23676	1.3				111.6	158.1	-	-	83.7						
		987.0	2.8	21894	1.4				111.6	158.1	-	-	83.7						
		816.8	3.4	18119	1.7				111.6	158.1	-	-	83.7						
		762.5	3.7	16914	1.7				104.4	147.9	-	-	78.3						
		703.4	4.0	15603	1.9				104.4	147.9	-	-	78.3						
		677.7	4.1	15033	1.9				104.4	147.9	-	-	78.3						
		583.5	4.8	12944	2.2				97.2	137.7	-	-	72.9						
		496.0	5.6	11003	2.9				86.4	122.4	-	-	64.8						

P1 (kW)		iges	n2 (rpm)	M2 (Nm)	fs	Pt (20°C) (kW)	Pt (40°C) (kW)	Motor IE2	FR (kN)					~ Kg					mm
									MC	MS	PC	PS	CPC	M...	P...	F	FS	CPC	
7.50	PL 30004	623.7	1.4	43043	0.8	17.0	11.9	160M/6B	90.0	137.0	-	-	67.5	374	-	333	341	437	496-509
		576.0	1.6	39752	0.8				76.5	116.5	-	-	57.4						
		517.4	1.7	35707	0.9				76.5	116.5	-	-	57.4						
		477.3	1.9	32940	1.0				76.5	116.5	-	-	57.4						
		427.1	2.1	29475	1.1				76.5	116.5	-	-	57.4						
		396.0	2.3	27329	1.1				76.5	116.5	-	-	57.4						
		379.6	2.4	26197	1.2				76.5	116.5	-	-	57.4						
		362.7	2.5	25031	1.2				76.5	116.5	-	-	57.4						
		328.5	2.7	22671	1.3				69.8	106.2	-	-	52.3						
		314.9	2.9	21732	1.4				69.8	106.2	-	-	52.3						
		300.9	3.0	20766	1.4				69.8	106.2	-	-	52.3						
		251.4	3.6	17350	1.6				65.3	99.3	-	-	48.9						
	PL 30004	838.9	1.7	37218	0.9	17.0	11.9	132M/4C	76.5	116.5	-	-	57.4	332	-	291	299	395	496-509
		752.6	1.9	33390	1.0				76.5	116.5	-	-	57.4						
		694.3	2.0	30803	1.0				76.5	116.5	-	-	57.4						
		623.7	2.2	27671	1.1				76.5	116.5	-	-	57.4						
		576.0	2.4	25555	1.2				76.5	116.5	-	-	57.4						
		517.4	2.7	22955	1.3				69.8	106.2	-	-	52.3						
		477.3	2.9	21176	1.4				69.8	106.2	-	-	52.3						
		427.1	3.3	18949	1.5				69.8	106.2	-	-	52.3						
		396.0	3.5	17569	1.6				65.3	99.3	-	-	48.9						
		379.6	3.7	16841	1.7				65.3	99.3	-	-	48.9						
		362.7	3.9	16091	1.8				65.3	99.3	-	-	48.9						
		328.5	4.3	14574	1.9				65.3	99.3	-	-	48.9						
		314.9	4.4	13971	2.0				65.3	99.3	-	-	48.9						
		300.9	4.7	13350	2.1				60.8	92.5	-	-	45.6						
		251.4	5.6	11153	2.4				54.0	82.2	-	-	40.5						
	PL 30004	1425.1	2.0	31613	0.8	17.0	11.9	132M/2A	76.5	116.5	-	-	57.4	328	-	287	295	391	496-509
		1015.5	2.8	22527	1.0				69.8	106.2	-	-	52.3						
		838.9	3.3	18609	1.6				69.8	106.2	-	-	52.3						
		752.6	3.7	16695	1.7				65.3	99.3	-	-	48.9						
		694.3	4.0	15402	1.8				65.3	99.3	-	-	48.9						
		623.7	4.5	13835	2.0				65.3	99.3	-	-	48.9						
		576.0	4.9	12777	2.1				60.8	92.5	-	-	45.6						
		517.4	5.4	11477	2.3				60.8	92.5	-	-	45.6						
		477.3	5.9	10588	2.5				54.0	82.2	-	-	40.5						
		427.1	6.6	9474	2.7				51.8	78.8	-	-	38.8						
		396.0	7.1	8784	2.9				51.8	78.8	-	-	38.8						
		379.6	7.4	8421	3.0				51.8	78.8	-	-	38.8						
	PL 25004	617.8	1.5	42636	0.8	15.0	10.5	160M/6B	90.0	137.0	-	-	67.5	341	-	305	313	402	476-489
		556.9	1.6	38433	0.9				76.5	116.5	-	-	57.4						
		493.2	1.8	34037	0.9				76.5	116.5	-	-	57.4						
		455.5	2.0	31435	1.0				76.5	116.5	-	-	57.4						
		424.3	2.1	29282	1.1				76.5	116.5	-	-	57.4						
		408.4	2.2	28185	1.1				76.5	116.5	-	-	57.4						
		374.0	2.4	25811	1.2				76.5	116.5	-	-	57.4						
		338.8	2.7	23382	1.3				69.8	106.2	-	-	52.3						
	PL 25004	697.5	2.0	30945	1.0	15.0	10.5	132M/4C	76.5	116.5	-	-	57.4	299	-	263	271	360	476-489
		617.8	2.3	27409	1.1				76.5	116.5	-	-	57.4						
		556.9	2.5	24707	1.2				69.8	106.2	-	-	52.3						
		493.2	2.8	21881	1.4				69.8	106.2	-	-	52.3						
		455.5	3.1	20209	1.5				69.8	106.2	-	-	52.3						
		424.3	3.3	18824	1.6				69.8	106.2	-	-	52.3						
		408.4	3.4	18119	1.6				69.8	106.2	-	-	52.3						
		374.0	3.7	16593	1.7				65.3	99.3	-	-	48.9						
		338.8	4.1	15031	1.9				65.3	99.3	-	-	48.9						
	PL 25004	1476.0	1.9	32742	0.8	15.0	10.5	132M/2A	76.5	116.5	-	-	57.4	295	-	259	267	356	476-489
		1272.4	2.2	28225	0.9				76.5	116.5	-	-	57.4						
		1126.9	2.5	24998	1.0				76.5	116.5	-	-	57.4						
		1013.4	2.8	22480	1.0				69.8	106.2	-	-	52.3						
		934.9	3.0	20739	1.1				69.8	106.2	-	-	52.3						
		873.6	3.2	19379	1.2				69.8	106.2	-	-	52.3						
		803.1	3.5	17815	1.2				69.8	106.2	-	-	52.3						
		752.3	3.7	16688	1.3				65.3	99.3	-	-	48.9						
		697.5	4.0	15472	1.8				65.3	99.3	-	-	48.9						
		617.8	4.5	13705	2.0				60.8	92.5	-	-	45.6						
		556.9	5.0	12354	2.2				60.8	92.5	-	-	45.6						
		493.2	5.7	10941	2.4				54.0	82.2	-	-	40.5						
		455.5	6.1	10104	2.6				54.0	82.2	-	-	40.5						
		424.3	6.6	9412	2.8				51.8	78.8	-	-	38.8						
		408.4	6.9	9059	2.9				51.8	78.8	-	-	38.8						

P1 (kW)		iges	n2 (rpm)	M2 (Nm)	fs	Pt (20°C) (kW)	Pt (40°C) (kW)	Motor IE2	FR (kN) MC	MS	PC	PS	CPC	~ Kg M…	P…	F	FS	CPC	mm
7.50	PL 18004	489.2	2.9	21704	0.8	13.0	9.1	132M/4C	46.5	82.2	108.5	144.2	34.9	220	247	189	225	270	452-469
		438.4	3.2	19450	0.9				46.5	82.2	108.5	144.2	34.9						
		377.2	3.7	16735	1.0				43.5	76.9	101.5	134.9	32.6						
		348.6	4.0	15466	1.1				43.5	76.9	101.5	134.9	32.6						
	PL 18004	849.8	3.3	18851	0.8	13.0	9.1	132M/2A	46.5	82.2	108.5	144.2	34.9	216	243	185	221	266	452-469
		818.8	3.4	18163	0.9				46.5	82.2	108.5	144.2	34.9						
		770.5	3.6	17092	1.0				43.5	76.9	101.5	134.9	32.6						
		720.0	3.9	15972	1.0				43.5	76.9	101.5	134.9	32.6						
		677.9	4.1	15038	1.1				43.5	76.9	101.5	134.9	32.6						
		620.0	4.5	13753	1.2				40.5	71.6	94.5	125.6	30.4						
		549.1	5.1	12181	1.3				40.5	71.6	94.5	125.6	30.4						
		489.2	5.7	10852	1.4				36.0	63.6	84.0	111.6	27.0						
		438.4	6.4	9725	1.6				36.0	63.6	84.0	111.6	27.0						
		377.2	7.4	8367	1.8				34.5	61.0	80.5	107.0	25.9						
		348.6	8.0	7733	1.9				33.0	58.3	77.0	102.3	24.8						
	PL 16004	507.7	2.8	22524	0.8	11.0	7.7	132M/4C	46.5	82.2	108.5	144.2	34.9	206	233	175	211	256	428-445
		459.9	3.0	20404	0.9				46.5	82.2	108.5	144.2	34.9						
		440.9	3.2	19561	0.8				46.5	82.2	108.5	144.2	34.9						
		421.2	3.3	18687	0.9				46.5	82.2	108.5	144.2	34.9						
		388.6	3.6	17240	1.0				43.5	76.9	101.5	134.9	32.6						
		352.0	4.0	15617	1.1				43.5	76.9	101.5	134.9	32.6						
	PL 16004	640.5	4.4	14208	1.0	11.0	7.7	132M/2A	43.5	76.9	101.5	134.9	32.6	202	229	171	207	252	428-445
		612.0	4.6	13576	1.0				40.5	71.6	94.5	125.6	30.4						
		576.1	4.9	12779	0.8				40.5	71.6	94.5	125.6	30.4						
		554.4	5.1	12298	1.3				40.5	71.6	94.5	125.6	30.4						
		531.4	5.3	11788	1.2				40.5	71.6	94.5	125.6	30.4						
		507.7	5.5	11262	1.4				36.0	63.6	84.0	111.6	27.0						
		459.9	6.1	10202	1.5				36.0	63.6	84.0	111.6	27.0						
		440.9	6.4	9780	1.4				36.0	63.6	84.0	111.6	27.0						
		421.2	6.6	9343	1.6				34.5	61.0	80.5	107.0	25.9						
		388.6	7.2	8620	1.7				34.5	61.0	80.5	107.0	25.9						
		352.0	8.0	7808	1.9				33.0	58.3	77.0	102.3	24.8						
	PL 10004	554.4	5.1	12298	0.9	11.0	7.7	132M/2A	43.9	64.1	-	-	32.9	194	-	161	199	244	410-421
		531.4	5.3	11788	0.8				43.9	64.1	-	-	32.9						
		507.7	5.5	11262	0.9				39.0	57.0	-	-	29.3						
		459.9	6.1	10202	1.0				39.0	57.0	-	-	29.3						
		440.9	6.4	9780	0.9				39.0	57.0	-	-	29.3						
		421.2	6.6	9343	1.1				37.4	54.6	-	-	28.0						
		388.6	7.2	8620	1.2				37.4	54.6	-	-	28.0						
		352.0	8.0	7808	1.3				35.8	52.3	-	-	26.8						
	PL 7004	332.4	8.4	7374	0.8	8.0	5.6	132M/2A	-	-	63.3	75.9	47.4	-	157	139	160	174	392-403
		301.1	9.3	6679	0.8				-	-	60.4	72.5	45.3						
	PL 50003	293.6	3.1	20997	1.6	25.0	17.5	160M/6B	138.0	190.7	-	-	103.5	504	-	446	459	608	536-549
		247.7	3.6	17715	2.3				129.1	178.4	-	-	96.8						
		205.5	4.4	14697	2.7				129.1	178.4	-	-	96.8						
		138.6	6.5	9912	3.0				106.8	147.6	-	-	80.1						
	PL 50003	293.6	4.8	13498	2.3	25.0	17.5	132M/4C	120.2	166.1	-	-	90.1	462	-	404	417	566	536-549
	PL 35003	230.3	3.9	16470	1.8	23.0	16.1	160M/6B	104.4	147.9	-	-	78.3	372	-	336	344	435	516-529
		191.1	4.7	13667	2.1				97.2	137.7	-	-	72.9						
		164.1	5.5	11736	2.4				97.2	137.7	-	-	72.9						
		158.1	5.7	11307	2.5				86.4	122.4	-	-	64.8						
		136.2	6.6	9740	2.8				82.8	117.3	-	-	62.1						
		121.1	7.4	8661	3.0				82.8	117.3	-	-	62.1						
	PL 35003	230.3	6.1	10588	2.6	23.0	16.1	132M/4C	86.4	122.4	-	-	64.8	330	-	294	302	393	516-529
		191.1	7.3	8786	3.0				82.8	117.3	-	-	62.1						
	PL 30003	134.4	6.7	9612	2.7	23.0	16.1	160M/6B	51.8	78.8	-	-	38.8	366	-	325	333	429	496-509
		124.3	7.2	8889	2.9				51.8	78.8			38.8						
	PL 25003	317.2	2.8	22685	0.8	20.0	14.0	160M/6B	69.8	106.2	-	-	52.3	335	-	299	307	396	476-489
		262.8	3.4	18794	0.9				69.8	106.2	-	-	52.3						
		226.6	4.0	16206	1.0				65.3	99.3	-	-	48.9						
		218.7	4.1	15641	1.4				65.3	99.3	-	-	48.9						
		188.5	4.8	13481	1.6				60.8	92.5	-	-	45.6						
		167.0	5.4	11943	1.7				60.8	92.5	-	-	45.6						
		156.0	5.8	11157	1.9				54.0	82.2	-	-	40.5						
		134.3	6.7	9605	2.1				51.8	78.8	-	-	38.8						
		128.4	7.0	9183	2.8				51.8	78.8	-	-	38.8						
		114.4	7.9	8181	2.4				49.5	75.4	-	-	37.1						
		95.0	9.5	6794	2.8				47.3	71.9	-	-	35.4						

P1 (kW)		iges	n2 (rpm)	M2 (Nm)	fs	Pt (20°C) (kW)	Pt (40°C) (kW)	Motor IE2	FR (kN)					~ Kg					mm
									MC	MS	PC	PS	CPC	M...	P...	F	FS	CPC	
7.50	PL 25003	317.2	4.4	14583	1.1	20.0	14.0	132M/4C	65.3	99.3	-	-	48.9	293	-	257	265	354	476-489
		262.8	5.3	12082	1.3				60.8	92.5	-	-	45.6						
		226.6	6.2	10418	1.5				54.0	82.2	-	-	40.5						
		218.7	6.4	10055	2.0				54.0	82.2	-	-	40.5						
		188.5	7.4	8666	2.3				49.5	75.4	-	-	37.1						
		167.0	8.4	7678	2.5				49.5	75.4	-	-	37.1						
		156.0	9.0	7172	2.6				47.3	71.9	-	-	35.4						
		134.3	10.4	6174	3.0				45.0	68.5	-	-	33.8						
	PL 25003	317.2	8.8	7292	2.0	20.0	14.0	132M/2A	47.3	71.9	-	-	35.4	289	-	253	261	350	476-489
		262.8	10.7	6041	2.4				45.0	68.5	-	-	33.8						
		226.6	12.4	5209	2.7				45.0	68.5	-	-	33.8						
	PL 18003	180.2	5.0	12887	1.1	17.0	11.9	160M/6B	40.5	71.6	94.5	125.6	30.4	255	282	224	260	305	452-469
		149.1	6.0	10663	1.3				36.0	63.6	84.0	111.6	27.0						
		128.4	7.0	9183	1.4				34.5	61.0	80.5	107.0	25.9						
		106.7	8.4	7631	1.9				33.0	58.3	77.0	102.3	24.8						
		94.5	9.5	6758	2.1				30.0	53.0	70.0	93.0	22.5						
		81.4	11.1	5821	2.4				30.0	53.0	70.0	93.0	22.5						
		73.3	12.3	5242	2.6				30.0	53.0	70.0	93.0	22.5						
		65.0	13.8	4649	2.9				28.2	49.8	65.8	87.4	21.2						
	PL 18003	180.2	7.8	8285	1.6	17.0	11.9	132M/4C	33.0	58.3	77.0	102.3	24.8	213	240	182	218	263	452-469
		149.1	9.4	6855	1.8				31.5	55.7	73.5	97.7	23.6						
		128.4	10.9	5903	2.1				30.0	53.0	70.0	93.0	22.5						
		106.7	13.1	4905	2.8				29.1	51.4	67.9	90.2	21.8						
	PL 18003	180.2	15.5	4142	2.8	17.0	11.9	132M/2A	28.2	49.8	65.8	87.4	21.2	209	236	178	214	259	452-469
	PL 16003	195.3	4.6	13967	0.8	15.0	10.5	160M/6B	40.5	71.6	94.5	125.6	30.4	242	269	210	247	292	428-445
		188.2	4.8	13459	0.8				40.5	71.6	94.5	125.6	30.4						
		155.9	5.8	11149	0.9				36.0	63.6	84.0	111.6	27.0						
		144.0	6.3	10298	1.0				36.0	63.6	84.0	111.6	27.0						
		129.4	7.0	9254	1.1				34.5	61.0	80.5	107.0	25.9						
		124.0	7.3	8868	1.5				34.5	61.0	80.5	107.0	25.9						
		118.5	7.6	8475	1.2				33.0	58.3	77.0	102.3	24.8						
		109.3	8.2	7817	1.6				33.0	58.3	77.0	102.3	24.8						
		94.9	9.5	6787	1.8				31.5	55.7	73.5	97.7	23.6						
		82.1	11.0	5871	2.4				30.0	53.0	70.0	93.0	22.5						
		75.2	12.0	5378	2.6				30.0	53.0	70.0	93.0	22.5						
		62.9	14.3	4498	3.0				28.2	49.8	65.8	87.4	21.2						
	PL 16003	274.1	5.1	12602	0.8	15.0	10.5	132M/4C	40.5	71.6	94.5	125.6	30.4	200	227	168	205	250	428-445
		226.8	6.2	10427	1.0				36.0	63.6	84.0	111.6	27.0						
		209.7	6.7	9641	0.8				34.5	61.0	80.5	107.0	25.9						
		195.3	7.2	8979	1.1				34.5	61.0	80.5	107.0	25.9						
		188.2	7.4	8652	1.1				34.5	61.0	80.5	107.0	25.9						
		155.9	9.0	7167	1.3				31.5	55.7	73.5	97.7	23.6						
		144.0	9.7	6620	1.4				30.0	53.0	70.0	93.0	22.5						
		129.4	10.8	5949	1.6				30.0	53.0	70.0	93.0	22.5						
		124.0	11.3	5701	2.1				30.0	53.0	70.0	93.0	22.5						
		118.5	11.8	5448	1.7				30.0	53.0	70.0	93.0	22.5						
		109.3	12.8	5025	2.4				29.1	51.4	67.9	90.2	21.8						
		94.9	14.8	4363	2.7				28.2	49.8	65.8	87.4	21.2						
	PL 16003	330.3	8.5	7593	1.0	15.0	10.5	132M/2A	33.0	58.3	77.0	102.3	24.8	196	223	164	201	246	428-445
		274.1	10.2	6301	1.5				30.0	53.0	70.0	93.0	22.5						
		235.4	11.9	5411	1.3				30.0	53.0	70.0	93.0	22.5						
		226.8	12.3	5214	1.8				30.0	53.0	70.0	93.0	22.5						
		209.7	13.4	4820	1.4				28.2	49.8	65.8	87.4	21.2						
		195.3	14.3	4489	2.0				28.2	49.8	65.8	87.4	21.2						
		188.2	14.9	4326	2.1				28.2	49.8	65.8	87.4	21.2						
		155.9	18.0	3584	2.4				24.9	44.0	58.1	77.2	18.7						
		144.0	19.4	3310	2.5				24.9	44.0	58.1	77.2	18.7						
		129.4	21.6	2975	2.8				24.9	44.0	58.1	77.2	18.7						
		118.5	23.6	2724	3.0				23.4	41.3	54.6	72.5	17.6						
	PL 10003	144.0	6.3	10298	0.9	15.0	10.5	160M/6B	39.0	57.0	-	-	29.3	234	-	201	239	284	410-421
		124.0	7.3	8868	1.0				37.4	54.6	-	-	28.0						
		118.5	7.6	8475	0.8				35.8	52.3	-	-	26.8						
		109.3	8.2	7817	1.1				35.8	52.3	-	-	26.8						
		94.9	9.5	6787	1.2				34.1	49.9	-	-	25.6						
		82.1	11.0	5871	1.6				32.5	47.5	-	-	24.4						
		75.2	12.0	5378	1.7				32.5	47.5	-	-	24.4						
		62.9	14.3	4498	2.0				30.6	44.7	-	-	22.9						
		57.6	15.6	4119	2.2				30.6	44.7	-	-	22.9						

P1 (kW)		iges	n2 (rpm)	M2 (Nm)	fs	Pt (20°C) (kW)	Pt (40°C) (kW)	Motor IE2	FR (kN)					~ Kg					mm
									MC	MS	PC	PS	CPC	M...	P...	F	FS	CPC	
7.50		195.3	7.2	8979	0.8				37.4	54.6	-	-	28.0						
		188.2	7.4	8652	0.8				37.4	54.6	-	-	28.0						
		173.6	8.1	7981	1.1				35.8	52.3	-	-	26.8						
		155.9	9.0	7167	0.9				34.1	49.9	-	-	25.6						
		144.0	9.7	6620	1.3				32.5	47.5	-	-	24.4						
		129.4	10.8	5949	1.1				32.5	47.5	-	-	24.4						
	PL 10003	124.0	11.3	5701	1.4	15.0	10.5	132M/4C	32.5	47.5	-	-	24.4	192	-	159	197	242	410-421
		118.5	11.8	5448	1.1				32.5	47.5	-	-	24.4						
		109.3	12.8	5025	1.6				31.5	46.1	-	-	23.6						
		94.9	14.8	4363	1.8				30.6	44.7	-	-	22.9						
		82.1	17.1	3775	2.3				28.9	42.3	-	-	21.7						
		75.2	18.6	3457	2.5				28.9	42.3	-	-	21.7						
		62.9	22.3	2892	2.9				26.0	38.0	-	-	19.5						
		274.1	10.2	6301	1.0				32.5	47.5	-	-	24.4						
		235.4	11.9	5411	0.9				32.5	47.5	-	-	24.4						
		226.8	12.3	5214	1.2				32.5	47.5	-	-	24.4						
		209.7	13.4	4820	1.0				30.6	44.7	-	-	22.9						
		195.3	14.3	4489	1.4				30.6	44.7	-	-	22.9						
		188.2	14.9	4326	1.4				30.6	44.7	-	-	22.9						
	PL 10003	173.6	16.1	3991	1.9	15.0	10.5	132M/2A	30.6	44.7	-	-	22.9	188	-	155	193	238	410-421
		155.9	18.0	3584	1.6				27.0	39.4	-	-	20.2						
		144.0	19.4	3310	2.2				27.0	39.4	-	-	20.2						
		129.4	21.6	2975	1.9				27.0	39.4	-	-	20.2						
		124.0	22.6	2850	2.5				25.4	37.1	-	-	19.0						
		118.5	23.6	2724	2.0				25.4	37.1	-	-	19.0						
		109.3	25.6	2513	2.8				25.4	37.1	-	-	19.0						
		102.1	8.8	7302	0.8				-	-	60.4	72.5	45.3						
		93.7	9.6	6701	0.8				-	-	57.5	69.0	43.1						
	PL 7003	78.3	11.5	5600	0.9	14.0	9.8	160M/6B	-	-	57.5	69.0	43.1	-	197	179	200	214	392-403
		71.7	12.6	5128	1.0				-	-	54.1	64.9	40.5						
		64.8	13.9	4634	1.1				-	-	54.1	64.9	40.5						
		53.8	16.7	3848	1.3				-	-	54.1	64.9	40.5						
		127.9	10.9	5880	0.9				-	-	57.5	69.0	43.1						
		112.9	12.4	5191	0.9				-	-	55.8	66.9	41.8						
		102.1	13.7	4694	1.1				-	-	55.8	66.9	41.8						
		93.7	14.9	4308	1.1				-	-	54.1	64.9	40.5						
	PL 7003	88.4	15.8	4064	1.0	14.0	9.8	132M/4C	-	-	54.1	64.9	40.5	-	155	137	158	172	392-403
		78.3	17.9	3600	1.3				-	-	51.2	61.4	38.4						
		71.7	19.5	3296	1.4				-	-	47.7	57.3	35.8						
		64.8	21.6	2979	1.6				-	-	47.7	57.3	35.8						
		53.8	26.0	2473	1.9				-	-	44.9	53.8	33.6						
		244.7	11.4	5625	0.8				-	-	57.5	69.0	43.1						
		216.7	12.9	4981	1.0				-	-	54.1	64.9	40.5						
		194.9	14.4	4480	0.8				-	-	54.1	64.9	40.5						
		174.4	16.1	4009	1.0				-	-	54.1	64.9	40.5						
		155.4	18.0	3572	1.1				-	-	47.7	57.3	35.8						
		148.8	18.8	3421	1.3				-	-	47.7	57.3	35.8						
		139.2	20.1	3200	1.2				-	-	47.7	57.3	35.8						
	PL 7003	127.9	21.9	2940	1.6	14.0	9.8	132M/2A	-	-	47.7	57.3	35.8	-	151	133	154	168	392-403
		112.9	24.8	2595	1.7				-	-	44.9	53.8	33.6						
		102.1	27.4	2347	2.0				-	-	44.9	53.8	33.6						
		93.7	29.9	2154	1.9				-	-	42.6	51.1	31.9						
		88.4	31.7	2032	1.8				-	-	42.6	51.1	31.9						
		78.3	35.8	1800	2.3				-	-	40.3	48.3	30.2						
		71.7	39.1	1648	2.4				-	-	38.5	46.2	28.9						
		64.8	43.2	1490	2.9				-	-	37.4	44.9	28.0						
		99.0	14.1	4551	0.8				16.5	21.2	29.6	34.3	22.2						
		90.7	15.4	4170	0.9				16.5	21.2	29.6	34.3	22.2						
		82.1	17.1	3775	0.9				15.6	20.0	28.0	32.5	21.0						
	PL 5003	75.2	18.6	3457	1.0	10.0	7.0	132M/4C	15.6	20.0	28.0	32.5	21.0	117	126	108	119	130	370-385
		62.9	22.3	2892	1.1				14.0	18.0	25.2	29.2	18.9						
		57.6	24.3	2648	1.3				13.7	17.6	24.6	28.5	18.4						
		52.1	26.9	2395	1.3				13.3	17.1	23.9	27.7	18.0						
		62.9	14.3	4498	0.8				16.5	21.2	29.6	34.3	22.2						
	PL 5003	57.6	15.6	4119	0.9	10.0	7.0	160M/6B	16.5	21.2	29.6	34.3	22.2	159	168	150	161	172	370-385
		52.1	17.3	3726	0.9				16.5	21.2	29.6	34.3	22.2						

P1 (kW)		iges	n2 (rpm)	M2 (Nm)	fs	Pt (20°C) (kW)	Pt (40°C) (kW)	Motor IE2	FR (kN)					~ Kg					mm
									MC	MS	PC	PS	CPC	M...	P...	F	FS	CPC	
7.50	PL 5003	155.9	18.0	3584	0.9	10.0	7.0	132M/2A	14.5	18.7	26.1	30.3	19.6	113	122	104	115	126	370-385
		149.5	18.7	3437	0.8				14.5	18.7	26.1	30.3	19.6						
		129.4	21.6	2975	1.1				14.5	18.7	26.1	30.3	19.6						
		119.3	23.5	2742	1.2				13.7	17.6	24.6	28.5	18.4						
		99.0	28.3	2276	1.4				13.0	16.7	23.3	27.0	17.5						
		90.7	30.9	2085	1.6				13.0	16.7	23.3	27.0	17.5						
		82.1	34.1	1887	1.6				12.3	15.8	22.1	25.6	16.5						
		75.2	37.2	1729	1.9				12.3	15.8	22.1	25.6	16.5						
		62.9	44.5	1446	2.0				11.4	14.6	20.5	23.7	15.4						
		57.6	48.6	1324	2.3				11.2	14.4	20.2	23.4	15.1						
		52.1	53.7	1198	2.3				10.9	14.0	19.5	22.6	14.6						
	PL 2503	62.9	22.3	2892	0.8	8.0	5.6	132M/4C	14.0	18.0	25.2	29.2	18.9	111	120	102	113	124	348-363
		57.6	24.3	2648	0.9				13.7	17.6	24.6	28.5	18.4						
		52.1	26.9	2395	0.9				13.3	17.1	23.9	27.7	18.0						
	PL 2503	119.3	23.5	2742	0.8	8.0	5.6	132M/2A	13.7	17.6	24.6	28.5	18.4	107	116	98	109	120	348-363
		99.0	28.3	2276	0.9				13.0	16.7	23.3	27.0	17.5						
		90.7	30.9	2085	1.1				13.0	16.7	23.3	27.0	17.5						
		82.1	34.1	1887	1.1				12.3	15.8	22.1	25.6	16.5						
		75.2	37.2	1729	1.3				12.3	15.8	22.1	25.6	16.5						
		62.9	44.5	1446	1.3				11.4	14.6	20.5	23.7	15.4						
		57.6	48.6	1324	1.6				11.2	14.4	20.2	23.4	15.1						
		52.1	53.7	1198	1.6				10.9	14.0	19.5	22.6	14.6						
	PL 1603*	54.2	51.7	1246	0.8	5.0	3.5	132M/2A	3.5	4.3	7.7	9.6	5.8	93	95	91	94	98	326-340
	PL 16002	48.9	18.4	3624	1.8	23.0	16.1	160M/6B	24.9	44.0	58.1	77.2	18.7	234	261	202	239	284	428-445
		40.5	22.2	3001	2.1				24.9	44.0	58.1	77.2	18.7						
	PL 16002	48.9	28.6	2330	2.6	23.0	16.1	132M/4C	22.8	40.3	53.2	70.7	17.1	192	219	160	197	242	428-445
		40.5	34.6	1930	3.0				11.1	19.6	25.9	34.4	8.3						
	PL 10002	48.9	18.4	3624	1.2	23.0	16.1	160M/6B	27.0	39.4	-	-	20.2	226	-	193	231	276	410-421
		40.5	22.2	3001	1.4				27.0	39.4	-	-	20.2						
		33.6	26.8	2490	2.2				25.4	37.1	-	-	19.0						
		28.9	31.1	2142	2.5				24.1	35.2	-	-	18.0						
	PL 10002	48.9	28.6	2330	1.8	23.0	16.1	132M/4C	24.1	35.2	-	-	18.0	184	-	151	189	234	410-421
		40.5	34.6	1930	2.1				22.8	33.3	-	-	17.1						
	PL 7002	42.1	21.4	3120	1.1	18.0	12.6	160M/6B	-	-	47.7	57.3	35.8	-	191	173	194	207	392-403
		36.3	24.8	2690	1.4				-	-	44.9	53.8	33.6						
		30.0	30.0	2223	1.7				-	-	42.6	51.1	31.9						
		26.6	33.8	1971	2.1				-	-	40.3	48.3	30.2						
		22.9	39.3	1697	2.4				-	-	38.5	46.2	28.9						
		20.6	43.7	1527	2.3				-	-	37.4	44.9	28.0						
		18.3	49.2	1356	2.8				-	-	36.8	44.2	27.6						
	PL 7002	50.8	27.6	2420	1.1	18.0	12.6	132M/4C	-	-	43.7	52.4	32.8	-	149	131	152	165	392-403
		42.1	33.3	2006	1.5				-	-	41.4	49.7	31.1						
		36.3	38.6	1729	2.0				-	-	38.5	46.2	29.5						
		30.0	46.7	1429	2.4				-	-	37.4	44.9	28.0						
		26.6	52.6	1267	3.0				-	-	36.2	43.5	27.6						
	PL 7002	50.8	55.1	1210	1.9	18.0	12.6	132M/2A	-	-	35.7	42.8	26.7	-	145	127	148	161	392-403
		42.1	66.5	1003	2.7				-	-	33.4	40.0	25.0						
	PL 5002	40.5	22.2	3001	0.8	15.0	10.5	160M/6B	14.5	18.7	26.1	30.3	19.6	153	162	144	155	166	370-385
		34.9	25.8	2586	1.0				13.7	17.6	24.6	28.5	18.4						
		28.9	31.1	2142	1.2				13.0	16.7	23.3	27.0	17.5						
		23.1	39.0	1712	1.7				11.7	15.1	21.1	24.5	15.8						
		18.4	48.9	1364	1.7				11.2	14.4	20.2	23.4	15.1						
		16.2	55.6	1201	2.5				10.9	14.0	19.5	22.6	14.6						
		13.4	67.2	993	2.9				10.2	13.1	18.3	21.2	13.7						
	PL 5002	40.5	34.6	1930	1.1	15.0	10.5	132M/4C	12.3	15.8	22.1	25.6	16.5	111	120	102	113	124	370-385
		34.9	40.1	1663	1.4				11.7	15.1	21.1	24.5	15.8						
		28.9	48.4	1377	1.7				11.2	14.4	20.2	23.4	15.1						
		23.1	60.6	1101	2.4				10.3	13.3	18.6	21.5	13.9						
		18.4	76.1	877	2.4				9.8	12.6	17.6	20.4	13.2						
	PL 5002	48.9	57.3	1165	1.3	15.0	10.5	132M/2A	10.9	14.0	19.5	22.6	14.6	107	116	98	109	120	370-385
		40.5	69.1	965	1.9				10.0	12.8	18.0	20.8	13.5						
		34.9	80.2	831	2.5				9.5	12.2	17.0	19.7	12.8						
		28.9	96.9	688	3.0				9.0	11.6	16.2	18.8	12.2						
	PL 2502	28.9	31.1	2142	0.8	12.0	8.4	160M/6B	13.0	16.7	23.3	27.0	17.5	147	156	139	149	160	348-363
		23.1	39.0	1712	1.2				11.7	15.1	21.1	24.5	15.8						
		18.4	48.9	1364	1.2				11.2	14.4	20.2	23.4	15.1						
		16.2	55.6	1201	1.7				10.9	14.0	19.5	22.6	14.6						
		13.4	67.2	993	2.0				10.2	13.1	18.3	21.2	13.7						

* Soğutucu gereklidir / Cooling is required / Kühlung ist erforderlich / È richiesto raffreddamento / Le refroidissement est nécessaire / Se requiere un enfriamiento

P1 (kW)		iges	n2 (rpm)	M2 (Nm)	fs	Pt (20°C) (kW)	Pt (40°C) (kW)	Motor IE2	FR (kN)					~ Kg					mm
									MC	MS	PC	PS	CPC	M...	P...	F	FS	CPC	
7.50	PL 2502	34.9	40.1	1663	1.0	12.0	8.4	132M/4C	11.7	15.1	21.1	24.5	15.8	105	114	97	107	118	348-363
		28.9	48.4	1377	1.2				11.2	14.4	20.2	23.4	15.1						
		23.1	60.6	1101	1.7				10.3	13.3	18.6	21.5	13.9						
		18.4	76.1	877	1.7				9.8	12.6	17.6	20.4	13.2						
		16.2	86.4	772	2.5				9.3	11.9	16.7	19.3	12.5						
		13.4	104.5	638	2.9				8.9	11.5	16.1	18.6	12.0						
	PL 2502	48.9	57.3	1165	0.9	12.0	8.4	132M/2A	10.9	14.0	19.5	22.6	14.6	101	110	93	103	114	348-363
		40.5	69.1	965	1.3				10.0	12.8	18.0	20.8	13.5						
		34.9	80.2	831	1.8				9.5	12.2	17.0	19.7	12.8						
		28.9	96.9	688	2.1				9.0	11.6	16.2	18.8	12.2						
		23.1	121.2	550	3.0				8.5	10.9	15.3	17.7	11.5						
		18.4	152.2	438	3.0				7.8	10.0	14.0	16.2	10.5						
	PL 1602	24.0	58.3	1143	0.9	8.0	5.6	132M/4C	3.2	4.0	7.1	8.9	5.3	91	93	89	92	96	326-340
		19.9	70.4	948	1.0				3.1	3.8	6.8	8.6	5.1						
		15.2	92.1	724	1.3				2.9	3.5	6.2	7.8	4.7						
		12.6	111.1	600	1.5				2.7	3.3	5.9	7.4	4.5						
	PL 1602	15.2	59.2	1126	0.9	8.0	5.6	160M/6B	3.2	4.0	7.1	8.9	5.3	133	135	131	134	138	326-340
		12.6	71.4	934	1.0				3.1	3.8	6.8	8.6	5.1						
	PL 1602	31.4	89.2	748	0.9	8.0	5.6	132M/2A	2.9	3.5	6.2	7.8	4.7	87	89	85	88	92	326-340
		28.9	96.9	688	1.3				2.8	3.5	6.2	7.7	4.6						
		24.0	116.7	572	1.5				2.7	3.3	5.8	7.3	4.4						
		19.9	140.7	474	1.8				2.5	3.1	5.5	6.9	4.1						
		15.2	184.2	362	2.2				2.3	2.9	5.1	6.4	3.8						
		12.6	222.2	300	2.6				2.2	2.7	4.9	6.1	3.6						
	PL 1002	15.2	92.1	724	0.8	8.0	5.6	132M/4C	2.9	3.5	6.2	7.8	4.7	89	91	87	90	94	304-318
		12.6	111.1	600	1.0				2.7	3.3	5.9	7.4	4.5						
	PL 1002	28.9	96.9	688	0.9	8.0	5.6	132M/2A	2.8	3.5	6.2	7.7	4.6	85	87	83	86	90	304-318
		24.0	116.7	572	1.0				2.7	3.3	5.8	7.3	4.4						
		19.9	140.7	474	1.1				2.5	3.1	5.5	6.9	4.1						
		15.2	184.2	362	1.4				2.3	2.9	5.1	6.4	3.8						
		12.6	222.2	300	1.7				2.2	2.7	4.9	6.1	3.6						
	PL 5001	7.25	124.1	557	2.4	20.0	14.0	160M/6B	8.5	10.9	15.3	17.7	11.5	145	154	137	147	158	370-385
	PL 2501	7.25	124.1	557	1.6	20.0	14.0	160M/6B	8.5	10.9	15.3	17.7	11.5	141	150	132	143	154	348-363
		6.00	150.0	461	2.4				8.1	10.4	14.5	16.8	10.9						
	PL 2501	7.25	193.1	358	2.3	20.0	14.0	132M/4C	7.4	9.5	13.2	15.3	9.9	99	108	90	101	112	348-363
	PL 1601	6.75	133.3	518	1.0	12.0	8.4	160M/6B	2.5	3.1	5.5	6.9	4.1	127	129	125	128	132	326-340
		5.60	160.7	430	1.4				2.4	3.0	5.3	6.7	4.0						
		4.29	209.8	329	2.4				2.3	2.8	5.0	6.2	3.7						
		3.56	252.8	273	2.8				2.1	2.6	4.6	5.8	3.5						
	PL 1601	6.75	207.4	333	1.4	12.0	8.4	132M/4C	2.3	2.8	4.9	6.2	3.7	85	87	83	86	90	326-340
		5.60	250.0	276	2.0				2.1	2.6	4.7	5.9	3.5						
	PL 1601	6.75	414.8	167	2.4	12.0	8.4	132M/2A	1.8	2.3	4.0	5.0	3.0	81	83	79	82	86	326-340
	PL 1001	5.60	160.7	430	0.9	12.0	8.4	160M/6B	2.4	3.0	5.3	6.7	4.0	125	127	123	126	130	304-318
		4.29	209.8	329	1.5				2.3	2.8	5.0	6.2	3.7						
		3.56	252.8	273	1.8				2.1	2.6	4.6	5.8	3.5						
	PL 1001	6.75	207.4	333	1.0	12.0	8.4	132M/4C	2.3	2.8	4.9	6.2	3.7	83	85	81	84	88	304-318
		5.60	250.0	276	1.3				2.1	2.6	4.7	5.9	3.5						
		4.29	326.3	212	2.2				2.0	2.5	4.4	5.5	3.3						
		3.56	393.3	176	2.6				1.9	2.3	4.1	5.1	3.1						
	PL 1001	8.67	323.0	214	0.9	12.0	8.4	132M/2A	2.0	2.5	4.4	5.5	3.3	79	81	77	80	84	304-318
		6.75	414.8	167	1.7				1.8	2.3	4.0	5.0	3.0						
		5.60	500.0	138	2.3				1.8	2.2	3.8	4.8	2.9						
9.20	PL 90004	1623.2	0.9	88337	1.1	30.0	21.0	132M/4	310.0	432.0	-	-	232.5	750	-	654	676	924	576-585
		1345.0	1.0	73197	1.3				310.0	432.0	-	-	232.5						
		1119.0	1.3	60898	1.5				310.0	432.0	-	-	232.5						
		926.1	1.5	50400	1.7				263.5	367.2	-	-	197.6						
		854.4	1.6	46498	1.8				263.5	367.2	-	-	197.6						
		798.3	1.8	43445	1.9				263.5	367.2	-	-	197.6						
		742.1	1.9	40386	2.0				263.5	367.2	-	-	197.6						
		687.5	2.0	37415	2.2				263.5	367.2	-	-	197.6						
		630.8	2.2	34329	2.9				263.5	367.2	-	-	197.6						
		585.4	2.4	31858	2.5				263.5	367.2	-	-	197.6						
		543.9	2.6	29600	2.6				240.3	334.8	-	-	180.2						
		504.1	2.8	27434	2.8				240.3	334.8	-	-	180.2						

P1 (kW)		iges	n2 (rpm)	M2 (Nm)	fs	Pt (20°C) (kW)	Pt (40°C) (kW)	Motor IE2	FR (kN)					~ Kg					mm
									MC	MS	PC	PS	CPC	M...	P...	F	FS	CPC	
9.20	PL 65004	1008.1	1.4	54863	1.4	25.0	17.5	132M/4	156.0	216.0	-	-	117.0	562	-	504	518	670	556-569
		838.8	1.7	45649	1.6				132.6	183.6	-	-	99.5						
		694.2	2.0	37780	1.9				132.6	183.6	-	-	99.5						
		640.4	2.2	34852	2.0				132.6	183.6	-	-	99.5						
		556.2	2.5	30269	2.3				120.9	167.4	-	-	90.7						
		515.3	2.7	28044	2.4				120.9	167.4	-	-	90.7						
		456.4	3.1	24838	2.7				120.9	167.4	-	-	90.7						
		407.7	3.4	22188	2.9				120.9	167.4	-	-	90.7						
	PL 50004	1151.0	1.2	62639	0.8	20.0	14.0	132M/4	178.0	246.0	-	-	133.5	470	-	412	425	578	556-569
		1061.8	1.3	57785	0.9				178.0	246.0	-	-	133.5						
		952.6	1.5	51842	0.9				178.0	246.0	-	-	133.5						
		878.7	1.6	47820	1.0				151.3	209.1	-	-	113.5						
		789.4	1.8	42961	1.1				151.3	209.1	-	-	113.5						
		686.4	2.0	37355	1.7				151.3	209.1	-	-	113.5						
		616.6	2.3	33556	1.8				151.3	209.1	-	-	113.5						
		591.0	2.4	32163	1.9				151.3	209.1	-	-	113.5						
		564.7	2.5	30732	2.0				151.3	209.1	-	-	113.5						
		511.6	2.7	27842	2.1				138.0	190.7	-	-	103.5						
		471.9	3.0	25682	2.3				138.0	190.7	-	-	103.5						
		432.2	3.2	23521	2.5				138.0	190.7	-	-	103.5						
		391.5	3.6	21306	2.6				129.1	178.4	-	-	96.8						
		358.5	3.9	19510	2.9				129.1	178.4	-	-	96.8						
	PL 35004	816.8	1.7	44452	0.8	17.0	11.9	132M/4	122.4	173.4	-	-	91.8	338	-	302	310	401	516-529
		762.5	1.8	41497	0.8				122.4	173.4	-	-	91.8						
		703.4	2.0	38280	0.9				122.4	173.4	-	-	91.8						
		677.7	2.1	36882	0.9				122.4	173.4	-	-	91.8						
		583.5	2.4	31755	1.0				122.4	173.4	-	-	91.8						
		496.0	2.8	26993	1.4				111.6	158.1	-	-	83.7						
		437.1	3.2	23788	1.5				111.6	158.1	-	-	83.7						
		379.6	3.7	20658	1.7				104.4	147.9	-	-	78.3						
		362.7	3.9	19739	1.7				104.4	147.9	-	-	78.3						
		328.5	4.3	17878	1.9				104.4	147.9	-	-	78.3						
		303.1	4.6	16495	2.0				97.2	137.7	-	-	72.9						
		277.5	5.0	15102	2.2				97.2	137.7	-	-	72.9						
		251.4	5.6	13682	2.4				86.4	122.4	-	-	64.8						
		230.3	6.1	12533	2.6				86.4	122.4	-	-	64.8						
		208.6	6.7	11352	2.8				82.8	117.3	-	-	62.1						
		191.0	7.3	10395	3.0				82.8	117.3	-	-	62.1						
	PL 30004	752.6	1.9	40958	0.8	17.0	11.9	132M/4	76.5	116.5	-	-	57.4	332	-	291	299	395	496-509
		694.3	2.0	37785	0.8				76.5	116.5	-	-	57.4						
		623.7	2.2	33943	0.9				76.5	116.5	-	-	57.4						
		576.0	2.4	31347	1.0				76.5	116.5	-	-	57.4						
		517.4	2.7	28158	1.1				69.8	106.2	-	-	52.3						
		477.3	2.9	25975	1.2				69.8	106.2	-	-	52.3						
		427.1	3.3	23244	1.3				69.8	106.2	-	-	52.3						
		396.0	3.5	21551	1.3				65.3	99.3	-	-	48.9						
		379.6	3.7	20658	1.4				65.3	99.3	-	-	48.9						
		362.7	3.9	19739	1.4				65.3	99.3	-	-	48.9						
		328.5	4.3	17878	1.6				65.3	99.3	-	-	48.9						
		314.9	4.4	17137	1.6				65.3	99.3	-	-	48.9						
		300.9	4.7	16376	1.7				60.8	92.5	-	-	45.6						
		251.4	5.6	13682	1.9				54.0	82.2	-	-	40.5						
	PL 25004	697.5	2.0	37959	0.8	15.0	10.5	132M/4	76.5	116.5	-	-	57.4	299	-	263	271	360	476-489
		617.8	2.3	33622	0.9				76.5	116.5	-	-	57.4						
		556.9	2.5	30307	1.0				69.8	106.2	-	-	52.3						
		493.2	2.8	26841	1.1				69.8	106.2	-	-	52.3						
		455.5	3.1	24789	1.2				69.8	106.2	-	-	52.3						
		424.3	3.3	23091	1.3				69.8	106.2	-	-	52.3						
		408.4	3.4	22226	1.3				69.8	106.2	-	-	52.3						
		374.0	3.7	20354	1.4				65.3	99.3	-	-	48.9						
		338.8	4.1	18438	1.5				65.3	99.3	-	-	48.9						
	PL 18004	377.2	3.7	20528	0.8	13.0	9.1	132M/4	43.5	76.9	101.5	134.9	32.6	220	247	189	225	270	452-469
		348.6	4.0	18971	0.9				43.5	76.9	101.5	134.9	32.6						
	PL 16004	388.6	3.6	21148	0.8	11.0	7.7	132M/4	43.5	76.9	101.5	134.9	32.6	206	233	175	211	256	428-445
		352.0	4.0	19156	0.9				43.5	76.9	101.5	134.9	32.6						
	PL 50003	293.6	4.8	16558	1.9	25.0	17.5	132M/4	120.2	166.1	-	-	90.1	462	-	404	417	566	536-549
		247.7	5.7	13969	2.7				106.8	147.6	-	-	80.1						
	PL 35003	230.3	6.1	12988	2.1	23.0	16.1	132M/4	86.4	122.4	-	-	64.8	330	-	294	302	393	516-529
		191.1	7.3	10777	2.5				82.8	117.3	-	-	62.1						
		164.1	8.5	9255	2.8				75.6	107.1	-	-	56.7						
		158.1	8.9	8916	2.9				75.6	107.1	-	-	56.7						

P1 (kW)		iges	n2 (rpm)	M2 (Nm)	fs	Pt (20°C) (kW)	Pt (40°C) (kW)	Motor IE2	FR (kN)					~ Kg					mm
									MC	MS	PC	PS	CPC	M...	P...	F	FS	CPC	
9.20	PL 25003	317.2	4.4	17889	0.9	20.0	14.0	132M/4	65.3	99.3	-	-	48.9	293	-	257	265	354	476-489
		262.8	5.3	14821	1.1				60.8	92.5	-	-	45.6						
		226.6	6.2	12779	1.2				54.0	82.2	-	-	40.5						
		218.7	6.4	12334	1.6				54.0	82.2	-	-	40.5						
		188.5	7.4	10631	1.8				49.5	75.4	-	-	37.1						
		167.0	8.4	9418	2.0				49.5	75.4	-	-	37.1						
		156.0	9.0	8798	2.2				47.3	71.9	-	-	35.4						
		134.3	10.4	7574	2.5				45.0	68.5	-	-	33.8						
		114.4	12.2	6452	2.8				43.7	66.4	-	-	32.7						
	PL 18003	180.2	7.8	10162	1.3	17.0	11.9	132M/4	33.0	58.3	77.0	102.3	24.8	213	240	182	218	263	452-469
		149.1	9.4	8409	1.5				31.5	55.7	73.5	97.7	23.6						
		128.4	10.9	7241	1.7				30.0	53.0	70.0	93.0	22.5						
		106.7	13.1	6017	2.3				29.1	51.4	67.9	90.2	21.8						
		94.5	14.8	5329	2.5				28.2	49.8	65.8	87.4	21.2						
		81.4	17.2	4591	2.8				26.7	47.2	62.3	82.8	20.0						
	PL 16003	226.8	6.2	12791	0.8	15.0	10.5	132M/4	36.0	63.6	84.0	111.6	27.0	200	227	168	205	250	428-445
		195.3	7.2	11014	0.9				34.5	61.0	80.5	107.0	25.9						
		188.2	7.4	10614	0.9				34.5	61.0	80.5	107.0	25.9						
		155.9	9.0	8792	1.1				31.5	55.7	73.5	97.7	23.6						
		144.0	9.7	8121	1.2				30.0	53.0	70.0	93.0	22.5						
		129.4	10.8	7298	1.3				30.0	53.0	70.0	93.0	22.5						
		124.0	11.3	6993	1.7				30.0	53.0	70.0	93.0	22.5						
		118.5	11.8	6683	1.4				30.0	53.0	70.0	93.0	22.5						
		109.3	12.8	6164	1.9				29.1	51.4	67.9	90.2	21.8						
		94.9	14.8	5352	2.2				28.2	49.8	65.8	87.4	21.2						
		82.1	17.1	4630	2.8				26.7	47.2	62.3	82.8	20.0						
		75.2	18.6	4241	3.0				26.7	47.2	62.3	82.8	20.0						
	PL 10003	173.6	8.1	9790	0.9	15.0	10.5	132M/4	35.8	52.3	-	-	26.8	192	-	159	197	242	428-445
		144.0	9.7	8121	1.0				32.5	47.5	-	-	24.4						
		129.4	10.8	7298	0.9				32.5	47.5	-	-	24.4						
		124.0	11.3	6993	1.2				32.5	47.5	-	-	24.4						
		118.5	11.8	6683	0.9				32.5	47.5	-	-	24.4						
		109.3	12.8	6164	1.3				31.5	46.1	-	-	23.6						
		94.9	14.8	5352	1.5				30.6	44.7	-	-	22.9						
		82.1	17.1	4630	1.9				28.9	42.3	-	-	21.7						
		75.2	18.6	4241	2.0				28.9	42.3	-	-	21.7						
		62.9	22.3	3547	2.4				26.0	38.0	-	-	19.5						
		57.6	24.3	3248	2.5				25.4	37.1	-	-	19.0						
	PL 7003	127.9	10.9	7213	0.8	14.0	9.8	132M/4	-	-	57.5	69.0	43.1	-	155	137	158	172	392-403
		112.9	12.4	6367	0.8				-	-	55.8	66.9	41.8						
		102.1	13.7	5758	0.9				-	-	55.8	66.9	41.8						
		93.7	14.9	5284	0.9				-	-	54.1	64.9	40.5						
		88.4	15.8	4985	0.8				-	-	54.1	64.9	40.5						
		78.3	17.9	4416	1.0				-	-	51.2	61.4	38.4						
		71.7	19.5	4044	1.1				-	-	47.7	57.3	35.8						
		64.8	21.6	3654	1.3				-	-	47.7	57.3	35.8						
		53.8	26.0	3034	1.5				-	-	44.9	53.8	33.6						
	PL 5003	75.2	18.6	4241	0.9	10.0	7.0	132M/4	15.6	20.0	28.0	32.5	21.0	117	126	108	119	130	370-385
		62.9	22.3	3547	0.9				14.0	18.0	25.2	29.2	18.9						
		57.6	24.3	3248	1.1				13.7	17.6	24.6	28.5	18.4						
		52.1	26.9	2938	1.1				13.3	17.1	23.9	27.7	18.0						
	PL 16002	48.9	28.6	2858	2.1	23.0	16.1	132M/4	22.8	40.3	53.2	70.7	17.1	192	219	160	197	242	428-445
		40.5	34.6	2367	2.5				11.1	19.6	25.9	34.4	8.3						
	PL 10002	48.9	28.6	2858	1.4	23.0	16.1	132M/4	24.1	35.2	-	-	18.0	184	-	151	189	234	410-421
		40.5	34.6	2367	1.7				22.8	33.3	-	-	17.1						
		33.6	41.7	1964	2.6				21.8	31.8	-	-	16.3						
		28.9	48.4	1689	2.9				20.8	30.4	-	-	15.6						
	PL 7002	50.8	27.6	2969	0.9	18.0	12.6	132M/4	-	-	43.7	52.4	32.8	-	149	131	152	165	392-400
		42.1	33.3	2460	1.2				-	-	41.4	49.7	31.1						
		36.3	38.6	2121	1.7				-	-	38.5	46.2	29.5						
		30.0	46.7	1753	1.9				-	-	37.4	44.9	28.0						
		26.6	52.6	1555	2.4				-	-	36.2	43.5	27.6						
		22.9	61.1	1338	2.8				-	-	33.9	40.7	25.4						
		20.6	68.0	1204	2.6				-	-	32.8	39.3	24.6						
	PL 5002	40.5	34.6	2367	0.9	15.0	10.5	132M/4	12.3	15.8	22.1	25.6	16.5	111	120	102	113	124	370-385
		34.9	40.1	2040	1.2				11.7	15.1	21.1	24.5	15.8						
		28.9	48.4	1689	1.4				11.2	14.4	20.2	23.4	15.1						
		23.1	60.6	1350	2.0				10.3	13.3	18.6	21.5	13.9						
		18.4	76.1	1075	2.0				9.8	12.6	17.6	20.4	13.2						
		16.2	86.4	947	2.9				9.3	11.9	16.7	19.3	12.5						

P1 (kW)		iges	n2 (rpm)	M2 (Nm)	fs	Pt (20°C) (kW)	Pt (40°C) (kW)	Motor IE2	FR (kN)					~ Kg					mm
									MC	MS	PC	PS	CPC	M...	P...	F	FS	CPC	
9.20	PL 2502	34.9	40.1	2040	0.8	12.0	8.4	132M/4	11.7	15.1	21.1	24.5	15.8	105	114	97	107	118	348-363
		28.9	48.4	1689	0.9				11.2	14.4	20.2	23.4	15.1						
		23.1	60.6	1350	1.4				10.3	13.3	18.6	21.5	13.9						
		18.4	76.1	1075	1.4				9.8	12.6	17.6	20.4	13.2						
		16.2	86.4	947	2.0				9.3	11.9	16.7	19.3	12.5						
		13.4	104.5	783	2.4				8.9	11.5	16.1	18.6	12.0						
	PL 1602*	19.9	70.4	1163	0.8	8.0	5.6	132M/4	3.1	3.8	6.8	8.6	5.1	91	93	89	92	96	326-340
		15.2	92.1	888	1.0				2.9	3.5	6.2	7.8	4.7						
		12.6	111.1	736	1.2				2.7	3.3	5.9	7.4	4.5						
	PL 1002*	12.6	111.1	736	0.8	8.0	5.6	132M/4	2.7	3.3	5.9	7.4	4.5	89	91	87	90	94	304-318
	PL 5001	7.25	193.1	439	2.8	20.0	14.0	132M/4	7.4	9.5	13.2	15.3	9.9	103	112	95	105	116	370-385
	PL 2501	7.25	193.1	439	1.8	20.0	14.0	132M/4	7.4	9.5	13.2	15.3	9.9	99	108	90	101	112	348-363
		6.00	233.3	363	2.8				7.0	9.0	12.6	14.6	9.5						
	PL 1601	6.75	207.4	409	1.1	12.0	8.4	132M/4	2.3	2.8	4.9	6.2	3.7	85	87	83	86	90	326-340
		5.60	250.0	339	1.6				2.1	2.6	4.7	5.9	3.5						
		4.29	326.3	260	2.8				2.0	2.5	4.4	5.5	3.3						
	PL 1001	6.75	207.4	409	0.8	12.0	8.4	132M/4	2.3	2.8	4.9	6.2	3.7	83	85	81	84	88	304-318
		5.60	250.0	339	1.1				2.1	2.6	4.7	5.9	3.5						
		4.29	326.3	260	1.8				2.0	2.5	4.4	5.5	3.3						
		3.56	393.3	216	2.1				1.9	2.3	4.1	5.1	3.1						
11.00	PL 90004	1119.0	0.8	113264	0.9	30.0	21.0	160L/6B	310.0	432.0	-	-	232.5	802	-	706	728	976	576-585
		926.1	1.0	93739	1.0				310.0	432.0	-	-	232.5						
		854.4	1.1	86482	1.1				310.0	432.0	-	-	232.5						
		798.3	1.1	80803	1.1				310.0	432.0	-	-	232.5						
		742.1	1.2	75115	1.2				310.0	432.0	-	-	232.5						
		687.5	1.3	69588	1.3				310.0	432.0	-	-	232.5						
		630.8	1.4	63849	1.7				310.0	432.0	-	-	232.5						
		585.4	1.5	59254	1.4				263.5	367.2	-	-	197.6						
		543.9	1.7	55053	1.5				263.5	367.2	-	-	197.6						
		504.1	1.8	51025	1.6				263.5	367.2	-	-	197.6						
		462.6	1.9	46824	2.2				263.5	367.2	-	-	197.6						
		429.7	2.1	43494	2.3				263.5	367.2	-	-	197.6						
		398.3	2.3	40316	2.5				263.5	367.2	-	-	197.6						
		355.8	2.5	36014	2.7				240.3	334.8	-	-	180.2						
	PL 90004	1623.2	0.9	105621	0.9	30.0	21.0	160M/4B	310.0	432.0	-	-	232.5	780	-	684	706	954	576-585
		1345.0	1.0	87518	1.1				310.0	432.0	-	-	232.5						
		1119.0	1.3	72813	1.2				310.0	432.0	-	-	232.5						
		926.1	1.5	60261	1.4				263.5	367.2	-	-	197.6						
		854.4	1.6	55595	1.5				263.5	367.2	-	-	197.6						
		798.3	1.8	51945	1.6				263.5	367.2	-	-	197.6						
		742.1	1.9	48288	1.7				263.5	367.2	-	-	197.6						
		687.5	2.0	44735	1.8				263.5	367.2	-	-	197.6						
		630.8	2.2	41046	2.5				263.5	367.2	-	-	197.6						
		585.4	2.4	38092	2.1				263.5	367.2	-	-	197.6						
		543.9	2.6	35391	2.2				240.3	334.8	-	-	180.2						
		504.1	2.8	32802	2.4				240.3	334.8	-	-	180.2						
	PL 90004	1623.2	1.7	52810	1.6	30.0	21.0	160M/2B	263.5	367.2	-	-	197.6	773	-	677	699	947	576-585
		1345.0	2.1	43759	1.9				263.5	367.2	-	-	197.6						
		1119.0	2.5	36406	2.2				263.5	367.2	-	-	197.6						
		926.1	3.0	30130	2.5				240.3	334.8	-	-	180.2						
		854.4	3.3	27798	2.7				240.3	334.8	-	-	180.2						
		798.3	3.5	25972	2.8				224.8	313.2	-	-	168.6						
		742.1	3.8	24144	3.0				224.8	313.2	-	-	168.6						
	PL 65004	1008.1	0.9	102039	0.8	25.0	17.5	160L/6B	156.0	216.0	-	-	117.0	614	-	556	570	722	556-569
		838.8	1.1	84903	1.0				156.0	216.0	-	-	117.0						
		694.2	1.3	70266	1.1				156.0	216.0	-	-	117.0						
		640.4	1.4	64821	1.2				156.0	216.0	-	-	117.0						
		556.2	1.6	56298	1.3				132.6	183.6	-	-	99.5						
		515.3	1.7	52158	1.4				132.6	183.6	-	-	99.5						
		456.4	2.0	46196	1.6				132.6	183.6	-	-	99.5						
		407.7	2.2	41267	1.7				132.6	183.6	-	-	99.5						
		364.4	2.5	36884	1.9				132.6	183.6	-	-	99.5						
		333.7	2.7	33777	2.0				120.9	167.4	-	-	90.7						
		301.7	3.0	30538	2.2				120.9	167.4	-	-	90.7						
		280.3	3.2	28372	2.3				120.9	167.4	-	-	90.7						
		256.7	3.5	25983	2.5				113.1	156.6	-	-	84.8						
		212.5	4.2	21509	2.9				113.1	156.6	-	-	84.8						

* Soğutucu gereklidir / Cooling is required / Kühlung ist erforderlich / È richiesto raffreddamento / Le refroidissement est nécessaire / Se requiere un enfriamiento

P1 (kW)		iges	n2 (rpm)	M2 (Nm)	fs	Pt (20°C) (kW)	Pt (40°C) (kW)	Motor IE2	FR (kN) MC	MS	PC	PS	CPC	~ Kg M…	P…	F	FS	CPC	mm
11.00	PL 65004	1008.1	1.4	65597	1.2	25.0	17.5	160M/4B	156.0	216.0	-	-	117.0	592	-	534	548	700	556-569
		838.8	1.7	54580	1.4				132.6	183.6	-	-	99.5						
		694.2	2.0	45171	1.6				132.6	183.6	-	-	99.5						
		640.4	2.2	41670	1.7				132.6	183.6	-	-	99.5						
		556.2	2.5	36192	1.9				120.9	167.4	-	-	90.7						
		515.3	2.7	33530	2.0				120.9	167.4	-	-	90.7						
		456.4	3.1	29698	2.2				120.9	167.4	-	-	90.7						
		407.7	3.4	26529	2.5				120.9	167.4	-	-	90.7						
		364.4	3.8	23711	2.7				113.1	156.6	-	-	84.8						
		333.7	4.2	21714	2.9				113.1	156.6	-	-	84.8						
	PL 65004	1008.1	2.8	32798	2.1	25.0	17.5	160M/2B	120.9	167.4	-	-	90.7	585	-	527	541	693	556-569
		838.8	3.3	27290	2.4				120.9	167.4	-	-	90.7						
		694.2	4.0	22586	2.8				113.1	156.6	-	-	84.8						
		640.4	4.4	20835	3.0				113.1	156.6	-	-	84.8						
	PL 50004	686.4	1.3	69477	1.0	20.0	14.0	160L/6B	178.0	246.0	-	-	133.5	522	-	464	477	630	536-549
		616.6	1.5	62412	1.1				178.0	246.0	-	-	133.5						
		591.0	1.5	59821	1.1				151.3	209.1	-	-	113.5						
		564.7	1.6	57158	1.2				151.3	209.1	-	-	113.5						
		511.6	1.8	51784	1.2				151.3	209.1	-	-	113.5						
		471.9	1.9	47765	1.3				151.3	209.1	-	-	113.5						
		432.2	2.1	43747	1.4				151.3	209.1	-	-	113.5						
		391.5	2.3	39627	1.5				151.3	209.1	-	-	113.5						
		358.5	2.5	36287	1.7				138.0	190.7	-	-	103.5						
		324.8	2.8	32876	1.8				138.0	190.7	-	-	103.5						
	PL 50004	952.6	1.5	61985	0.8	20.0	14.0	160M/4B	178.0	246.0	-	-	133.5	500	-	442	455	608	536-549
		878.7	1.6	57177	0.8				151.3	209.1	-	-	113.5						
		789.4	1.8	51366	0.9				151.3	209.1	-	-	113.5						
		686.4	2.0	44664	1.4				151.3	209.1	-	-	113.5						
		616.6	2.3	40122	1.5				151.3	209.1	-	-	113.5						
		591.0	2.4	38456	1.6				151.3	209.1	-	-	113.5						
		564.7	2.5	36745	1.6				151.3	209.1	-	-	113.5						
		511.6	2.7	33290	1.8				138.0	190.7	-	-	103.5						
		471.9	3.0	30706	1.9				138.0	190.7	-	-	103.5						
		432.2	3.2	28123	2.1				138.0	190.7	-	-	103.5						
		391.5	3.6	25475	2.2				129.1	178.4	-	-	96.8						
		358.5	3.9	23327	2.4				129.1	178.4	-	-	96.8						
		324.8	4.3	21135	2.6				129.1	178.4	-	-	96.8						
	PL 50004	1672.3	1.7	54408	0.9	20.0	14.0	160M/2B	151.3	209.1	-	-	113.5	493	-	435	448	601	536-549
		1387.4	2.0	45139	1.0				151.3	209.1	-	-	113.5						
		1258.4	2.2	40942	0.9				151.3	209.1	-	-	113.5						
		1151.0	2.4	37447	1.2				151.3	209.1	-	-	113.5						
		1061.8	2.6	34545	1.3				138.0	190.7	-	-	103.5						
		952.6	2.9	30993	1.4				138.0	190.7	-	-	103.5						
		878.7	3.2	28588	1.5				138.0	190.7	-	-	103.5						
		789.4	3.5	25683	1.6				129.1	178.4	-	-	96.8						
		686.4	4.1	22332	2.5				129.1	178.4	-	-	96.8						
		616.6	4.5	20061	2.7				120.2	166.1	-	-	90.1						
		591.0	4.7	19228	2.8				120.2	166.1	-	-	90.1						
		564.7	5.0	18372	2.9				120.2	166.1	-	-	90.1						
	PL 35004	496.0	1.8	50205	0.8	17.0	11.9	160L/6B	122.4	173.4	-	-	91.8	390	-	354	362	453	516-529
		437.1	2.1	44243	0.9				122.4	173.4	-	-	91.8						
		379.6	2.4	38423	1.0				122.4	173.4	-	-	91.8						
		362.7	2.5	36712	1.0				122.4	173.4	-	-	91.8						
		328.5	2.7	33250	1.1				111.6	158.1	-	-	83.7						
		303.1	3.0	30680	1.2				111.6	158.1	-	-	83.7						
		277.5	3.2	28088	1.3				111.6	158.1	-	-	83.7						
		251.4	3.6	25447	1.4				104.4	147.9	-	-	78.3						
		230.3	3.9	23311	1.5				104.4	147.9	-	-	78.3						
		208.6	4.3	21114	1.6				104.4	147.9	-	-	78.3						
		191.0	4.7	19333	1.7				97.2	137.7	-	-	72.9						
	PL 35004	1289.7	2.2	41960	0.8	17.0	11.9	160M/2B	122.4	173.4	-	-	91.8	361	-	325	333	424	516-529
		1067.3	2.6	34724	0.9				111.6	158.1	-	-	83.7						
		987.0	2.8	32112	1.0				111.6	158.1	-	-	83.7						
		816.8	3.4	26574	1.1				111.6	158.1	-	-	83.7						
		762.5	3.7	24808	1.2				104.4	147.9	-	-	78.3						
		703.4	4.0	22885	1.3				104.4	147.9	-	-	78.3						
		677.7	4.1	22049	1.3				104.4	147.9	-	-	78.3						
		583.5	4.8	18984	1.5				97.2	137.7	-	-	72.9						
		496.0	5.6	16137	2.0				86.4	122.4	-	-	64.8						
		437.1	6.4	14221	2.2				86.4	122.4	-	-	64.8						
		379.6	7.4	12350	2.5				82.8	117.3	-	-	62.1						
		362.7	7.7	11800	2.6				79.2	112.2	-	-	59.4						
		328.5	8.5	10688	2.8				75.6	107.1	-	-	56.7						
		303.1	9.2	9861	3.0				75.6	107.1	-	-	56.7						

P1 (kW)		iges	n2 (rpm)	M2 (Nm)	fs	Pt (20°C) (kW)	Pt (40°C) (kW)	Motor IE2	FR (kN)					~ Kg					mm
									MC	MS	PC	PS	CPC	M...	P...	F	FS	CPC	
11.00	PL 35004	583.5	2.4	37968	0.8	17.0	11.9	160M/4B	122.4	173.4	-	-	91.8	368	-	332	340	431	516-529
		496.0	2.8	32274	1.1				111.6	158.1	-	-	83.7						
		437.1	3.2	28442	1.3				111.6	158.1	-	-	83.7						
		379.6	3.7	24700	1.4				104.4	147.9	-	-	78.3						
		362.7	3.9	23601	1.5				104.4	147.9	-	-	78.3						
		328.5	4.3	21375	1.6				104.4	147.9	-	-	78.3						
		303.1	4.6	19723	1.7				97.2	137.7	-	-	72.9						
		277.5	5.0	18057	1.8				97.2	137.7	-	-	72.9						
		251.4	5.6	16358	2.0				86.4	122.4	-	-	64.8						
		230.3	6.1	14985	2.1				86.4	122.4	-	-	64.8						
		208.6	6.7	13573	2.3				82.8	117.3	-	-	62.1						
		191.0	7.3	12428	2.5				82.8	117.3	-	-	62.1						
	PL 30004	623.7	2.2	40584	0.8	17.0	11.9	160M/4B	76.5	116.5	-	-	57.4	362	-	321	329	425	496-509
		576.0	2.4	37480	0.8				76.5	116.5	-	-	57.4						
		517.4	2.7	33667	0.9				69.8	106.2	-	-	52.3						
		477.3	2.9	31058	1.0				69.8	106.2	-	-	52.3						
		427.1	3.3	27791	1.1				69.8	106.2	-	-	52.3						
		396.0	3.5	25768	1.1				65.3	99.3	-	-	48.9						
		379.6	3.7	24700	1.1				65.3	99.3	-	-	48.9						
		362.7	3.9	23601	1.2				65.3	99.3	-	-	48.9						
		328.5	4.3	21375	1.3				65.3	99.3	-	-	48.9						
		314.9	4.4	20490	1.3				65.3	99.3	-	-	48.9						
		300.9	4.7	19579	1.4				60.8	92.5	-	-	45.6						
		251.4	5.6	16358	1.6				54.0	82.2	-	-	40.5						
	PL 30004	396.0	2.3	40083	0.8	17.0	11.9	160L/6B	76.5	116.5	-	-	57.4	384	-	343	351	447	496-509
		379.6	2.4	38423	0.8				76.5	116.5	-	-	57.4						
		362.7	2.5	36712	0.8				76.5	116.5	-	-	57.4						
		328.5	2.7	33250	0.9				69.8	106.2	-	-	52.3						
		314.9	2.9	31874	0.9				69.8	106.2	-	-	52.3						
		300.9	3.0	30457	1.0				69.8	106.2	-	-	52.3						
		251.4	3.6	25447	1.1				65.3	99.3	-	-	48.9						
	PL 30004	838.9	3.3	27293	1.1	17.0	11.9	160M/2B	69.8	106.2	-	-	52.3	355	-	314	322	418	496-509
		752.6	3.7	24486	1.2				65.3	99.3	-	-	48.9						
		694.3	4.0	22589	1.3				65.3	99.3	-	-	48.9						
		623.7	4.5	20292	1.4				65.3	99.3	-	-	48.9						
		576.0	4.9	18740	1.4				60.8	92.5	-	-	45.6						
		517.4	5.4	16833	1.6				60.8	92.5	-	-	45.6						
		477.3	5.9	15529	1.7				54.0	82.2	-	-	40.5						
		427.1	6.6	13896	1.9				51.8	78.8	-	-	38.8						
		396.0	7.1	12884	2.0				51.8	78.8	-	-	38.8						
		379.6	7.4	12350	2.1				51.8	78.8	-	-	38.8						
		362.7	7.7	11800	2.1				49.5	75.4	-	-	37.1						
		328.5	8.5	10688	2.3				47.3	71.9	-	-	35.4						
		314.9	8.9	10245	2.4				47.3	71.9	-	-	35.4						
		300.9	9.3	9790	2.5				47.3	71.9	-	-	35.4						
		251.4	11.1	8179	2.9				45.0	68.5	-	-	33.8						
	PL 25004	408.4	2.2	41338	0.8	15.0	10.5	160L/6B	76.5	116.5	-	-	57.4	351	-	315	323	412	476-489
		374.0	2.4	37856	0.8				76.5	116.5	-	-	57.4						
		338.8	2.7	34293	0.9				69.8	106.2	-	-	52.3						
	PL 25004	617.8	2.3	40200	0.8	15.0	10.5	160M/4B	76.5	116.5	-	-	57.4	329	-	293	301	390	476-489
		556.9	2.5	36237	0.8				69.8	106.2	-	-	52.3						
		493.2	2.8	32092	0.9				69.8	106.2	-	-	52.3						
		455.5	3.1	29639	1.0				69.8	106.2	-	-	52.3						
		424.3	3.3	27609	1.1				69.8	106.2	-	-	52.3						
		408.4	3.4	26574	1.1				69.8	106.2	-	-	52.3						
		374.0	3.7	24336	1.2				65.3	99.3	-	-	48.9						
		338.8	4.1	22046	1.3				65.3	99.3	-	-	48.9						
	PL 25004	934.9	3.0	30417	0.8	15.0	10.5	160M/2B	69.8	106.2	-	-	52.3	322	-	286	294	383	476-489
		873.6	3.2	28422	0.8				69.8	106.2	-	-	52.3						
		803.1	3.5	26129	0.8				69.8	106.2	-	-	52.3						
		752.3	3.7	24476	0.9				65.3	99.3	-	-	48.9						
		697.5	4.0	22693	1.2				65.3	99.3	-	-	48.9						
		617.8	4.5	20100	1.4				60.8	92.5	-	-	45.6						
		556.9	5.0	18119	1.5				60.8	92.5	-	-	45.6						
		493.2	5.7	16046	1.7				54.0	82.2	-	-	40.5						
		455.5	6.1	14820	1.8				54.0	82.2	-	-	40.5						
		424.3	6.6	13804	1.9				51.8	78.8	-	-	38.8						
		408.4	6.9	13287	1.9				51.8	78.8	-	-	38.8						
		374.0	7.5	12168	2.1				51.8	78.8	-	-	38.8						
		338.8	8.3	11023	2.3				49.5	75.4	-	-	37.1						

P1 (kW)		iges	n2 (rpm)	M2 (Nm)	fs	Pt (20°C) (kW)	Pt (40°C) (kW)	Motor IE2	FR (kN) MC	MS	PC	PS	CPC	~ Kg M…	P…	F	FS	CPC	mm
11.00	PL 18004	620.0	4.5	20172	0.8	13.0	9.1	160M/2B	40.5	71.6	94.5	125.6	30.4	243	270	212	248	293	452-469
		549.1	5.1	17865	0.9				40.5	71.6	94.5	125.6	30.4						
		489.2	5.7	15916	1.0				36.0	63.6	84.0	111.6	27.0						
		438.4	6.4	14263	1.1				36.0	63.6	84.0	111.6	27.0						
		377.2	7.4	12272	1.2				34.5	61.0	80.5	107.0	25.9						
		348.6	8.0	11342	1.3				33.0	58.3	77.0	102.3	24.8						
	PL 16004	554.4	5.1	18037	0.9	11.0	7.7	160M/2B	40.5	71.6	94.5	125.6	30.4	229	256	198	234	279	428-445
		531.4	5.3	17289	0.8				40.5	71.6	94.5	125.6	30.4						
		507.7	5.5	16518	0.9				36.0	63.6	84.0	111.6	27.0						
		459.9	6.1	14963	1.0				36.0	63.6	84.0	111.6	27.0						
		440.9	6.4	14345	0.9				36.0	63.6	84.0	111.6	27.0						
		421.2	6.6	13704	1.1				34.5	61.0	80.5	107.0	25.9						
		388.6	7.2	12643	1.2				34.5	61.0	80.5	107.0	25.9						
		352.0	8.0	11452	1.3				33.0	58.3	77.0	102.3	24.8						
	PL 10004	388.6	7.2	12643	0.8	11.0	7.7	160M/2B	37.4	54.6	-	-	28.0	221	-	188	226	271	410-421
		352.0	8.0	11452	0.9				35.8	52.3	-	-	26.8						
	PL 50003	293.6	3.1	30796	1.1	25.0	17.5	160L/6B	138.0	190.7	-	-	103.5	514	-	456	469	618	536-549
		247.7	3.6	25981	1.6				129.1	178.4	-	-	96.8						
		205.5	4.4	21555	1.9				129.1	178.4	-	-	96.8						
		170.1	5.3	17842	2.2				120.2	166.1	-	-	90.1						
		157.3	5.7	16499	2.4				106.8	147.6	-	-	80.1						
		138.6	6.5	14538	2.1				106.8	147.6	-	-	80.1						
		130.2	6.9	13657	2.7				102.4	141.5	-	-	76.8						
		116.9	7.7	12262	3.0				97.9	135.3	-	-	73.4						
	PL 50003	293.6	4.8	19797	1.6	25.0	17.5	160M/4B	120.2	166.1	-	-	90.1	492	-	434	447	596	536-549
		247.7	5.7	16702	2.3				106.8	147.6	-	-	80.1						
		205.5	6.8	13857	2.7				102.4	141.5	-	-	76.8						
		138.6	10.1	9346	3.0				89.0	123.0	-	-	66.8						
	PL 50003	293.6	9.5	9899	2.9	25.0	17.5	160M/2B	89.0	123.0	-	-	66.8	485	-	427	440	589	536-549
	PL 35003	230.3	3.9	24156	1.2	23.0	16.1	160L/6B	104.4	147.9	-	-	78.3	382	-	346	354	445	516-529
		191.1	4.7	20045	1.4				97.2	137.7	-	-	72.9						
		164.1	5.5	17213	1.6				97.2	137.7	-	-	72.9						
		158.1	5.7	16583	1.7				86.4	122.4	-	-	64.8						
		136.2	6.6	14286	1.9				82.8	117.3	-	-	62.1						
		121.1	7.4	12702	2.1				82.8	117.3	-	-	62.1						
		108.7	8.3	11402	2.3				79.2	112.2	-	-	59.4						
		99.6	9.0	10447	2.4				75.6	107.1	-	-	56.7						
		83.2	10.8	8727	2.9				72.0	102.0	-	-	54.0						
	PL 35003	230.3	6.1	15529	1.8	23.0	16.1	160M/4B	86.4	122.4	-	-	64.8	360	-	324	332	423	516-529
		191.1	7.3	12886	2.1				82.8	117.3	-	-	62.1						
		164.1	8.5	11065	2.3				75.6	107.1	-	-	56.7						
		158.1	8.9	10661	2.4				75.6	107.1	-	-	56.7						
		136.2	10.3	9184	2.7				72.0	102.0	-	-	54.0						
		121.1	11.6	8166	3.0				72.0	102.0	-	-	54.0						
	PL 30003	134.4	6.7	14097	1.8	23.0	16.1	160L/6B	51.8	78.8	-	-	38.8	376	-	335	343	439	496-509
		124.3	7.2	13038	2.0				51.8	78.8	-	-	38.8						
		102.9	8.7	10793	2.3				47.3	71.9	-	-	35.4						
		88.6	10.2	9293	2.6				45.0	68.5	-	-	33.8						
	PL 30003	134.4	10.4	9063	2.7	23.0	16.1	160M/4B	45.0	68.5	-	-	33.8	354	-	313	321	417	496-509
		124.3	11.3	8381	2.8				45.0	68.5	-	-	33.8						
	PL 25003	218.7	4.1	22940	0.9	20.0	14.0	160L/6B	65.3	99.3	-	-	48.9	345	-	309	317	406	476-489
		188.5	4.8	19772	1.1				60.8	92.5	-	-	45.6						
		167.0	5.4	17517	1.2				60.8	92.5	-	-	45.6						
		156.0	5.8	16363	1.3				54.0	82.2	-	-	40.5						
		134.3	6.7	14087	1.4				51.8	78.8	-	-	38.8						
		128.4	7.0	13468	1.9				51.8	78.8	-	-	38.8						
		114.4	7.9	11999	1.6				49.5	75.4	-	-	37.1						
		106.3	8.5	11150	2.2				49.5	75.4	-	-	37.1						
		95.0	9.5	9965	1.9				47.3	71.9	-	-	35.4						
		88.0	10.2	9230	2.6				45.0	68.5	-	-	33.8						
		73.1	12.3	7667	3.0				45.0	68.5	-	-	33.8						
	PL 25003	317.2	4.4	21389	0.8	20.0	14.0	160M/4B	65.3	99.3	-	-	48.9	323	-	287	295	384	476-489
		262.8	5.3	17720	0.9				60.8	92.5	-	-	45.6						
		226.6	6.2	15280	1.0				54.0	82.2	-	-	40.5						
		218.7	6.4	14747	1.4				54.0	82.2	-	-	40.5						
		188.5	7.4	12710	1.5				49.5	75.4	-	-	37.1						
		167.0	8.4	11261	1.7				49.5	75.4	-	-	37.1						
		156.0	9.0	10519	1.8				47.3	71.9	-	-	35.4						
		134.3	10.4	9056	2.1				45.0	68.5	-	-	33.8						
		128.4	10.9	8658	2.8				45.0	68.5	-	-	33.8						
		114.4	12.2	7714	2.4				43.7	66.4	-	-	32.7						
		95.0	14.7	6406	2.7				42.3	64.4	-	-	31.7						

P1 (kW)		iges	n2 (rpm)	M2 (Nm)	fs	Pt (20°C) (kW)	Pt (40°C) (kW)	Motor IE2	FR (kN)					~ Kg					mm
									MC	MS	PC	PS	CPC	M...	P...	F	FS	CPC	
11.00	PL 25003	317.2	8.8	10694	1.4	20.0	14.0	160M/2B	47.3	71.9	-	-	35.4	316	-	280	288	377	476-489
		262.8	10.7	8860	1.6				45.0	68.5	-	-	33.8						
		226.6	12.4	7640	1.8				45.0	68.5	-	-	33.8						
		218.7	12.8	7373	2.4				42.3	64.4	-	-	31.7						
		188.5	14.9	6355	2.8				42.3	64.4	-	-	31.7						
		167.0	16.8	5630	3.0				42.3	64.4	-	-	31.7						
	PL 18003	149.1	6.0	15639	0.9	17.0	11.9	160L/6B	36.0	63.6	84.0	111.6	27.0	265	292	234	270	315	452-469
		128.4	7.0	13468	1.0				34.5	61.0	80.5	107.0	25.9						
		106.7	8.4	11192	1.3				33.0	58.3	77.0	102.3	24.8						
		94.5	9.5	9912	1.4				30.0	53.0	70.0	93.0	22.5						
		81.4	11.1	8538	1.6				30.0	53.0	70.0	93.0	22.5						
		73.3	12.3	7688	1.8				30.0	53.0	70.0	93.0	22.5						
		65.0	13.8	6818	2.0				28.2	49.8	65.8	87.4	21.2						
		53.8	16.7	5643	2.3				28.2	49.8	65.8	87.4	21.2						
	PL 18003	180.2	7.8	12151	1.1	17.0	11.9	160M/4B	33.0	58.3	77.0	102.3	24.8	243	270	212	248	293	452-469
		149.1	9.4	10054	1.2				31.5	55.7	73.5	97.7	23.6						
		128.4	10.9	8658	1.4				30.0	53.0	70.0	93.0	22.5						
		106.7	13.1	7195	1.9				29.1	51.4	67.9	90.2	21.8						
		94.5	14.8	6372	2.1				28.2	49.8	65.8	87.4	21.2						
		81.4	17.2	5489	2.4				26.7	47.2	62.3	82.8	20.0						
		73.3	19.1	4943	2.6				24.9	44.0	58.1	77.2	18.7						
		65.0	21.5	4383	2.8				24.9	44.0	58.1	77.2	18.7						
	PL 18003	180.2	15.5	6075	1.9	17.0	11.9	160M/2B	28.2	49.8	65.8	87.4	21.2	236	263	205	241	286	452-469
		149.1	18.8	5027	2.2				24.9	44.0	58.1	77.2	18.7						
		128.4	21.8	4329	2.5				24.9	44.0	58.1	77.2	18.7						
	PL 16003	195.3	7.2	13169	0.8	15.0	10.5	160M/4B	34.5	61.0	80.5	107.0	25.9	230	257	198	235	280	428-445
		188.2	7.4	12690	0.8				34.5	61.0	80.5	107.0	25.9						
		155.9	9.0	10512	0.9				31.5	55.7	73.5	97.7	23.6						
		144.0	9.7	9710	1.0				30.0	53.0	70.0	93.0	22.5						
		129.4	10.8	8725	1.1				30.0	53.0	70.0	93.0	22.5						
		124.0	11.3	8361	1.5				30.0	53.0	70.0	93.0	22.5						
		118.5	11.8	7990	1.1				30.0	53.0	70.0	93.0	22.5						
		109.3	12.8	7370	1.6				29.1	51.4	67.9	90.2	21.8						
		94.9	14.8	6399	1.8				28.2	49.8	65.8	87.4	21.2						
		82.1	17.1	5536	2.3				26.7	47.2	62.3	82.8	20.0						
		75.2	18.6	5071	2.5				26.7	47.2	62.3	82.8	20.0						
		62.9	22.3	4241	2.9				24.0	42.4	56.0	74.4	18.0						
	PL 16003	124.0	7.3	13006	1.0	15.0	10.5	160L/6B	34.5	61.0	80.5	107.0	25.9	252	279	220	257	302	428-445
		118.5	7.6	12430	0.8				33.0	58.3	77.0	102.3	24.8						
		109.3	8.2	11465	1.1				33.0	58.3	77.0	102.3	24.8						
		94.9	9.5	9954	1.3				31.5	55.7	73.5	97.7	23.6						
		82.1	11.0	8611	1.6				30.0	53.0	70.0	93.0	22.5						
		75.2	12.0	7888	1.7				30.0	53.0	70.0	93.0	22.5						
		62.9	14.3	6598	2.0				28.2	49.8	65.8	87.4	21.2						
		57.6	15.6	6042	2.2				28.2	49.8	65.8	87.4	21.2						
	PL 16003	274.1	10.2	9241	1.0	15.0	10.5	160M/2B	30.0	53.0	70.0	93.0	22.5	223	250	191	228	273	428-445
		235.4	11.9	7936	0.9				30.0	53.0	70.0	93.0	22.5						
		226.8	12.3	7647	1.2				30.0	53.0	70.0	93.0	22.5						
		209.7	13.4	7070	1.0				28.2	49.8	65.8	87.4	21.2						
		195.3	14.3	6584	1.4				28.2	49.8	65.8	87.4	21.2						
		188.2	14.9	6345	1.4				28.2	49.8	65.8	87.4	21.2						
		155.9	18.0	5256	1.6				24.9	44.0	58.1	77.2	18.7						
		144.0	19.4	4855	1.7				24.9	44.0	58.1	77.2	18.7						
		129.4	21.6	4363	1.9				24.9	44.0	58.1	77.2	18.7						
		124.0	22.6	4181	2.5				23.4	41.3	54.6	72.5	17.6						
		118.5	23.6	3995	2.0				23.4	41.3	54.6	72.5	17.6						
		109.3	25.6	3685	2.8				23.4	41.3	54.6	72.5	17.6						
	PL 10003	94.9	9.5	9954	0.8	15.0	10.5	160L/6B	34.1	49.9	-	-	25.6	244	-	211	249	294	410-421
		82.1	11.0	8611	1.1				32.5	47.5	-	-	24.4						
		75.2	12.0	7888	1.2				32.5	47.5	-	-	24.4						
		62.9	14.3	6598	1.4				30.6	44.7	-	-	22.9						
		57.6	15.6	6042	1.5				30.6	44.7	-	-	22.9						
	PL 10003	144.0	9.7	9710	0.9	15.0	10.5	160M/4B	32.5	47.5	-	-	24.4	222	-	189	227	272	410-421
		124.0	11.3	8361	1.0				32.5	47.5	-	-	24.4						
		118.5	11.8	7990	0.8				32.5	47.5	-	-	24.4						
		109.3	12.8	7370	1.1				31.5	46.1	-	-	23.6						
		94.9	14.8	6399	1.2				30.6	44.7	-	-	22.9						
		82.1	17.1	5536	1.6				28.9	42.3	-	-	21.7						
		75.2	18.6	5071	1.7				28.9	42.3	-	-	21.7						
		62.9	22.3	4241	2.0				26.0	38.0	-	-	19.5						
		57.6	24.3	3884	2.1				25.4	37.1	-	-	19.0						

P1 (kW)		iges	n2 (rpm)	M2 (Nm)	fs	Pt (20°C) (kW)	Pt (40°C) (kW)	Motor IE2	FR (kN) MC	MS	PC	PS	CPC	~ Kg M…	P…	F	FS	CPC	mm
11.00	PL 10003	226.8	12.3	7647	0.8	15.0	10.5	160M/2B	32.5	47.5	-	-	24.4	215	-	182	220	265	410-421
		195.3	14.3	6584	0.9				30.6	44.7	-	-	22.9						
		188.2	14.9	6345	1.0				30.6	44.7	-	-	22.9						
		173.6	16.1	5853	1.3				30.6	44.7	-	-	22.9						
		155.9	18.0	5256	1.1				27.0	39.4	-	-	20.2						
		144.0	19.4	4855	1.5				27.0	39.4	-	-	20.2						
		129.4	21.6	4363	1.3				27.0	39.4	-	-	20.2						
		124.0	22.6	4181	1.7				25.4	37.1	-	-	19.0						
		118.5	23.6	3995	1.4				25.4	37.1	-	-	19.0						
		109.3	25.6	3685	1.9				25.4	37.1	-	-	19.0						
		94.9	29.5	3200	2.2				24.1	35.2	-	-	18.0						
		82.1	34.1	2768	2.8				22.8	33.3	-	-	17.1						
		75.2	37.2	2535	3.0				22.8	33.3	-	-	17.1						
	PL 7003	102.1	13.7	6885	0.8	14.0	9.8	160M/4B	-	-	55.8	66.9	41.8	-	185	167	188	202	392-403
		93.7	14.9	6318	0.8				-	-	54.1	64.9	40.5						
		78.3	17.9	5280	0.9				-	-	51.2	61.4	38.4						
		71.7	19.5	4835	0.9				-	-	47.7	57.3	35.8						
		64.8	21.6	4369	1.1				-	-	47.7	57.3	35.8						
		53.8	26.0	3628	1.3				-	-	44.9	53.8	33.6						
	PL 7003	64.8	13.9	6797	0.8	14.0	9.8	160L/6B	-	-	54.1	64.9	40.5	-	207	189	210	224	392-403
		53.8	16.7	5643	0.9						54.1	64.9	40.5						
	PL 7003	155.4	18.0	5239	0.8	14.0	9.8	160M/2B	-	-	47.7	57.3	35.8	-	178	160	181	195	392-403
		148.8	18.8	5017	0.9				-	-	47.7	57.3	35.8						
		139.2	20.1	4693	0.8				-	-	47.7	57.3	35.8						
		127.9	21.9	4312	1.1				-	-	47.7	57.3	35.8						
		112.9	24.8	3806	1.1				-	-	44.9	53.8	33.6						
		102.1	27.4	3442	1.4				-	-	44.9	53.8	33.6						
		93.7	29.9	3159	1.3				-	-	42.6	51.1	31.9						
		88.4	31.7	2980	1.2				-	-	42.6	51.1	31.9						
		78.3	35.8	2640	1.5				-	-	40.3	48.3	30.2						
		71.7	39.1	2417	1.7				-	-	38.5	46.2	28.9						
		64.8	43.2	2185	2.0				-	-	37.4	44.9	28.0						
		53.8	52.0	1814	2.3				-	-	36.8	44.2	27.6						
	PL 5003	62.9	22.3	4241	0.8	10.0	7.0	160M/4B	14.0	18.0	25.2	29.2	18.9	147	156	138	149	160	370-385
		57.6	24.3	3884	0.9				13.7	17.6	24.6	28.5	18.4						
		52.1	26.9	3513	0.9				13.3	17.1	23.9	27.7	18.0						
	PL 5003*	119.3	23.5	4022	0.8	10.0	7.0	160M/2B	13.7	17.6	24.6	28.5	18.4	140	149	131	142	153	370-385
		99.0	28.3	3338	0.9				13.0	16.7	23.3	27.0	17.5						
		90.7	30.9	3058	1.1				13.0	16.7	23.3	27.0	17.5						
		82.1	34.1	2768	1.1				12.3	15.8	22.1	25.6	16.5						
		75.2	37.2	2535	1.3				12.3	15.8	22.1	25.6	16.5						
		62.9	44.5	2121	1.3				11.4	14.6	20.5	23.7	15.4						
		57.6	48.6	1942	1.6				11.2	14.4	20.2	23.4	15.1						
		52.1	53.7	1757	1.6				10.9	14.0	19.5	22.6	14.6						
	PL 2503*	90.7	30.9	3058	0.8	8.0	5.6	160M/2B	13.0	16.7	23.3	27.0	17.5	134	143	125	136	147	348-363
		75.2	37.2	2535	0.9				12.3	15.8	22.1	25.6	16.5						
		62.9	44.5	2121	0.9				11.4	14.6	20.5	23.7	15.4						
		57.6	48.6	1942	1.1				11.2	14.4	20.2	23.4	15.1						
		52.1	53.7	1757	1.1				10.9	14.0	19.5	22.6	14.6						
	PL 25002	43.8	20.5	4761	2.7	30.0	21.0	160L/6B	37.4	56.9	-	-	28.0	333	-	297	305	394	476-489
	PL 16002	48.9	18.4	5315	1.2	23.0	16.1	160L/6B	24.9	44.0	58.1	77.2	18.7	244	271	212	249	294	428-445
		40.5	22.2	4402	1.4				24.9	44.0	58.1	77.2	18.7						
		33.6	26.8	3652	2.2				23.4	41.3	54.6	72.5	17.6						
		28.9	31.1	3141	2.5				22.2	39.2	51.8	68.8	16.7						
	PL 16002	48.9	28.6	3417	1.8	23.0	16.1	160M/4B	22.8	40.3	53.2	70.7	17.1	222	249	190	227	272	428-445
		40.5	34.6	2830	2.1				11.1	19.6	25.9	34.4	8.3						
	PL 10002	48.9	18.4	5315	0.8	23.0	16.1	160L/6B	27.0	39.4	-	-	20.2	236	-	203	241	286	410-421
		40.5	22.2	4402	1.0				27.0	39.4	-	-	20.2						
		33.6	26.8	3652	1.5				25.4	37.1	-	-	19.0						
		28.9	31.1	3141	1.7				24.1	35.2	-	-	18.0						
		25.7	35.0	2793	2.4				22.8	33.3	-	-	17.1						
		22.1	40.7	2402	2.7				21.8	31.8	-	-	16.3						
	PL 10002	48.9	28.6	3417	1.2	23.0	16.1	160M/4B	24.1	35.2	-	-	18.0	214	-	181	219	264	410-421
		40.5	34.6	2830	1.4				22.8	33.3	-	-	17.1						
		33.6	41.7	2348	2.1				21.8	31.8	-	-	16.3						
		28.9	48.4	2019	2.4				20.8	30.4	-	-	15.6						
	PL 10002	48.9	57.3	1708	2.1	23.0	16.1	160M/2B	20.2	29.5	-	-	15.1	207	-	174	212	257	410-421
		40.5	69.1	1415	2.5				18.5	27.1	-	-	13.9						

* Soğutucu gereklidir / Cooling is required / Kühlung ist erforderlich / È richiesto raffreddamento / Le refroidissement est nécessaire / Se requiere un enfriamiento

P1 (kW)		iges	n2 (rpm)	M2 (Nm)	fs	Pt (20°C) (kW)	Pt (40°C) (kW)	Motor IE2	FR (kN) MC	MS	PC	PS	CPC	~ Kg M…	P…	F	FS	CPC	mm
11.00	PL 7002	36.3	24.8	3946	1.0	18.0	12.6	160L/6B	-	-	44.9	53.8	33.6	-	201	183	204	217	392-403
		30.0	30.0	3261	1.1				-	-	42.6	51.1	31.9						
		26.6	33.8	2891	1.4				-	-	40.3	48.3	30.2						
		22.9	39.3	2489	1.6				-	-	38.5	46.2	28.9						
		20.6	43.7	2239	1.5				-	-	37.4	44.9	28.0						
		18.3	49.2	1989	1.9				-	-	36.8	44.2	27.6						
		13.9	64.7	1511	2.7				-	-	33.4	40.0	25.0						
	PL 7002	42.1	33.3	2942	1.0	18.0	12.6	160M/4B	-	-	41.4	49.7	31.1	-	179	161	182	195	392-403
		36.3	38.6	2536	1.4				-	-	38.5	46.2	29.5						
		30.0	46.7	2096	1.6				-	-	37.4	44.9	28.0						
		26.6	52.6	1859	2.0				-	-	36.2	43.5	27.6						
		22.9	61.1	1600	2.3				-	-	33.9	40.7	25.4						
		20.6	68.0	1439	2.2				-	-	32.8	39.3	24.6						
		18.3	76.5	1279	2.8				-	-	32.2	38.6	24.2						
	PL 7002	50.8	55.1	1775	1.3	18.0	12.6	160M/2B	-	-	35.7	42.8	26.7	-	172	154	175	188	392-403
		42.1	66.5	1471	1.9				-	-	33.4	40.0	25.0						
		36.3	77.1	1268	2.5				-	-	32.2	38.6	24.2						
		30.0	93.3	1048	2.9				-	-	29.6	35.5	22.2						
	PL 5002	28.9	31.1	3141	0.8	15.0	10.5	160L/6B	13.0	16.7	23.3	27.0	17.5	163	172	154	165	176	370-385
		23.1	39.0	2511	1.2				11.7	15.1	21.1	24.5	15.8						
		18.4	48.9	2000	1.1				11.2	14.4	20.2	23.4	15.1						
		16.2	55.6	1761	1.7				10.9	14.0	19.5	22.6	14.6						
		13.4	67.2	1457	2.0				10.2	13.1	18.3	21.2	13.7						
	PL 5002	40.5	34.6	2830	0.8	15.0	10.5	160M/4B	12.3	15.8	22.1	25.6	16.5	141	150	132	143	154	370-385
		34.9	40.1	2439	1.0				11.7	15.1	21.1	24.5	15.8						
		28.9	48.4	2019	1.1				11.2	14.4	20.2	23.4	15.1						
		23.1	60.6	1614	1.7				10.3	13.3	18.6	21.5	13.9						
		18.4	76.1	1286	1.6				9.8	12.6	17.6	20.4	13.2						
		16.2	86.4	1132	2.5				9.3	11.9	16.7	19.3	12.5						
		13.4	104.5	936	2.9				8.9	11.5	16.1	18.6	12.0						
	PL 5002	48.9	57.3	1708	0.9	15.0	10.5	160M/2B	10.9	14.0	19.5	22.6	14.6	134	143	125	136	147	370-385
		40.5	69.1	1415	1.3				10.0	12.8	18.0	20.8	13.5						
		34.9	80.2	1219	1.7				9.5	12.2	17.0	19.7	12.8						
		28.9	96.9	1010	2.0				9.0	11.6	16.2	18.8	12.2						
		23.1	121.2	807	2.9				8.5	10.9	15.3	17.7	11.5						
		18.4	152.2	643	2.9				7.8	10.0	14.0	16.2	10.5						
	PL 2502	23.1	39.0	2511	0.8	12.0	8.4	160L/6B	11.7	15.1	21.1	24.5	15.8	157	166	149	159	170	348-363
		18.4	48.9	2000	0.8				11.2	14.4	20.2	23.4	15.1						
		16.2	55.6	1761	1.2				10.9	14.0	19.5	22.6	14.6						
		13.4	67.2	1457	1.4				10.2	13.1	18.3	21.2	13.7						
	PL 2502	28.9	48.4	2019	0.8	12.0	8.4	160M/4B	11.2	14.4	20.2	23.4	15.1	135	144	127	137	148	348-363
		23.1	60.6	1614	1.1				10.3	13.3	18.6	21.5	13.9						
		18.4	76.1	1286	1.1				9.8	12.6	17.6	20.4	13.2						
		16.2	86.4	1132	1.7				9.3	11.9	16.7	19.3	12.5						
		13.4	104.5	936	2.0				8.9	11.5	16.1	18.6	12.0						
	PL 2502	40.5	69.1	1415	0.9	12.0	8.4	160M/2B	10.0	12.8	18.0	20.8	13.5	128	137	120	130	141	348-363
		34.9	80.2	1219	1.2				9.5	12.2	17.0	19.7	12.8						
		28.9	96.9	1010	1.4				9.0	11.6	16.2	18.8	12.2						
		23.1	121.2	807	2.0				8.5	10.9	15.3	17.7	11.5						
		18.4	152.2	643	2.0				7.8	10.0	14.0	16.2	10.5						
		16.2	172.8	566	3.0				7.4	9.6	13.4	15.5	10.0						
	PL 1602*	15.2	92.1	1062	0.9	8.0	5.6	160M/4B	2.9	3.5	6.2	7.8	4.7	121	123	119	122	126	326-340
		12.6	111.1	880	1.0				2.7	3.3	5.9	7.4	4.5						
	PL 1602*	28.9	96.9	1010	0.9	8.0	5.6	160M/2B	2.8	3.5	6.2	7.7	4.6	114	116	112	115	119	326-340
		24.0	116.7	839	1.0				2.7	3.3	5.8	7.3	4.4						
		19.9	140.7	695	1.2				2.5	3.1	5.5	6.9	4.1						
		15.2	184.2	531	1.5				2.3	2.9	5.1	6.4	3.8						
		12.6	222.2	440	1.8				2.2	2.7	4.9	6.1	3.6						
	PL 1002*	19.9	140.7	695	0.8	8.0	5.6	160M/2B	2.5	3.1	5.5	6.9	4.1	112	114	110	113	117	304-318
		15.2	184.2	531	1.0				2.3	2.9	5.1	6.4	3.8						
		12.6	222.2	440	1.1				2.2	2.7	4.9	6.1	3.6						
	PL 10001	8.67	103.8	977	2.4	40.0	28.0	160L/6B	16.6	24.2	-	-	12.4	219	-	187	225	270	410-421
	PL 7001	7.00	128.6	788	2.4	30.0	21.0	160L/6B	-	-	27.9	33.5	20.9	-	189	171	192	205	392-403
	PL 5001	7.25	124.1	817	1.6	20.0	14.0	160L/6B	8.5	10.9	15.3	17.7	11.5	155	164	147	157	168	370-385
		6.00	150.0	676	2.4				8.1	10.4	14.5	16.8	10.9						
	PL 5001	7.25	193.1	525	2.3	20.0	14.0	160M/4B	7.4	9.5	13.2	15.3	9.9	133	142	125	135	146	370-385

* Soğutucu gereklidir / Cooling is required / Kühlung ist erforderlich / È richiesto raffreddamento / Le refroidissement est nécessaire / Se requiere un enfriamiento

P1 (kW)		iges	n2 (rpm)	M2 (Nm)	fs	Pt (20°C) (kW)	Pt (40°C) (kW)	Motor IE2	FR (kN)					~ Kg					mm
									MC	MS	PC	PS	CPC	M...	P...	F	FS	CPC	
11.00	PL 2501	7.25 6.00 5.17	124.1 150.0 174.1	817 676 582	1.1 1.6 2.2	20.0	14.0	160L/6B	8.5 8.1 7.4	10.9 10.4 9.6	15.3 14.5 13.4	17.7 16.8 15.5	11.5 10.9 10.0	151	160	142	153	164	348-363
	PL 2501	7.25 6.00	193.1 233.3	525 434	1.5 2.3	20.0	14.0	160M/4B	7.4 7.0	9.5 9.0	13.2 12.6	15.3 14.6	9.9 9.5	129	138	120	131	142	348-363
	PL 2501	7.25	386.2	262	2.7	20.0	14.0	160M/2B	6.1	7.9	11.0	12.8	8.3	122	131	113	124	135	348-363
	PL 1601	5.60 4.29 3.56	160.7 209.8 252.8	631 483 401	0.9 1.6 1.9	12.0	8.4	160L/6B	2.4 2.3 2.1	3.0 2.8 2.6	5.3 5.0 4.6	6.7 6.2 5.8	4.0 3.7 3.5	137	139	135	138	142	326-340
	PL 1601	6.75 5.60 4.29 3.56	207.4 250.0 326.3 393.3	489 405 311 258	0.9 1.3 2.3 2.7	12.0	8.4	160M/4B	2.3 2.1 2.0 1.9	2.8 2.6 2.5 2.3	4.9 4.7 4.4 4.1	6.2 5.9 5.5 5.1	3.7 3.5 3.3 3.1	115	117	113	116	120	326-340
	PL 1601	6.75 5.60	414.8 500.0	244 203	1.7 2.4	12.0	8.4	160M/2B	1.8 1.8	2.3 2.2	4.0 3.8	5.0 4.8	3.0 2.9	108	110	106	109	113	326-340
	PL 1001	4.29 3.56	209.8 252.8	483 401	1.1 1.2	12.0	8.4	160L/6B	2.3 2.1	2.8 2.6	5.0 4.6	6.2 5.8	3.7 3.5	135	137	133	136	140	304-318
	PL 1001	5.60 4.29 3.56	250.0 326.3 393.3	405 311 258	0.9 1.5 1.8	12.0	8.4	160M/4B	2.1 2.0 1.9	2.6 2.5 2.3	4.7 4.4 4.1	5.9 5.5 5.1	3.5 3.3 3.1	113	115	111	114	118	304-318
	PL 1001	6.75 5.60 4.29	414.8 500.0 652.7	244 203 155	1.2 1.6 2.7	12.0	8.4	160M/2B	1.8 1.8 1.6	2.3 2.2 2.0	4.0 3.8 3.5	5.0 4.8 4.4	3.0 2.9 2.7	106	108	104	107	111	304-318
15.00	PL 90004	1345.0 1119.0 926.1 854.4 798.3 742.1 687.5 630.8 585.4 543.9 504.1 462.6 429.7 398.3 355.8	1.0 1.3 1.5 1.6 1.8 1.9 2.0 2.2 2.4 2.6 2.8 3.0 3.3 3.5 3.9	119343 99290 82174 75812 70834 65847 61003 55972 51943 48261 44729 41047 38128 35342 31571	0.8 0.9 1.0 1.1 1.2 1.2 1.3 1.8 1.5 1.6 1.7 2.3 2.5 2.6 2.9	30.0	21.0	160L/4A	310.0 310.0 263.5 263.5 263.5 263.5 263.5 263.5 263.5 240.3 240.3 240.3 240.3 224.8 224.8	432.0 432.0 367.2 367.2 367.2 367.2 367.2 367.2 367.2 334.8 334.8 334.8 334.8 313.2 313.2	- - - - - - - - - - - - - - -	- - - - - - - - - - - - - - -	232.5 232.5 197.6 197.6 197.6 197.6 197.6 197.6 197.6 180.2 180.2 180.2 180.2 168.6 168.6	795	-	699	721	969	576-585
	PL 90004	854.4 798.3 742.1 687.5 630.8 585.4 543.9 504.1 462.6 429.7 398.3 355.8 306.4 270.6 244.6 224.0	1.1 1.1 1.2 1.3 1.4 1.5 1.7 1.8 1.9 2.1 2.3 2.5 2.9 3.3 3.7 4.0	117930 110186 102429 94893 87067 80801 75072 69579 63851 59310 54976 49110 42291 37350 33761 30918	0.8 0.8 0.9 0.9 1.2 1.1 1.1 1.2 1.6 1.7 1.8 2.0 2.3 2.5 2.7 2.9	30.0	21.0	180L/6A	310.0 310.0 310.0 310.0 310.0 263.5 263.5 263.5 263.5 263.5 263.5 240.3 240.3 240.3 224.8 224.8	432.0 432.0 432.0 432.0 432.0 367.2 367.2 367.2 367.2 367.2 367.2 334.8 334.8 334.8 313.2 313.2	- - - - - - - - - - - - - - -	- - - - - - - - - - - - - - -	232.5 232.5 232.5 232.5 232.5 197.6 197.6 197.6 197.6 197.6 197.6 180.2 180.2 180.2 168.6 168.6	818	-	722	744	992	576-585
	PL 90004	1623.2 1345.0 1119.0 926.1 854.4 798.3 742.1 687.5 585.4 543.9	1.7 2.1 2.5 3.0 3.3 3.5 3.8 4.1 4.8 5.1	72014 59672 49645 41087 37906 35417 32924 30501 25972 24130	1.2 1.4 1.6 1.9 2.0 2.1 2.2 2.4 2.7 2.9	30.0	21.0	160L/2A	263.5 263.5 263.5 240.3 240.3 224.8 224.8 224.8 209.3 209.3	367.2 367.2 367.2 334.8 334.8 313.2 313.2 313.2 291.6 291.6	- - - - - - - - - -	- - - - - - - - - -	197.6 197.6 197.6 180.2 180.2 168.6 168.6 168.6 156.9 156.9	785	-	689	711	959	576-585

P1 (kW)		iges	n2 (rpm)	M2 (Nm)	fs	Pt (20°C) (kW)	Pt (40°C) (kW)	Motor IE2	FR (kN)					~ Kg					mm
									MC	MS	PC	PS	CPC	M...	P...	F	FS	CPC	
15.00	PL 65004	694.2	1.3	95818	0.8	25.0	17.5	180L/6A	156.0	216.0	-	-	117.0	630	-	572	586	738	556-569
		640.4	1.4	88392	0.9				156.0	216.0	-	-	117.0						
		556.2	1.6	76770	1.0				132.6	183.6	-	-	99.5						
		515.3	1.7	71125	1.0				132.6	183.6	-	-	99.5						
		456.4	2.0	62995	1.1				132.6	183.6	-	-	99.5						
		407.7	2.2	56273	1.3				132.6	183.6	-	-	99.5						
		364.4	2.5	50297	1.4				132.6	183.6	-	-	99.5						
		333.7	2.7	46059	1.5				120.9	167.4	-	-	90.7						
		301.7	3.0	41642	1.6				120.9	167.4	-	-	90.7						
		280.3	3.2	38689	1.7				120.9	167.4	-	-	90.7						
		256.7	3.5	35431	1.8				113.1	156.6	-	-	84.8						
		212.5	4.2	29331	2.1				113.1	156.6	-	-	84.8						
	PL 65004	1008.1	1.4	89450	0.9	25.0	17.5	160L/4A	156.0	216.0	-	-	117.0	607	-	549	563	715	556-569
		838.8	1.7	74428	1.0				132.6	183.6	-	-	99.5						
		694.2	2.0	61597	1.2				132.6	183.6	-	-	99.5						
		640.4	2.2	56823	1.2				132.6	183.6	-	-	99.5						
		556.2	2.5	49352	1.4				120.9	167.4	-	-	90.7						
		515.3	2.7	45723	1.5				120.9	167.4	-	-	90.7						
		456.4	3.1	40497	1.6				120.9	167.4	-	-	90.7						
		407.7	3.4	36176	1.8				120.9	167.4	-	-	90.7						
		364.4	3.8	32334	2.0				113.1	156.6	-	-	84.8						
		333.7	4.2	29610	2.1				113.1	156.6	-	-	84.8						
		301.7	4.6	26770	2.3				105.3	145.8	-	-	79.0						
		280.3	5.0	24871	2.4				105.3	145.8	-	-	79.0						
		256.7	5.5	22777	2.6				105.3	145.8	-	-	79.0						
	PL 65004	1008.1	2.8	44725	1.5	25.0	17.5	160L/2A	120.9	167.4	-	-	90.7	597	-	539	553	705	556-569
		838.8	3.3	37214	1.8				120.9	167.4	-	-	90.7						
		694.2	4.0	30799	2.1				113.1	156.6	-	-	84.8						
		640.4	4.4	28412	2.2				113.1	156.6	-	-	84.8						
		556.2	5.0	24676	2.5				105.3	145.8	-	-	79.0						
		515.3	5.4	22862	2.6				105.3	145.8	-	-	79.0						
		456.4	6.1	20248	2.9				93.6	129.6	-	-	70.2						
	PL 50004	616.6	1.5	85107	0.8	20.0	14.0	180L/6A	178.0	246.0	-	-	133.5	538	-	480	493	646	556-569
		591.0	1.5	81573	0.8				151.3	209.1	-	-	113.5						
		564.7	1.6	77943	0.8				151.3	209.1	-	-	113.5						
		511.6	1.8	70614	0.9				151.3	209.1	-	-	113.5						
		471.9	1.9	65135	1.0				151.3	209.1	-	-	113.5						
		432.2	2.1	59655	1.0				151.3	209.1	-	-	113.5						
		391.5	2.3	54037	1.1				151.3	209.1	-	-	113.5						
		358.5	2.5	49482	1.2				138.0	190.7	-	-	103.5						
		324.8	2.8	44831	1.3				138.0	190.7	-	-	103.5						
	PL 50004	686.4	2.0	60905	1.0	20.0	14.0	160L/4A	151.3	209.1	-	-	113.5	515	-	457	470	623	556-569
		616.6	2.3	54712	1.1				151.3	209.1	-	-	113.5						
		591.0	2.4	52440	1.2				151.3	209.1	-	-	113.5						
		564.7	2.5	50106	1.2				151.3	209.1	-	-	113.5						
		511.6	2.7	45395	1.3				138.0	190.7	-	-	103.5						
		471.9	3.0	41872	1.4				138.0	190.7	-	-	103.5						
		432.2	3.2	38350	1.5				138.0	190.7	-	-	103.5						
		391.5	3.6	34738	1.6				129.1	178.4	-	-	96.8						
		358.5	3.9	31810	1.8				129.1	178.4	-	-	96.8						
		324.8	4.3	28820	1.9				129.1	178.4	-	-	96.8						
	PL 50004	1151.0	2.4	51065	0.9	20.0	14.0	160L/2A	151.3	209.1	-	-	113.5	505	-	447	460	613	556-569
		1061.8	2.6	47107	0.9				138.0	190.7	-	-	103.5						
		952.6	2.9	42263	1.0				138.0	190.7	-	-	103.5						
		878.7	3.2	38984	1.1				138.0	190.7	-	-	103.5						
		789.4	3.5	35022	1.2				129.1	178.4	-	-	96.8						
		686.4	4.1	30453	1.8				129.1	178.4	-	-	96.8						
		616.6	4.5	27356	2.0				120.2	166.1	-	-	90.1						
		591.0	4.7	26220	2.1				120.2	166.1	-	-	90.1						
		564.7	5.0	25053	2.1				120.2	166.1	-	-	90.1						
		511.6	5.5	22697	2.3				120.2	166.1	-	-	90.1						
		471.9	5.9	20936	2.5				106.8	147.6	-	-	80.1						
		432.2	6.5	19175	2.7				106.8	147.6	-	-	80.1						
		391.5	7.2	17369	2.9				102.4	141.5	-	-	76.8						
	PL 35004	328.5	2.7	45342	0.8	17.0	11.9	180L/6A	111.6	158.1	-	-	83.7	406	-	370	378	469	516-529
		303.1	3.0	41836	0.9				111.6	158.1	-	-	83.7						
		277.5	3.2	38302	0.9				111.6	158.1	-	-	83.7						
		251.4	3.6	34700	1.0				104.4	147.9	-	-	78.3						
		230.3	3.9	31787	1.1				104.4	147.9	-	-	78.3						
		208.6	4.3	28792	1.2				104.4	147.9	-	-	78.3						
		191.0	4.7	26363	1.3				97.2	137.7	-	-	72.9						

P1 (kW)		iges	n2 (rpm)	M2 (Nm)	fs	Pt (20°C) (kW)	Pt (40°C) (kW)	Motor IE2	FR (kN) MC	MS	PC	PS	CPC	~ Kg M…	P…	F	FS	CPC	mm
15.00	PL 35004	496.0	2.8	44011	0.8	17.0	11.9	160L/4A	111.6	158.1	-	-	83.7	383	-	347	355	446	516-529
		437.1	3.2	38784	0.9				111.6	158.1	-	-	83.7						
		379.6	3.7	33682	1.0				104.4	147.9	-	-	78.3						
		362.7	3.9	32183	1.1				104.4	147.9	-	-	78.3						
		328.5	4.3	29148	1.2				104.4	147.9	-	-	78.3						
		303.1	4.6	26894	1.3				97.2	137.7	-	-	72.9						
		277.5	5.0	24623	1.3				97.2	137.7	-	-	72.9						
		251.4	5.6	22307	1.5				86.4	122.4	-	-	64.8						
		230.3	6.1	20435	1.6				86.4	122.4	-	-	64.8						
		208.6	6.7	18509	1.7				82.8	117.3	-	-	62.1						
		191.0	7.3	16948	1.8				82.8	117.3	-	-	62.1						
	PL 35004	816.8	3.4	36238	0.8	17.0	11.9	160L/2A	111.6	158.1	-	-	83.7	373	-	337	345	436	516-529
		762.5	3.7	33829	0.9				104.4	147.9	-	-	78.3						
		703.4	4.0	31207	0.9				104.4	147.9	-	-	78.3						
		677.7	4.1	30067	1.0				104.4	147.9	-	-	78.3						
		583.5	4.8	25887	1.1				97.2	137.7	-	-	72.9						
		496.0	5.6	22005	1.5				86.4	122.4	-	-	64.8						
		437.1	6.4	19392	1.6				86.4	122.4	-	-	64.8						
		379.6	7.4	16841	1.8				82.8	117.3	-	-	62.1						
		362.7	7.7	16091	1.9				79.2	112.2	-	-	59.4						
		328.5	8.5	14574	2.1				75.6	107.1	-	-	56.7						
		303.1	9.2	13447	2.2				75.6	107.1	-	-	56.7						
		277.5	10.1	12311	2.4				72.0	102.0	-	-	54.0						
		251.4	11.1	11153	2.6				72.0	102.0	-	-	54.0						
		230.3	12.2	10217	2.8				72.0	102.0	-	-	54.0						
		208.6	13.4	9255	3.0				67.7	95.9	-	-	50.8						
	PL 30004	427.1	3.3	37897	0.8	17.0	11.9	160L/4A	69.8	106.2	-	-	52.3	377	-	336	344	440	496-509
		396.0	3.5	35138	0.8				65.3	99.3	-	-	48.9						
		379.6	3.7	33682	0.8				65.3	99.3	-	-	48.9						
		362.7	3.9	32183	0.9				65.3	99.3	-	-	48.9						
		328.5	4.3	29148	1.0				65.3	99.3	-	-	48.9						
		314.9	4.4	27941	1.0				65.3	99.3	-	-	48.9						
		300.9	4.7	26699	1.0				60.8	92.5	-	-	45.6						
		251.4	5.6	22307	1.2				54.0	82.2	-	-	40.5						
	PL 30004	838.9	3.3	37218	0.8	17.0	11.9	160L/2A	69.8	106.2	-	-	52.3	367	-	326	334	430	496-509
		752.6	3.7	33390	0.9				65.3	99.3	-	-	48.9						
		694.3	4.0	30803	0.9				65.3	99.3	-	-	48.9						
		623.7	4.5	27671	1.0				65.3	99.3	-	-	48.9						
		576.0	4.9	25555	1.1				60.8	92.5	-	-	45.6						
		517.4	5.4	22955	1.2				60.8	92.5	-	-	45.6						
		477.3	5.9	21176	1.3				54.0	82.2	-	-	40.5						
		427.1	6.6	18949	1.4				51.8	78.8	-	-	38.8						
		396.0	7.1	17569	1.5				51.8	78.8	-	-	38.8						
		379.6	7.4	16841	1.5				51.8	78.8	-	-	38.8						
		362.7	7.7	16091	1.6				49.5	75.4	-	-	37.1						
		328.5	8.5	14574	1.7				47.3	71.9	-	-	35.4						
		314.9	8.9	13971	1.8				47.3	71.9	-	-	35.4						
		300.9	9.3	13350	1.8				47.3	71.9	-	-	35.4						
		251.4	11.1	11153	2.2				45.0	68.5	-	-	33.8						
	PL 30004	251.4	3.6	34700	0.8	17.0	11.9	180L/6A	65.3	99.3	-	-	48.9	400	-	359	367	463	496-509
	PL 25004	424.3	3.3	37649	0.8	15.0	10.5	160L/4A	69.8	106.2	-	-	52.3	344	-	308	316	405	476-489
		408.4	3.4	36238	0.8				69.8	106.2	-	-	52.3						
		374.0	3.7	33185	0.9				65.3	99.3	-	-	48.9						
		338.8	4.1	30062	0.9				65.3	99.3	-	-	48.9						
	PL 25004	697.5	4.0	30945	0.9	15.0	10.5	160L/2A	65.3	99.3	-	-	48.9	334	-	298	306	395	476-489
		617.8	4.5	27409	1.0				60.8	92.5	-	-	45.6						
		556.9	5.0	24707	1.1				60.8	92.5	-	-	45.6						
		493.2	5.7	21881	1.2				54.0	82.2	-	-	40.5						
		455.5	6.1	20209	1.3				54.0	82.2	-	-	40.5						
		424.3	6.6	18824	1.4				51.8	78.8	-	-	38.8						
		408.4	6.9	18119	1.4				51.8	78.8	-	-	38.8						
		374.0	7.5	16593	1.5				51.8	78.8	-	-	38.8						
		338.8	8.3	15031	1.7				49.5	75.4	-	-	37.1						
	PL 18004*	438.4	6.4	19450	0.8	13.0	9.1	160L/2A	36.0	63.6	84.0	111.6	27.0	255	282	224	260	305	452-469
		377.2	7.4	16735	0.9				34.5	61.0	80.5	107.0	25.9						
		348.6	8.0	15466	1.0				33.0	58.3	77.0	102.3	24.8						
	PL 16004*	459.9	6.1	20404	0.8	11.0	7.7	160L/2A	36.0	63.6	84.0	111.6	27.0	241	268	210	246	291	428-445
		421.2	6.6	18687	0.8				34.5	61.0	80.5	107.0	25.9						
		388.6	7.2	17240	0.9				34.5	61.0	80.5	107.0	25.9						
		352.0	8.0	15617	0.9				33.0	58.3	77.0	102.3	24.8						
	PL 90003	185.5	4.9	26532	2.6	45.0	31.5	180L/6A	209.3	291.6	-	-	156.9	807	-	711	733	981	576-585
	PL 65003	167.8	5.4	19896	2.9	35.0	24.5	180L/6A	105.3	145.8	-	-	79.0	618	-	560	574	726	556-569
		139.1	6.5	24001	2.5				93.6	129.6	-	-	70.2						

* Soğutucu gereklidir / Cooling is required / Kühlung ist erforderlich / È richiesto raffreddamento / Le refroidissement est nécessaire / Se requiere un enfriamiento

P1 (kW)		iges	n2 (rpm)	M2 (Nm)	fs	Pt (20°C) (kW)	Pt (40°C) (kW)	Motor IE2	FR (kN)					~ Kg					mm
									MC	MS	PC	PS	CPC	M...	P...	F	FS	CPC	
15.00	PL 50003	293.6	3.1	41994	0.8	25.0	17.5	180L/6A	138.0	190.7	-	-	103.5	530	-	472	485	634	536-549
		247.7	3.6	35429	1.2				129.1	178.4	-	-	96.8						
		205.5	4.4	29393	1.4				129.1	178.4	-	-	96.8						
		170.1	5.3	24330	1.6				120.2	166.1	-	-	90.1						
		157.3	5.7	22499	1.7				106.8	147.6	-	-	80.1						
		138.6	6.5	19824	1.5				106.8	147.6	-	-	80.1						
		130.2	6.9	18623	2.0				102.4	141.5	-	-	76.8						
		116.9	7.7	16720	2.2				97.9	135.3	-	-	73.4						
		108.0	8.3	15447	2.3				97.9	135.3	-	-	73.4						
		93.0	9.7	13302	2.7				89.0	123.0	-	-	66.8						
	PL 50003	293.6	4.8	26996	1.2	25.0	17.5	160L/4A	120.2	166.1	-	-	90.1	507	-	449	462	611	536-549
		247.7	5.7	22776	1.7				106.8	147.6	-	-	80.1						
		205.5	6.8	18896	2.0				102.4	141.5	-	-	76.8						
		170.1	8.2	15641	2.3				97.9	135.3	-	-	73.4						
		157.3	8.9	14464	2.4				93.5	129.2	-	-	70.1						
		138.6	10.1	12744	2.2				89.0	123.0	-	-	66.8						
		130.2	10.8	11972	2.9				89.0	123.0	-	-	66.8						
	PL 50003	293.6	9.5	13498	2.1	25.0	17.5	160L/2A	89.0	123.0	-	-	66.8	497	-	439	452	601	536-549
		247.7	11.3	11388	3.0				89.0	123.0	-	-	66.8						
	PL 35003	230.3	3.9	32940	0.9	23.0	16.1	180L/6A	104.4	147.9	-	-	78.3	398	-	362	370	461	516-529
		191.1	4.7	27333	1.0				97.2	137.7	-	-	72.9						
		164.1	5.5	23472	1.2				97.2	137.7	-	-	72.9						
		158.1	5.7	22613	1.2				86.4	122.4	-	-	64.8						
		136.2	6.6	19481	1.4				82.8	117.3	-	-	62.1						
		121.1	7.4	17321	1.5				82.8	117.3	-	-	62.1						
		108.7	8.3	15548	1.7				79.2	112.2	-	-	59.4						
		99.6	9.0	14246	1.8				75.6	107.1	-	-	56.7						
		88.6	10.2	12673	2.3				72.0	102.0	-	-	54.0						
		83.2	10.8	11900	2.1				72.0	102.0	-	-	54.0						
		70.7	12.7	10112	2.8				67.7	95.9	-	-	50.8						
		64.8	13.9	9268	3.0				67.7	95.9	-	-	50.8						
	PL 35003	230.3	6.1	21176	1.3	23.0	16.1	160L/4A	86.4	122.4	-	-	64.8	375	-	339	347	438	516-529
		191.1	7.3	17572	1.5				82.8	117.3	-	-	62.1						
		164.1	8.5	15089	1.7				75.6	107.1	-	-	56.7						
		158.1	8.9	14537	1.8				75.6	107.1	-	-	56.7						
		136.2	10.3	12523	2.0				72.0	102.0	-	-	54.0						
		121.1	11.6	11135	2.2				72.0	102.0	-	-	54.0						
		108.7	12.9	9995	2.4				69.8	98.9	-	-	52.4						
		99.6	14.1	9158	2.6				67.7	95.9	-	-	50.8						
		83.2	16.8	7650	3.0				64.1	90.8	-	-	48.1						
	PL 35003	230.3	12.2	10588	2.3	23.0	16.1	160L/2A	72.0	102.0	-	-	54.0	365	-	329	337	428	516-529
		191.1	14.7	8786	2.7				67.7	95.9	-	-	50.8						
		164.1	17.1	7544	3.0				67.7	95.9	-	-	50.8						
	PL 30003	134.4	6.7	19224	1.3	23.0	16.1	180L/6A	51.8	78.8	-	-	38.8	392	-	351	359	455	496-509
		124.3	7.2	17779	1.4				51.8	78.8	-	-	38.8						
		102.9	8.7	14718	1.7				47.3	71.9	-	-	35.4						
		88.6	10.2	12673	1.9				45.0	68.5	-	-	33.8						
		73.5	12.2	10513	2.2				45.0	68.5	-	-	33.8						
		64.8	13.9	9268	2.5				42.3	64.4	-	-	31.7						
	PL 30003	134.4	10.4	12358	2.0	23.0	16.1	160L/4A	45.0	68.5	-	-	33.8	369	-	328	336	432	496-509
		124.3	11.3	11429	2.1				45.0	68.5	-	-	33.8						
		102.9	13.6	9462	2.4				43.7	66.4	-	-	32.7						
		88.6	15.8	8147	2.8				42.3	64.4			31.7						
	PL 25003	188.5	4.8	26962	0.8	20.0	14.0	180L/6A	60.8	92.5	-	45.6	45.6	361	-	325	333	422	476-489
		167.0	5.4	23886	0.9				60.8	92.5	-	45.6	45.6						
		156.0	5.8	22313	0.9				54.0	82.2	-	40.5	40.5						
		134.3	6.7	19209	1.0				51.8	78.8	-	38.8	38.8						
		128.4	7.0	18365	1.4				51.8	78.8	-	38.8	38.8						
		114.4	7.9	16363	1.2				49.5	75.4	-	37.1	37.1						
		106.3	8.5	15204	1.6				49.5	75.4	-	37.1	37.1						
		95.0	9.5	13588	1.4				47.3	71.9	-	35.4	35.4						
		88.0	10.2	12587	1.9				45.0	68.5	-	33.8	33.8						
		73.1	12.3	10456	2.2				45.0	68.5	-	33.8	33.8						
		60.5	14.9	8653	2.6				42.3	64.4	-	31.7	31.7						
		55.4	16.2	7924	2.8				42.3	64.4	-	31.7	31.7						

P1 (kW)		iges	n2 (rpm)	M2 (Nm)	fs	Pt (20°C) (kW)	Pt (40°C) (kW)	Motor IE2	FR (kN) MC	MS	PC	PS	CPC	~ Kg M…	P…	F	FS	CPC	mm
15.00	PL 25003	226.6	6.2	20836	0.8	20.0	14.0	160L/4A	54.0	82.2	-	-	40.5	338	-	302	310	399	476-489
		218.7	6.4	20109	1.0				54.0	82.2	-	-	40.5						
		188.5	7.4	17332	1.1				49.5	75.4	-	-	37.1						
		167.0	8.4	15356	1.2				49.5	75.4	-	-	37.1						
		156.0	9.0	14344	1.3				47.3	71.9	-	-	35.4						
		134.3	10.4	12349	1.5				45.0	68.5	-	-	33.8						
		128.4	10.9	11806	2.0				45.0	68.5	-	-	33.8						
		114.4	12.2	10519	1.7				43.7	66.4	-	-	32.7						
		106.3	13.2	9774	2.4				43.7	66.4	-	-	32.7						
		95.0	14.7	8735	2.0				42.3	64.4	-	-	31.7						
		88.0	15.9	8092	2.8				42.3	64.4	-	-	31.7						
	PL 25003	317.2	8.8	14583	1.0	20.0	14.0	160L/2A	47.3	71.9	-	-	35.4	328	-	292	300	389	476-489
		262.8	10.7	12082	1.2				45.0	68.5	-	-	33.8						
		226.6	12.4	10418	1.3				45.0	68.5	-	-	33.8						
		218.7	12.8	10055	1.8				42.3	64.4	-	-	31.7						
		188.5	14.9	8666	2.0				42.3	64.4	-	-	31.7						
		167.0	16.8	7678	2.2				42.3	64.4	-	-	31.7						
		156.0	17.9	7172	2.4				37.4	56.9	-	-	28.0						
		134.3	20.8	6174	2.7				37.4	56.9	-	-	28.0						
		114.4	24.5	5260	3.0				35.1	53.4	-	-	26.3						
	PL 18003	180.2	7.8	16569	0.8	17.0	11.9	160L/4A	33.0	58.3	77.0	102.3	24.8	258	285	227	263	308	452-469
		149.1	9.4	13710	0.9				31.5	55.7	73.5	97.7	23.6						
		128.4	10.9	11806	1.0				30.0	53.0	70.0	93.0	22.5						
		106.7	13.1	9811	1.4				29.1	51.4	67.9	90.2	21.8						
		94.5	14.8	8689	1.5				28.2	49.8	65.8	87.4	21.2						
		81.4	17.2	7485	1.7				26.7	47.2	62.3	82.8	20.0						
		73.3	19.1	6740	1.9				24.9	44.0	58.1	77.2	18.7						
		65.0	21.5	5977	2.1				24.9	44.0	58.1	77.2	18.7						
		53.8	26.0	4947	2.4				23.4	41.3	54.6	72.5	17.6						
	PL 18003	106.7	8.4	15262	1.0	17.0	11.9	180L/6A	33.0	58.3	77.0	102.3	24.8	281	308	250	286	331	452-469
		94.5	9.5	13517	1.1				30.0	53.0	70.0	93.0	22.5						
		81.4	11.1	11643	1.2				30.0	53.0	70.0	93.0	22.5						
		73.3	12.3	10484	1.3				30.0	53.0	70.0	93.0	22.5						
		65.0	13.8	9297	1.4				28.2	49.8	65.8	87.4	21.2						
		53.8	16.7	7695	1.7				28.2	49.8	65.8	87.4	21.2						
	PL 18003	180.2	15.5	8285	1.4	17.0	11.9	160L/2A	28.2	49.8	65.8	87.4	21.2	248	275	217	253	298	452-469
		149.1	18.8	6855	1.6				24.9	44.0	58.1	77.2	18.7						
		128.4	21.8	5903	1.8				24.9	44.0	58.1	77.2	18.7						
		106.7	26.2	4905	2.5				23.4	41.3	54.6	72.5	17.6						
		94.5	29.6	4345	2.7				22.2	39.2	51.8	68.8	16.7						
	PL 16003	109.3	8.2	15633	0.8	15.0	10.5	180L/6A	33.0	58.3	77.0	102.3	24.8	268	295	236	273	318	428-445
		94.9	9.5	13574	0.9				31.5	55.7	73.5	97.7	23.6						
		82.1	11.0	11743	1.2				30.0	53.0	70.0	93.0	22.5						
		75.2	12.0	10756	1.3				30.0	53.0	70.0	93.0	22.5						
		62.9	14.3	8997	1.5				28.2	49.8	65.8	87.4	21.2						
		57.6	15.6	8239	1.6				28.2	49.8	65.8	87.4	21.2						
	PL 16003	129.4	10.8	11898	0.8	15.0	10.5	160L/4A	30.0	53.0	70.0	93.0	22.5	245	272	213	250	295	428-445
		124.0	11.3	11402	1.1				30.0	53.0	70.0	93.0	22.5						
		118.5	11.8	10896	0.8				30.0	53.0	70.0	93.0	22.5						
		109.3	12.8	10050	1.2				29.1	51.4	67.9	90.2	21.8						
		94.9	14.8	8726	1.3				28.2	49.8	65.8	87.4	21.2						
		82.1	17.1	7549	1.7				26.7	47.2	62.3	82.8	20.0						
		75.2	18.6	6915	1.8				26.7	47.2	62.3	82.8	20.0						
		62.9	22.3	5784	2.1				24.0	42.4	56.0	74.4	18.0						
		57.6	24.3	5296	2.3				23.4	41.3	54.6	72.5	17.6						
	PL 16003	274.1	10.2	12602	0.8	15.0	10.5	160L/2A	30.0	53.0	70.0	93.0	22.5	235	262	203	240	285	428-445
		226.8	12.3	10427	0.9				30.0	53.0	70.0	93.0	22.5						
		195.3	14.3	8979	1.0				28.2	49.8	65.8	87.4	21.2						
		188.2	14.9	8652	1.0				28.2	49.8	65.8	87.4	21.2						
		155.9	18.0	7167	1.2				24.9	44.0	58.1	77.2	18.7						
		144.0	19.4	6620	1.3				24.9	44.0	58.1	77.2	18.7						
		129.4	21.6	5949	1.4				24.9	44.0	58.1	77.2	18.7						
		124.0	22.6	5701	1.9				23.4	41.3	54.6	72.5	17.6						
		118.5	23.6	5448	1.5				23.4	41.3	54.6	72.5	17.6						
		109.3	25.6	5025	2.1				23.4	41.3	54.6	72.5	17.6						
		94.9	29.5	4363	2.4				22.2	39.2	51.8	68.8	16.7						
	PL 10003	82.1	11.0	11743	0.8	15.0	10.5	180L/6A	32.5	47.5	-	-	24.4	260	-	227	265	310	410-421
		75.2	12.0	10756	0.9				32.5	47.5	-	-	24.4						
		62.9	14.3	8997	1.0				30.6	44.7	-	-	22.9						
		57.6	15.6	8239	1.1				30.6	44.7	-	-	22.9						

P1 (kW)		iges	n2 (rpm)	M2 (Nm)	fs	Pt (20°C) (kW)	Pt (40°C) (kW)	Motor IE2	FR (kN)					~ Kg					mm
									MC	MS	PC	PS	CPC	M...	P...	F	FS	CPC	
15.00	PL 10003	109.3	12.8	10050	0.8	15.0	10.5	160L/4A	31.5	46.1	-	-	23.6	237	-	204	242	287	410-421
		94.9	14.8	8726	0.9				30.6	44.7	-	-	22.9						
		82.1	17.1	7549	1.2				28.9	42.3	-	-	21.7						
		75.2	18.6	6915	1.3				28.9	42.3	-	-	21.7						
		62.9	22.3	5784	1.4				26.0	38.0	-	-	19.5						
		57.6	24.3	5296	1.6				25.4	37.1	-	-	19.0						
	PL 10003	173.6	16.1	7981	1.0	15.0	10.5	160L/2A	30.6	44.7	-	-	22.9	227	-	194	232	277	410-421
		155.9	18.0	7167	0.8				27.0	39.4	-	-	20.2						
		144.0	19.4	6620	1.1				27.0	39.4	-	-	20.2						
		129.4	21.6	5949	0.9				27.0	39.4	-	-	20.2						
		124.0	22.6	5701	1.2				25.4	37.1	-	-	19.0						
		118.5	23.6	5448	1.0				25.4	37.1	-	-	19.0						
		109.3	25.6	5025	1.4				25.4	37.1	-	-	19.0						
		94.9	29.5	4363	1.6				24.1	35.2	-	-	18.0						
		82.1	34.1	3775	2.1				22.8	33.3	-	-	17.1						
		75.2	37.2	3457	2.2				22.8	33.3	-	-	17.1						
		62.9	44.5	2892	2.6				21.1	30.9	-	-	15.8						
		57.6	48.6	2648	2.8				20.8	30.4	-	-	15.6						
	PL 7003*	64.8	21.6	5958	0.8	14.0	9.8	160L/4A	-	-	47.7	57.3	35.8	-	200	182	203	217	392-403
		53.8	26.0	4947	0.9				-	-	44.9	53.8	33.6						
	PL 7003*	127.9	21.9	5880	0.8	14.0	9.8	160L/2A	-	-	47.7	57.3	35.8	-	190	172	193	207	392-403
		112.9	24.8	5191	0.8				-	-	44.9	53.8	33.6						
		102.1	27.4	4694	1.0				-	-	44.9	53.8	33.6						
		93.7	29.9	4308	1.0				-	-	42.6	51.1	31.9						
		88.4	31.7	4064	0.9				-	-	42.6	51.1	31.9						
		78.3	35.8	3600	1.1				-	-	40.3	48.3	30.2						
		71.7	39.1	3296	1.2				-	-	38.5	46.2	28.9						
		64.8	43.2	2979	1.4				-	-	37.4	44.9	28.0						
		53.8	52.0	2473	1.7				-	-	36.8	44.2	27.6						
	PL 5003*	90.7	30.9	4170	0.8	10.0	7.0	160L/2A	13.0	16.7	23.3	27.0	17.5	152	161	143	154	165	370-385
		82.1	34.1	3775	0.8				12.3	15.8	22.1	25.6	16.5						
		75.2	37.2	3457	0.9				12.3	15.8	22.1	25.6	16.5						
		62.9	44.5	2892	1.0				11.4	14.6	20.5	23.7	15.4						
		57.6	48.6	2648	1.2				11.2	14.4	20.2	23.4	15.1						
		52.1	53.7	2395	1.1				10.9	14.0	19.5	22.6	14.6						
	PL 2503*	57.6	48.6	2648	0.8	8.0	5.6	160L/2A	11.2	14.4	20.2	23.4	15.1	146	155	137	148	159	348-363
		52.1	53.7	2395	0.8				10.9	14.0	19.5	22.6	14.6						
	PL 25002	43.8	20.5	6492	1.9	30.0	21.0	180L/6A	37.4	56.9	-	-	28.0	349	-	313	321	410	476-489
		36.3	24.8	5380	2.3				35.1	53.4	-	-	26.3						
	PL 25002	43.8	32.0	4173	2.8	30.0	21.0	160L/4A	33.3	50.7	-	-	25.0	326	-	290	298	387	476-489
	PL 18002	30.0	30.0	4447	2.3	25.0	17.5	180L/6A	22.2	39.2	51.8	68.8	16.7	269	296	237	274	319	452-469
		24.9	36.1	3691	2.7				21.0	37.1	49.0	65.1	15.8						
	PL 16002	48.9	18.4	7248	0.9	23.0	16.1	180L/6A	24.9	44.0	58.1	77.2	18.7	260	287	228	265	310	428-445
		40.5	22.2	6003	1.0				24.9	44.0	58.1	77.2	18.7						
		33.6	26.8	4980	1.6				23.4	41.3	54.6	72.5	17.6						
		28.9	31.1	4284	1.8				22.2	39.2	51.8	68.8	16.7						
		22.1	40.7	3276	3.0				20.1	35.5	46.9	62.3	15.1						
	PL 16002	48.9	28.6	4659	1.3	23.0	16.1	160L/4A	22.8	40.3	53.2	70.7	17.1	237	264	205	242	287	428-445
		40.5	34.6	3859	1.5				11.1	19.6	25.9	34.4	8.3						
		33.6	41.7	3202	2.3				20.1	35.5	46.9	62.3	15.1						
		28.9	48.4	2754	2.6				19.2	33.9	44.8	59.5	14.4						
	PL 16002	48.9	57.3	2330	2.3	23.0	16.1	160L/2A	18.6	32.9	43.4	57.7	14.0	227	254	195	232	277	428-445
		40.5	69.1	1930	2.7				17.1	30.2	39.9	53.0	12.8						
	PL 10002	33.6	26.8	4980	1.1	23.0	16.1	180L/6A	25.4	37.1	-	-	19.0	252	-	219	257	302	410-421
		28.9	31.1	4284	1.2				24.1	35.2	-	-	18.0						
		25.7	35.0	3809	1.8				22.8	33.3	-	-	17.1						
		22.1	40.7	3276	2.0				21.8	31.8	-	-	16.3						
		18.4	48.9	2727	2.7				20.8	30.4	-	-	15.6						
		16.2	55.6	2401	2.5				20.2	29.5	-	-	15.1						
	PL 10002	48.9	28.6	4659	0.9	23.0	16.1	160L/4A	24.1	35.2	-	-	18.0	229	-	196	234	279	410-421
		40.5	34.6	3859	1.0				22.8	33.3	-	-	17.1						
		33.6	41.7	3202	1.6				21.8	31.8	-	-	16.3						
		28.9	48.4	2754	1.8				20.8	30.4	-	-	15.6						
		25.7	54.5	2449	2.5				20.2	29.5	-	-	15.1						
		22.1	63.3	2106	2.8				18.9	27.6	-	-	14.1						
	PL 10002	48.9	57.3	2330	1.6	23.0	16.1	160L/2A	20.2	29.5	-	-	15.1	219	-	186	224	269	410-421
		40.5	69.1	1930	1.8				18.5	27.1	-	-	13.9						
		33.6	83.3	1601	2.8				17.2	25.2	-	-	12.9						

* Soğutucu gereklidir / Cooling is required / Kühlung ist erforderlich / È richiesto raffreddamento / Le refroidissement est nécessaire / Se requiere un enfriamiento

P1 (kW)		iges	n2 (rpm)	M2 (Nm)	fs	Pt (20°C) (kW)	Pt (40°C) (kW)	Motor IE2	FR (kN) MC	MS	PC	PS	CPC	~ Kg M…	P…	F	FS	CPC	mm
15.00	PL 7002	30.0	30.0	4447	0.8	18.0	12.6	180L/6A	-	-	42.6	51.1	31.9	-	217	199	220	233	392-403
		26.6	33.8	3943	1.0				-	-	40.3	48.3	30.2						
		22.9	39.3	3394	1.2				-	-	38.5	46.2	28.9						
		20.6	43.7	3053	1.1				-	-	37.4	44.9	28.0						
		18.3	49.2	2712	1.4				-	-	36.8	44.2	27.6						
		13.9	64.7	2060	1.9				-	-	33.4	40.0	25.0						
	PL 7002	42.1	33.3	4011	0.8	18.0	12.6	160L/4A	-	-	41.4	49.7	31.1	-	194	176	197	210	392-403
		36.3	38.6	3459	1.0				-	-	38.5	46.2	29.5						
		30.0	46.7	2859	1.2				-	-	37.4	44.9	28.0						
		26.6	52.6	2535	1.5				-	-	36.2	43.5	27.6						
		22.9	61.1	2182	1.7				-	-	33.9	40.7	25.4						
		20.6	68.0	1963	1.6				-	-	32.8	39.3	24.6						
		18.3	76.5	1744	2.0				-	-	32.2	38.6	24.2						
		13.9	100.7	1324	2.8				-	-	29.3	35.2	22.0						
	PL 7002	50.8	55.1	2420	0.9	18.0	12.6	160L/2A	-	-	35.7	42.8	26.7	-	184	166	187	200	392-403
		42.1	66.5	2006	1.4				-	-	33.4	40.0	25.0						
		36.3	77.1	1729	1.8				-	-	32.2	38.6	24.2						
		30.0	93.3	1429	2.1				-	-	29.6	35.5	22.2						
		26.6	105.3	1267	2.7				-	-	29.3	35.2	22.0						
		22.9	122.3	1091	3.0				-	-	27.9	33.5	20.9						
		20.6	135.9	981	2.8				-	-	26.5	31.7	19.8						
	PL 5002	23.1	39.0	3424	0.9	15.0	10.5	180L/6A	11.7	15.1	21.1	24.5	15.8	179	188	170	181	192	370-385
		18.4	48.9	2727	0.8				11.2	14.4	20.2	23.4	15.1						
		16.2	55.6	2401	1.2				10.9	14.0	19.5	22.6	14.6						
		13.4	67.2	1986	1.5				10.2	13.1	18.3	21.2	13.7						
	PL 5002	28.9	48.4	2754	0.8	15.0	10.5	160L/4A	11.2	14.4	20.2	23.4	15.1	156	165	147	158	169	370-385
		23.1	60.6	2201	1.2				10.3	13.3	18.6	21.5	13.9						
		18.4	76.1	1753	1.2				9.8	12.6	17.6	20.4	13.2						
		16.2	86.4	1544	1.8				9.3	11.9	16.7	19.3	12.5						
		13.4	104.5	1277	2.1				8.9	11.5	16.1	18.6	12.0						
	PL 5002	40.5	69.1	1930	1.0	15.0	10.5	160L/2A	10.0	12.8	18.0	20.8	13.5	146	155	137	148	159	370-385
		34.9	80.2	1663	1.3				9.5	12.2	17.0	19.7	12.8						
		28.9	96.9	1377	1.5				9.0	11.6	16.2	18.8	12.2						
		23.1	121.2	1101	2.2				8.5	10.9	15.3	17.7	11.5						
		18.4	152.2	877	2.1				7.8	10.0	14.0	16.2	10.5						
	PL 2502*	16.2	55.6	2401	0.9	12.0	8.4	180L/6A	10.9	14.0	19.5	22.6	14.6	173	182	165	175	186	348-363
		13.4	67.2	1986	1.0				10.2	13.1	18.3	21.2	13.7						
	PL 2502*	23.1	60.6	2201	0.8	12.0	8.4	160L/4A	10.3	13.3	18.6	21.5	13.9	150	159	142	152	163	348-363
		18.4	76.1	1753	0.8				9.8	12.6	17.6	20.4	13.2						
		16.2	86.4	1544	1.2				9.3	11.9	16.7	19.3	12.5						
		13.4	104.5	1277	1.4				8.9	11.5	16.1	18.6	12.0						
	PL 2502	34.9	80.2	1663	0.9	12.0	8.4	160L/2A	9.5	12.2	17.0	19.7	12.8	140	149	132	142	153	348-363
		28.9	96.9	1377	1.0				9.0	11.6	16.2	18.8	12.2						
		23.1	121.2	1101	1.5				8.5	10.9	15.3	17.7	11.5						
		18.4	152.2	877	1.5				7.8	10.0	14.0	16.2	10.5						
		16.2	172.8	772	2.2				7.4	9.6	13.4	15.5	10.0						
		13.4	209.0	638	2.6				7.3	9.3	13.1	15.1	9.8						
	PL 1602*	24.0	116.7	1143	0.8	8.0	5.6	160L/2A	2.7	3.3	5.8	7.3	4.4	126	128	124	127	131	326-340
		19.9	140.7	948	0.9				2.5	3.1	5.5	6.9	4.1						
		15.2	184.2	724	1.1				2.3	2.9	5.1	6.4	3.8						
		12.6	222.2	600	1.3				2.2	2.7	4.9	6.1	3.6						
	PL 1002*	12.6	222.2	600	0.8	8.0	5.6	160L/2A	2.2	2.7	4.9	6.1	3.6	124	126	122	125	129	304-318
	PL 10001	8.67	103.8	1332	1.7	40.0	28.0	180L/6A	16.6	24.2	-	-	12.4	235	-	203	241	286	410-421
		6.75	133.3	1037	3.0				15.0	21.9	-	-	11.2						
	PL 10001	8.67	161.5	856	2.5	40.0	28.0	160L/4A	14.5	21.1	-	-	10.8	212	-	180	218	263	410-421
	PL 7001	7.00	128.6	1075	1.8	30.0	21.0	180L/6A	-	-	27.9	33.5	20.9	-	205	187	208	221	392-403
		5.80	155.2	891	2.6				-	-	25.6	30.7	19.2						
	PL 7001	7.00	200.0	691	2.6	30.0	21.0	160L/4A	-	-	23.9	28.6	17.9	-	182	164	185	198	392-403
	PL 5001	7.25	124.1	1114	1.2	20.0	14.0	180L/6A	8.5	10.9	15.3	17.7	11.5	171	180	163	173	184	370-385
		6.00	150.0	922	1.8				8.1	10.4	14.5	16.8	10.9						
		5.17	174.1	794	2.3				7.4	9.6	13.4	15.5	10.0						
	PL 5001	7.25	193.1	716	1.7	20.0	14.0	160L/4A	7.4	9.5	13.2	15.3	9.9	148	157	140	150	161	370-385
		6.00	233.3	592	2.6				7.0	9.0	12.6	14.6	9.5						
	PL 5001	7.25	386.2	358	3.0	20.0	14.0	160L/2A	6.1	7.9	11.0	12.8	8.3	138	147	130	140	151	370-385

* Soğutucu gereklidir / Cooling is required / Kühlung ist erforderlich / È richiesto raffreddamento / Le refroidissement est nécessaire / Se requiere un enfriamiento

P1 (kW)		iges	n2 (rpm)	M2 (Nm)	fs	Pt (20°C) (kW)	Pt (40°C) (kW)	Motor IE2	FR (kN)					~ Kg					mm
									MC	MS	PC	PS	CPC	M...	P...	F	FS	CPC	
15.00	PL 2501	7.25	124.1	1114	0.8	20.0	14.0	180L/6A	8.5	10.9	15.3	17.7	11.5	167	176	158	169	180	348-363
		6.00	150.0	922	1.2				8.1	10.4	14.5	16.8	10.9						
		5.17	174.1	794	1.6				7.4	9.6	13.4	15.5	10.0						
		4.13	217.9	634	2.3				7.1	9.1	12.8	14.8	9.6						
		3.78	238.1	581	2.8				6.9	8.9	12.4	14.4	9.3						
	PL 2501	7.25	193.1	716	1.1	20.0	14.0	160L/4A	7.4	9.5	13.2	15.3	9.9	144	153	135	146	157	348-363
		6.00	233.3	592	1.7				7.0	9.0	12.6	14.6	9.5						
		5.17	270.8	510	2.3				6.7	8.6	12.0	13.9	9.0						
	PL 2501	7.25	386.2	358	2.0	20.0	14.0	160L/2A	6.1	7.9	11.0	12.8	8.3	134	143	125	136	147	348-363
		6.00	466.7	296	3.0				5.8	7.4	10.4	12.0	7.8						
	PL 1601*	4.29	209.8	659	1.2	12.0	8.4	180L/6A	2.3	2.8	5.0	6.2	3.5	153	155	151	154	158	326-340
		3.56	252.8	547	1.4				2.1	2.6	4.6	5.8	3.7						
	PL 1601*	5.60	250.0	553	1.0	12.0	8.4	160L/4A	2.1	2.6	4.7	5.9	3.5	130	132	128	131	135	326-340
		4.29	326.3	424	1.7				2.0	2.5	4.4	5.5	3.3						
		3.56	393.3	352	2.0				1.9	2.3	4.1	5.1	3.1						
	PL 1601	6.75	414.8	333	1.2	12.0	8.4	160L/2A	1.8	2.3	4.0	5.0	3.0	120	122	118	121	125	326-340
		5.60	500.0	276	1.7				1.8	2.2	3.8	4.8	2.9						
	PL 1001*	4.29	209.8	659	0.8	12.0	8.4	180L/6A	2.3	2.8	5.0	6.2	3.5	153	155	151	154	158	304-318
		3.56	252.8	547	0.9				2.1	2.6	4.6	5.8	3.7						
	PL 1001*	4.29	326.3	424	1.1	12.0	8.4	160L/4A	2.0	2.5	4.4	5.5	3.3	128	130	126	129	133	304-318
		3.56	393.3	352	1.3				1.9	2.3	4.1	5.1	3.1						
	PL 1001*	6.75	414.8	333	0.9	12.0	8.4	160L/2A	1.8	2.3	4.0	5.0	3.0	118	120	116	119	123	304-318
		5.60	500.0	276	1.2				1.8	2.2	3.8	4.8	2.9						
		4.29	652.7	212	2.0				1.6	2.0	3.5	4.4	2.7						
		3.56	786.5	176	2.3				1.5	1.9	3.4	4.2	2.5						
18.50	PL 90004	687.5	1.3	117035	0.8	30.0	21.0	200L/6B	310.0	432.0	-	-	232.5	872	-	776	798	1046	576-585
		630.8	1.4	107383	1.0				310.0	432.0	-	-	232.5						
		585.4	1.5	99654	0.9				263.5	367.2	-	-	197.6						
		543.9	1.7	92589	0.9				263.5	367.2	-	-	197.6						
		504.1	1.8	85814	1.0				263.5	367.2	-	-	197.6						
		462.6	1.9	78749	1.3				263.5	367.2	-	-	197.6						
		429.7	2.1	73149	1.4				263.5	367.2	-	-	197.6						
		398.3	2.3	67804	1.5				263.5	367.2	-	-	197.6						
		355.8	2.5	60569	1.6				240.3	334.8	-	-	180.2						
		306.4	2.9	52159	1.8				240.3	334.8	-	-	180.2						
		270.6	3.3	46065	2.0				240.3	334.8	-	-	180.2						
		244.6	3.7	41639	2.2				224.8	313.2	-	-	168.6						
		224.0	4.0	38132	2.4				224.8	313.2	-	-	168.6						
	PL 90004	926.1	1.5	101348	0.9	30.0	21.0	180M/4B	263.5	367.2	-	-	197.6	829	-	733	755	1003	576-585
		854.4	1.6	93501	0.9				263.5	367.2	-	-	197.6						
		798.3	1.8	87362	1.0				263.5	367.2	-	-	197.6						
		742.1	1.9	81212	1.0				263.5	367.2	-	-	197.6						
		687.5	2.0	75237	1.1				263.5	367.2	-	-	197.6						
		630.8	2.2	69032	1.5				263.5	367.2	-	-	197.6						
		585.4	2.4	64063	1.2				263.5	367.2	-	-	197.6						
		543.9	2.6	59522	1.3				240.3	334.8	-	-	180.2						
		504.1	2.8	55166	1.4				240.3	334.8	-	-	180.2						
		462.6	3.0	50625	1.9				240.3	334.8	-	-	180.2						
		429.7	3.3	47024	2.0				240.3	334.8	-	-	180.2						
		398.3	3.5	43588	2.1				224.8	313.2	-	-	168.6						
		355.8	3.9	38937	2.3				224.8	313.2	-	-	168.6						
		306.4	4.6	33531	2.7				209.3	291.6	-	-	156.9						
		270.6	5.2	29613	2.9				209.3	291.6	-	-	156.9						
	PL 90004	1623.2	1.7	88817	1.0	30.0	21.0	160L/2C	263.5	367.2	-	-	197.6	795	-	699	721	969	576-585
		1345.0	2.1	73595	1.1				263.5	367.2	-	-	197.6						
		1119.0	2.5	61229	1.3				263.5	367.2	-	-	197.6						
		926.1	3.0	50674	1.5				240.3	334.8	-	-	180.2						
		854.4	3.3	46751	1.6				240.3	334.8	-	-	180.2						
		798.3	3.5	43681	1.7				224.8	313.2	-	-	168.6						
		742.1	3.8	40606	1.8				224.8	313.2	-	-	168.6						
		687.5	4.1	37618	1.9				224.8	313.2	-	-	168.6						
		630.8	4.4	34516	2.6				224.8	313.2	-	-	168.6						
		585.4	4.8	32032	2.2				209.3	291.6	-	-	156.9						
		543.9	5.1	29761	2.3				209.3	291.6	-	-	156.9						
		504.1	5.6	27583	2.5				186.0	259.2	-	-	139.5						

* Soğutucu gereklidir / Cooling is required / Kühlung ist erforderlich / È richiesto raffreddamento / Le refroidissement est nécessaire / Se requiere un enfriamiento

P1 (kW)		iges	n2 (rpm)	M2 (Nm)	fs	Pt (20°C) (kW)	Pt (40°C) (kW)	Motor IE2	FR (kN)					~ Kg					mm
									MC	MS	PC	PS	CPC	M...	P...	F	FS	CPC	
18.50	PL 65004	556.2	1.6	94683	0.8	25.0	17.5	200L/6B	132.6	183.6	-	-	99.5	684	-	626	640	792	556-569
		515.3	1.7	87721	0.8				132.6	183.6	-	-	99.5						
		456.4	2.0	77694	0.9				132.6	183.6	-	-	99.5						
		407.7	2.2	69404	1.0				132.6	183.6	-	-	99.5						
		364.4	2.5	62033	1.1				132.6	183.6	-	-	99.5						
		333.7	2.7	56807	1.2				120.9	167.4	-	-	90.7						
		301.7	3.0	51359	1.3				120.9	167.4	-	-	90.7						
		280.3	3.2	47716	1.4				120.9	167.4	-	-	90.7						
		256.7	3.5	43699	1.5				113.1	156.6	-	-	84.8						
		212.5	4.2	36174	1.7				113.1	156.6	-	-	84.8						
	PL 65004	838.8	1.7	91794	0.8	25.0	17.5	180M/4B	132.6	183.6	-	-	99.5	641	-	583	597	749	556-569
		694.2	2.0	75970	0.9				132.6	183.6	-	-	99.5						
		640.4	2.2	70082	1.0				132.6	183.6	-	-	99.5						
		556.2	2.5	60868	1.1				120.9	167.4	-	-	90.7						
		515.3	2.7	56392	1.2				120.9	167.4	-	-	90.7						
		456.4	3.1	49946	1.3				120.9	167.4	-	-	90.7						
		407.7	3.4	44617	1.5				120.9	167.4	-	-	90.7						
		364.4	3.8	39878	1.6				113.1	156.6	-	-	84.8						
		333.7	4.2	36518	1.7				113.1	156.6	-	-	84.8						
		301.7	4.6	33017	1.9				105.3	145.8	-	-	79.0						
		280.3	5.0	30675	2.0				105.3	145.8	-	-	79.0						
		256.7	5.5	28092	2.1				105.3	145.8	-	-	79.0						
		212.5	6.6	23255	2.5				89.7	124.2	-	-	67.3						
	PL 65004	1008.1	2.8	55161	1.2	25.0	17.5	160L/2C	120.9	167.4	-	-	90.7	607	-	549	563	715	556-569
		838.8	3.3	45897	1.4				120.9	167.4	-	-	90.7						
		694.2	4.0	37985	1.7				113.1	156.6	-	-	84.8						
		640.4	4.4	35041	1.8				113.1	156.6	-	-	84.8						
		556.2	5.0	30434	2.0				105.3	145.8	-	-	79.0						
		515.3	5.4	28196	2.1				105.3	145.8	-	-	79.0						
		456.4	6.1	24973	2.4				93.6	129.6	-	-	70.2						
		407.7	6.9	22308	2.6				89.7	124.2	-	-	67.3						
		364.4	7.7	19939	2.9				85.8	118.8	-	-	64.4						
	PL 50004	471.9	1.9	80333	0.8	20.0	14.0	200L/6B	151.3	209.1	-	-	113.5	592	-	534	547	700	536-549
		432.2	2.1	73574	0.8				151.3	209.1	-	-	113.5						
		391.5	2.3	66646	0.9				151.3	209.1	-	-	113.5						
		358.5	2.5	61028	1.0				138.0	190.7	-	-	103.5						
		324.8	2.8	55291	1.1				138.0	190.7	-	-	103.5						
	PL 50004	686.4	2.0	75116	0.8	20.0	14.0	180M/4B	151.3	209.1	-	-	113.5	549	-	491	504	657	536-549
		616.6	2.3	67478	0.9				151.3	209.1	-	-	113.5						
		591.0	2.4	64676	0.9				151.3	209.1	-	-	113.5						
		564.7	2.5	61798	1.0				151.3	209.1	-	-	113.5						
		511.6	2.7	55987	1.1				138.0	190.7	-	-	103.5						
		471.9	3.0	51642	1.1				138.0	190.7	-	-	103.5						
		432.2	3.2	47298	1.2				138.0	190.7	-	-	103.5						
		391.5	3.6	42844	1.3				129.1	178.4	-	-	96.8						
		358.5	3.9	39232	1.4				129.1	178.4	-	-	96.8						
		324.8	4.3	35544	1.5				129.1	178.4	-	-	96.8						
	PL 50004	1061.8	2.6	58099	0.8	20.0	14.0	160L/2C	138.0	190.7	-	-	103.5	515	-	457	470	623	536-549
		952.6	2.9	52124	0.8				138.0	190.7	-	-	103.5						
		878.7	3.2	48080	0.9				138.0	190.7	-	-	103.5						
		789.4	3.5	43194	1.0				129.1	178.4	-	-	96.8						
		686.4	4.1	37558	1.5				129.1	178.4	-	-	96.8						
		616.6	4.5	33739	1.6				120.2	166.1	-	-	90.1						
		591.0	4.7	32338	1.7				120.2	166.1	-	-	90.1						
		564.7	5.0	30899	1.7				120.2	166.1	-	-	90.1						
		511.6	5.5	27993	1.9				120.2	166.1	-	-	90.1						
		471.9	5.9	25821	2.0				106.8	147.6	-	-	80.1						
		432.2	6.5	23649	2.2				106.8	147.6	-	-	80.1						
		391.5	7.2	21422	2.4				102.4	141.5	-	-	76.8						
		358.5	7.8	19616	2.5				97.9	135.3	-	-	73.4						
		324.8	8.6	17772	2.8				93.5	129.2	-	-	70.1						
	PL 35004	277.5	3.2	47239	0.8	17.0	11.9	200L/6B	111.6	158.1	-	-	83.7	460	-	424	432	523	516-529
		251.4	3.6	42796	0.8				104.4	147.9	-	-	78.3						
		230.3	3.9	39204	0.9				104.4	147.9	-	-	78.3						
		208.6	4.3	35510	1.0				104.4	147.9	-	-	78.3						
		191.0	4.7	32514	1.0				97.2	137.7	-	-	72.9						

P1 (kW)		iges	n2 (rpm)	M2 (Nm)	fs	Pt (20°C) (kW)	Pt (40°C) (kW)	Motor IE2	FR (kN)					~ Kg					mm
									MC	MS	PC	PS	CPC	M...	P...	F	FS	CPC	
18.50	PL 35004*	437.1	3.2	47834	0.8	17.0	11.9	180M/4B	111.6	158.1	-	-	83.7	417	-	381	389	480	516-529
		379.6	3.7	41542	0.8				104.4	147.9	-	-	78.3						
		362.7	3.9	39692	0.9				104.4	147.9	-	-	78.3						
		328.5	4.3	35949	0.9				104.4	147.9	-	-	78.3						
		303.1	4.6	33170	1.0				97.2	137.7	-	-	72.9						
		277.5	5.0	30368	1.1				97.2	137.7	-	-	72.9						
		251.4	5.6	27512	1.2				86.4	122.4	-	-	64.8						
		230.3	6.1	25203	1.3				86.4	122.4	-	-	64.8						
		208.6	6.7	22828	1.4				82.8	117.3	-	-	62.1						
		191.0	7.3	20902	1.5				82.8	117.3	-	-	62.1						
	PL 35004*	703.4	4.0	38488	0.8	17.0	11.9	160L/2C	104.4	147.9	-	-	78.3	383	-	347	355	446	516-529
		677.7	4.1	37082	0.8				104.4	147.9	-	-	78.3						
		583.5	4.8	31928	0.9				97.2	137.7	-	-	72.9						
		496.0	5.6	27140	1.2				86.4	122.4	-	-	64.8						
		437.1	6.4	23917	1.3				86.4	122.4	-	-	64.8						
		379.6	7.4	20771	1.5				82.8	117.3	-	-	62.1						
		362.7	7.7	19846	1.6				79.2	112.2	-	-	59.4						
		328.5	8.5	17975	1.7				75.6	107.1	-	-	56.7						
		303.1	9.2	16585	1.8				75.6	107.1	-	-	56.7						
		277.5	10.1	15184	2.0				72.0	102.0	-	-	54.0						
		251.4	11.1	13756	2.1				72.0	102.0	-	-	54.0						
		230.3	12.2	12601	2.3				72.0	102.0	-	-	54.0						
		208.6	13.4	11414	2.5				67.7	95.9	-	-	50.8						
		191.0	14.7	10451	2.7				67.7	95.9	-	-	50.8						
	PL 30004	328.5	4.3	35949	0.8	17.0	11.9	180M/4B	65.3	99.3	-	-	48.9	411	-	370	378	474	496-509
		314.9	4.4	34461	0.8				65.3	99.3	-	-	48.9						
		300.9	4.7	32929	0.8				60.8	92.5	-	-	45.6						
		251.4	5.6	27512	1.0				54.0	82.2	-	-	40.5						
	PL 30004*	623.7	4.5	34127	0.8	17.0	11.9	160L/2C	65.3	99.3	-	-	48.9	377	-	336	344	440	496-509
		576.0	4.9	31517	0.9				60.8	92.5	-	-	45.6						
		517.4	5.4	28311	0.9				60.8	92.5	-	-	45.6						
		477.3	5.9	26117	1.0				54.0	82.2	-	-	40.5						
		427.1	6.6	23370	1.1				51.8	78.8	-	-	38.8						
		396.0	7.1	21668	1.2				51.8	78.8	-	-	38.8						
		379.6	7.4	20771	1.2				51.8	78.8	-	-	38.8						
		362.7	7.7	19846	1.3				49.5	75.4	-	-	37.1						
		328.5	8.5	17975	1.4				47.3	71.9	-	-	35.4						
		314.9	8.9	17231	1.4				47.3	71.9	-	-	35.4						
		300.9	9.3	16464	1.5				47.3	71.9	-	-	35.4						
		251.4	11.1	13756	1.7				45.0	68.5	-	-	33.8						
	PL 25004	338.8	4.1	37077	0.8	15.0	10.5	180M/4B	65.3	99.3	-	-	48.9	378	-	342	350	439	476-489
	PL 25004*	617.8	4.5	33804	0.8	15.0	10.5	160L/2C	60.8	92.5	-	-	45.6	344	-	308	316	405	476-489
		556.9	5.0	30472	0.9				60.8	92.5	-	-	45.6						
		493.2	5.7	26987	1.0				54.0	82.2	-	-	40.5						
		455.5	6.1	24924	1.1				54.0	82.2	-	-	40.5						
		424.3	6.6	23217	1.1				51.8	78.8	-	-	38.8						
		408.4	6.9	22347	1.2				51.8	78.8	-	-	38.8						
		374.0	7.5	20464	1.2				51.8	78.8	-	-	38.8						
		338.8	8.3	18538	1.3				49.5	75.4	-	-	37.1						
	PL 18004*	348.6	8.0	19075	0.8	13.0	9.1	160L/2C	33.0	58.3	77.0	102.3	24.8	265	292	234	270	315	452-469
	PL 16004*	352.0	8.0	19261	0.8	11.0	7.7	160L/2C	33.0	58.3	77.0	102.3	24.8	251	278	220	256	301	428-445
	PL 90003	185.5	4.9	32723	2.1	45.0	31.5	200L/6B	209.3	291.6	-	-	156.9	861	-	765	787	1035	576-585
		154.3	5.8	27220	2.5				186.0	259.2	-	-	139.5						
		133.1	6.8	23480	2.8				178.3	248.4	-	-	133.7						
	PL 65003	167.8	5.4	29601	2.0	35.0	24.5	200L/6B	105.3	145.8	-	-	79.0	672	-	614	628	780	556-569
		139.1	6.5	24538	2.4				93.6	129.6	-	-	70.2						
		115.7	7.8	20410	2.8				85.8	118.8	-	-	64.4						
	PL 65003	167.8	8.3	19029	3.0	35.0	24.5	180M/4B	85.8	118.8	-	-	64.4	629	-	571	585	737	556-569
	PL 50003	247.7	3.6	43696	0.9	25.0	17.5	200L/6B	129.1	178.4	-	-	96.8	584	-	526	539	688	536-549
		205.5	4.4	36252	1.1				129.1	178.4	-	-	96.8						
		170.1	5.3	30007	1.3				120.2	166.1	-	-	90.1						
		157.3	5.7	27749	1.4				106.8	147.6	-	-	80.1						
		138.6	6.5	24450	1.2				106.8	147.6	-	-	80.1						
		130.2	6.9	22968	1.6				102.4	141.5	-	-	76.8						
		116.9	7.7	20622	1.8				97.9	135.3	-	-	73.4						
		108.0	8.3	19052	1.9				97.9	135.3	-	-	73.4						
		93.0	9.7	16406	2.2				89.0	123.0	-	-	66.8						
		74.2	12.1	13089	2.6				89.0	123.0	-	-	66.8						

* Soğutucu gereklidir / Cooling is required / Kühlung ist erforderlich / È richiesto raffreddamento / Le refroidissement est nécessaire / Se requiere un enfriamiento

P1 (kW)		iges	n2 (rpm)	M2 (Nm)	fs	Pt (20°C) (kW)	Pt (40°C) (kW)	Motor IE2	FR (kN)					~ Kg					mm
									MC	MS	PC	PS	CPC	M...	P...	F	FS	CPC	
18.50	PL 50003	293.6	4.8	33295	0.9	25.0	17.5	180M/4B	120.2	166.1	-	-	90.1	541	-	483	496	645	536-549
		247.7	5.7	28090	1.4				106.8	147.6	-	-	80.1						
		205.5	6.8	23305	1.6				102.4	141.5	-	-	76.8						
		170.1	8.2	19290	1.9				97.9	135.3	-	-	73.4						
		157.3	8.9	17838	2.0				93.5	129.2	-	-	70.1						
		138.6	10.1	15718	1.8				89.0	123.0	-	-	66.8						
		130.2	10.8	14765	2.4				89.0	123.0	-	-	66.8						
		116.9	12.0	13257	2.6				86.3	119.3	-	-	64.7						
		108.0	13.0	12248	2.7				86.3	119.3	-	-	64.7						
	PL 50003	293.6	9.5	16648	1.7	25.0	17.5	160L/2C	89.0	123.0	-	-	66.8	507	-	449	462	611	536-549
		247.7	11.3	14045	2.4				89.0	123.0	-	-	66.8						
		205.5	13.6	11652	2.9				83.7	115.6	-	-	62.7						
	PL 35003	191.1	4.7	33711	0.8	23.0	16.1	200L/6B	97.2	137.7	-	-	72.9	452	-	416	424	515	516-529
		164.1	5.5	28948	1.0				97.2	137.7	-	-	72.9						
		158.1	5.7	27890	1.0				86.4	122.4	-	-	64.8						
		136.2	6.6	24027	1.1				82.8	117.3	-	-	62.1						
		121.1	7.4	21363	1.2				82.8	117.3	-	-	62.1						
		108.7	8.3	19175	1.4				79.2	112.2	-	-	59.4						
		99.6	9.0	17570	1.4				75.6	107.1	-	-	56.7						
		88.6	10.2	15630	1.9				72.0	102.0	-	-	54.0						
		83.2	10.8	14677	1.7				72.0	102.0	-	-	54.0						
		70.7	12.7	12472	2.3				67.7	95.9	-	-	50.8						
		64.8	13.9	11431	2.4				67.7	95.9	-	-	50.8						
		58.7	15.3	10355	2.7				67.7	95.9	-	-	50.8						
		53.7	16.8	9473	2.8				67.7	95.9	-	-	50.8						
	PL 35003	230.3	6.1	26117	1.0	23.0	16.1	180M/4B	86.4	122.4	-	-	64.8	409	-	373	381	472	516-529
		191.1	7.3	21672	1.2				82.8	117.3	-	-	62.1						
		164.1	8.5	18610	1.4				75.6	107.1	-	-	56.7						
		158.1	8.9	17929	1.4				75.6	107.1	-	-	56.7						
		136.2	10.3	15446	1.6				72.0	102.0	-	-	54.0						
		121.1	11.6	13733	1.8				72.0	102.0	-	-	54.0						
		108.7	12.9	12327	2.0				69.8	98.9	-	-	52.4						
		99.6	14.1	11295	2.1				67.7	95.9	-	-	50.8						
		88.6	15.8	10048	2.7				67.7	95.9	-	-	50.8						
		83.2	16.8	9435	2.4				64.1	90.8	-	-	48.1						
	PL 35003	230.3	12.2	13058	1.9	23.0	16.1	160L/2C	72.0	102.0	-	-	54.0	375	-	339	347	438	516-529
		191.1	14.7	10836	2.2				67.7	95.9	-	-	50.8						
		164.1	17.1	9305	2.5				67.7	95.9	-	-	50.8						
		158.1	17.7	8965	2.5				59.8	84.7	-	-	44.8						
		136.2	20.6	7723	2.8				59.8	84.7	-	-	44.8						
	PL 30003	134.4	6.7	23709	1.1	23.0	16.1	200L/6B	51.8	78.8	-	-	38.8	446	-	405	413	509	496-509
		124.3	7.2	21927	1.2				51.8	78.8	-	-	38.8						
		102.9	8.7	18152	1.4				47.3	71.9	-	-	35.4						
		88.6	10.2	15630	1.6				45.0	68.5	-	-	33.8						
		73.5	12.2	12966	1.8				45.0	68.5	-	-	33.8						
		64.8	13.9	11431	2.0				42.3	64.4	-	-	31.7						
	PL 30003	134.4	10.4	15242	1.6	23.0	16.1	180M/4B	45.0	68.5	-	-	33.8	403	-	362	370	466	496-509
		124.3	11.3	14096	1.7				45.0	68.5	-	-	33.8						
		102.9	13.6	11669	2.0				43.7	66.4	-	-	32.7						
		88.6	15.8	10048	2.2				42.3	64.4	-	-	31.7						
		73.5	19.0	8335	2.6				37.4	56.9	-	-	28.0						
		64.8	21.6	7349	2.9				37.4	56.9	-	-	28.0						
	PL 30003	134.4	20.8	7621	2.8	23.0	16.1	160L/2C	37.4	56.9	-	-	28.0	369	-	328	336	432	496-509
		124.3	22.5	7048	3.0				35.1	53.4	-	-	26.3						
	PL 25003	156.0	5.8	27519	0.8	20.0	14.0	200L/6B	54.0	82.2	-	-	40.5	415	-	379	387	476	476-489
		134.3	6.7	23691	0.8				51.8	78.8	-	-	38.8						
		128.4	7.0	22651	1.1				51.8	78.8	-	-	38.8						
		114.4	7.9	20181	1.0				49.5	75.4	-	-	37.1						
		106.3	8.5	18752	1.3				49.5	75.4	-	-	37.1						
		95.0	9.5	16759	1.1				47.3	71.9	-	-	35.4						
		88.0	10.2	15524	1.6				45.0	68.5	-	-	33.8						
		73.1	12.3	12895	1.8				45.0	68.5	-	-	33.8						
		60.5	14.9	10673	2.1				42.3	64.4	-	-	31.7						
		55.4	16.2	9773	2.3				42.3	64.4	-	-	31.7						

P1 (kW)		iges	n2 (rpm)	M2 (Nm)	fs	Pt (20°C) (kW)	Pt (40°C) (kW)	Motor IE2	FR (kN)					~ Kg					mm
									MC	MS	PC	PS	CPC	M...	P...	F	FS	CPC	
18.50	PL 25003	218.7	6.4	24801	0.8	20.0	14.0	180M/4B	54.0	82.2	-	-	40.5	372	-	336	344	433	476-489
		188.5	7.4	21377	0.9				49.5	75.4	-	-	37.1						
		167.0	8.4	18938	1.0				49.5	75.4	-	-	37.1						
		156.0	9.0	17691	1.1				47.3	71.9	-	-	35.4						
		134.3	10.4	15230	1.2				45.0	68.5	-	-	33.8						
		128.4	10.9	14561	1.6				45.0	68.5	-	-	33.8						
		114.4	12.2	12973	1.4				43.7	66.4	-	-	32.7						
		106.3	13.2	12055	1.9				43.7	66.4	-	-	32.7						
		95.0	14.7	10773	1.6				42.3	64.4	-	-	31.7						
		88.0	15.9	9980	2.2				42.3	64.4	-	-	31.7						
		73.1	19.2	8290	2.6				37.4	56.9	-	-	28.0						
		60.5	23.1	6861	3.0				36.0	54.8	-	-	27.0						
	PL 25003	317.2	8.8	17986	0.8	20.0	14.0	160L/2C	47.3	71.9	-	-	35.4	338	-	302	310	399	476-489
		262.8	10.7	14901	1.0				45.0	68.5	-	-	33.8						
		226.6	12.4	12849	1.1				45.0	68.5	-	-	33.8						
		218.7	12.8	12401	1.4				42.3	64.4	-	-	31.7						
		188.5	14.9	10688	1.6				42.3	64.4	-	-	31.7						
		167.0	16.8	9469	1.8				42.3	64.4	-	-	31.7						
		156.0	17.9	8846	1.9				37.4	56.9	-	-	28.0						
		134.3	20.8	7615	2.2				37.4	56.9	-	-	28.0						
		128.4	21.8	7281	2.9				37.4	56.9	-	-	28.0						
		114.4	24.5	6487	2.5				35.1	53.4	-	-	26.3						
		95.0	29.5	5387	2.9				33.3	50.7	-	-	25.0						
	PL 18003	106.7	8.4	18823	0.8	17.0	11.9	200L/6B	33.0	58.3	77.0	102.3	24.8	335	362	304	340	385	452-469
		94.5	9.5	16670	0.9				30.0	53.0	70.0	93.0	22.5						
		81.4	11.1	14359	1.0				30.0	53.0	70.0	93.0	22.5						
		73.3	12.3	12931	1.1				30.0	53.0	70.0	93.0	22.5						
		65.0	13.8	11466	1.2				28.2	49.8	65.8	87.4	21.2						
		53.8	16.7	9491	1.4				28.2	49.8	65.8	87.4	21.2						
	PL 18003	128.4	10.9	14561	0.8	17.0	11.9	180M/4B	30.0	53.0	70.0	93.0	22.5	292	319	261	297	342	452-469
		106.7	13.1	12100	1.1				29.1	51.4	67.9	90.2	21.8						
		94.5	14.8	10717	1.2				28.2	49.8	65.8	87.4	21.2						
		81.4	17.2	9231	1.4				26.7	47.2	62.3	82.8	20.0						
		73.3	19.1	8313	1.5				24.9	44.0	58.1	77.2	18.7						
		65.0	21.5	7371	1.7				24.9	44.0	58.1	77.2	18.7						
		53.8	26.0	6101	2.0				23.4	41.3	54.6	72.5	17.6						
	PL 18003*	180.2	15.5	10218	1.1	17.0	11.9	160L/2C	28.2	49.8	65.8	87.4	21.2	258	285	227	263	308	452-469
		149.1	18.8	8454	1.3				24.9	44.0	58.1	77.2	18.7						
		128.4	21.8	7281	1.5				24.9	44.0	58.1	77.2	18.7						
		106.7	26.2	6050	2.0				23.4	41.3	54.6	72.5	17.6						
		94.5	29.6	5358	2.2				22.2	39.2	51.8	68.8	16.7						
		81.4	34.4	4616	2.5				21.0	37.1	49.0	65.1	15.8						
		73.3	38.2	4156	2.7				20.1	35.5	46.9	62.3	15.1						
		65.0	43.1	3686	3.0				19.5	34.5	45.5	60.5	14.6						
	PL 16003	82.1	11.0	14483	1.0	15.0	10.5	200L/6B	30.0	53.0	70.0	93.0	22.5	322	349	290	327	372	428-445
		75.2	12.0	13266	1.0				30.0	53.0	70.0	93.0	22.5						
		62.9	14.3	11096	1.2				28.2	49.8	65.8	87.4	21.2						
		57.6	15.6	10161	1.3				28.2	49.8	65.8	87.4	21.2						
	PL 16003	124.0	11.3	14062	0.9	15.0	10.5	180M/4B	30.0	53.0	70.0	93.0	22.5	279	306	247	284	329	428-445
		109.3	12.8	12395	1.0				29.1	51.4	67.9	90.2	21.8						
		94.9	14.8	10762	1.1				28.2	49.8	65.8	87.4	21.2						
		82.1	17.1	9310	1.4				26.7	47.2	62.3	82.8	20.0						
		75.2	18.6	8528	1.5				26.7	47.2	62.3	82.8	20.0						
		62.9	22.3	7133	1.7				24.0	42.4	56.0	74.4	18.0						
		57.6	24.3	6532	1.9				23.4	41.3	54.6	72.5	17.6						
	PL 16003*	195.3	14.3	11074	0.8	15.0	10.5	160L/2C	28.2	49.8	65.8	87.4	21.2	245	272	213	250	295	428-445
		188.2	14.9	10671	0.8				28.2	49.8	65.8	87.4	21.2						
		155.9	18.0	8840	1.0				24.9	44.0	58.1	77.2	18.7						
		144.0	19.4	8165	1.0				24.9	44.0	58.1	77.2	18.7						
		129.4	21.6	7337	1.1				24.9	44.0	58.1	77.2	18.7						
		124.0	22.6	7031	1.5				23.4	41.3	54.6	72.5	17.6						
		118.5	23.6	6719	1.2				23.4	41.3	54.6	72.5	17.6						
		109.3	25.6	6198	1.7				23.4	41.3	54.6	72.5	17.6						
		94.9	29.5	5381	1.9				22.2	39.2	51.8	68.8	16.7						
		82.1	34.1	4655	2.5				21.0	37.1	49.0	65.1	15.8						
		75.2	37.2	4264	2.7				21.0	37.1	49.0	65.1	15.8						
	PL 10003*	62.9	14.3	11096	0.8	15.0	10.5	200L/6B	30.6	44.7	-	-	22.9	314	-	281	319	364	410-421
		57.6	15.6	10161	0.9				30.6	44.7	-	-	22.9						

* Soğutucu gereklidir / Cooling is required / Kühlung ist erforderlich / È richiesto raffreddamento / Le refroidissement est nécessaire / Se requiere un enfriamiento

P1 (kW)		iges	n2 (rpm)	M2 (Nm)	fs	Pt (20°C) (kW)	Pt (40°C) (kW)	Motor IE2	FR (kN)					~ Kg					mm
									MC	MS	PC	PS	CPC	M...	P...	F	FS	CPC	
18.50	PL 10003*	173.6	16.1	9843	0.8	15.0	10.5	160L/2C	30.6	44.7	-	-	22.9	237	-	204	242	287	410-421
		144.0	19.4	8165	0.9				27.0	39.4	-	-	20.2						
		129.4	21.6	7337	0.8				27.0	39.4	-	-	20.2						
		124.0	22.6	7031	1.0				25.4	37.1	-	-	19.0						
		118.5	23.6	6719	0.8				25.4	37.1	-	-	19.0						
		109.3	25.6	6198	1.1				25.4	37.1	-	-	19.0						
		94.9	29.5	5381	1.3				24.1	35.2	-	-	18.0						
		82.1	34.1	4655	1.7				22.8	33.3	-	-	17.1						
		75.2	37.2	4264	1.8				22.8	33.3	-	-	17.1						
		62.9	44.5	3567	2.1				21.1	30.9	-	-	15.8						
		57.6	48.6	3266	2.2				20.8	30.4	-	-	15.6						
	PL 10003	82.1	17.1	9310	0.9	15.0	10.5	180M/4B	28.9	42.3	-	-	21.7	271	-	238	276	321	410-421
		75.2	18.6	8528	1.0				28.9	42.3	-	-	21.7						
		62.9	22.3	7133	1.2				26.0	38.0	-	-	19.5						
		57.6	24.3	6532	1.3				25.4	37.1	-	-	19.0						
	PL 7003	53.8	26.0	6101	0.8	14.0	9.8	180M/4B	-	-	44.9	53.8	33.6	-	234	216	237	251	392-403
	PL 7003*	102.1	27.4	5789	0.8	14.0	9.8	160L/2C	-	-	44.9	53.8	33.6	-	200	182	203	217	392-403
		93.7	29.9	5313	0.8				-	-	42.6	51.1	31.9						
		78.3	35.8	4440	0.9				-	-	40.3	48.3	30.2						
		71.7	39.1	4066	1.0				-	-	38.5	46.2	28.9						
		64.8	43.2	3674	1.2				-	-	37.4	44.9	28.0						
		53.8	52.0	3051	1.3				-	-	36.8	44.2	27.6						
	PL 5003*	75.2	37.2	4264	0.8	10.0	7.0	160L/2C	12.3	15.8	22.1	25.6	16.5	162	171	153	164	175	370-385
		62.9	44.5	3567	0.8				11.4	14.6	20.5	23.7	15.4						
		57.6	48.6	3266	0.9				11.2	14.4	20.2	23.4	15.1						
		52.1	53.7	2954	0.9				10.9	14.0	19.5	22.6	14.6						
	PL 30002	35.1	25.6	6416	2.5	34.0	23.8	200L/6B	35.1	53.4	-	-	26.3	430	-	389	397	491	496-509
		29.1	30.9	5320	2.9				33.3	50.7	-	-	25.0						
	PL 25002	43.8	20.5	8007	1.6	30.0	21.0	200L/6B	37.4	56.9	-	-	28.0	403	-	367	375	464	476-489
		36.3	24.8	6636	1.9				35.1	53.4	-	-	26.3						
		30.2	29.8	5521	2.8				33.3	50.7	-	-	25.0						
	PL 25002	43.8	32.0	5147	2.3	30.0	21.0	180M/4B	33.3	50.7	-	-	25.0	360	-	324	332	421	476-489
		36.3	38.6	4266	2.7				30.2	45.9	-	-	22.6						
	PL 18002	30.0	30.0	5484	1.9	25.0	17.5	200L/6B	22.2	39.2	51.8	68.8	16.7	323	350	291	328	373	452-469
		24.9	36.1	4552	2.2				21.0	37.1	49.0	65.1	15.8						
		21.4	42.1	3912	2.5				20.1	35.5	46.9	62.3	15.1						
		19.0	47.4	3473	2.7				19.5	34.5	45.5	60.5	14.6						
	PL 18002	30.0	46.7	3526	2.7	25.0	17.5	180M/4B	19.5	34.5	45.5	60.5	14.6	280	307	248	285	330	452-469
	PL 16002	40.5	22.2	7404	0.8	23.0	16.1	200L/6B	24.9	44.0	58.1	77.2	18.7	314	341	282	319	364	428-445
		33.6	26.8	6142	1.3				23.4	41.3	54.6	72.5	17.6						
		28.9	31.1	5283	1.5				22.2	39.2	51.8	68.8	16.7						
		22.1	40.7	4040	2.4				20.1	35.5	46.9	62.3	15.1						
	PL 16002	48.9	28.6	5747	1.1	23.0	16.1	180M/4B	22.8	40.3	53.2	70.7	17.1	271	298	239	276	321	428-445
		40.5	34.6	4759	1.2				11.1	19.6	25.9	34.4	8.3						
		33.6	41.7	3949	1.9				20.1	35.5	46.9	62.3	15.1						
		28.9	48.4	3396	2.1				19.2	33.9	44.8	59.5	14.4						
	PL 16002	48.9	57.3	2873	1.8	23.0	16.1	160L/2C	18.6	32.9	43.4	57.7	14.0	237	264	205	242	287	428-445
		40.5	69.1	2380	2.2				17.1	30.2	39.9	53.0	12.8						
	PL 10002	33.6	26.8	6142	0.9	23.0	16.1	200L/6B	25.4	37.1	-	-	19.0	306	-	273	311	356	410-421
		28.9	31.1	5283	1.0				24.1	35.2	-	-	18.0						
		25.7	35.0	4698	1.4				22.8	33.3	-	-	17.1						
		22.1	40.7	4040	1.6				21.8	31.8	-	-	16.3						
		18.4	48.9	3364	2.2				20.8	30.4	-	-	15.6						
		16.2	55.6	2961	2.1				20.2	29.5	-	-	15.1						
		13.4	67.2	2450	2.8				18.9	27.6	-	-	14.1						
	PL 10002	40.5	34.6	4759	0.8	23.0	16.1	180M/4B	22.8	33.3	-	-	17.1	263	-	230	268	313	410-421
		33.6	41.7	3949	1.3				21.8	31.8	-	-	16.3						
		28.9	48.4	3396	1.4				20.8	30.4	-	-	15.6						
		25.7	54.5	3020	2.0				20.2	29.5	-	-	15.1						
		22.1	63.3	2597	2.3				18.9	27.6	-	-	14.1						
		16.2	86.4	1904	3.0				17.2	25.2	-	-	12.9						
	PL 10002	48.9	57.3	2873	1.3	23.0	16.1	160L/2C	20.2	29.5	-	-	15.1	229	-	196	234	279	410-421
		40.5	69.1	2380	1.5				18.5	27.1	-	-	13.9						
		33.6	83.3	1974	2.3				17.2	25.2	-	-	12.9						
		28.9	96.9	1698	2.6				16.7	24.5	-	-	12.6						

* Soğutucu gereklidir / Cooling is required / Kühlung ist erforderlich / È richiesto raffreddamento / Le refroidissement est nécessaire / Se requiere un enfriamiento

P1 (kW)		iges	n2 (rpm)	M2 (Nm)	fs	Pt (20°C) (kW)	Pt (40°C) (kW)	Motor IE2	FR (kN)					~ Kg					mm
									MC	MS	PC	PS	CPC	M...	P...	F	FS	CPC	
18.50	PL 7002*	26.6	33.8	4863	0.8	18.0	12.6	200L/6B	-	-	40.3	48.3	30.2	-	271	253	274	287	392-403
		22.9	39.3	4186	1.0				-	-	38.5	46.2	28.9						
		20.6	43.7	3766	0.9				-	-	37.4	44.9	28.0						
		18.3	49.2	3345	1.1				-	-	36.8	44.2	27.6						
		13.9	64.7	2541	1.6				-	-	33.4	40.0	25.0						
	PL 7002	36.3	38.6	4266	0.8	18.0	12.6	180M/4B	-	-	38.5	46.2	29.5	-	228	210	231	244	392-403
		30.0	46.7	3526	1.0				-	-	37.4	44.9	28.0						
		26.6	52.6	3126	1.2				-	-	36.2	43.5	27.6						
		22.9	61.1	2691	1.4				-	-	33.9	40.7	25.4						
		20.6	68.0	2421	1.3				-	-	32.8	39.3	24.6						
		18.3	76.5	2151	1.7				-	-	32.2	38.6	24.2						
		13.9	100.7	1633	2.3				-	-	29.3	35.2	22.0						
	PL 7002	50.8	55.1	2985	0.8	18.0	12.6	160L/2C	-	-	35.7	42.8	26.7	-	194	176	197	210	392-403
		42.1	66.5	2474	1.1				-	-	33.4	40.0	25.0						
		36.3	77.1	2133	1.5				-	-	32.2	38.6	24.2						
		30.0	93.3	1763	1.7				-	-	29.6	35.5	22.2						
		26.6	105.3	1563	2.2				-	-	29.3	35.2	22.0						
		22.9	122.3	1346	2.4				-	-	27.9	33.5	20.9						
		20.6	135.9	1210	2.3				-	-	26.5	31.7	19.8						
		18.3	153.0	1075	2.9				-	-	25.6	30.7	19.2						
	PL 5002*	16.2	55.6	2961	1.0	15.0	10.5	200L/6B	10.9	14.0	19.5	22.6	14.6	233	242	224	235	246	370-385
		13.4	67.2	2450	1.2				10.2	13.1	18.3	21.2	13.7						
	PL 5002	23.1	60.6	2715	1.0	15.0	10.5	180M/4B	10.3	13.3	18.6	21.5	13.9	190	199	181	192	203	370-385
		18.4	76.1	2162	1.0				9.8	12.6	17.6	20.4	13.2						
		16.2	86.4	1904	1.5				9.3	11.9	16.7	19.3	12.5						
		13.4	104.5	1575	1.7				8.9	11.5	16.1	18.6	12.0						
	PL 5002*	40.5	69.1	2380	0.8	15.0	10.5	160L/2C	10.0	12.8	18.0	20.8	13.5	156	165	147	158	169	370-385
		34.9	80.2	2051	1.0				9.5	12.2	17.0	19.7	12.8						
		28.9	96.9	1698	1.2				9.0	11.6	16.2	18.8	12.2						
		23.1	121.2	1357	1.7				8.5	10.9	15.3	17.7	11.5						
		18.4	152.2	1081	1.7				7.8	10.0	14.0	16.2	10.5						
		16.2	172.8	952	2.6				7.4	9.6	13.4	15.5	10.0						
		13.4	209.0	787	3.0				7.3	9.3	13.1	15.1	9.8						
	PL 2502*	13.4	67.2	2450	0.8	12.0	8.4	200L/6B	10.2	13.1	18.3	21.2	13.7	227	236	219	229	240	348-363
	PL 2502	16.2	86.4	1904	1.0	12.0	8.4	180M/4B	9.3	11.9	16.7	19.3	12.5	184	193	176	186	197	348-363
		13.4	104.5	1575	1.2				8.9	11.5	16.1	18.6	12.0						
	PL 2502*	28.9	96.9	1698	0.8	12.0	8.4	160L/2C	9.0	11.6	16.2	18.8	12.2	150	159	142	152	163	348-363
		23.1	121.2	1357	1.2				8.5	10.9	15.3	17.7	11.5						
		18.4	152.2	1081	1.2				7.8	10.0	14.0	16.2	10.5						
		16.2	172.8	952	1.8				7.4	9.6	13.4	15.5	10.0						
		13.4	209.0	787	2.1				7.3	9.3	13.1	15.1	9.8						
	PL 1602*	15.2	184.2	893	0.9	8.0	5.6	160L/2C	2.3	2.9	5.1	6.4	3.8	136	138	134	137	141	326-340
		12.6	222.2	740	1.1				2.2	2.7	4.9	6.1	3.6						
	PL 10001	8.67	103.8	1642	1.4	40.0	28.0	200L/6B	16.6	24.2	-	-	12.4	289	-	257	295	340	410-421
		6.75	133.3	1279	2.4				15.0	21.9	-	-	11.2						
	PL 10001	8.67	161.5	1056	2.0	40.0	28.0	180M/4B	14.5	21.1	-	-	10.8	246	-	214	252	297	410-421
	PL 7001	7.00	128.6	1326	1.5	30.0	21.0	200L/6B	-	-	27.9	33.5	20.9	-	259	241	262	275	392-403
		5.80	155.2	1099	2.1				-	-	25.6	30.7	19.2						
		5.00	180.0	947	2.8				-	-	24.4	29.3	18.3						
	PL 7001	7.00	200.0	852	2.1	30.0	21.0	180M/4B	-	-	23.9	28.6	17.9	-	216	198	219	232	392-403
	PL 5001	7.25	124.1	1373	1.0	20.0	14.0	200L/6B	8.5	10.9	15.3	17.7	11.5	225	234	217	227	238	370-385
		6.00	150.0	1137	1.4				8.1	10.4	14.5	16.8	10.9						
		5.17	174.1	979	1.9				7.4	9.6	13.4	15.5	10.0						
		4.13	217.9	782	2.7				7.1	9.1	12.8	14.8	9.6						
	PL 5001	7.25	193.1	883	1.4	20.0	14.0	180M/4B	7.4	9.5	13.2	15.3	9.9	182	191	174	184	195	370-385
		6.00	233.3	731	2.1				7.0	9.0	12.6	14.6	9.5						
		5.17	270.8	630	2.7				6.7	8.6	12.0	13.9	9.0						
	PL 5001	7.25	386.2	441	2.5	20.0	14.0	160L/2C	6.1	7.9	11.0	12.8	8.3	148	157	140	150	161	370-385
	PL 2501	6.00	150.0	1137	1.0	20.0	14.0	200L/6B	8.1	10.4	14.5	16.8	10.9	221	230	212	223	234	348-363
		5.17	174.1	979	1.3				7.4	9.6	13.4	15.5	10.0						
		4.13	217.9	782	1.9				7.1	9.1	12.8	14.8	9.6						
		3.78	238.1	716	2.2				6.9	8.9	12.4	14.4	9.3						
	PL 2501	7.25	193.1	883	0.9	20.0	14.0	180M/4B	7.4	9.5	13.2	15.3	9.9	178	187	169	180	191	348-363
		6.00	233.3	731	1.4				7.0	9.0	12.6	14.6	9.5						
		5.17	270.8	630	1.9				6.7	8.6	12.0	13.9	9.0						
		4.13	339.0	503	2.7				6.3	8.1	11.3	13.1	8.5						

* Soğutucu gereklidir / Cooling is required / Kühlung ist erforderlich / È richiesto raffreddamento / Le refroidissement est nécessaire / Se requiere un enfriamiento

PGR DRIVE TECHNOLOGIES

P1 (kW)		iges	n2 (rpm)	M2 (Nm)	fs	Pt (20°C) (kW)	Pt (40°C) (kW)	Motor IE2	FR (kN)					~ Kg					mm
									MC	MS	PC	PS	CPC	M...	P...	F	FS	CPC	
18.50	PL 2501	7.25 6.00	386.2 466.7	441 365	1.6 2.5	20.0	14.0	160L/2C	6.1 5.8	7.9 7.4	11.0 10.4	12.8 12.0	8.3 7.8	144	153	135	146	157	348-363
	PL 1601*	4.29 3.56	209.8 252.8	813 674	1.0 1.1	12.0	8.4	200L/6B	2.3 2.1	2.8 2.6	5.0 4.6	6.2 5.8	3.7 3.5	207	209	205	208	212	326-340
	PL 1601	5.60 4.29 3.56	250.0 326.3 393.3	682 522 434	0.8 1.4 1.6	12.0	8.4	180M/4B	2.1 2.0 1.9	2.6 2.5 2.3	4.7 4.4 4.1	5.9 5.5 5.1	3.5 3.3 3.1	164	166	162	165	169	326-340
	PL 1601	6.75 5.60 4.29 3.56	414.8 500.0 652.7 786.5	411 341 261 217	1.0 1.4 2.5 2.9	12.0	8.4	160L/2C	1.8 1.8 1.6 1.5	2.3 2.2 2.0 1.9	4.0 3.8 3.5 3.4	5.0 4.8 4.4 4.2	3.0 2.9 2.7 2.5	130	132	128	131	135	326-340
	PL 1001*	4.29 3.56	326.3 393.3	522 434	0.9 1.0	12.0	8.4	180M/4B	2.0 1.9	2.5 2.3	4.4 4.1	5.5 5.1	3.3 3.1	162	164	160	163	167	304-318
	PL 1001*	5.60 4.29 3.56	500.0 652.7 786.5	341 261 217	0.9 1.6 1.9	12.0	8.4	160L/2C	1.8 1.6 1.5	1.9 2.0 2.2	3.4 3.5 3.8	4.2 4.4 4.8	2.5 2.7 2.9	128	130	126	129	133	304-318
22.00	PL 90004	630.8 543.9 504.1 462.6 429.7 398.3 355.8 306.4 270.6 244.6 224.0	1.4 1.7 1.8 1.9 2.1 2.3 2.5 2.9 3.3 3.7 4.0	127698 110106 102049 93648 86988 80631 72028 62027 54780 49516 45346	0.9 0.8 0.8 1.1 1.2 1.2 1.4 1.6 1.7 1.8 2.0	30.0	21.0	200L/6C	310.0 263.5 263.5 263.5 263.5 263.5 240.3 240.3 240.3 224.8 224.8	432.0 367.2 367.2 367.2 367.2 367.2 334.8 334.8 334.8 313.2 313.2	- - - - - - - - - - -	- - - - - - - - - - -	232.5 197.6 197.6 197.6 197.6 197.6 180.2 180.2 180.2 168.6 168.6	884	-	788	810	1058	576-585
	PL 90004	854.4 798.3 742.1 687.5 630.8 585.4 543.9 504.1 462.6 429.7 398.3 355.8 306.4 270.6 244.6 224.0	1.6 1.8 1.9 2.0 2.2 2.4 2.6 2.8 3.0 3.3 3.5 3.9 4.6 5.2 5.7 6.3	111191 103890 96576 89471 82092 76183 70783 65603 60202 55921 51834 46303 39875 35216 31832 29151	0.8 0.8 0.9 0.9 1.2 1.0 1.1 1.2 1.6 1.7 1.8 2.0 2.2 2.5 2.7 2.9	30.0	21.0	180L/4B	263.5 263.5 263.5 263.5 263.5 263.5 240.3 240.3 240.3 240.3 224.8 224.8 209.3 209.3 186.0 186.0	367.2 367.2 367.2 367.2 367.2 367.2 334.8 334.8 334.8 334.8 313.2 313.2 291.6 291.6 259.2 259.2	- - - - - - - - - - - - - - - -	- - - - - - - - - - - - - - - -	197.6 197.6 197.6 197.6 197.6 197.6 180.2 180.2 180.2 180.2 168.6 168.6 156.9 156.9 139.5 139.5	838	-	742	764	1012	576-585
	PL 90004	1623.2 1345.0 1119.0 926.1 854.4 798.3 742.1 687.5 630.8 585.4 543.9 504.1 462.6 429.7	1.7 2.1 2.5 3.0 3.3 3.5 3.8 4.1 4.4 4.8 5.1 5.6 6.1 6.5	105621 87518 72813 60261 55595 51945 48288 44735 41046 38092 35391 32802 30101 27960	0.8 0.9 1.1 1.3 1.3 1.4 1.5 1.6 2.2 1.8 1.9 2.1 2.8 3.0	30.0	21.0	180M/2A	263.5 263.5 263.5 240.3 240.3 224.8 224.8 224.8 224.8 209.3 209.3 186.0 186.0 178.3	367.2 367.2 367.2 334.8 334.8 313.2 313.2 313.2 313.2 291.6 291.6 259.2 259.2 248.4	- - - - - - - - - - - - - -	- - - - - - - - - - - - - -	197.6 197.6 197.6 180.2 180.2 168.6 168.6 168.6 168.6 156.9 156.9 139.5 139.5 133.7	815	-	719	741	989	576-585
	PL 65004	456.4 407.7 364.4 333.7 301.7 280.3 256.7 212.5	2.0 2.2 2.5 2.7 3.0 3.2 3.5 4.2	92393 82534 73769 67554 61076 56743 51966 43018	0.8 0.9 0.9 1.0 1.1 1.2 1.2 1.5	25.0	17.5	200L/6C	132.6 132.6 132.6 120.9 120.9 120.9 113.1 113.1	183.6 183.6 183.6 167.4 167.4 167.4 156.6 156.6	- - - - - - - -	- - - - - - - -	99.5 99.5 99.5 90.7 90.7 90.7 84.8 84.8	696	-	638	652	804	556-569

* Soğutucu gereklidir / Cooling is required / Kühlung ist erforderlich / È richiesto raffreddamento / Le refroidissement est nécessaire / Se requiere un enfriamiento

P1 (kW)		iges	n2 (rpm)	M2 (Nm)	fs	Pt (20°C) (kW)	Pt (40°C) (kW)	Motor IE2	FR (kN)					~ Kg					mm
									MC	MS	PC	PS	CPC	M...	P...	F	FS	CPC	
22.00	PL 65004	694.2	2.0	90342	0.8	25.0	17.5	180L/4B	132.6	183.6	-	-	99.5	650	-	592	606	758	556-569
		640.4	2.2	83341	0.8				132.6	183.6	-	-	99.5						
		556.2	2.5	72383	1.0				120.9	167.4	-	-	90.7						
		515.3	2.7	67061	1.0				120.9	167.4	-	-	90.7						
		456.4	3.1	59395	1.1				120.9	167.4	-	-	90.7						
		407.7	3.4	53058	1.2				120.9	167.4	-	-	90.7						
		364.4	3.8	47423	1.3				113.1	156.6	-	-	84.8						
		333.7	4.2	43427	1.4				113.1	156.6	-	-	84.8						
		301.7	4.6	39263	1.6				105.3	145.8	-	-	79.0						
		280.3	5.0	36478	1.7				105.3	145.8	-	-	79.0						
		256.7	5.5	33407	1.8				105.3	145.8	-	-	79.0						
		212.5	6.6	27655	2.1				89.7	124.2	-	-	67.3						
	PL 65004	1008.1	2.8	65597	1.0	25.0	17.5	180M/2A	120.9	167.4	-	-	90.7	627	-	569	583	735	556-569
		838.8	3.3	54580	1.2				120.9	167.4	-	-	90.7						
		694.2	4.0	45171	1.4				113.1	156.6	-	-	84.8						
		640.4	4.4	41670	1.5				113.1	156.6	-	-	84.8						
		556.2	5.0	36192	1.7				105.3	145.8	-	-	79.0						
		515.3	5.4	33530	1.8				105.3	145.8	-	-	79.0						
		456.4	6.1	29698	2.0				93.6	129.6	-	-	70.2						
		407.7	6.9	26529	2.2				89.7	124.2	-	-	67.3						
		364.4	7.7	23711	2.4				85.8	118.8	-	-	64.4						
		333.7	8.4	21714	2.6				85.8	118.8	-	-	64.4						
		301.7	9.3	19631	2.8				81.9	113.4	-	-	61.4						
		280.3	10.0	18239	3.0				78.0	108.0	-	-	58.5						
	PL 50004*	391.5	2.3	79255	0.8	20.0	14.0	200L/6C	151.3	209.1	-	-	113.5	604	-	546	559	712	536-549
		358.5	2.5	72574	0.8				138.0	190.7	-	-	103.5						
		324.8	2.8	65752	0.9				138.0	190.7	-	-	103.5						
	PL 50004*	616.6	2.3	80244	0.8	20.0	14.0	180L/4B	151.3	209.1	-	-	113.5	558	-	500	513	666	536-549
		591.0	2.4	76912	0.8				151.3	209.1	-	-	113.5						
		564.7	2.5	73489	0.8				151.3	209.1	-	-	113.5						
		511.6	2.7	66579	0.9				138.0	190.7	-	-	103.5						
		471.9	3.0	61413	1.0				138.0	190.7	-	-	103.5						
		432.2	3.2	56246	1.0				138.0	190.7	-	-	103.5						
		391.5	3.6	50949	1.1				129.1	178.4	-	-	96.8						
		358.5	3.9	46655	1.2				129.1	178.4	-	-	96.8						
		324.8	4.3	42269	1.3				129.1	178.4	-	-	96.8						
	PL 50004*	789.4	3.5	51366	0.8	20.0	14.0	180M/2A	129.1	178.4	-	-	96.8	535	-	477	490	643	536-549
		686.4	4.1	44664	1.2				129.1	178.4	-	-	96.8						
		616.6	4.5	40122	1.4				120.2	166.1	-	-	90.1						
		591.0	4.7	38456	1.4				120.2	166.1	-	-	90.1						
		564.7	5.0	36745	1.5				120.2	166.1	-	-	90.1						
		511.6	5.5	33290	1.6				120.2	166.1	-	-	90.1						
		471.9	5.9	30706	1.7				106.8	147.6	-	-	80.1						
		432.2	6.5	28123	1.8				106.8	147.6	-	-	80.1						
		391.5	7.2	25475	2.0				102.4	141.5	-	-	76.8						
		358.5	7.8	23327	2.1				97.9	135.3	-	-	73.4						
		324.8	8.6	21135	2.3				93.5	129.2	-	-	70.1						
	PL 35004*	208.6	4.3	42229	0.8	17.0	11.9	200L/6C	104.4	147.9	-	-	78.3	472	-	436	444	535	516-529
		191.0	4.7	38666	0.9				97.2	137.7	-	-	72.9						
	PL 35004*	328.5	4.3	42751	0.8	17.0	11.9	180L/4B	104.4	147.9	-	-	78.3	426	-	390	398	489	516-529
		303.1	4.6	39445	0.9				97.2	137.7	-	-	72.9						
		277.5	5.0	36114	0.9				97.2	137.7	-	-	72.9						
		251.4	5.6	32717	1.0				86.4	122.4	-	-	64.8						
		230.3	6.1	29971	1.1				86.4	122.4	-	-	64.8						
		208.6	6.7	27147	1.2				82.8	117.3	-	-	62.1						
		191.0	7.3	24857	1.3				82.8	117.3	-	-	62.1						
	PL 35004*	496.0	5.6	32274	1.0	17.0	11.9	180M/2A	86.4	122.4	-	-	64.8	403	-	367	375	466	516-529
		437.1	6.4	28442	1.1				86.4	122.4	-	-	64.8						
		379.6	7.4	24700	1.3				82.8	117.3	-	-	62.1						
		362.7	7.7	23601	1.3				79.2	112.2	-	-	59.4						
		328.5	8.5	21375	1.4				75.6	107.1	-	-	56.7						
		303.1	9.2	19723	1.5				75.6	107.1	-	-	56.7						
		277.5	10.1	18057	1.6				72.0	102.0	-	-	54.0						
		251.4	11.1	16358	1.8				72.0	102.0	-	-	54.0						
		230.3	12.2	14985	1.9				72.0	102.0	-	-	54.0						
		208.6	13.4	13573	2.1				67.7	95.9	-	-	50.8						
		191.0	14.7	12428	2.2				67.7	95.9	-	-	50.8						

* Soğutucu gereklidir / Cooling is required / Kühlung ist erforderlich / È richiesto raffreddamento / Le refroidissement est nécessaire / Se requiere un enfriamiento

P1 (kW)		iges	n2 (rpm)	M2 (Nm)	fs	Pt (20°C) (kW)	Pt (40°C) (kW)	Motor IE2	FR (kN)					~ Kg					mm
									MC	MS	PC	PS	CPC	M...	P...	F	FS	CPC	
22.00	PL 30004*	517.4	5.4	33667	0.8	17.0	11.9	180M/2A	60.8	92.5	-	-	45.6	397	-	356	364	460	496-509
		477.3	5.9	31058	0.9				54.0	82.2	-	-	40.5						
		427.1	6.6	27791	0.9				51.8	78.8	-	-	38.8						
		396.0	7.1	25768	1.0				51.8	78.8	-	-	38.8						
		379.6	7.4	24700	1.0				51.8	78.8	-	-	38.8						
		362.7	7.7	23601	1.1				49.5	75.4	-	-	37.1						
		328.5	8.5	21375	1.2				47.3	71.9	-	-	35.4						
		314.9	8.9	20490	1.2				47.3	71.9	-	-	35.4						
		300.9	9.3	19579	1.3				47.3	71.9	-	-	35.4						
		251.4	11.1	16358	1.5				45.0	68.5	-	-	33.8						
	PL 30004*	251.4	5.6	32717	0.8	17.0	11.9	180L/4B	54.0	82.2	-	-	40.5	420	-	379	387	483	496-509
	PL 25004*	493.2	5.7	32092	0.8	15.0	10.5	180M/2A	54.0	82.2	-	-	40.5	364	-	328	336	425	476-489
		455.5	6.1	29639	0.9				54.0	82.2	-	-	40.5						
		424.3	6.6	27609	0.9				51.8	78.8	-	-	38.8						
		408.4	6.9	26574	1.0				51.8	78.8	-	-	38.8						
		374.0	7.5	24336	1.0				51.8	78.8	-	-	38.8						
		338.8	8.3	22046	1.1				49.5	75.4	-	-	37.1						
	PL 90003	185.5	4.9	38914	1.8	45.0	31.5	200L/6C	209.3	291.6	-	-	156.9	873	-	777	799	1047	576-585
		154.3	5.8	32369	2.1				186.0	259.2	-	-	139.5						
		133.1	6.8	27922	2.4				178.3	248.4	-	-	133.7						
		117.8	7.6	24712	2.6				170.5	237.6	-	-	127.9						
	PL 90003	185.5	7.5	25016	2.6	45.0	31.5	180L/4B	170.5	237.6	-	-	127.9	827	-	731	753	1001	576-585
		154.3	9.1	20809	3.0				162.8	226.8	-	-	122.1						
	PL 65003	167.8	5.4	35201	1.7	35.0	24.5	200L/6C	105.3	145.8	-	-	79.0	684	-	626	640	792	556-569
		139.1	6.5	29180	2.0				93.6	129.6	-	-	70.2						
		115.7	7.8	24272	2.3				85.8	118.8	-	-	64.4						
		99.7	9.0	20915	2.6				81.9	113.4	-	-	61.4						
		88.3	10.2	18524	3.0				78.0	108.0	-	-	58.5						
	PL 65003	167.8	8.3	22629	2.5	35.0	24.5	180L/4B	85.8	118.8	-	-	64.4	638	-	580	594	746	556-569
		139.1	10.1	18759	2.9				78.0	108.0	-	-	58.5						
	PL 50003	247.7	3.6	51963	0.8	25.0	17.5	200L/6C	129.1	178.4	-	-	96.8	596	-	538	551	700	536-549
		205.5	4.4	43110	0.9				129.1	178.4	-	-	96.8						
		170.1	5.3	35684	1.1				120.2	166.1	-	-	90.1						
		157.3	5.7	32999	1.2				106.8	147.6	-	-	80.1						
		138.6	6.5	29076	1.0				106.8	147.6	-	-	80.1						
		130.2	6.9	27313	1.4				102.4	141.5	-	-	76.8						
		116.9	7.7	24523	1.5				97.9	135.3	-	-	73.4						
		108.0	8.3	22656	1.6				97.9	135.3	-	-	73.4						
		93.0	9.7	19510	1.8				89.0	123.0	-	-	66.8						
		84.4	10.7	17705	2.7				89.0	123.0	-	-	66.8						
		74.2	12.1	15566	2.2				89.0	123.0	-	-	66.8						
	PL 50003	293.6	4.8	39595	0.8	25.0	17.5	180L/4B	120.2	166.1	-	-	90.1	550	-	492	505	654	536-549
		247.7	5.7	33405	1.1				106.8	147.6	-	-	80.1						
		205.5	6.8	27714	1.4				102.4	141.5	-	-	76.8						
		170.1	8.2	22940	1.6				97.9	135.3	-	-	73.4						
		157.3	8.9	21213	1.7				93.5	129.2	-	-	70.1						
		138.6	10.1	18691	1.5				89.0	123.0	-	-	66.8						
		130.2	10.8	17559	2.0				89.0	123.0	-	-	66.8						
		116.9	12.0	15765	2.2				86.3	119.3	-	-	64.7						
		108.0	13.0	14565	2.3				86.3	119.3	-	-	64.7						
		93.0	15.1	12542	2.6				83.7	115.6	-	-	62.7						
	PL 50003	293.6	9.5	19797	1.4	25.0	17.5	180M/2A	89.0	123.0	-	-	66.8	527	-	469	482	631	536-549
		247.7	11.3	16702	2.1				89.0	123.0	-	-	66.8						
		205.5	13.6	13857	2.4				83.7	115.6	-	-	62.7						
		170.1	16.5	11470	2.8				83.7	115.6	-	-	62.7						
		157.3	17.8	10607	3.0				73.9	102.1	-	-	55.4						
		138.6	20.2	9346	2.6				73.9	102.1	-	-	55.4						
	PL 35003	164.1	5.5	34425	0.8	23.0	16.1	200L/6C	97.2	137.7	-	-	72.9	464	-	428	436	527	516-529
		158.1	5.7	33166	0.8				86.4	122.4	-	-	64.8						
		136.2	6.6	28572	0.9				82.8	117.3	-	-	62.1						
		121.1	7.4	25404	1.0				82.8	117.3	-	-	62.1						
		108.7	8.3	22803	1.1				79.2	112.2	-	-	59.4						
		99.6	9.0	20894	1.2				75.6	107.1	-	-	56.7						
		88.6	10.2	18587	1.6				72.0	102.0	-	-	54.0						
		83.2	10.8	17454	1.4				72.0	102.0	-	-	54.0						
		70.7	12.7	14831	1.9				67.7	95.9	-	-	50.8						
		64.8	13.9	13594	2.1				67.7	95.9	-	-	50.8						
		58.7	15.3	12314	2.2				67.7	95.9	-	-	50.8						
		53.7	16.8	11265	2.4				67.7	95.9	-	-	50.8						

* Soğutucu gereklidir / Cooling is required / Kühlung ist erforderlich / È richiesto raffreddamento / Le refroidissement est nécessaire / Se requiere un enfriamiento

P1 (kW)		iges	n2 (rpm)	M2 (Nm)	fs	Pt (20°C) (kW)	Pt (40°C) (kW)	Motor IE2	FR (kN)					~ Kg					mm
									MC	MS	PC	PS	CPC	M...	P...	F	FS	CPC	
22.00	PL 35003	230.3	6.1	31058	0.9	23.0	16.1	180L/4B	86.4	122.4	-	-	64.8	418	-	382	390	481	516-529
		191.1	7.3	25772	1.0				82.8	117.3	-	-	62.1						
		164.1	8.5	22130	1.2				75.6	107.1	-	-	56.7						
		158.1	8.9	21321	1.2				75.6	107.1	-	-	56.7						
		136.2	10.3	18368	1.4				72.0	102.0	-	-	54.0						
		121.1	11.6	16331	1.5				72.0	102.0	-	-	54.0						
		108.7	12.9	14659	1.6				69.8	98.9	-	-	52.4						
		99.6	14.1	13432	1.8				67.7	95.9	-	-	50.8						
		88.6	15.8	11949	2.3				67.7	95.9	-	-	50.8						
		83.2	16.8	11220	2.0				64.1	90.8	-	-	48.1						
		70.7	19.8	9535	2.7				59.8	84.7	-	-	44.8						
		64.8	21.6	8739	2.9				59.8	84.7	-	-	44.8						
	PL 35003	230.3	12.2	15529	1.6	23.0	16.1	180M/2A	72.0	102.0	-	-	54.0	395	-	359	367	458	516-529
		191.1	14.7	12886	1.8				67.7	95.9	-	-	50.8						
		164.1	17.1	11065	2.1				67.7	95.9	-	-	50.8						
		158.1	17.7	10661	2.1				59.8	84.7	-	-	44.8						
		136.2	20.6	9184	2.4				59.8	84.7	-	-	44.8						
		121.1	23.1	8166	2.7				56.2	79.6	-	-	42.1						
		108.7	25.8	7330	2.9				56.2	79.6	-	-	42.1						
	PL 30003	134.4	6.7	28195	0.9	23.0	16.1	200L/6C	51.8	78.8	-	-	38.8	458	-	417	425	521	496-509
		124.3	7.2	26076	1.0				51.8	78.8	-	-	38.8						
		102.9	8.7	21586	1.1				47.3	71.9	-	-	35.4						
		88.6	10.2	18587	1.3				45.0	68.5	-	-	33.8						
		73.5	12.2	15419	1.5				45.0	68.5	-	-	33.8						
		64.8	13.9	13594	1.7				42.3	64.4	-	-	31.7						
	PL 30003	134.4	10.4	18125	1.3	23.0	16.1	180L/4B	45.0	68.5	-	-	33.8	412	-	371	379	475	496-509
		124.3	11.3	16763	1.4				45.0	68.5	-	-	33.8						
		102.9	13.6	13877	1.7				43.7	66.4	-	-	32.7						
		88.6	15.8	11949	1.9				42.3	64.4	-	-	31.7						
		73.5	19.0	9912	2.2				37.4	56.9	-	-	28.0						
		64.8	21.6	8739	2.4				37.4	56.9	-	-	28.0						
	PL 30003	134.4	20.8	9063	2.3	23.0	16.1	180M/2A	37.4	56.9	-	-	28.0	389	-	348	356	452	496-509
		124.3	22.5	8381	2.5				35.1	53.4	-	-	26.3						
		102.9	27.2	6938	2.9				35.1	53.4	-	-	26.3						
	PL 25003*	128.4	7.0	26936	1.0	20.0	14.0	200L/6C	51.8	78.8	-	-	38.8	427	-	391	399	488	476-489
		114.4	7.9	23999	0.8				49.5	75.4	-	-	37.1						
		106.3	8.5	22300	1.1				49.5	75.4	-	-	37.1						
		95.0	9.5	19929	0.9				47.3	71.9	-	-	35.4						
		88.0	10.2	18461	1.3				45.0	68.5	-	-	33.8						
		73.1	12.3	15335	1.5				45.0	68.5	-	-	33.8						
		60.5	14.9	12692	1.8				42.3	64.4	-	-	31.7						
		55.4	16.2	11622	1.9				42.3	64.4	-	-	31.7						
	PL 25003*	188.5	7.4	25421	0.8	20.0	14.0	180L/4B	49.5	75.4	-	-	37.1	381	-	345	353	442	476-489
		167.0	8.4	22521	0.9				49.5	75.4	-	-	37.1						
		156.0	9.0	21038	0.9				47.3	71.9	-	-	35.4						
		134.3	10.4	18112	1.0				45.0	68.5	-	-	33.8						
		128.4	10.9	17316	1.4				45.0	68.5	-	-	33.8						
		114.4	12.2	15428	1.2				43.7	66.4	-	-	32.7						
		106.3	13.2	14336	1.6				43.7	66.4	-	-	32.7						
		95.0	14.7	12812	1.4				42.3	64.4	-	-	31.7						
		88.0	15.9	11868	1.9				42.3	64.4	-	-	31.7						
		73.1	19.2	9858	2.2				37.4	56.9	-	-	28.0						
		60.5	23.1	8159	2.6				36.0	54.8	-	-	27.0						
		55.4	25.3	7471	2.8				35.1	53.4	-	-	26.3						
	PL 25003*	262.8	10.7	17720	0.8	20.0	14.0	180M/2A	45.0	68.5	-	-	33.8	358	-	322	330	419	476-489
		226.6	12.4	15280	0.9				45.0	68.5	-	-	33.8						
		218.7	12.8	14747	1.2				42.3	64.4	-	-	31.7						
		188.5	14.9	12710	1.4				42.3	64.4	-	-	31.7						
		167.0	16.8	11261	1.5				42.3	64.4	-	-	31.7						
		156.0	17.9	10519	1.6				37.4	56.9	-	-	28.0						
		134.3	20.8	9056	1.8				37.4	56.9	-	-	28.0						
		128.4	21.8	8658	2.4				37.4	56.9	-	-	28.0						
		114.4	24.5	7714	2.1				35.1	53.4	-	-	26.3						
		106.3	26.3	7168	2.9				35.1	53.4	-	-	26.3						
		95.0	29.5	6406	2.4				33.3	50.7	-	-	25.0						
	PL 18003*	81.4	11.1	17076	0.8	17.0	11.9	200L/6C	30.0	53.0	70.0	93.0	22.5	347	374	316	352	397	452-469
		73.3	12.3	15377	0.9				30.0	53.0	70.0	93.0	22.5						
		65.0	13.8	13636	1.0				28.2	49.8	65.8	87.4	21.2						
		53.8	16.7	11286	1.2				28.2	49.8	65.8	87.4	21.2						

* Soğutucu gereklidir / Cooling is required / Kühlung ist erforderlich / È richiesto raffreddamento / Le refroidissement est nécessaire / Se requiere un enfriamiento

P1 (kW)		iges	n2 (rpm)	M2 (Nm)	fs	Pt (20°C) (kW)	Pt (40°C) (kW)	Motor IE2	FR (kN) MC	MS	PC	PS	CPC	~ Kg M…	P…	F	FS	CPC	mm
22.00	PL 18003*	106.7	13.1	14389	0.9	17.0	11.9	180L/4B	29.1	51.4	67.9	90.2	21.8	301	328	270	306	351	452-469
		94.5	14.8	12744	1.0				28.2	49.8	65.8	87.4	21.2						
		81.4	17.2	10978	1.2				26.7	47.2	62.3	82.8	20.0						
		73.3	19.1	9885	1.3				24.9	44.0	58.1	77.2	18.7						
		65.0	21.5	8766	1.4				24.9	44.0	58.1	77.2	18.7						
		53.8	26.0	7255	1.7				23.4	41.3	54.6	72.5	17.6						
	PL 18003*	180.2	15.5	12151	0.9	17.0	11.9	180M/2A	28.2	49.8	65.8	87.4	21.2	278	305	247	283	328	452-469
		149.1	18.8	10054	1.1				24.9	44.0	58.1	77.2	18.7						
		128.4	21.8	8658	1.2				24.9	44.0	58.1	77.2	18.7						
		106.7	26.2	7195	1.7				23.4	41.3	54.6	72.5	17.6						
		94.5	29.6	6372	1.8				22.2	39.2	51.8	68.8	16.7						
		81.4	34.4	5489	2.1				21.0	37.1	49.0	65.1	15.8						
		73.3	38.2	4943	2.3				20.1	35.5	46.9	62.3	15.1						
		65.0	43.1	4383	2.5				19.5	34.5	45.5	60.5	14.6						
		53.8	52.0	3628	2.9				19.2	33.9	44.8	59.5	14.4						
	PL 16003*	82.1	11.0	17223	0.8	15.0	10.5	200L/6C	30.0	53.0	70.0	93.0	22.5	334	361	302	339	384	428-445
		75.2	12.0	15776	0.9				30.0	53.0	70.0	93.0	22.5						
		62.9	14.3	13195	1.0				28.2	49.8	65.8	87.4	21.2						
		57.6	15.6	12083	1.1				28.2	49.8	65.8	87.4	21.2						
	PL 16003*	109.3	12.8	14740	0.8	15.0	10.5	180L/4B	29.1	51.4	67.9	90.2	21.8	288	315	256	293	338	428-445
		94.9	14.8	12798	0.9				28.2	49.8	65.8	87.4	21.2						
		82.1	17.1	11072	1.2				26.7	47.2	62.3	82.8	20.0						
		75.2	18.6	10141	1.3				26.7	47.2	62.3	82.8	20.0						
		62.9	22.3	8483	1.5				24.0	42.4	56.0	74.4	18.0						
		57.6	24.3	7768	1.6				23.4	41.3	54.6	72.5	17.6						
	PL 16003*	155.9	18.0	10512	0.8	15.0	10.5	180M/2A	24.9	44.0	58.1	77.2	18.7	265	292	233	270	315	428-445
		144.0	19.4	9710	0.9				24.9	44.0	58.1	77.2	18.7						
		129.4	21.6	8725	0.9				24.9	44.0	58.1	77.2	18.7						
		124.0	22.6	8361	1.3				23.4	41.3	54.6	72.5	17.6						
		118.5	23.6	7990	1.0				23.4	41.3	54.6	72.5	17.6						
		109.3	25.6	7370	1.4				23.4	41.3	54.6	72.5	17.6						
		94.9	29.5	6399	1.6				22.2	39.2	51.8	68.8	16.7						
		82.1	34.1	5536	2.1				21.0	37.1	49.0	65.1	15.8						
		75.2	37.2	5071	2.2				21.0	37.1	49.0	65.1	15.8						
		62.9	44.5	4241	2.6				19.5	34.5	45.5	60.5	14.6						
		57.6	48.6	3884	2.8				19.2	33.9	44.8	59.5	14.4						
	PL 10003*	82.1	17.1	11072	0.8	15.0	10.5	180L/4B	28.9	42.3	-	-	21.7	280	-	247	285	330	410-421
		75.2	18.6	10141	0.9				28.9	42.3	-	-	21.7						
		62.9	22.3	8483	1.0				26.0	38.0	-	-	19.5						
		57.6	24.3	7768	1.1				25.4	37.1	-	-	19.0						
	PL 10003*	144.0	19.4	9710	0.8	15.0	10.5	180M/2A	27.0	39.4	-	-	20.2	257	-	224	262	307	410-421
		124.0	22.6	8361	0.9				25.4	37.1	-	-	19.0						
		109.3	25.6	7370	1.0				25.4	37.1	-	-	19.0						
		94.9	29.5	6399	1.1				24.1	35.2	-	-	18.0						
		82.1	34.1	5536	1.4				22.8	33.3	-	-	17.1						
		75.2	37.2	5071	1.5				22.8	33.3	-	-	17.1						
		62.9	44.5	4241	1.8				21.1	30.9	-	-	15.8						
		57.6	48.6	3884	1.9				20.8	30.4	-	-	15.6						
	PL 7003*	78.3	35.8	5280	0.8	14.0	9.8	180M/2A	-	-	40.3	48.3	30.2	-	220	202	223	237	392-403
		71.7	39.1	4835	0.8				-	-	38.5	46.2	28.9						
		64.8	43.2	4369	1.0				-	-	37.4	44.9	28.0						
		53.8	52.0	3628	1.1				-	-	36.8	44.2	27.6						
	PL 5003*	57.6	48.6	3884	0.8	10.0	7.0	180M/2A	11.2	14.4	20.2	23.4	15.1	182	191	173	184	195	370-385
		52.1	53.7	3513	0.8				10.9	14.0	19.5	22.6	14.6						
	PL 50002	40.5	22.2	8804	2.8	38.0	26.6	200L/6C	73.9	102.1	-	-	55.4	580	-	522	535	684	370-385
	PL 30002	35.1	25.6	7630	2.1	34.0	23.8	200L/6C	35.1	53.4	-	-	26.3	442	-	401	409	503	496-509
		29.1	30.9	6326	2.5				33.3	50.7	-	-	25.0						
	PL 30002	35.1	39.9	4905	3.0	34.0	23.8	180L/4B	30.2	45.9	-	-	22.6	396	-	355	363	457	496-509
	PL 25002	43.8	20.5	9522	1.3	30.0	21.0	200L/6C	37.4	56.9	-	-	28.0	415	-	379	387	476	476-489
		36.3	24.8	7891	1.6				35.1	53.4	-	-	26.3						
		30.2	29.8	6565	2.4				33.3	50.7	-	-	25.0						
		26.0	34.6	5652	2.7				31.5	48.0	-	-	23.6						
		23.0	39.1	5000	3.0				30.2	45.9	-	-	22.6						
	PL 25002	43.8	32.0	6121	1.9	30.0	21.0	180L/4B	33.3	50.7	-	-	25.0	369	-	333	341	430	476-489
		36.3	38.6	5073	2.3				30.2	45.9	-	-	22.6						
	PL 18002	30.0	30.0	6522	1.6	25.0	17.5	200L/6C	22.2	39.2	51.8	68.8	16.7	335	362	303	340	385	452-469
		24.9	36.1	5413	1.8				21.0	37.1	49.0	65.1	15.8						
		21.4	42.1	4652	2.1				20.1	35.5	46.9	62.3	15.1						
		19.0	47.4	4130	2.3				19.5	34.5	45.5	60.5	14.6						

* Soğutucu gereklidir / Cooling is required / Kühlung ist erforderlich / È richiesto raffreddamento / Le refroidissement est nécessaire / Se requiere un enfriamiento

P1 (kW)		iges	n2 (rpm)	M2 (Nm)	fs	Pt (20°C) (kW)	Pt (40°C) (kW)	Motor IE2	FR (kN) MC	MS	PC	PS	CPC	~ Kg M…	P…	F	FS	CPC	mm
22.00	PL 18002	30.0 24.9 21.4	46.7 56.2 65.4	4193 3480 2991	2.3 2.6 3.0	25.0	17.5	180L/4B	19.5 18.6 17.4	34.5 32.9 30.7	45.5 43.4 40.6	60.5 57.7 53.9	14.6 14.0 13.1	289	316	257	294	339	452-469
	PL 16002	33.6 28.9 22.1 16.2	26.8 31.1 40.7 55.6	7304 6283 4804 3522	1.1 1.2 2.0 2.6	23.0	16.1	200L/6C	23.4 22.2 20.1 18.6	41.3 39.2 35.5 32.9	54.6 51.8 46.9 43.4	72.5 68.8 62.3 57.7	17.6 16.7 15.1 14.0	326	353	294	331	376	428-445
	PL 16002	48.9 40.5 33.6 28.9 22.1	28.6 34.6 41.7 48.4 63.3	6834 5660 4696 4039 3088	0.9 1.0 1.6 1.8 2.9	23.0	16.1	180L/4B	22.8 11.1 20.1 19.2 17.4	40.3 19.6 35.5 33.9 30.7	53.2 25.9 46.9 44.8 40.6	70.7 34.4 62.3 59.5 53.9	17.1 8.3 15.1 14.4 13.1	280	307	248	285	330	428-445
	PL 16002	48.9 40.5 33.6	57.3 69.1 83.3	3417 2830 2348	1.6 1.8 2.8	23.0	16.1	180M/2A	18.6 17.1 15.9	32.9 30.2 28.1	43.4 39.9 37.1	57.7 53.0 49.3	14.0 12.8 11.9	257	284	225	262	307	428-445
	PL 10002	28.9 25.7 22.1 18.4 16.2 13.4	31.1 35.0 40.7 48.9 55.6 67.2	6283 5587 4804 4000 3522 2913	0.8 1.2 1.4 1.8 1.7 2.4	23.0	16.1	200L/6C	24.1 22.8 21.8 20.8 20.2 18.9	35.2 33.3 31.8 30.4 29.5 27.6	- - - - - -	- - - - - -	18.0 17.1 16.3 15.6 15.1 14.1	318	-	285	323	368	410-421
	PL 10002	33.6 28.9 25.7 22.1 18.4 16.2	41.7 48.4 54.5 63.3 76.1 86.4	4696 4039 3592 3088 2571 2264	1.1 1.2 1.7 1.9 2.6 2.5	23.0	16.1	180L/4B	21.8 20.8 20.2 18.9 18.2 17.2	31.8 30.4 29.5 27.6 26.6 25.2	- - - - - -	- - - - - -	16.3 15.6 15.1 14.1 13.7 12.9	272	-	239	277	322	410-421
	PL 10002	48.9 40.5 33.6 28.9 25.7	57.3 69.1 83.3 96.9 108.9	3417 2830 2348 2019 1796	1.1 1.2 1.9 2.2 3.0	23.0	16.1	180M/2A	20.2 18.5 17.2 16.7 16.6	29.5 27.1 25.2 24.5 24.2	- - - - -	- - - - -	15.1 13.9 12.9 12.6 12.4	249	-	216	254	299	410-421
	PL 7002*	22.9 20.6 18.3 13.9	39.3 43.7 49.2 64.7	4978 4478 3978 3022	0.8 0.8 1.0 1.3	18.0	12.6	200L/6C	- - - -	- - - -	38.5 37.4 36.8 33.4	46.2 44.9 44.2 40.0	28.9 28.0 27.6 25.0	-	283	265	286	299	392-403
	PL 7002*	30.0 26.6 22.9 20.6 18.3 13.9	46.7 52.6 61.1 68.0 76.5 100.7	4193 3717 3200 2879 2557 1943	0.8 1.0 1.2 1.1 1.4 1.9	18.0	12.6	180L/4B	- - - - - -	- - - - - -	37.4 36.2 33.9 32.8 32.2 29.3	44.9 43.5 40.7 39.3 38.6 35.2	28.0 27.6 25.4 24.6 24.2 22.0	-	237	219	240	253	392-403
	PL 7002*	42.1 36.3 30.0 26.6 22.9 20.6 18.3	66.5 77.1 93.3 105.3 122.3 135.9 153.0	2942 2536 2096 1859 1600 1439 1279	0.9 1.2 1.4 1.8 2.0 1.9 2.5	18.0	12.6	180M/2A	- - - - - - -	- - - - - - -	33.4 32.2 29.6 29.3 27.9 26.5 25.6	40.0 38.6 35.5 35.2 33.5 31.7 30.7	25.0 24.2 22.2 22.0 20.9 19.8 19.2	-	214	196	217	230	392-403
	PL 5002	16.2 13.4	55.6 67.2	3522 2913	0.8 1.0	15.0	10.5	200L/6C	10.9 10.2	14.0 13.1	19.5 18.3	22.6 21.2	14.6 13.7	245	254	236	247	258	370-385
	PL 5002*	23.1 18.4 16.2 13.4	60.6 76.1 86.4 104.5	3228 2571 2264 1873	0.8 0.8 1.2 1.4	15.0	10.5	180L/4B	10.3 9.8 9.3 8.9	13.3 12.6 11.9 11.5	18.6 17.6 16.7 16.1	21.5 20.4 19.3 18.6	13.9 13.2 12.5 12.0	199	208	190	201	212	370-385
	PL 5002*	34.9 28.9 23.1 18.4 16.2 13.4	80.2 96.9 121.2 152.2 172.8 209.0	2439 2019 1614 1286 1132 936	0.9 1.0 1.5 1.5 2.2 2.5	15.0	10.5	180M/2A	9.5 9.0 8.5 7.8 7.4 7.3	12.2 11.6 10.9 10.0 9.6 9.3	17.0 16.2 15.3 14.0 13.4 13.1	19.7 18.8 17.7 16.2 15.5 15.1	12.8 12.2 11.5 10.5 10.0 9.8	176	185	167	178	189	370-385
	PL 2502*	16.2 13.4	86.4 104.5	2264 1873	0.8 1.0	12.0	8.4	180L/4B	9.3 8.9	11.9 11.5	16.7 16.1	19.3 18.6	12.5 12.0	193	202	185	195	206	348-363
	PL 2502*	23.1 18.4 16.2 13.4	121.2 152.2 172.8 209.0	1614 1286 1132 936	1.0 1.0 1.5 1.7	12.0	8.4	180M/2A	8.5 7.8 7.4 7.3	10.9 10.0 9.6 9.3	15.3 14.0 13.4 13.1	17.7 16.2 15.5 15.1	11.5 10.5 10.0 9.8	170	179	162	172	183	348-363
	PL 1602*	15.2 12.6	184.2 222.2	1062 880	0.8 0.9	8.0	5.6	180M/2A	2.3 2.2	2.9 2.7	5.1 4.9	6.4 6.1	3.8 3.6	156	158	154	157	161	326-340

* Soğutucu gereklidir / Cooling is required / Kühlung ist erforderlich / È richiesto raffreddamento / Le refroidissement est nécessaire / Se requiere un enfriamiento

P1 (kW)		iges	n2 (rpm)	M2 (Nm)	fs	Pt (20°C) (kW)	Pt (40°C) (kW)	Motor IE2	FR (kN)					~ Kg					mm
									MC	MS	PC	PS	CPC	M...	P...	F	FS	CPC	
22.00	PL 16001	6.75	133.3	1521	3.0	40.0	28.0	200L/6C	13.8	24.4	32.2	42.8	10.4	310	337	278	315	360	428-445
	PL 10001	8.67 6.75	103.8 133.3	1953 1521	1.2 2.0	40.0	28.0	200L/6C	16.6 15.0	24.2 21.9	- -	- -	12.4 11.2	301	-	269	307	352	410-421
	PL 10001	8.67 6.75	161.5 207.4	1256 978	1.7 3.0	40.0	28.0	180L/4B	14.5 13.3	21.1 19.5	- -	- -	10.8 10.0	255	-	223	261	306	410-421
	PL 7001	7.00 5.80 5.00 4.43	128.6 155.2 180.0 203.2	1577 1307 1126 998	1.2 1.8 2.4 3.0	30.0	21.0	200L/6C	- - - -	- - - -	27.9 25.6 24.4 23.9	33.5 30.7 29.3 28.6	20.9 19.2 18.3 17.9	-	271	253	274	287	392-403
	PL 7001	7.00 5.80	200.0 241.4	1014 840	1.8 2.6	30.0	21.0	180L/4B	- -	- -	23.9 22.7	28.6 27.3	17.9 17.0	-	225	207	228	241	392-403
	PL 5001*	7.25 6.00 5.17 4.13 3.78	124.1 150.0 174.1 217.9 238.1	1633 1352 1165 930 852	0.8 1.2 1.6 2.3 2.7	20.0	14.0	200L/6C	8.5 8.1 7.4 7.1 6.9	10.9 10.4 9.6 9.1 8.9	15.3 14.5 13.4 12.8 12.4	17.7 16.8 15.5 14.8 14.4	11.5 10.9 10.0 9.6 9.3	237	246	229	239	250	370-385
	PL 5001*	7.25 6.00 5.17	193.1 233.3 270.8	1050 869 749	1.2 1.7 2.3	20.0	14.0	180L/4B	7.4 7.0 6.7	9.5 9.0 8.6	13.2 12.6 12.0	15.3 14.6 13.9	9.9 9.5 9.0	191	200	183	193	204	370-385
	PL 5001*	7.25	386.2	525	2.1	20.0	14.0	180M/2A	6.1	7.9	11.0	12.8	8.3	168	177	160	170	181	370-385
	PL 2501*	6.00 5.17 4.13 3.78	150.0 174.1 217.9 238.1	1352 1165 930 852	0.8 1.1 1.6 1.9	20.0	14.0	200L/6C	8.1 7.4 7.1 6.9	10.4 9.6 9.1 8.9	14.5 13.4 12.8 12.4	16.8 15.5 14.8 14.4	10.9 10.0 9.6 9.3	233	242	224	235	246	348-363
	PL 2501*	7.25 6.00 5.17 4.13 3.78	193.1 233.3 270.8 339.0 370.4	1050 869 749 598 547	0.8 1.2 1.6 2.3 2.7	20.0	14.0	180L/4B	7.4 7.0 6.7 6.3 6.1	9.5 9.0 8.6 8.1 7.9	13.2 12.6 12.0 11.3 11.0	15.3 14.6 13.9 13.1 12.8	9.9 9.5 9.0 8.5 8.3	187	196	178	189	200	348-363
	PL 2501*	7.25 6.00 5.17	386.2 466.7 541.6	525 434 374	1.4 2.1 2.8	20.0	14.0	180M/2A	6.1 5.8 5.4	7.9 7.4 7.0	11.0 10.4 9.8	12.8 12.0 11.3	8.3 7.8 7.3	164	173	155	166	177	348-363
	PL 1601*	4.29 3.56	209.8 252.8	966 802	0.8 0.9	12.0	8.4	200L/6C	2.3 2.1	2.8 2.6	5.0 4.6	6.2 5.8	3.5 3.7	219	221	217	220	224	326-340
	PL 1601*	4.29 3.56	326.3 393.3	621 516	1.2 1.4	12.0	8.4	180L/4B	2.0 1.9	2.5 2.3	4.4 4.1	5.5 5.1	3.3 3.1	173	175	171	174	178	326-340
	PL 1601*	6.75 5.60 4.29 3.56	414.8 500.0 652.7 786.5	489 405 311 258	0.8 1.2 2.1 2.4	12.0	8.4	180M/2A	1.8 1.8 1.6 1.5	2.3 2.2 2.0 1.9	4.0 3.8 3.5 3.4	5.0 4.8 4.4 4.2	3.0 2.9 2.7 2.5	150	152	148	151	155	326-340
	PL 1001*	4.29 3.56	326.3 393.3	621 516	0.8 0.9	12.0	8.4	180L/4B	2.0 1.9	2.5 2.3	4.4 4.1	5.5 5.1	3.3 3.1	171	173	169	172	176	304-318
	PL 1001*	5.60 4.29 3.56	500.0 652.7 786.5	405 311 258	0.8 1.4 1.6	12.0	8.4	180M/2A	1.8 1.6 1.5	2.2 2.0 1.9	3.8 3.5 3.4	4.8 4.4 4.2	2.9 2.7 2.5	148	150	146	149	153	304-318
30.00	PL 90004	462.6 429.7 398.3 355.8 306.4 270.6 244.6 224.0	1.9 2.1 2.3 2.5 2.9 3.3 3.7 4.0	127702 118620 109952 98219 84582 74700 67522 61836	0.8 0.9 0.9 1.0 1.1 1.3 1.4 1.5	30.0	21.0	225M/6B	263.5 263.5 263.5 240.3 240.3 240.3 224.8 224.8	367.2 367.2 367.2 334.8 334.8 334.8 313.2 313.2	- - - - - - - -	- - - - - - - -	197.6 197.6 197.6 180.2 180.2 180.2 168.6 168.6	952	-	856	878	1126	576-585
	PL 90004	630.8 585.4 543.9 504.1 462.6 429.7 398.3 355.8 306.4 270.6 244.6 224.0	2.2 2.4 2.6 2.8 3.0 3.3 3.5 3.9 4.6 5.2 5.7 6.3	111943 103886 96522 89459 82094 76256 70683 63141 54374 48021 43407 39752	0.9 0.8 0.8 0.9 1.2 1.2 1.3 1.4 1.6 1.8 2.0 2.1	30.0	21.0	200L/4D	263.5 263.5 240.3 240.3 240.3 240.3 224.8 224.8 209.3 209.3 186.0 186.0	367.2 367.2 334.8 334.8 334.8 334.8 313.2 313.2 291.6 291.6 259.2 259.2	- - - - - - - - - - - -	- - - - - - - - - - - -	197.6 197.6 180.2 180.2 180.2 180.2 168.6 168.6 156.9 156.9 139.5 139.5	896	-	800	822	1070	576-585

* Soğutucu gereklidir / Cooling is required / Kühlung ist erforderlich / È richiesto raffreddamento / Le refroidissement est nécessaire / Se requiere un enfriamiento

P1 (kW)		iges	n2 (rpm)	M2 (Nm)	fs	Pt (20°C) (kW)	Pt (40°C) (kW)	Motor IE2	FR (kN)					~ Kg					mm
									MC	MS	PC	PS	CPC	M...	P...	F	FS	CPC	
30.00		1119.0	2.5	99290	0.8				263.5	367.2	-	-	197.6						
		926.1	3.0	82174	0.9				240.3	334.8	-	-	180.2						
		854.4	3.3	75812	1.0				240.3	334.8	-	-	180.2						
		798.3	3.5	70834	1.0				224.8	313.2	-	-	168.6						
		742.1	3.8	65847	1.1				224.8	313.2	-	-	168.6						
		687.5	4.1	61003	1.2				224.8	313.2	-	-	168.6						
		630.8	4.4	55972	1.6				224.8	313.2	-	-	168.6						
	PL 90004	585.4	4.8	51943	1.3	30.0	21.0	200L/2B	209.3	291.6	-	-	156.9	881	-	785	807	1055	576-585
		543.9	5.1	48261	1.4				209.3	291.6	-	-	156.9						
		504.1	5.6	44729	1.5				186.0	259.2	-	-	139.5						
		462.6	6.1	41047	2.1				186.0	259.2	-	-	139.5						
		429.7	6.5	38128	2.2				178.3	248.4	-	-	133.7						
		398.3	7.0	35342	2.3				178.3	248.4	-	-	133.7						
		355.8	7.9	31571	2.6				170.5	237.6	-	-	127.9						
		306.4	9.1	27187	2.9				162.8	226.8	-	-	122.1						
		1008.1	2.8	89450	0.8				120.9	167.4	-	-	90.7						
		838.8	3.3	74428	0.9				120.9	167.4	-	-	90.7						
		694.2	4.0	61597	1.0				113.1	156.6	-	-	84.8						
		640.4	4.4	56823	1.1				113.1	156.6	-	-	84.8						
		556.2	5.0	49352	1.2				105.3	145.8	-	-	79.0						
		515.3	5.4	45723	1.3				105.3	145.8	-	-	79.0						
		456.4	6.1	40497	1.5				93.6	129.6	-	-	70.2						
	PL 65004*	407.7	6.9	36176	1.6	25.0	17.5	200L/2B	89.7	124.2	-	-	67.3	693	-	635	649	801	556-569
		364.4	7.7	32334	1.8				85.8	118.8	-	-	64.4						
		333.7	8.4	29610	1.9				85.8	118.8	-	-	64.4						
		301.7	9.3	26770	2.1				81.9	113.4	-	-	61.4						
		280.3	10.0	24871	2.2				78.0	108.0	-	-	58.5						
		256.7	10.9	22777	2.4				78.0	108.0	-	-	58.5						
		212.5	13.2	18855	2.8				73.3	101.5	-	-	55.0						
		301.7	3.0	83285	0.8				120.9	167.4	-	-	90.7						
	PL 65004*	280.3	3.2	77377	0.9	25.0	17.5	225M/6B	120.9	167.4	-	-	90.7	764	-	706	720	872	556-569
		256.7	3.5	70863	0.9				113.1	156.6	-	-	84.8						
		212.5	4.2	58661	1.1				113.1	156.6	-	-	84.8						
		456.4	3.1	80994	0.8				120.9	167.4	-	-	90.7						
		407.7	3.4	72351	0.9				120.9	167.4	-	-	90.7						
		364.4	3.8	64667	1.0				113.1	156.6	-	-	84.8						
	PL 65004*	333.7	4.2	59219	1.1	25.0	17.5	200L/4D	113.1	156.6	-	-	84.8	708	-	650	664	816	556-569
		301.7	4.6	53540	1.2				105.3	145.8	-	-	79.0						
		280.3	5.0	49743	1.2				105.3	145.8	-	-	79.0						
		256.7	5.5	45555	1.3				105.3	145.8	-	-	79.0						
		212.5	6.6	37711	1.6				89.7	124.2	-	-	67.3						
		432.2	3.2	76699	0.8				138.0	190.7	-	-	103.5						
	PL 50004*	391.5	3.6	69476	0.8	20.0	14.0	200L/4D	129.1	178.4	-	-	96.8	616	-	558	571	724	536-549
		358.5	3.9	63620	0.9				129.1	178.4	-	-	96.8						
		324.8	4.3	57640	1.0				129.1	178.4	-	-	96.8						
		686.4	4.1	60905	0.9				129.1	178.4	-	-	96.8						
		616.6	4.5	54712	1.0				120.2	166.1	-	-	90.1						
		591.0	4.7	52440	1.0				120.2	166.1	-	-	90.1						
		564.7	5.0	50106	1.1				120.2	166.1	-	-	90.1						
	PL 50004*	511.6	5.5	45395	1.2	20.0	14.0	200L/2B	120.2	166.1	-	-	90.1	601	-	543	556	709	536-549
		471.9	5.9	41872	1.2				106.8	147.6	-	-	80.1						
		432.2	6.5	38350	1.3				106.8	147.6	-	-	80.1						
		391.5	7.2	34738	1.5				102.4	141.5	-	-	76.8						
		358.5	7.8	31810	1.6				97.9	135.3	-	-	73.4						
		324.8	8.6	28820	1.7				93.5	129.2	-	-	70.1						
		230.3	6.1	40870	0.8				86.4	122.4	-	-	64.8						
	PL 35004*	208.6	6.7	37019	0.9	17.0	11.9	200L/4D	82.8	117.3	-	-	62.1	484	-	448	456	547	516-529
		191.0	7.3	33895	0.9				82.8	117.3	-	-	62.1						
		437.1	6.4	38784	0.8				86.4	122.4	-	-	64.8						
		379.6	7.4	33682	0.9				82.8	117.3	-	-	62.1						
		362.7	7.7	32183	1.0				79.2	112.2	-	-	59.4						
		328.5	8.5	29148	1.0				75.6	107.1	-	-	56.7						
		303.1	9.2	26894	1.1				75.6	107.1	-	-	56.7						
	PL 35004*	277.5	10.1	24623	1.2	17.0	11.9	200L/2B	72.0	102.0	-	-	54.0	469	-	433	441	532	516-529
		251.4	11.1	22307	1.3				72.0	102.0	-	-	54.0						
		230.3	12.2	20435	1.4				72.0	102.0	-	-	54.0						
		208.6	13.4	18509	1.5				67.7	95.9	-	-	50.8						
		191.0	14.7	16948	1.6				67.7	95.9	-	-	50.8						
		379.6	7.4	33682	0.8				51.8	78.8	-	-	38.8						
		362.7	7.7	32183	0.8				49.5	75.4	-	-	37.1						
	PL 30004*	328.5	8.5	29148	0.9	17.0	11.9	200L/2B	47.3	71.9	-	-	35.4	463	-	422	430	526	496-509
		314.9	8.9	27941	0.9				47.3	71.9	-	-	35.4						
		300.9	9.3	26699	0.9				47.3	71.9	-	-	35.4						
		251.4	11.1	22307	1.1				45.0	68.5	-	-	33.8						

* Soğutucu gereklidir / Cooling is required / Kühlung ist erforderlich / È richiesto raffreddamento / Le refroidissement est nécessaire / Se requiere un enfriamiento

P1 (kW)		iges	n2 (rpm)	M2 (Nm)	fs	Pt (20°C) (kW)	Pt (40°C) (kW)	Motor IE2	FR (kN) MC	MS	PC	PS	CPC	~ Kg M…	P…	F	FS	CPC	mm
30.00	PL 25004*	374.0	7.5	33185	0.8	15.0	10.5	200L/2B	51.8	78.8	-	-	38.8	430	-	394	402	491	476-489
		338.8	8.3	30062	0.8				49.5	75.4	-	-	37.1						
	PL 90003	185.5	4.9	53065	1.3	45.0	31.5	225M/6B	209.3	291.6	-	-	156.9	941	-	845	867	1115	576-585
		154.3	5.8	44140	1.6				186.0	259.2	-	-	139.5						
		133.1	6.8	38075	1.7				178.3	248.4	-	-	133.7						
		121.9	7.4	34871	2.3				178.3	248.4	-	-	133.7						
		117.8	7.6	33698	1.9				170.5	237.6	-	-	127.9						
		105.1	8.6	30065	2.7				162.8	226.8	-	-	122.1						
		93.1	9.7	26633	3.0				155.0	216.0	-	-	116.3						
	PL 90003	185.5	7.5	34113	1.9	45.0	31.5	200L/4D	170.5	237.6	-	-	127.9	885	-	789	811	1059	576-585
		154.3	9.1	28376	2.2				162.8	226.8	-	-	122.1						
		133.1	10.5	24477	2.5				155.0	216.0	-	-	116.3						
		117.8	11.9	21663	2.8				150.4	209.5	-	-	112.8						
	PL 65003	167.8	5.4	48002	1.3	35.0	24.5	225M/6B	105.3	145.8	-	-	79.0	752	-	694	708	860	556-569
		139.1	6.5	39792	1.5				93.6	129.6	-	-	70.2						
		115.7	7.8	33098	1.7				85.8	118.8	-	-	64.4						
		99.7	9.0	28521	1.9				81.9	113.4	-	-	61.4						
		88.3	10.2	25260	2.2				78.0	108.0	-	-	58.5						
		73.1	12.3	20911	2.5				78.0	108.0	-	-	58.5						
		68.0	13.2	19452	2.7				73.3	101.5	-	-	55.0						
	PL 65003	167.8	8.3	30858	1.8	35.0	24.5	200L/4D	85.8	118.8	-	-	64.4	696	-	638	652	804	556-569
		139.1	10.1	25580	2.1				78.0	108.0	-	-	58.5						
		115.7	12.1	21277	2.5				75.7	104.8	-	-	56.7						
		99.7	14.0	18335	2.8				73.3	101.5	-	-	55.0						
	PL 50003*	170.1	5.3	48660	0.8	25.0	17.5	225M/6B	120.2	166.1	-	-	90.1	664	-	606	619	768	536-549
		157.3	5.7	44998	0.9				106.8	147.6	-	-	80.1						
		138.6	6.5	39649	0.8				106.8	147.6	-	-	80.1						
		130.2	6.9	37246	1.0				102.4	141.5	-	-	76.8						
		116.9	7.7	33441	1.1				97.9	135.3	-	-	73.4						
		108.0	8.3	30895	1.2				97.9	135.3	-	-	73.4						
		93.0	9.7	26604	1.3				89.0	123.0	-	-	66.8						
		84.4	10.7	24144	2.0				89.0	123.0	-	-	66.8						
		74.2	12.1	21226	1.6				89.0	123.0	-	-	66.8						
		64.0	14.1	18308	2.5				83.7	115.6	-	-	62.7						
		53.1	16.9	15190	2.9				83.7	115.6	-	-	62.7						
	PL 50003	247.7	5.7	45552	0.8	25.0	17.5	200L/4D	106.8	147.6	-	-	80.1	608	-	550	563	712	536-549
		205.5	6.8	37791	1.0				102.4	141.5	-	-	76.8						
		170.1	8.2	31281	1.2				97.9	135.3	-	-	73.4						
		157.3	8.9	28927	1.2				93.5	129.2	-	-	70.1						
		138.6	10.1	25488	1.1				89.0	123.0	-	-	66.8						
		130.2	10.8	23944	1.5				89.0	123.0	-	-	66.8						
		116.9	12.0	21498	1.6				86.3	119.3	-	-	64.7						
		108.0	13.0	19861	1.7				86.3	119.3	-	-	64.7						
		93.0	15.1	17103	1.9				83.7	115.6	-	-	62.7						
		84.4	16.6	15521	2.8				83.7	115.6	-	-	62.7						
		74.2	18.9	13645	2.3				79.2	109.5	-	-	59.4						
	PL 50003*	293.6	9.5	26996	1.0	25.0	17.5	200L/2B	89.0	123.0	-	-	66.8	593	-	535	548	697	536-549
		247.7	11.3	22776	1.5				89.0	123.0	-	-	66.8						
		205.5	13.6	18896	1.8				83.7	115.6	-	-	62.7						
		170.1	16.5	15641	2.1				83.7	115.6	-	-	62.7						
		157.3	17.8	14464	2.2				73.9	102.1	-	-	55.4						
		138.6	20.2	12744	1.9				73.9	102.1	-	-	55.4						
		130.2	21.5	11972	2.5				73.9	102.1	-	-	55.4						
		116.9	24.0	10749	2.8				69.4	95.9	-	-	52.1						
		108.0	25.9	9931	3.0				69.4	95.9	-	-	52.1						
	PL 35003*	191.1	7.3	35143	0.8	23.0	16.1	200L/4D	82.8	117.3	-	-	62.1	476	-	440	448	539	516-529
		164.1	8.5	30178	0.9				75.6	107.1	-	-	56.7						
		158.1	8.9	29074	0.9				75.6	107.1	-	-	56.7						
		136.2	10.3	25047	1.0				72.0	102.0	-	-	54.0						
		121.1	11.6	22270	1.1				72.0	102.0	-	-	54.0						
		108.7	12.9	19990	1.2				69.8	98.9	-	-	52.4						
		99.6	14.1	18316	1.3				67.7	95.9	-	-	50.8						
		88.6	15.8	16293	1.7				67.7	95.9	-	-	50.8						
		83.2	16.8	15300	1.5				64.1	90.8	-	-	48.1						
		70.7	19.8	13002	2.0				59.8	84.7	-	-	44.8						
		64.8	21.6	11917	2.2				59.8	84.7	-	-	44.8						
		58.7	23.9	10795	2.3				56.2	79.6	-	-	42.1						
		53.7	26.1	9875	2.5				56.2	79.6	-	-	42.1						

* Soğutucu gereklidir / Cooling is required / Kühlung ist erforderlich / È richiesto raffreddamento / Le refroidissement est nécessaire / Se requiere un enfriamiento

P1 (kW)		iges	n2 (rpm)	M2 (Nm)	fs	Pt (20°C) (kW)	Pt (40°C) (kW)	Motor IE2	FR (kN)					~ Kg					mm
									MC	MS	PC	PS	CPC	M...	P...	F	FS	CPC	
30.00	PL 35003*	121.1	7.4	34642	0.8	23.0	16.1	225M/6B	82.8	117.3	-	-	62.1	532	-	496	504	595	516-529
		108.7	8.3	31095	0.8				79.2	112.2	-	-	59.4						
		99.6	9.0	28492	0.9				75.6	107.1	-	-	56.7						
		88.6	10.2	25345	1.2				72.0	102.0	-	-	54.0						
		83.2	10.8	23801	1.0				72.0	102.0	-	-	54.0						
		70.7	12.7	20225	1.4				67.7	95.9	-	-	50.8						
		64.8	13.9	18537	1.5				67.7	95.9	-	-	50.8						
		58.7	15.3	16792	1.6				67.7	95.9	-	-	50.8						
		53.7	16.8	15362	1.8				67.7	95.9	-	-	50.8						
	PL 35003*	230.3	12.2	21176	1.2	23.0	16.1	200L/2B	72.0	102.0	-	-	54.0	461	-	425	433	524	516-529
		191.1	14.7	17572	1.3				67.7	95.9	-	-	50.8						
		164.1	17.1	15089	1.5				67.7	95.9	-	-	50.8						
		158.1	17.7	14537	1.6				59.8	84.7	-	-	44.8						
		136.2	20.6	12523	1.8				59.8	84.7	-	-	44.8						
		121.1	23.1	11135	1.9				56.2	79.6	-	-	42.1						
		108.7	25.8	9995	2.1				56.2	79.6	-	-	42.1						
		99.6	28.1	9158	2.3				53.3	75.5	-	-	40.0						
		88.6	31.6	8147	3.0				53.3	75.5	-	-	40.0						
		83.2	33.7	7650	2.7				50.4	71.4	-	-	37.8						
	PL 30003*	102.9	8.7	29436	0.8	23.0	16.1	225M/6B	47.3	71.9	-	-	35.4	526	-	485	493	589	496-509
		88.6	10.2	25345	1.0				45.0	68.5	-	-	33.8						
		73.5	12.2	21026	1.1				45.0	68.5	-	-	33.8						
		64.8	13.9	18537	1.2				42.3	64.4	-	-	31.7						
	PL 30003*	134.4	10.4	24716	1.0	23.0	16.1	200L/4D	45.0	68.5	-	-	33.8	470	-	429	437	533	496-509
		124.3	11.3	22859	1.0				45.0	68.5	-	-	33.8						
		102.9	13.6	18923	1.2				43.7	66.4	-	-	32.7						
		88.6	15.8	16293	1.4				42.3	64.4	-	-	31.7						
		73.5	19.0	13517	1.6				37.4	56.9	-	-	28.0						
		64.8	21.6	11917	1.8				37.4	56.9	-	-	28.0						
	PL 30003*	134.4	20.8	12358	1.7	23.0	16.1	200L/2B	37.4	56.9	-	-	28.0	455	-	414	422	518	496-509
		124.3	22.5	11429	1.8				35.1	53.4	-	-	26.3						
		102.9	27.2	9462	2.2				35.1	53.4	-	-	26.3						
		88.6	31.6	8147	2.4				33.3	50.7	-	-	25.0						
		73.5	38.1	6758	2.9				30.2	45.9	-	-	22.6						
	PL 25003*	106.3	8.5	30409	0.8	20.0	14.0	225M/6B	49.5	75.4	-	-	37.1	495	-	459	467	556	476-489
		88.0	10.2	25174	1.0				45.0	68.5	-	-	33.8						
		73.1	12.3	20911	1.1				45.0	68.5	-	-	33.8						
		60.5	14.9	17307	1.3				42.3	64.4	-	-	31.7						
		55.4	16.2	15848	1.4				42.3	64.4	-	-	31.7						
	PL 25003*	134.3	10.4	24698	0.8	20.0	14.0	200L/4D	45.0	68.5	-	-	33.8	439	-	403	411	500	476-489
		128.4	10.9	23613	1.0				45.0	68.5	-	-	33.8						
		114.4	12.2	21038	0.9				43.7	66.4	-	-	32.7						
		106.3	13.2	19548	1.2				43.7	66.4	-	-	32.7						
		95.0	14.7	17470	1.0				42.3	64.4	-	-	31.7						
		88.0	15.9	16183	1.4				42.3	64.4	-	-	31.7						
		73.1	19.2	13443	1.6				37.4	56.9	-	-	28.0						
		60.5	23.1	11126	1.9				36.0	54.8	-	-	27.0						
		55.4	25.3	10188	2.0				35.1	53.4	-	-	26.3						
	PL 25003*	218.7	12.8	20109	0.9	20.0	14.0	200L/2B	42.3	64.4	-	-	31.7	424	-	388	396	485	476-489
		188.5	14.9	17332	1.0				42.3	64.4	-	-	31.7						
		167.0	16.8	15356	1.1				42.3	64.4	-	-	31.7						
		156.0	17.9	14344	1.2				37.4	56.9	-	-	28.0						
		134.3	20.8	12349	1.3				37.4	56.9	-	-	28.0						
		128.4	21.8	11806	1.8				37.4	56.9	-	-	28.0						
		114.4	24.5	10519	1.5				35.1	53.4	-	-	26.3						
		106.3	26.3	9774	2.1				35.1	53.4	-	-	26.3						
		95.0	29.5	8735	1.8				33.3	50.7	-	-	25.0						
		88.0	31.8	8092	2.5				33.3	50.7	-	-	25.0						
		73.1	38.3	6721	2.9				30.2	45.9	-	-	22.6						
	PL 18003*	94.5	14.8	17378	0.8	17.0	11.9	200L/4D	23.4	49.8	65.8	87.4	21.2	359	386	328	364	409	452-469
		81.4	17.2	14969	0.9				24.9	47.2	62.3	82.8	20.0						
		73.3	19.1	13480	0.9				24.9	44.0	58.1	77.2	18.7						
		65.0	21.5	11953	1.0				26.7	44.0	58.1	77.2	18.7						
		53.8	26.0	9894	1.2				28.2	41.3	54.6	72.5	17.6						
	PL 18003*	53.8	16.7	15390	0.8	17.0	11.9	225M/6B	28.2	49.8	65.8	87.4	21.2	415	442	384	420	465	452-469
	PL 18003*	149.1	18.8	13710	0.8	17.0	11.9	200L/2B	24.9	44.0	58.1	77.2	18.7	344	371	313	349	394	452-469
		128.4	21.8	11806	0.9				24.9	44.0	58.1	77.2	18.7						
		106.7	26.2	9811	1.2				23.4	41.3	54.6	72.5	17.6						
		94.5	29.6	8689	1.4				22.2	39.2	51.8	68.8	16.7						
		81.4	34.4	7485	1.5				21.0	37.1	49.0	65.1	15.8						
		73.3	38.2	6740	1.7				20.1	35.5	46.9	62.3	15.1						
		65.0	43.1	5977	1.8				19.5	34.5	45.5	60.5	14.6						
		53.8	52.0	4947	2.1				19.2	33.9	44.8	59.5	14.4						

* Soğutucu gereklidir / Cooling is required / Kühlung ist erforderlich / È richiesto raffreddamento / Le refroidissement est nécessaire / Se requiere un enfriamiento

P1 (kW)		iges	n2 (rpm)	M2 (Nm)	fs	Pt (20°C) (kW)	Pt (40°C) (kW)	Motor IE2	FR (kN)					~ Kg					mm
									MC	MS	PC	PS	CPC	M...	P...	F	FS	CPC	
30.00	PL 16003*	57.6	15.6	16477	0.8	15.0	10.5	225M/6B	28.2	49.8	65.8	87.4	21.2	402	429	370	407	452	428-445
	PL 16003*	82.1 75.2 62.9 57.6	17.1 18.6 22.3 24.3	15098 13829 11567 10593	0.9 0.9 1.1 1.1	15.0	10.5	200L/4D	26.7 26.7 24.0 23.4	47.2 47.2 42.4 41.3	62.3 62.3 56.0 54.6	82.8 82.8 74.4 72.5	20.0 20.0 18.0 17.6	346	373	314	351	396	428-445
	PL 16003*	124.0 109.3 94.9 82.1 75.2 62.9 57.6	22.6 25.6 29.5 34.1 37.2 44.5 48.6	11402 10050 8726 7549 6915 5784 5296	0.9 1.0 1.2 1.5 1.6 1.9 2.0	15.0	10.5	200L/2B	23.4 23.4 22.2 21.0 21.0 19.5 19.2	41.3 41.3 39.2 37.1 37.1 34.5 33.9	54.6 54.6 51.8 49.0 49.0 45.5 44.8	72.5 72.5 68.8 65.1 65.1 60.5 59.5	17.6 17.6 16.7 15.8 15.8 14.6 14.4	331	358	299	336	381	428-445
	PL 10003*	57.6	24.3	10593	0.8	15.0	10.5	200L/4D	25.4	37.1	-	-	19.0	338	-	305	343	388	410-421
	PL 10003*	94.9 82.1 75.2 62.9 57.6	29.5 34.1 37.2 44.5 48.6	8726 7549 6915 5784 5296	0.8 1.0 1.1 1.3 1.4	15.0	10.5	200L/2B	24.1 22.8 22.8 21.1 20.8	35.2 33.3 33.3 30.9 30.4	- - - - -	- - - - -	18.0 17.1 17.1 15.8 15.6	323	-	290	328	373	410-421
	PL 7003*	53.8	52.0	4947	0.8	14.0	9.8	200L/2B	-	-	36.8	44.2	27.6	-	286	268	289	303	392-403
	PL 50002	40.5 33.6	22.2 26.8	12006 9960	2.0 2.4	38.0	26.6	225M/6B	73.9 69.4	102.1 95.9	- -	- -	55.4 52.1	648	-	590	603	752	536-549
	PL 50002	40.5	34.6	7718	3.0	38.0	26.6	200L/4D	62.3	86.1	-	-	46.7	592	-	534	547	696	536-549
	PL 35002	27.0	33.3	8004	2.6	54.0	37.8	225M/6B	50.4	71.4	-	-	37.8	516	-	480	488	579	516-529
	PL 30002	35.1 29.1 22.4	25.6 30.9 40.2	10405 8626 6640	1.5 1.8 2.9	34.0	23.8	225M/6B	35.1 33.3 30.2	53.4 50.7 45.9	- - -	- - -	26.3 25.0 22.6	510	-	469	477	571	496-509
	PL 30002	35.1 29.1	39.9 48.1	6689 5546	2.2 2.6	34.0	23.8	200L/4D	30.2 28.8	45.9 43.8	- -	- -	22.6 21.6	454	-	413	421	515	496-509
	PL 25002	43.8 36.3 30.2 26.0 23.0	20.5 24.8 29.8 34.6 39.1	12984 10761 8952 7707 6818	1.0 1.1 1.7 2.0 2.2	30.0	21.0	225M/6B	37.4 35.1 33.3 31.5 30.2	56.9 53.4 50.7 48.0 45.9	- - - - -	- - - - -	28.0 26.3 25.0 23.6 22.6	483	-	447	455	544	476-489
	PL 25002	43.8 36.3 30.2 26.0	32.0 38.6 46.4 53.8	8347 6918 5755 4955	1.4 1.7 2.5 2.8	30.0	21.0	200L/4D	33.3 30.2 29.3 27.9	50.7 45.9 44.5 42.5	- - - -	- - - -	25.0 22.6 21.9 20.9	427	-	391	399	488	476-489
	PL 25002	43.8 36.3	63.9 77.1	4173 3459	2.5 2.9	30.0	21.0	200L/2B	26.1 25.2	39.7 38.4	- -	- -	19.6 18.9	385	-	349	357	446	476-489
	PL 18002*	30.0 24.9 21.4 19.0 15.7 13.0	30.0 36.1 42.1 47.4 57.3 69.2	8893 7381 6344 5632 4654 3854	1.2 1.4 1.5 1.7 2.3 2.6	25.0	17.5	225M/6B	22.2 21.0 20.1 19.5 18.6 17.1	39.2 37.1 35.5 34.5 32.9 30.2	51.8 49.0 46.9 45.5 43.4 39.9	68.8 65.1 62.3 60.5 57.7 53.0	16.7 15.8 15.1 14.6 14.0 12.8	403	430	371	408	453	452-469
	PL 18002*	30.0 24.9 21.4 19.0	46.7 56.2 65.4 73.7	5717 4745 4078 3621	1.7 1.9 2.2 2.4	25.0	17.5	200L/4D	19.5 18.6 17.4 16.8	34.5 32.9 30.7 29.7	45.5 43.4 40.6 39.2	60.5 57.7 53.9 52.1	14.6 14.0 13.1 12.6	347	374	315	352	397	452-469
	PL 18002*	30.0	93.3	2859	2.9	25.0	17.5	200L/2B	15.5	27.3	36.1	47.9	11.6	332	359	300	337	382	452-469
	PL 16002*	33.6 28.9 22.1 16.2 13.4	26.8 31.1 40.7 55.6 67.2	9960 8567 6551 4802 3972	0.8 0.9 1.5 1.9 2.6	23.0	16.1	225M/6B	23.4 22.2 20.1 18.6 17.4	41.3 39.2 35.5 32.9 30.7	54.6 51.8 46.9 43.4 40.6	72.5 68.8 62.3 57.7 53.9	17.6 16.7 15.1 14.0 13.1	394	421	362	399	444	428-445
	PL 16002*	40.5 33.6 28.9 22.1 16.2	34.6 41.7 48.4 63.3 86.4	7718 6403 5507 4212 3087	0.8 1.2 1.3 2.1 2.8	23.0	16.1	200L/4D	11.1 20.1 19.2 17.4 15.9	19.6 35.5 33.9 30.7 28.1	25.9 46.9 44.8 40.6 37.1	34.4 62.3 59.5 53.9 49.3	8.3 15.1 14.4 13.1 11.9	338	365	306	343	388	428-445
	PL 16002*	48.9 40.5 33.6 28.9	57.3 69.1 83.3 96.9	4659 3859 3202 2754	1.1 1.3 2.0 2.3	23.0	16.1	200L/2B	18.6 17.1 15.9 15.5	32.9 30.2 28.1 27.3	43.4 39.9 37.1 36.1	57.7 53.0 49.3 47.9	14.0 12.8 11.9 11.6	323	350	291	328	373	428-445

* Soğutucu gereklidir / Cooling is required / Kühlung ist erforderlich / È richiesto raffreddamento / Le refroidissement est nécessaire / Se requiere un enfriamiento

P1 (kW)		iges	n2 (rpm)	M2 (Nm)	fs	Pt (20°C) (kW)	Pt (40°C) (kW)	Motor IE2	FR (kN)					~ Kg					mm
									MC	MS	PC	PS	CPC	M...	P...	F	FS	CPC	
30.00	PL 10002*	25.7	35.0	7619	0.9	23.0	16.1	225M/6B	22.8	33.3	-	-	17.1	386	-	353	391	436	410-421
		22.1	40.7	6551	1.0				21.8	31.8	-	-	16.3						
		18.4	48.9	5454	1.3				20.8	30.4	-	-	15.6						
		16.2	55.6	4802	1.3				20.2	29.5	-	-	15.1						
		13.4	67.2	3972	1.7				18.9	27.6	-	-	14.1						
	PL 10002*	33.6	41.7	6403	0.8	23.0	16.1	200L/4D	21.8	31.8	-	-	16.3	330	-	297	335	380	410-421
		28.9	48.4	5507	0.9				20.8	30.4	-	-	15.6						
		25.7	54.5	4898	1.2				20.2	29.5	-	-	15.1						
		22.1	63.3	4212	1.4				18.9	27.6	-	-	14.1						
		18.4	76.1	3506	1.9				18.2	26.6	-	-	13.7						
		16.2	86.4	3087	1.9				17.2	25.2	-	-	12.9						
		13.4	104.5	2554	2.5				16.6	24.2	-	-	12.4						
	PL 10002*	48.9	57.3	4659	0.8	23.0	16.1	200L/2B	20.2	29.5	-	-	15.1	315	-	282	320	365	410-421
		40.5	69.1	3859	0.9				18.5	27.1	-	-	13.9						
		33.6	83.3	3202	1.4				17.2	25.2	-	-	12.9						
		28.9	96.9	2754	1.6				16.7	24.5	-	-	12.6						
		25.7	108.9	2449	2.2				16.6	24.2	-	-	12.4						
		22.1	126.7	2106	2.5				15.8	23.0	-	-	11.8						
	PL 7002	22.9	61.1	4364	0.8	18.0	12.6	200L/4D	-	-	33.9	40.7	25.4	-	295	277	298	311	392-403
		20.6	68.0	3926	0.8				-	-	32.8	39.3	24.6						
		18.3	76.5	3487	1.0				-	-	32.2	38.6	24.2						
		13.9	100.7	2649	1.4				-	-	29.3	35.2	22.0						
	PL 7002*	13.9	64.7	4121	1.0	18.0	12.6	225M/6B	-	-	33.4	40.0	25.0	-	351	333	354	367	392-403
	PL 7002*	36.3	77.1	3459	0.9	18.0	12.6	200L/2B	-	-	32.2	38.6	24.2	-	280	262	283	296	392-403
		30.0	93.3	2859	1.1				-	-	29.6	35.5	22.2						
		26.6	105.3	2535	1.3				-	-	29.3	35.2	22.0						
		22.9	122.3	2182	1.5				-	-	27.9	33.5	20.9						
		20.6	135.9	1963	1.4				-	-	26.5	31.7	19.8						
		18.3	153.0	1744	1.8				-	-	25.6	30.7	19.2						
		13.9	201.4	1324	2.5				-	-	23.9	28.6	17.9						
	PL 5002*	16.2	86.4	3087	0.9	15.0	10.5	200L/4D	9.3	11.9	16.7	19.3	12.5	257	266	248	259	270	370-385
		13.4	104.5	2554	1.1				8.9	11.5	16.1	18.6	12.0						
	PL 5002*	23.1	121.2	2201	1.1	15.0	10.5	200L/2B	8.5	10.9	15.3	17.7	11.5	242	251	233	244	255	370-385
		18.4	152.2	1753	1.1				7.8	10.0	14.0	16.2	10.5						
		16.2	172.8	1544	1.6				7.4	9.6	13.4	15.5	10.0						
		13.4	209.0	1277	1.9				7.3	9.3	13.1	15.1	9.8						
	PL 2502*	16.2	172.8	1544	1.1	12.0	8.4	200L/2B	7.4	9.6	13.4	15.5	10.0	236	245	228	238	249	348-363
		13.4	209.0	1277	1.3				7.3	9.3	13.1	15.1	9.8						
	PL 16001	6.75	133.3	2074	2.2	40.0	28.0	225M/6B	13.8	24.4	32.2	42.8	10.4	378	405	346	383	428	428-445
	PL 10001	8.67	103.8	2663	0.9	40.0	28.0	225M/6B	16.6	24.2	-	-	12.4	369	-	337	375	420	410-421
		6.75	133.3	2074	1.5				15.0	21.9	-	-	11.2						
		5.60	160.7	1720	2.3				14.5	21.1	-	-	10.8						
	PL 10001	8.67	161.5	1712	1.2	40.0	28.0	200L/4D	14.5	21.1	-	-	10.8	313	-	281	319	364	410-421
		6.75	207.4	1333	2.2				13.3	19.5	-	-	10.0						
	PL 7001	7.00	128.6	2150	0.9	30.0	21.0	225M/6B	-	-	27.9	33.5	20.9	-	339	321	342	355	392-403
		5.80	155.2	1782	1.3				-	-	25.6	30.7	19.2						
		5.00	180.0	1536	1.7				-	-	24.4	29.3	18.3						
		4.43	203.2	1361	2.2				-	-	23.9	28.6	17.9						
		3.67	245.2	1127	2.8				-	-	22.7	27.3	17.0						
	PL 7001	7.00	200.0	1382	1.3	30.0	21.0	200L/4D	-	-	23.9	28.6	17.9	-	283	265	286	299	392-403
		5.80	241.4	1145	1.9				-	-	22.7	27.3	17.0						
		5.00	280.0	987	2.5				-	-	21.9	26.2	16.4						
	PL 7001	7.00	400.0	691	2.3	30.0	21.0	200L/2B	-	-	19.6	23.5	14.7	-	268	250	271	284	392-403
	PL 5001*	6.00	150.0	1843	0.9	20.0	14.0	225M/6B	8.1	10.4	14.5	16.8	10.9	305	314	297	307	318	370-385
		5.17	174.1	1588	1.2				7.4	9.6	13.4	15.5	10.0						
		4.13	217.9	1269	1.7				7.1	9.1	12.8	14.8	9.6						
		3.78	238.1	1161	2.0				6.9	8.9	12.4	14.4	9.3						
	PL 5001*	7.25	193.1	1432	0.9	20.0	14.0	200L/4D	7.4	9.5	13.2	15.3	9.9	249	258	241	251	262	370-385
		6.00	233.3	1185	1.3				7.0	9.0	12.6	14.6	9.5						
		5.17	270.8	1021	1.7				6.7	8.6	12.0	13.9	9.0						
		4.13	339.0	816	2.4				6.3	8.1	11.3	13.1	8.5						
		3.78	370.4	746	2.9				6.1	7.9	11.0	12.8	8.3						
	PL 5001*	7.25	386.2	716	1.5	20.0	14.0	200L/2B	6.1	7.9	11.0	12.8	8.3	234	243	226	236	247	370-385
		6.00	466.7	592	2.3				5.8	7.4	10.4	12.0	7.8						
		5.17	541.6	510	2.9				5.4	7.0	9.8	11.3	7.3						

* Soğutucu gereklidir / Cooling is required / Kühlung ist erforderlich / È richiesto raffreddamento / Le refroidissement est nécessaire / Se requiere un enfriamiento

P1 (kW)		iges	n2 (rpm)	M2 (Nm)	fs	Pt (20°C) (kW)	Pt (40°C) (kW)	Motor IE2	FR (kN)					~ Kg					mm
									MC	MS	PC	PS	CPC	M...	P...	F	FS	CPC	
30.00	PL 2501*	5.17 4.13 3.78	174.1 217.9 238.1	1588 1269 1161	0.8 1.2 1.4	20.0	14.0	225M/6B	7.4 7.1 6.9	9.6 9.1 8.9	13.4 12.8 12.4	15.5 14.8 14.4	10.0 9.6 9.3	301	310	292	303	314	348-363
	PL 2501*	6.00 5.17 4.13 3.78	233.3 270.8 339.0 370.4	1185 1021 816 746	0.9 1.2 1.7 2.0	20.0	14.0	200L/4D	7.0 6.7 6.3 6.1	9.0 8.6 8.1 7.9	12.6 12.0 11.3 11.0	14.6 13.9 13.1 12.8	9.5 9.0 8.5 8.3	245	254	236	247	258	348-363
	PL 2501*	7.25 6.00 5.17 4.13	386.2 466.7 541.6 678.0	716 592 510 408	1.0 1.5 2.0 2.9	20.0	14.0	200L/2B	6.1 5.8 5.4 5.1	7.9 7.4 7.0 6.5	11.0 10.4 9.8 9.1	12.8 12.0 11.3 10.6	8.3 7.8 7.3 6.9	230	239	221	232	243	348-363
	PL 1601*	4.29 3.56	326.3 393.3	847 703	0.9 1.0	12.0	8.4	200L/4D	2.0 1.9	2.5 2.3	4.4 4.1	5.5 5.1	3.3 3.1	231	233	229	232	236	326-340
	PL 1601*	5.60 4.29 3.56	500.0 652.7 786.5	553 424 352	0.9 1.5 1.8	12.0	8.4	200L/2B	1.8 1.6 1.5	2.2 2.0 1.9	3.8 3.5 3.4	4.8 4.4 4.2	2.9 2.7 2.5	216	218	214	217	221	326-340
	PL 1001*	4.29 3.56	652.7 786.5	424 352	1.0 1.1	12.0	8.4	200L/2B	1.6 1.5	2.0 1.9	3.5 3.4	4.4 4.2	2.7 2.5	214	216	212	215	219	340-318
37.00	PL 90004*	462.6 429.7 398.3 355.8 306.4 270.6 244.6 224.0	3.0 3.3 3.5 3.9 4.6 5.2 5.7 6.3	101249 94048 87176 77874 67062 59226 53536 49027	0.9 1.0 1.1 1.2 1.3 1.5 1.6 1.7	30.0	21.0	225M/4C	240.3 240.3 224.8 224.8 209.3 209.3 186.0 186.0	334.8 334.8 313.2 313.2 291.6 291.6 259.2 259.2	- - - - - - - -	- - - - - - - -	180.2 180.2 168.6 168.6 156.9 156.9 139.5 139.5	978	-	882	904	1152	576-585
	PL 90004*	926.1 854.4 798.3 742.1 687.5 630.8 585.4 543.9 504.1 462.6 429.7 398.3 355.8 306.4 270.6 244.6	3.0 3.3 3.5 3.8 4.1 4.4 4.8 5.1 5.6 6.1 6.5 7.0 7.9 9.1 10.3 11.4	101348 93501 87362 81212 75237 69032 64063 59522 55166 50625 47024 43588 38937 33531 29613 26768	0.8 0.8 0.8 0.9 1.0 1.3 1.1 1.2 1.2 1.7 1.8 1.9 2.1 2.3 2.6 2.9	30.0	21.0	200L/2C	240.3 240.3 224.8 224.8 224.8 224.8 209.3 209.3 186.0 186.0 178.3 178.3 170.5 162.8 155.0 155.0	334.8 334.8 313.2 313.2 313.2 313.2 291.6 291.6 259.2 259.2 248.4 248.4 237.6 226.8 216.0 216.0	- - - - - - - - - - - - - - - -	- - - - - - - - - - - - - - - -	180.2 180.2 168.6 168.6 168.6 168.6 156.9 156.9 139.5 139.5 133.7 133.7 127.9 122.1 116.3 116.3	892	-	796	818	1066	576-585
	PL 65004*	364.4 333.7 301.7 280.3 256.7 212.5	3.8 4.2 4.6 5.0 5.5 6.6	79756 73037 66033 61349 56184 46510	0.8 0.9 0.9 1.0 1.1 1.3	25.0	17.5	225M/4C	113.1 113.1 105.3 105.3 105.3 89.7	156.6 156.6 145.8 145.8 145.8 124.2	- - - - - -	- - - - - -	84.8 84.8 79.0 79.0 79.0 67.3	790	-	732	746	898	556-569
	PL 65004*	694.2 640.4 556.2 515.3 456.4 407.7 364.4 333.7 301.7 280.3 256.7 212.5	4.0 4.4 5.0 5.4 6.1 6.9 7.7 8.4 9.3 10.0 10.9 13.2	75970 70082 60868 56392 49946 44617 39878 36518 33017 30675 28092 23255	0.8 0.9 1.0 1.1 1.2 1.3 1.4 1.5 1.7 1.8 1.9 2.2	25.0	17.5	200L/2C	113.1 113.1 105.3 105.3 93.6 89.7 85.8 85.8 81.9 78.0 78.0 73.3	156.6 156.6 145.8 145.8 129.6 124.2 118.8 118.8 113.4 108.0 108.0 101.5	- - - - - - - - - - - -	- - - - - - - - - - - -	84.8 84.8 79.0 79.0 70.2 67.3 64.4 64.4 61.4 58.5 58.5 55.0	704	-	646	660	812	556-569
	PL 50004*	324.8	4.3	71089	0.8	20.0	14.0	225M/4C	129.1	178.4	-	-	96.8	698	-	640	653	806	536-549
	PL 50004*	616.6 591.0 564.7 511.6 471.9 432.2 391.5 358.5 324.8	4.5 4.7 5.0 5.5 5.9 6.5 7.2 7.8 8.6	67478 64676 61798 55987 51642 47298 42844 39232 35544	0.8 0.8 0.9 0.9 1.0 1.1 1.2 1.3 1.4	20.0	14.0	200L/2C	120.2 120.2 120.2 120.2 106.8 106.8 102.4 97.9 93.5	166.1 166.1 166.1 166.1 147.6 147.6 141.5 135.3 129.2	- - - - - - - - -	- - - - - - - - -	90.1 90.1 90.1 90.1 80.1 80.1 76.8 73.4 70.1	612	-	554	567	720	536-549

* Soğutucu gereklidir / Cooling is required / Kühlung ist erforderlich / È richiesto raffreddamento / Le refroidissement est nécessaire / Se requiere un enfriamiento

P1 (kW)		iges	n2 (rpm)	M2 (Nm)	fs	Pt (20°C) (kW)	Pt (40°C) (kW)	Motor IE2	FR (kN) MC	MS	PC	PS	CPC	~ Kg M…	P…	F	FS	CPC	mm
37.00	PL 35004*	362.7	7.7	39692	0.8	17.0	11.9	200L/2C	79.2	112.2	-	-	59.4	480	-	444	452	543	516-529
		328.5	8.5	35949	0.8				75.6	107.1	-	-	56.7						
		303.1	9.2	33170	0.9				75.6	107.1	-	-	56.7						
		277.5	10.1	30368	1.0				72.0	102.0	-	-	54.0						
		251.4	11.1	27512	1.1				72.0	102.0	-	-	54.0						
		230.3	12.2	25203	1.1				72.0	102.0	-	-	54.0						
		208.6	13.4	22828	1.2				67.7	95.9	-	-	50.8						
		191.0	14.7	20902	1.3				67.7	95.9	-	-	50.8						
	PL 30004*	251.4	11.1	27512	0.9	17.0	11.9	200L/2C	45.0	68.5	-	-	33.8	474	-	433	441	537	496-509
	PL 90003	185.5	7.5	42073	1.6	45.0	31.5	225M/4C	170.5	237.6	-	-	127.9	967	-	871	893	1141	576-585
		154.3	9.1	34997	1.8				162.8	226.8	-	-	122.1						
		133.1	10.5	30188	2.1				155.0	216.0	-	-	116.3						
		121.9	11.5	27648	2.8				155.0	216.0	-	-	116.3						
		117.8	11.9	26718	2.3				150.4	209.5	-	-	112.8						
	PL 90003	185.5	15.1	21036	2.8	45.0	31.5	200L/2C	145.7	203.0	-	-	109.3	881	-	785	807	1055	576-585
	PL 65003*	167.8	8.3	38058	1.5	35.0	24.5	225M/4C	85.8	118.8	-	-	64.4	778	-	720	734	886	556-569
		139.1	10.1	31549	1.7				78.0	108.0	-	-	58.5						
		115.7	12.1	26242	2.0				75.7	104.8	-	-	56.7						
		99.7	14.0	22613	2.3				73.3	101.5	-	-	55.0						
		88.3	15.9	20027	2.5				73.3	101.5	-	-	55.0						
		73.1	19.2	16580	2.9				64.7	89.6	-	-	48.6						
	PL 65003*	167.8	16.7	19029	2.6	35.0	24.5	200L/2C	73.3	101.5	-	-	55.0	692	-	634	648	800	556-569
		139.1	20.1	15775	3.0				64.7	89.6	-	-	48.6						
	PL 50003*	205.5	6.8	46609	0.8	25.0	17.5	225M/4C	102.4	141.5	-	-	76.8	690	-	632	645	794	536-549
		170.1	8.2	38580	0.9				97.9	135.3	-	-	73.4						
		157.3	8.9	35677	1.0				93.5	129.2	-	-	70.1						
		138.6	10.1	31436	0.9				89.0	123.0	-	-	66.8						
		130.2	10.8	29530	1.2				89.0	123.0	-	-	66.8						
		116.9	12.0	26514	1.3				86.3	119.3	-	-	64.7						
		108.0	13.0	24495	1.4				86.3	119.3	-	-	64.7						
		93.0	15.1	21093	1.6				83.7	115.6	-	-	62.7						
		84.4	16.6	19143	2.3				83.7	115.6	-	-	62.7						
		74.2	18.9	16829	1.9				79.2	109.5	-	-	59.4						
		64.0	21.9	14516	2.9				71.2	98.4	-	-	53.4						
	PL 50003*	293.6	9.5	33295	0.8	25.0	17.5	200L/2C	89.0	123.0	-	-	66.8	604	-	546	559	708	536-549
		247.7	11.3	28090	1.2				89.0	123.0	-	-	66.8						
		205.5	13.6	23305	1.4				83.7	115.6	-	-	62.7						
		170.1	16.5	19290	1.7				83.7	115.6	-	-	62.7						
		157.3	17.8	17838	1.8				73.9	102.1	-	-	55.4						
		138.6	20.2	15718	1.6				73.9	102.1	-	-	55.4						
		130.2	21.5	14765	2.1				73.9	102.1	-	-	55.4						
		116.9	24.0	13257	2.3				69.4	95.9	-	-	52.1						
		108.0	25.9	12248	2.4				69.4	95.9	-	-	52.1						
		93.0	30.1	10547	2.8				65.9	91.0	-	-	49.4						
	PL 35003*	136.2	10.3	30891	0.8	23.0	16.1	225M/4C	72.0	102.0	-	-	54.0	558	-	522	530	621	516-529
		121.1	11.6	27466	0.9				72.0	102.0	-	-	54.0						
		108.7	12.9	24654	1.0				69.8	98.9	-	-	52.4						
		99.6	14.1	22590	1.1				67.7	95.9	-	-	50.8						
		88.6	15.8	20095	1.4				67.7	95.9	-	-	50.8						
		83.2	16.8	18870	1.2				64.1	90.8	-	-	48.1						
		70.7	19.8	16035	1.6				59.8	84.7	-	-	44.8						
		64.8	21.6	14697	1.7				59.8	84.7	-	-	44.8						
		58.7	23.9	13314	1.9				56.2	79.6	-	-	42.1						
		53.7	26.1	12180	2.1				56.2	79.6	-	-	42.1						
	PL 35003*	230.3	12.2	26117	0.9	23.0	16.1	200L/2C	72.0	102.0	-	-	54.0	472	-	436	444	535	516-529
		191.1	14.7	21672	1.1				67.7	95.9	-	-	50.8						
		164.1	17.1	18610	1.2				67.7	95.9	-	-	50.8						
		158.1	17.7	17929	1.3				59.8	84.7	-	-	44.8						
		136.2	20.6	15446	1.4				59.8	84.7	-	-	44.8						
		121.1	23.1	13733	1.6				56.2	79.6	-	-	42.1						
		108.7	25.8	12327	1.7				56.2	79.6	-	-	42.1						
		99.6	28.1	11295	1.9				53.3	75.5	-	-	40.0						
		88.6	31.6	10048	2.4				53.3	75.5	-	-	40.0						
		83.2	33.7	9435	2.2				50.4	71.4	-	-	37.8						
		70.7	39.6	8018	2.9				48.2	68.3	-	-	36.2						
	PL 30003*	134.4	10.4	30483	0.8	23.0	16.1	225M/4C	45.0	68.5	-	-	33.8	552	-	511	519	615	496-509
		124.3	11.3	28192	0.8				45.0	68.5	-	-	33.8						
		102.9	13.6	23339	1.0				43.7	66.4	-	-	32.7						
		88.6	15.8	20095	1.1				42.3	64.4	-	-	31.7						
		73.5	19.0	16670	1.3				37.4	56.9	-	-	28.0						
		64.8	21.6	14697	1.4				37.4	56.9	-	-	28.0						

* Soğutucu gereklidir / Cooling is required / Kühlung ist erforderlich / È richiesto raffreddamento / Le refroidissement est nécessaire / Se requiere un enfriamiento

P1 (kW)		iges	n2 (rpm)	M2 (Nm)	fs	Pt (20°C) (kW)	Pt (40°C) (kW)	Motor IE2	FR (kN)					~ Kg					mm
									MC	MS	PC	PS	CPC	M...	P...	F	FS	CPC	
37.00	PL 30003*	134.4	20.8	15242	1.4	23.0	16.1	200L/2C	37.4	56.9	-	-	28.0	466	-	425	433	529	496-509
		124.3	22.5	14096	1.5				35.1	53.4	-	-	26.3						
		102.9	27.2	11669	1.7				35.1	53.4	-	-	26.3						
		88.6	31.6	10048	2.0				33.3	50.7	-	-	25.0						
		73.5	38.1	8335	2.3				30.2	45.9	-	-	22.6						
		64.8	43.2	7349	2.6				29.3	44.5	-	-	21.9						
	PL 25003*	128.4	10.9	29122	0.8	20.0	14.0	225M/4C	45.0	68.5	-	-	33.8	521	-	485	493	582	476-489
		106.3	13.2	24110	1.0				43.7	66.4	-	-	32.7						
		95.0	14.7	21547	0.8				42.3	64.4	-	-	31.7						
		88.0	15.9	19959	1.1				42.3	64.4	-	-	31.7						
		73.1	19.2	16580	1.3				37.4	56.9	-	-	28.0						
		60.5	23.1	13722	1.5				36.0	54.8	-	-	27.0						
		55.4	25.3	12565	1.6				35.1	53.4	-	-	26.3						
	PL 25003*	188.5	14.9	21377	0.8	20.0	14.0	200L/2C	42.3	64.4	-	-	31.7	435	-	399	407	496	476-489
		167.0	16.8	18938	0.9				42.3	64.4	-	-	31.7						
		156.0	17.9	17691	1.0				37.4	56.9	-	-	28.0						
		134.3	20.8	15230	1.1				37.4	56.9	-	-	28.0						
		128.4	21.8	14561	1.4				37.4	56.9	-	-	28.0						
		114.4	24.5	12973	1.2				35.1	53.4	-	-	26.3						
		106.3	26.3	12055	1.7				35.1	53.4	-	-	26.3						
		95.0	29.5	10773	1.5				33.3	50.7	-	-	25.0						
		88.0	31.8	9980	2.0				33.3	50.7	-	-	25.0						
		73.1	38.3	8290	2.3				30.2	45.9	-	-	22.6						
		60.5	46.3	6861	2.7				29.3	44.5	-	-	21.9						
		55.4	50.5	6283	2.9				28.8	43.8	-	-	21.6						
	PL 18003*	73.3	19.1	16625	0.8	17.0	11.9	225M/4C	24.9	44.0	58.1	77.2	18.7	441	468	410	446	491	452-469
		65.0	21.5	14743	0.8				24.9	44.0	58.1	77.2	18.7						
		53.8	26.0	12202	1.0				23.4	41.3	54.6	72.5	17.6						
	PL 18003*	106.7	26.2	12100	1.0	17.0	11.9	200L/2C	23.4	41.3	54.6	72.5	17.6	355	382	324	360	405	452-469
		94.5	29.6	10717	1.1				22.2	39.2	51.8	68.8	16.7						
		81.4	34.4	9231	1.3				21.0	37.1	49.0	65.1	15.8						
		73.3	38.2	8313	1.4				20.1	35.5	46.9	62.3	15.1						
		65.0	43.1	7371	1.5				19.5	34.5	45.5	60.5	14.6						
		53.8	52.0	6101	1.7				19.2	33.9	44.8	59.5	14.4						
	PL 16003*	62.9	22.3	14266	0.9	15.0	10.5	225M/4C	24.0	42.4	56.0	74.4	18.0	428	455	396	433	478	428-445
		57.6	24.3	13064	0.9				23.4	41.3	54.6	72.5	17.6						
	PL 16003*	124.0	22.6	14062	0.8	15.0	10.5	200L/2C	23.4	41.3	54.6	72.5	17.6	342	369	310	347	392	428-445
		109.3	25.6	12395	0.8				23.4	41.3	54.6	72.5	17.6						
		94.9	29.5	10762	1.0				22.2	39.2	51.8	68.8	16.7						
		82.1	34.1	9310	1.2				21.0	37.1	49.0	65.1	15.8						
		75.2	37.2	8528	1.3				21.0	37.1	49.0	65.1	15.8						
		62.9	44.5	7133	1.5				19.5	34.5	45.5	60.5	14.6						
		57.6	48.6	6532	1.6				19.2	33.9	44.8	59.5	14.4						
	PL 10003*	82.1	34.1	9310	0.8	15.0	10.5	200L/2C	22.8	33.3	-	-	17.1	334	-	301	339	384	410-421
		75.2	37.2	8528	0.9				22.8	33.3	-	-	17.1						
		62.9	44.5	7133	1.0				21.1	30.9	-	-	15.8						
		57.6	48.6	6532	1.1				20.8	30.4	-	-	15.6						
	PL 50002	40.5	34.6	9519	2.4	38.0	26.6	225M/4C	62.3	86.1	-	-	46.7	674	-	616	629	778	536-549
		33.6	41.7	7897	2.8				59.6	82.4	-	-	44.7						
	PL 35002*	27.0	51.9	6346	3.0	34.0	23.8	225M/4C	46.1	65.3	-	-	34.6	542	-	506	514	605	516-529
	PL 30002*	35.1	39.9	8250	1.8	34.0	23.8	225M/4C	30.2	45.9	-	-	22.6	536	-	495	503	597	496-509
		29.1	48.1	6840	2.1				28.8	43.8	-	-	21.6						
	PL 25002*	43.8	32.0	10295	1.2	30.0	21.0	225M/4C	33.3	50.7	-	-	25.0	509	-	473	481	570	476-489
		36.3	38.6	8532	1.3				30.2	45.9	-	-	22.6						
		30.2	46.4	7098	2.0				29.3	44.5	-	-	21.9						
		26.0	53.8	6111	2.3				27.9	42.5	-	-	20.9						
		23.0	60.9	5406	2.5				26.6	40.4	-	-	19.9						
	PL 25002*	43.8	63.9	5147	2.0	30.0	21.0	200L/2C	26.1	39.7	-	-	19.6	396	-	360	368	457	476-489
		36.3	77.1	4266	2.4				25.2	38.4	-	-	18.9						
	PL 18002*	30.0	46.7	7051	1.4	25.0	17.5	225M/4C	19.5	34.5	45.5	60.5	14.6	429	456	397	434	479	452-469
		24.9	56.2	5852	1.6				18.6	32.9	43.4	57.7	14.0						
		21.4	65.4	5030	1.8				17.4	30.7	40.6	53.9	13.1						
		19.0	73.7	4466	2.0				16.8	29.7	39.2	52.1	12.6						
		15.7	89.2	3690	2.6				15.6	27.6	36.4	48.4	11.7						
	PL 18002*	30.0	93.3	3526	2.4	25.0	17.5	200L/2C	15.5	27.3	36.1	47.9	11.6	343	370	311	348	393	452-469
		24.9	112.4	2926	2.8				14.6	25.7	34.0	45.1	10.9						

* Soğutucu gereklidir / Cooling is required / Kühlung ist erforderlich / È richiesto raffreddamento / Le refroidissement est nécessaire / Se requiere un enfriamiento

P1 (kW)		iges	n2 (rpm)	M2 (Nm)	fs	Pt (20°C) (kW)	Pt (40°C) (kW)	Motor IE2	FR (kN)					~ Kg					mm
									MC	MS	PC	PS	CPC	M...	P...	F	FS	CPC	
37.00	PL 16002*	33.6	41.7	7897	0.9	23.0	16.1	225M/4C	20.1	35.5	46.9	62.3	15.1	420	447	388	425	470	428-445
		28.9	48.4	6792	1.1				19.2	33.9	44.8	59.5	14.4						
		22.1	63.3	5194	1.7				17.4	30.7	40.6	53.9	13.1						
		16.2	86.4	3808	2.2				15.9	28.1	37.1	49.3	11.9						
		13.4	104.5	3149	3.0				15.3	27.0	35.7	47.4	11.5						
	PL 16002*	48.9	57.3	5747	0.9	23.0	16.1	200L/2C	18.6	32.9	43.4	57.7	14.0	334	361	302	339	384	428-445
		40.5	69.1	4759	1.1				17.1	30.2	39.9	53.0	12.8						
		33.6	83.3	3949	1.7				15.9	28.1	37.1	49.3	11.9						
		28.9	96.9	3396	1.9				15.5	27.3	36.1	47.9	11.6						
		22.1	126.7	2597	3.1				14.6	25.7	34.0	45.1	10.9						
	PL 10002*	25.7	54.5	6040	1.0	23.0	16.1	225M/4C	20.2	29.5	-	-	15.1	412	-	379	417	462	410-421
		22.1	63.3	5194	1.2				18.9	27.6	-	-	14.1						
		18.4	76.1	4325	1.6				18.2	26.6	-	-	13.7						
		16.2	86.4	3808	1.5				17.2	25.2	-	-	12.9						
		13.4	104.5	3149	2.0				16.6	24.2	-	-	12.4						
	PL 10002*	33.6	83.3	3949	1.1	23.0	16.1	200L/2C	17.2	25.2	-	-	12.9	326	-	293	331	376	410-421
		28.9	96.9	3396	1.3				16.7	24.5	-	-	12.6						
		25.7	108.9	3020	1.8				16.6	24.2	-	-	12.4						
		22.1	126.7	2597	2.0				15.8	23.0	-	-	11.8						
		18.4	152.2	2162	2.8				14.5	21.1	-	-	10.8						
		16.2	172.8	1904	2.6				13.8	20.2	-	-	10.4						
	PL 7002*	18.3	76.5	4301	0.8	18.0	12.6	225M/4C	-	-	32.2	38.6	24.2	-	377	359	380	393	392-403
		13.9	100.7	3267	1.1				-	-	29.3	35.2	22.0						
	PL 7002*	30.0	93.3	3526	0.9	18.0	12.6	200L/2C	-	-	29.6	35.5	22.2	-	291	273	294	307	392-403
		26.6	105.3	3126	1.1				-	-	29.3	35.2	22.0						
		22.9	122.3	2691	1.2				-	-	27.9	33.5	20.9						
		20.6	135.9	2421	1.1				-	-	26.5	31.7	19.8						
		18.3	153.0	2151	1.5				-	-	25.6	30.7	19.2						
		13.9	201.4	1633	2.0				-	-	23.9	28.6	17.9						
	PL 5002*	13.4	104.5	3149	0.9	15.0	10.5	225M/4C	8.9	11.5	16.1	18.6	12.0	339	348	330	341	352	370-385
	PL 5002*	23.1	121.2	2715	0.9	15.0	10.5	200L/2C	8.5	10.9	15.3	17.7	11.5	253	262	244	255	266	370-385
		18.4	152.2	2162	0.9				7.8	10.0	14.0	16.2	10.5						
		16.2	172.8	1904	1.3				7.4	9.6	13.4	15.5	10.0						
		13.4	209.0	1575	1.5				7.3	9.3	13.1	15.1	9.8						
	PL 2502*	16.2	172.8	1904	0.9	12.0	8.4	200L/2C	7.4	9.6	13.4	15.5	10.0	247	256	239	249	260	348-363
		13.4	209.0	1575	1.0				7.3	9.3	13.1	15.1	9.8						
	PL 16001	6.75	207.4	1644	2.6	40.0	28.0	225M/4C	12.3	21.7	28.7	38.1	9.2	404	431	372	409	454	428-445
	PL 10001	8.67	161.5	2112	1.0	40.0	28.0	225M/4C	14.5	21.1	-	-	10.8	395	-	363	401	446	410-421
		6.75	207.4	1644	1.8				13.3	19.5	-	-	10.0						
		5.60	250.0	1364	2.7				12.7	18.5	-	-	9.5						
	PL 7001*	7.00	200.0	1705	1.1	30.0	21.0	225M/4C	-	-	23.9	28.6	17.9	-	365	347	368	381	392-403
		5.80	241.4	1413	1.5				-	-	22.7	27.3	17.0						
		5.00	280.0	1218	2.1				-	-	21.9	26.2	16.4						
		4.43	316.0	1079	2.5				-	-	21.0	25.2	15.7						
	PL 7001*	7.00	400.0	852	1.9	30.0	21.0	200L/2C	-	-	19.6	23.5	14.7	-	279	261	282	295	392-403
		5.80	482.8	706	2.7				-	-	18.7	22.4	14.0						
	PL 5001*	6.00	233.3	1461	1.0	20.0	14.0	225M/4C	7.0	9.0	12.6	14.6	9.5	331	340	323	333	344	370-385
		5.17	270.8	1259	1.3				6.7	8.6	12.0	13.9	9.0						
		4.13	339.0	1006	2.0				6.3	8.1	11.3	13.1	8.5						
		3.78	370.4	921	2.3				6.1	7.9	11.0	12.8	8.3						
	PL 5001*	7.25	386.2	883	1.2	20.0	14.0	200L/2C	6.1	7.9	11.0	12.8	8.3	245	254	237	247	258	370-385
		6.00	466.7	731	1.8				5.8	7.4	10.4	12.0	7.8						
		5.17	541.6	630	2.4				5.4	7.0	9.8	11.3	7.3						
	PL 2501*	5.17	270.8	1259	0.9	20.0	14.0	225M/4C	6.7	8.6	12.0	13.9	9.0	327	336	318	329	340	348-363
		4.13	339.0	1006	1.4				6.3	8.1	11.3	13.1	8.5						
		3.78	370.4	921	1.6				6.1	7.9	11.0	12.8	8.3						
	PL 2501*	7.25	386.2	883	0.8	20.0	14.0	200L/2C	6.1	7.9	11.0	12.8	8.3	241	250	232	243	254	348-363
		6.00	466.7	731	1.2				5.8	7.4	10.4	12.0	7.8						
		5.17	541.6	630	1.7				5.4	7.0	9.8	11.3	7.3						
		4.13	678.0	503	2.4				5.1	6.5	9.1	10.6	6.9						
		3.78	740.7	460	2.8				5.0	6.4	9.0	10.4	6.7						
	PL 1601*	3.56	393.3	867	0.8	12.0	8.4	225M/4C	1.9	2.3	4.1	5.1	3.1	313	315	311	314	318	326-340
	PL 1601*	4.29	652.7	522	1.2	12.0	8.4	200L/2C	1.6	2.0	3.5	4.4	2.7	227	229	225	228	232	326-340
		3.56	786.5	434	1.4				1.5	1.9	3.4	4.2	2.5						
	PL 1001*	4.29	652.7	522	0.8	12.0	8.4	200L/2C	1.6	2.0	3.5	4.4	2.7	225	227	223	226	230	304-318
		3.56	786.5	434	0.9				1.5	1.9	3.4	4.2	2.5						

* Soğutucu gereklidir / Cooling is required / Kühlung ist erforderlich / È richiesto raffreddamento / Le refroidissement est nécessaire / Se requiere un enfriamiento

P1 (kW)		iges	n2 (rpm)	M2 (Nm)	fs	Pt (20°C) (kW)	Pt (40°C) (kW)	Motor IE2	FR (kN) MC	MS	PC	PS	CPC	~ Kg M…	P…	F	FS	CPC	mm
45.00	PL 90004*	462.6	3.0	123141	0.8	30.0	21.0	225M/4D	240.3	334.8	-	-	180.2	998	-	902	924	1172	576-585
		429.7	3.3	114383	0.8				240.3	334.8	-	-	180.2						
		398.3	3.5	106025	0.9				224.8	313.2	-	-	168.6						
		355.8	3.9	94712	1.0				224.8	313.2	-	-	168.6						
		306.4	4.6	81562	1.1				209.3	291.6	-	-	156.9						
		270.6	5.2	72032	1.2				209.3	291.6	-	-	156.9						
		244.6	5.7	65111	1.3				186.0	259.2	-	-	139.5						
		224.0	6.3	59627	1.4				186.0	259.2	-	-	139.5						
	PL 90004*	687.5	4.1	91504	0.8	30.0	21.0	225M/2B	224.8	313.2	-	-	168.6	953	-	857	879	1127	576-585
		630.8	4.4	83957	1.1				224.8	313.2	-	-	168.6						
		585.4	4.8	77915	0.9				209.3	291.6	-	-	156.9						
		543.9	5.1	72391	1.0				209.3	291.6	-	-	156.9						
		504.1	5.6	67094	1.0				186.0	259.2	-	-	139.5						
		462.6	6.1	61571	1.4				186.0	259.2	-	-	139.5						
		429.7	6.5	57192	1.5				178.3	248.4	-	-	133.7						
		398.3	7.0	53012	1.6				178.3	248.4	-	-	133.7						
		355.8	7.9	47356	1.7				170.5	237.6	-	-	127.9						
		306.4	9.1	40781	1.9				162.8	226.8	-	-	122.1						
		270.6	10.3	36016	2.2				155.0	216.0	-	-	116.3						
		244.6	11.4	32555	2.4				155.0	216.0	-	-	116.3						
		224.0	12.5	29814	2.5				155.0	216.0	-	-	116.3						
	PL 65004*	301.7	4.6	80311	0.8	25.0	17.5	225M/4D	105.3	145.8	-	-	79.0	810	-	752	766	918	556-569
		280.3	5.0	74614	0.8				105.3	145.8	-	-	79.0						
		256.7	5.5	68332	0.9				105.3	145.8	-	-	79.0						
		212.5	6.6	56566	1.0				89.7	124.2	-	-	67.3						
	PL 65004*	556.2	5.0	74028	0.8	25.0	17.5	225M/2B	105.3	145.8	-	-	79.0	765	-	707	721	873	556-569
		515.3	5.4	68585	0.9				105.3	145.8	-	-	79.0						
		456.4	6.1	60745	1.0				93.6	129.6	-	-	70.2						
		407.7	6.9	54264	1.1				89.7	124.2	-	-	67.3						
		364.4	7.7	48500	1.2				85.8	118.8	-	-	64.4						
		333.7	8.4	44414	1.3				85.8	118.8	-	-	64.4						
		301.7	9.3	40155	1.4				81.9	113.4	-	-	61.4						
		280.3	10.0	37307	1.5				78.0	108.0	-	-	58.5						
		256.7	10.9	34166	1.6				78.0	108.0	-	-	58.5						
		212.5	13.2	28283	1.8				73.3	101.5	-	-	55.0						
	PL 50004*	511.6	5.5	68092	0.8	20.0	14.0	225M/2B	120.2	166.1	-	-	90.1	673	-	615	628	781	536-549
		471.9	5.9	62808	0.8				106.8	147.6	-	-	80.1						
		432.2	6.5	57524	0.9				106.8	147.6	-	-	80.1						
		391.5	7.2	52107	1.0				102.4	141.5	-	-	76.8						
		358.5	7.8	47715	1.0				97.9	135.3	-	-	73.4						
		324.8	8.6	43230	1.1				93.5	129.2	-	-	70.1						
	PL 35004*	277.5	10.1	36934	0.8	17.0	11.9	225M/2B	72.0	102.0	-	-	54.0	541	-	505	513	604	516-529
		251.4	11.1	33460	0.9				72.0	102.0	-	-	54.0						
		230.3	12.2	30652	0.9				72.0	102.0	-	-	54.0						
		208.6	13.4	27764	1.0				67.7	95.9	-	-	50.8						
		191.0	14.7	25421	1.1				67.7	95.9	-	-	50.8						
	PL 90003	185.5	7.5	51170	1.3	45.0	31.5	225M/4D	170.5	237.6	-	-	127.9	987	-	891	913	1161	576-585
		154.3	9.1	42563	1.5				162.8	226.8	-	-	122.1						
		133.1	10.5	36715	1.7				155.0	216.0	-	-	116.3						
		121.9	11.5	33626	2.3				155.0	216.0	-	-	116.3						
		117.8	11.9	32495	1.9				150.4	209.5	-	-	112.8						
		105.1	13.3	28992	2.6				150.4	209.5	-	-	112.8						
		93.1	15.0	25681	2.9				145.7	203.0	-	-	109.3						
	PL 90003	185.5	15.1	25585	2.3	45.0	31.5	225M/2B	145.7	203.0	-	-	109.3	942	-	846	868	1116	576-585
		154.3	18.1	21282	2.7				128.7	179.3	-	-	96.5						
		133.1	21.0	18358	3.0				128.7	179.3	-	-	96.5						
	PL 65003*	167.8	8.3	46287	1.2	35.0	24.5	225M/4D	85.8	118.8	-	-	64.4	798	-	740	754	906	556-569
		139.1	10.1	38370	1.4				78.0	108.0	-	-	58.5						
		115.7	12.1	31916	1.7				75.7	104.8	-	-	56.7						
		99.7	14.0	27502	1.9				73.3	101.5	-	-	55.0						
		88.3	15.9	24357	2.1				73.3	101.5	-	-	55.0						
		73.1	19.2	20164	2.4				64.7	89.6	-	-	48.6						
		68.0	20.6	18758	2.5				64.7	89.6	-	-	48.6						
		56.3	24.9	15530	3.0				60.8	84.2	-	-	45.6						
	PL 65003*	167.8	16.7	23144	2.2	35.0	24.5	225M/2B	73.3	101.5	-	-	55.0	753	-	695	709	861	556-569
		139.1	20.1	19185	2.5				64.7	89.6	-	-	48.6						
		115.7	24.2	15958	2.9				60.8	84.2	-	-	45.6						

* Soğutucu gereklidir / Cooling is required / Kühlung ist erforderlich / È richiesto raffreddamento / Le refroidissement est nécessaire / Se requiere un enfriamiento

P1 (kW)		iges	n2 (rpm)	M2 (Nm)	fs	Pt (20°C) (kW)	Pt (40°C) (kW)	Motor IE2	FR (kN)					~ Kg					mm
									MC	MS	PC	PS	CPC	M...	P...	F	FS	CPC	
45.00	PL 50003*	170.1	8.2	46922	0.8	25.0	17.5	225M/4D	97.9	135.3	-	-	73.4	710	-	652	665	814	536-549
		157.3	8.9	43391	0.8				93.5	129.2	-	-	70.1						
		130.2	10.8	35915	1.0				89.0	123.0	-	-	66.8						
		116.9	12.0	32247	1.1				86.3	119.3	-	-	64.7						
		108.0	13.0	29792	1.1				86.3	119.3	-	-	64.7						
		93.0	15.1	25654	1.3				83.7	115.6	-	-	62.7						
		84.4	16.6	23282	1.9				83.7	115.6	-	-	62.7						
		74.2	18.9	20468	1.5				79.2	109.5	-	-	59.4						
		64.0	21.9	17654	2.4				71.2	98.4	-	-	53.4						
		53.1	26.4	14648	2.8				69.4	95.9	-	-	52.1						
	PL 50003*	247.7	11.3	34164	1.0	25.0	17.5	225M/2B	89.0	123.0	-	-	66.8	665	-	607	620	769	536-549
		205.5	13.6	28343	1.2				83.7	115.6	-	-	62.7						
		170.1	16.5	23461	1.4				83.7	115.6	-	-	62.7						
		157.3	17.8	21695	1.5				73.9	102.1	-	-	55.4						
		138.6	20.2	19116	1.3				73.9	102.1	-	-	55.4						
		130.2	21.5	17958	1.7				73.9	102.1	-	-	55.4						
		116.9	24.0	16123	1.9				69.4	95.9	-	-	52.1						
		108.0	25.9	14896	2.0				69.4	95.9	-	-	52.1						
		93.0	30.1	12827	2.3				65.9	91.0	-	-	49.4						
		74.2	37.7	10234	2.7				59.6	82.4	-	-	44.7						
	PL 35003*	230.3	12.2	31764	0.8	23.0	16.1	225M/2B	72.0	102.0	-	-	54.0	533	-	497	505	596	516-529
		191.1	14.7	26357	0.9				67.7	95.9	-	-	50.8						
		164.1	17.1	22633	1.0				67.7	95.9	-	-	50.8						
		158.1	17.7	21806	1.0				59.8	84.7	-	-	44.8						
		136.2	20.6	18785	1.2				59.8	84.7	-	-	44.8						
		121.1	23.1	16703	1.3				56.2	79.6	-	-	42.1						
		108.7	25.8	14992	1.4				56.2	79.6	-	-	42.1						
		99.6	28.1	13737	1.5				53.3	75.5	-	-	40.0						
		88.6	31.6	12220	2.0				53.3	75.5	-	-	40.0						
		83.2	33.7	11475	1.8				50.4	71.4	-	-	37.8						
		70.7	39.6	9751	2.4				48.2	68.3	-	-	36.2						
		64.8	43.2	8937	2.6				46.8	66.3	-	-	35.1						
		58.7	47.7	8096	2.8				46.1	65.3	-	-	34.6						
		53.7	52.1	7407	3.0				46.1	65.3	-	-	34.6						
	PL 35003*	108.7	12.9	29985	0.8	23.0	16.1	225M/4D	69.8	98.9	-	-	52.4	578	-	542	550	641	516-529
		99.6	14.1	27474	0.9				67.7	95.9	-	-	50.8						
		88.6	15.8	24440	1.1				67.7	95.9	-	-	50.8						
		83.2	16.8	22951	1.0				64.1	90.8	-	-	48.1						
		70.7	19.8	19502	1.3				59.8	84.7	-	-	44.8						
		64.8	21.6	17875	1.4				59.8	84.7	-	-	44.8						
		58.7	23.9	16192	1.6				56.2	79.6	-	-	42.1						
		53.7	26.1	14813	1.7				56.2	79.6	-	-	42.1						
	PL 30003*	102.9	13.6	28385	0.8	23.0	16.1	225M/4D	43.7	66.4	-	-	32.7	572	-	531	539	635	496-509
		88.6	15.8	24440	0.9				42.3	64.4	-	-	31.7						
		73.5	19.0	20275	1.1				37.4	56.9	-	-	28.0						
		64.8	21.6	17875	1.2				37.4	56.9	-	-	28.0						
	PL 30003*	134.4	20.8	18537	1.1	23.0	16.1	225M/2B	37.4	56.9	-	-	28.0	527	-	486	494	590	496-509
		124.3	22.5	17144	1.2				35.1	53.4	-	-	26.3						
		102.9	27.2	14192	1.4				35.1	53.4	-	-	26.3						
		88.6	31.6	12220	1.6				33.3	50.7	-	-	25.0						
		73.5	38.1	10137	1.9				30.2	45.9	-	-	22.6						
		64.8	43.2	8937	2.1				29.3	44.5	-	-	21.9						
	PL 25003*	106.3	13.2	29323	0.8	20.0	14.0	225M/4D	43.7	66.4	-	-	32.7	541	-	505	513	602	476-489
		88.0	15.9	24275	0.9				42.3	64.4	-	-	31.7						
		73.1	19.2	20164	1.1				37.4	56.9	-	-	28.0						
		60.5	23.1	16689	1.3				36.0	54.8	-	-	27.0						
		55.4	25.3	15282	1.3				35.1	53.4	-	-	26.3						
	PL 25003	156.0	17.9	21516	0.8	20.0	14.0	225M/2B	37.4	56.9	-	-	28.0	496	-	460	468	557	476-489
		134.3	20.8	18523	0.9				37.4	56.9	-	-	28.0						
		128.4	21.8	17709	1.2				37.4	56.9	-	-	28.0						
		114.4	24.5	15779	1.0				35.1	53.4	-	-	26.3						
		106.3	26.3	14661	1.4				35.1	53.4	-	-	26.3						
		95.0	29.5	13103	1.2				33.3	50.7	-	-	25.0						
		88.0	31.8	12137	1.6				33.3	50.7	-	-	25.0						
		73.1	38.3	10082	1.9				30.2	45.9	-	-	22.6						
		60.5	46.3	8344	2.2				29.3	44.5	-	-	21.9						
		55.4	50.5	7641	2.4				28.8	43.8	-	-	21.6						
	PL 18003*	53.8	26.0	14841	0.8	17.0	11.9	225M/4D	23.4	41.3	54.6	72.5	17.6	461	488	430	466	511	452-469

* Soğutucu gereklidir / Cooling is required / Kühlung ist erforderlich / È richiesto raffreddamento / Le refroidissement est nécessaire / Se requiere un enfriamiento

P1 (kW)		iges	n2 (rpm)	M2 (Nm)	fs	Pt (20°C) (kW)	Pt (40°C) (kW)	Motor IE2	FR (kN) MC	MS	PC	PS	CPC	~ Kg M…	P…	F	FS	CPC	mm
45.00	PL 18003*	106.7	26.2	14716	0.8	17.0	11.9	225M/2B	23.4	41.3	54.6	72.5	17.6	416	443	385	421	466	452-469
		94.5	29.6	13034	0.9				22.2	39.2	51.8	68.8	16.7						
		81.4	34.4	11227	1.0				21.0	37.1	49.0	65.1	15.8						
		73.3	38.2	10110	1.1				20.1	35.5	46.9	62.3	15.1						
		65.0	43.1	8965	1.2				19.5	34.5	45.5	60.5	14.6						
		53.8	52.0	7420	1.4				19.2	33.9	44.8	59.5	14.4						
	PL 16003*	57.6	24.3	15889	0.8	15.0	10.5	225M/4D	23.4	41.3	54.6	72.5	17.6	448	475	416	453	498	428-445
	PL 16003*	94.9	29.5	13089	0.8	15.0	10.5	225M/2B	22.2	39.2	51.8	68.8	16.7	403	430	371	408	453	428-445
		82.1	34.1	11324	1.0				21.0	37.1	49.0	65.1	15.8						
		75.2	37.2	10372	1.1				21.0	37.1	49.0	65.1	15.8						
		62.9	44.5	8675	1.3				19.5	34.5	45.5	60.5	14.6						
		57.6	48.6	7944	1.4				19.2	33.9	44.8	59.5	14.4						
	PL 10003*	62.9	44.5	8675	0.9	15.0	10.5	225M/2B	21.1	30.9	-	-	15.8	395	-	362	400	445	410-421
		57.6	48.6	7944	0.9				20.8	30.4	-	-	15.6						
	PL 50002*	40.5	34.6	11577	2.0	38.0	26.6	225M/4D	62.3	86.1	-	-	46.7	694	-	636	649	798	536-549
		33.6	41.7	9605	2.3				59.6	82.4	-	-	44.7						
	PL 35002*	27.0	51.9	7718	2.4	34.0	23.8	225M/4D	46.1	65.3	-	-	34.6	562	-	526	534	625	516-529
	PL 30002*	35.1	39.9	10033	1.5	34.0	23.8	225M/4D	30.2	45.9	-	-	22.6	556	-	515	523	617	496-509
		29.1	48.1	8318	1.7				28.8	43.8	-	-	21.6						
		22.4	62.5	6403	2.8				26.6	40.4	-	-	19.9						
	PL 25002*	43.8	32.0	12520	0.9	30.0	21.0	225M/4D	33.3	50.7	-	-	25.0	529	-	493	501	590	476-489
		36.3	38.6	10376	1.1				30.2	45.9	-	-	22.6						
		30.2	46.4	8633	1.7				29.3	44.5	-	-	21.9						
		26.0	53.8	7432	1.9				27.9	42.5	-	-	20.9						
		23.0	60.9	6575	2.1				26.6	40.4	-	-	19.9						
		20.0	70.0	5717	3.0				25.7	39.0	-	-	19.2						
	PL 25002*	43.8	63.9	6260	1.7	30.0	21.0	225M/2B	26.1	39.7	-	-	19.6	457	-	421	429	518	476-489
		36.3	77.1	5188	2.0				25.2	38.4	-	-	18.9						
		30.2	92.7	4316	3.0				23.2	35.3	-	-	17.4						
	PL 18002*	30.0	46.7	8576	1.1	25.0	17.5	225M/4D	19.5	34.5	45.5	60.5	14.6	449	476	417	454	499	452-469
		24.9	56.2	7118	1.3				18.6	32.9	43.4	57.7	14.0						
		21.4	65.4	6117	1.5				17.4	30.7	40.6	53.9	13.1						
		19.0	73.7	5431	1.6				16.8	29.7	39.2	52.1	12.6						
		15.7	89.2	4488	2.2				15.6	27.6	36.4	48.4	11.7						
		13.0	107.7	3716	2.5				14.9	26.2	34.7	46.0	11.1						
	PL 18002*	30.0	93.3	4288	2.0	25.0	17.5	225M/2B	15.5	27.3	36.1	47.9	11.6	404	431	372	409	454	452-469
		24.9	112.4	3559	2.3				14.6	25.7	34.0	45.1	10.9						
		21.4	130.8	3059	2.6				13.8	24.4	32.2	42.8	10.4						
		19.0	147.4	2716	2.8				13.8	24.4	32.2	42.8	10.4						
	PL 16002*	33.6	41.7	9605	0.8	23.0	16.1	225M/4D	20.1	35.5	46.9	62.3	15.1	440	467	408	445	490	428-445
		28.9	48.4	8261	0.9				19.2	33.9	44.8	59.5	14.4						
		22.1	63.3	6317	1.4				17.4	30.7	40.6	53.9	13.1						
		16.2	86.4	4631	1.8				15.9	28.1	37.1	49.3	11.9						
		13.4	104.5	3830	2.5				15.3	27.0	35.7	47.4	11.5						
	PL 16002*	48.9	57.3	6989	0.8	23.0	16.1	225M/2B	18.6	32.9	43.4	57.7	14.0	395	422	363	400	445	428-445
		40.5	69.1	5789	0.9				17.1	30.2	39.9	53.0	12.8						
		33.6	83.3	4802	1.4				15.9	28.1	37.1	49.3	11.9						
		28.9	96.9	4131	1.6				15.5	27.3	36.1	47.9	11.6						
		22.1	126.7	3159	2.5				14.6	25.7	34.0	45.1	10.9						
	PL 10002*	25.7	54.5	7346	0.8	23.0	16.1	225M/4D	20.2	29.5	-	-	15.1	432	-	399	437	482	410-421
		22.1	63.3	6317	0.9				18.9	27.6	-	-	14.1						
		18.4	76.1	5260	1.3				18.2	26.6	-	-	13.7						
		16.2	86.4	4631	1.2				17.2	25.2	-	-	12.9						
		13.4	104.5	3830	1.7				16.6	24.2	-	-	12.4						
	PL 10002*	33.6	83.3	4802	0.9	23.0	16.1	225M/2B	17.2	25.2	-	-	12.9	387	-	354	392	437	410-421
		28.9	96.9	4131	1.1				16.7	24.5	-	-	12.6						
		25.7	108.9	3673	1.5				16.6	24.2	-	-	12.4						
		22.1	126.7	3159	1.7				15.8	23.0	-	-	11.8						
		18.4	152.2	2630	2.3				14.5	21.1	-	-	10.8						
		16.2	172.8	2315	2.2				13.8	20.2	-	-	10.4						
		13.4	209.0	1915	3.0				13.5	19.7	-	-	10.1						
	PL 7002*	13.9	100.7	3973	0.9	18.0	12.6	225M/4D	-	-	29.3	35.2	22.0	-	397	379	400	413	392-403
	PL 7002*	26.6	105.3	3802	0.9	18.0	12.6	225M/2B	-	-	29.3	35.2	22.0	-	352	334	355	368	392-403
		22.9	122.3	3273	1.0				-	-	27.9	33.5	20.9						
		20.6	135.9	2944	0.9				-	-	26.5	31.7	19.8						
		18.3	153.0	2616	1.2				-	-	25.6	30.7	19.2						
		13.9	201.4	1987	1.7				-	-	23.9	28.6	17.9						

* Soğutucu gereklidir / Cooling is required / Kühlung ist erforderlich / È richiesto raffreddamento / Le refroidissement est nécessaire / Se requiere un enfriamiento

P1 (kW)		iges	n2 (rpm)	M2 (Nm)	fs	Pt (20°C) (kW)	Pt (40°C) (kW)	Motor IE2	FR (kN)					~ Kg					mm
									MC	MS	PC	PS	CPC	M...	P...	F	FS	CPC	
45.00	PL 5002*	16.2 13.4	172.8 209.0	2315 1915	1.1 1.2	15.0	10.5	225M/2B	7.4 7.3	9.6 9.3	13.4 13.1	15.5 15.1	10.0 9.8	314	323	305	316	327	370-385
	PL 2502*	13.4	209.0	1915	0.9	12.0	8.4	225M/2B	7.3	9.3	13.1	15.1	9.8	308	317	300	310	321	348-363
	PL 16001*	6.75	207.4	1999	2.1	40.0	28.0	225M/4D	12.3	21.7	28.7	38.1	9.2	424	451	392	429	474	428-445
	PL 10001*	8.67 6.75 5.60	161.5 207.4 250.0	2568 1999 1659	0.8 1.4 2.2	40.0	28.0	225M/4D	14.5 13.3 12.7	21.1 19.5 18.5	- - -	- - -	10.8 10.0 9.5	415	-	383	421	466	410-421
	PL 7001*	7.00 5.80 5.00 4.43 3.67	200.0 241.4 280.0 316.0 381.5	2074 1718 1481 1312 1087	0.9 1.3 1.7 2.1 2.7	30.0	21.0	225M/4D	- - - - -	- - - - -	23.9 22.7 21.9 21.0 20.1	28.6 27.3 26.2 25.2 24.2	17.9 17.0 16.4 15.7 15.1	-	385	367	388	401	392-403
	PL 7001*	7.00 5.00	400.0 560.0	1037 741	1.5 3.0	30.0	21.0	225M/2B	- -	- -	19.6 17.8	23.5 21.4	14.7 13.4	-	340	322	343	356	392-403
	PL 5001*	6.00 5.17 4.13 3.78	233.3 270.8 339.0 370.4	1777 1531 1223 1120	0.9 1.1 1.6 1.9	20.0	14.0	225M/4D	7.0 6.7 6.3 6.1	9.0 8.6 8.1 7.9	12.6 12.0 11.3 11.0	14.6 13.9 13.1 12.8	9.5 9.0 8.5 8.3	351	360	343	353	364	370-385
	PL 5001*	7.25 6.00 5.17 4.13	386.2 466.7 541.6 678.0	1074 889 766 612	1.0 1.5 2.0 2.9	20.0	14.0	225M/2B	6.1 5.8 5.4 5.1	7.9 7.4 7.0 6.5	11.0 10.4 9.8 9.1	12.8 12.0 11.3 10.6	8.3 7.8 7.3 6.9	306	315	298	308	319	370-385
	PL 2501*	5.17 4.13 3.78	270.8 339.0 370.4	1531 1223 1120	0.8 1.1 1.3	20.0	14.0	225M/4D	6.7 6.3 6.1	8.6 8.1 7.9	12.0 11.3 11.0	13.9 13.1 12.8	9.0 8.5 8.3	347	356	338	349	360	348-363
	PL 2501*	6.00 5.17 4.13	466.7 541.6 678.0	889 766 612	1.0 1.4 2.0	20.0	14.0	225M/2B	5.8 5.4 5.1	7.4 7.0 6.5	10.4 9.8 9.1	12.0 11.3 10.6	7.8 7.3 6.9	302	311	293	304	315	348-363
	PL 1601*	4.29 3.56	652.7 786.5	635 527	1.0 1.2	12.0	8.4	225M/2B	1.6 1.5	2.0 1.9	3.5 3.4	4.4 4.2	2.7 2.5	288	290	286	289	293	326-340
	PL 1001*	3.56	786.5	527	0.8	12.0	8.4	225M/2B	1.5	1.9	3.4	4.2	2.5	286	288	284	287	291	304-318
55.00	PL 90004*	355.8 306.4 270.6 244.6 224.0	3.9 4.6 5.2 5.7 6.3	115759 99686 88039 79580 72878	0.8 0.9 1.0 1.1 1.2	30.0	21.0	250M/4D	224.8 209.3 209.3 186.0 186.0	313.2 291.6 291.6 259.2 259.2	- - - - -	- - - - -	168.6 156.9 156.9 139.5 139.5	1265	-	1169	1191	1439	576-585
	PL 90004*	630.8 543.9 504.1 462.6 429.7 398.3 355.8 306.4 270.6 244.6 224.0	4.4 5.1 5.6 6.1 6.5 7.0 7.9 9.1 10.3 11.4 12.5	102615 88478 82004 75253 69901 64793 57879 49843 44019 39790 36439	0.9 0.8 0.8 1.1 1.2 1.3 1.4 1.6 1.8 1.9 2.1	30.0	21.0	250M/2B	224.8 209.3 186.0 186.0 178.3 178.3 170.5 162.8 155.0 155.0 155.0	313.2 291.6 259.2 259.2 248.4 248.4 237.6 226.8 216.0 216.0 216.0	- - - - - - - - - - -	- - - - - - - - - - -	168.6 156.9 139.5 139.5 133.7 133.7 127.9 122.1 116.3 116.3 116.3	1247	-	1151	1173	1421	576-585
	PL 65004*	456.4 407.7 364.4 333.7 301.7 280.3 256.7 212.5	6.1 6.9 7.7 8.4 9.3 10.0 10.9 13.2	74244 66322 59278 54284 49079 45597 41758 34568	0.8 0.9 1.0 1.0 1.1 1.2 1.3 1.5	25.0	17.5	250M/2B	93.6 89.7 85.8 85.8 81.9 78.0 78.0 73.3	129.6 124.2 118.8 118.8 113.4 108.0 108.0 101.5	- - - - - - - -	- - - - - - - -	70.2 67.3 64.4 64.4 61.4 58.5 58.5 55.0	1059	-	1001	1015	1167	556-569
	PL 65004*	212.5	6.6	69136	0.8	25.0	17.5	250M/4D	89.7	124.2	-	-	67.3	1077	-	1019	1033	1185	556-569
	PL 50004*	391.5 358.5 324.8	7.2 7.8 8.6	63687 58319 52836	0.8 0.9 0.9	20.0	14.0	250M/2B	102.4 97.9 93.5	141.5 135.3 129.2	- - -	- - -	76.8 73.4 70.1	967	-	909	922	1075	536-549
	PL 35004*	230.3 208.6 191.0	12.2 13.4 14.7	37464 33934 31071	0.8 0.8 0.9	17.0	11.9	250M/2B	72.0 67.7 67.7	102.0 95.9 95.9	- - -	- - -	54.0 50.8 50.8	835	-	799	807	898	516-529

* Soğutucu gereklidir / Cooling is required / Kühlung ist erforderlich / È richiesto raffreddamento / Le refroidissement est nécessaire / Se requiere un enfriamiento

P1 (kW)		iges	n2 (rpm)	M2 (Nm)	fs	Pt (20°C) (kW)	Pt (40°C) (kW)	Motor IE2	FR (kN) MC	MS	PC	PS	CPC	~ Kg M…	P…	F	FS	CPC	mm
55.00	PL 90003	185.5	7.5	62541	1.0	45.0	31.5	250M/4D	170.5	237.6	-	-	127.9	1254	-	1158	1180	1428	576-585
		154.3	9.1	52022	1.2				162.8	226.8	-	-	122.1						
		133.1	10.5	44874	1.4				155.0	216.0	-	-	116.3						
		121.9	11.5	41098	1.9				155.0	216.0	-	-	116.3						
		117.8	11.9	39716	1.5				150.4	209.5	-	-	112.8						
		105.1	13.3	35434	2.1				150.4	209.5	-	-	112.8						
		93.1	15.0	31388	2.3				145.7	203.0	-	-	109.3						
		80.9	17.3	27275	2.6				138.0	192.2	-	-	103.5						
		71.6	19.6	24140	2.9				128.7	179.3	-	-	96.5						
	PL 90003*	185.5	15.1	31270	1.9	45.0	31.5	250M/2B	145.7	203.0	-	-	109.3	1236	-	1140	1162	1410	576-585
		154.3	18.1	26011	2.2				128.7	179.3	-	-	96.5						
		133.1	21.0	22437	2.4				128.7	179.3	-	-	96.5						
		117.8	23.8	19858	2.7				120.9	168.5	-	-	90.7						
	PL 65003*	167.8	8.3	56573	1.0	35.0	24.5	250M/4D	85.8	118.8	-	-	64.4	1065	-	1007	1021	1173	556-569
		139.1	10.1	46897	1.2				78.0	108.0	-	-	58.5						
		115.7	12.1	39008	1.4				75.7	104.8	-	-	56.7						
		99.7	14.0	33614	1.5				73.3	101.5	-	-	55.0						
		88.3	15.9	29770	1.7				73.3	101.5	-	-	55.0						
		73.1	19.2	24645	2.0				64.7	89.6	-	-	48.6						
		68.0	20.6	22926	2.1				64.7	89.6	-	-	48.6						
		56.3	24.9	18981	2.5				60.8	84.2	-	-	45.6						
	PL 65003*	167.8	16.7	28287	1.8	35.0	24.5	250M/2B	73.3	101.5	-	-	55.0	1047	-	989	1003	1155	556-569
		139.1	20.1	23449	2.1				64.7	89.6	-	-	48.6						
		115.7	24.2	19504	2.4				60.8	84.2	-	-	45.6						
		99.7	28.1	16807	2.7				57.7	79.9	-	-	43.3						
		88.3	31.7	14885	3.0				57.7	79.9	-	-	43.3						
	PL 50003*	130.2	10.8	43897	0.8	25.0	17.5	250M/4D	89.0	123.0	-	-	66.8	977	-	919	932	1081	536-549
		116.9	12.0	39413	0.9				86.3	119.3	-	-	64.7						
		108.0	13.0	36412	0.9				86.3	119.3	-	-	64.7						
		93.0	15.1	31355	1.0				83.7	115.6	-	-	62.7						
		84.4	16.6	28455	1.5				83.7	115.6	-	-	62.7						
		74.2	18.9	25016	1.3				79.2	109.5	-	-	59.4						
		64.0	21.9	21577	1.9				71.2	98.4	-	-	53.4						
		53.1	26.4	17903	2.3				69.4	95.9	-	-	52.1						
	PL 50003*	247.7	11.3	41756	0.8	25.0	17.5	250M/2B	89.0	123.0	-	-	66.8	959	-	901	914	1063	536-549
		205.5	13.6	34642	1.0				83.7	115.6	-	-	62.7						
		170.1	16.5	28674	1.1				83.7	115.6	-	-	62.7						
		157.3	17.8	26517	1.2				73.9	102.1	-	-	55.4						
		138.6	20.2	23364	1.1				73.9	102.1	-	-	55.4						
		130.2	21.5	21948	1.4				73.9	102.1	-	-	55.4						
		116.9	24.0	19706	1.5				69.4	95.9	-	-	52.1						
		108.0	25.9	18206	1.6				69.4	95.9	-	-	52.1						
		93.0	30.1	15677	1.9				65.9	91.0	-	-	49.4						
		84.4	33.2	14228	2.7				62.3	86.1	-	-	46.7						
		74.2	37.7	12508	2.2				59.6	82.4	-	-	44.7						
	PL 35003*	88.6	15.8	29871	0.9	23.0	16.1	250M/4D	67.7	95.9	-	-	50.8	845	-	809	817	908	516-529
		83.2	16.8	28051	0.8				64.1	90.8	-	-	48.1						
		70.7	19.8	23836	1.1				59.8	84.7	-	-	44.8						
		64.8	21.6	21847	1.2				59.8	84.7	-	-	44.8						
		58.7	23.9	19791	1.3				56.2	79.6	-	-	42.1						
		53.7	26.1	18105	1.4				56.2	79.6	-	-	42.1						
	PL 35003*	164.1	17.1	27663	0.8	23.0	16.1	250M/2B	67.7	95.9	-	-	50.8	827	-	791	799	890	516-529
		158.1	17.7	26652	0.9				59.8	84.7	-	-	44.8						
		136.2	20.6	22960	1.0				59.8	84.7	-	-	44.8						
		121.1	23.1	20414	1.1				56.2	79.6	-	-	42.1						
		108.7	25.8	18324	1.2				56.2	79.6	-	-	42.1						
		99.6	28.1	16790	1.3				53.3	75.5	-	-	40.0						
		88.6	31.6	14936	1.6				53.3	75.5	-	-	40.0						
		83.2	33.7	14025	1.5				50.4	71.4	-	-	37.8						
		70.7	39.6	11918	2.0				48.2	68.3	-	-	36.2						
		64.8	43.2	10924	2.1				46.8	66.3	-	-	35.1						
		58.7	47.7	9895	2.3				46.1	65.3	-	-	34.6						
		53.7	52.1	9052	2.4				46.1	65.3	-	-	34.6						
	PL 30003*	88.6	15.8	29871	0.8	23.0	16.1	250M/4D	42.3	64.4	-	-	31.7	839	-	798	806	902	496-509
		73.5	19.0	24780	0.9				37.4	56.9	-	-	28.0						
		64.8	21.6	21847	1.0				37.4	56.9	-	-	28.0						
	PL 30003*	134.4	20.8	22656	0.9	23.0	16.1	250M/2B	37.4	56.9	-	-	28.0	821	-	780	788	884	496-509
		124.3	22.5	20954	1.0				35.1	53.4	-	-	26.3						
		102.9	27.2	17346	1.2				35.1	53.4	-	-	26.3						
		88.6	31.6	14936	1.3				33.3	50.7	-	-	25.0						
		73.5	38.1	12390	1.6				30.2	45.9	-	-	22.6						
		64.8	43.2	10924	1.7				29.3	44.5	-	-	21.9						

* Soğutucu gereklidir / Cooling is required / Kühlung ist erforderlich / È richiesto raffreddamento / Le refroidissement est nécessaire / Se requiere un enfriamiento

P1 (kW)		iges	n2 (rpm)	M2 (Nm)	fs	Pt (20°C) (kW)	Pt (40°C) (kW)	Motor IE2	FR (kN) MC	MS	PC	PS	CPC	~ Kg M…	P…	F	FS	CPC	mm
55.00	PL 25003*	88.0 73.1 60.5 55.4	15.9 19.2 23.1 25.3	29669 24645 20397 18678	0.8 0.9 1.0 1.1	20.0	14.0	250M/4D	42.3 37.4 36.0 35.1	64.4 56.9 54.8 53.4	- - - -	- - - -	31.7 28.0 27.0 26.3	808	-	772	780	869	476-489
	PL 25003*	128.4 114.4 106.3 95.0 88.0 73.1 60.5 55.4	21.8 24.5 26.3 29.5 31.8 38.3 46.3 50.5	21645 19285 17919 16015 14834 12323 10199 9339	1.0 0.8 1.1 1.0 1.3 1.6 1.8 1.9	20.0	14.0	250M/2B	37.4 35.1 35.1 33.3 33.3 30.2 29.3 28.8	56.9 53.4 53.4 50.7 50.7 45.9 44.5 43.8	- - - - - - - -	- - - - - - - -	28.0 26.3 26.3 25.0 25.0 22.6 21.9 21.6	790	-	754	762	851	476-489
	PL 18003*	81.4 73.3 65.0 53.8	34.4 38.2 43.1 52.0	13722 12356 10957 9069	0.8 0.9 1.0 1.2	17.0	11.9	250M/2B	21.0 20.1 19.5 19.2	37.1 35.5 34.5 33.9	49.0 46.9 45.5 44.8	65.1 62.3 60.5 59.5	15.8 15.1 14.6 14.4	710	737	679	715	760	452-469
	PL 16003*	82.1 75.2 62.9 57.6	34.1 37.2 44.5 48.6	13840 12677 10603 9710	0.8 0.9 1.0 1.1	15.0	10.5	250M/2B	21.0 21.0 19.5 19.2	37.1 37.1 34.5 33.9	49.0 49.0 45.5 44.8	65.1 65.1 60.5 59.5	15.8 15.8 14.6 14.4	697	724	665	702	747	428-445
	PL 10003*	57.6	48.6	9710	0.8	15.0	10.5	250M/2B	20.8	30.4	-	-	15.6	689	-	656	694	739	410-421
	PL 50002*	40.5 33.6 28.4	34.6 41.7 49.3	14150 11739 9922	1.6 1.9 2.7	38.0	26.6	250M/4D	62.3 59.6 57.0	86.1 82.4 78.7	- - -	- - -	46.7 44.7 42.7	961	-	903	916	1065	536-549
	PL 35002*	27.0 22.4 20.2	51.9 62.5 69.3	9433 7826 7057	2.0 2.8 2.5	34.0	23.8	250M/4D	46.1 42.5 41.0	65.3 60.2 58.1	- - -	- - -	34.6 31.9 30.8	829	-	793	801	892	516-529
	PL 30002*	35.1 29.1 22.4 17.1	39.9 48.1 62.5 81.9	12263 10167 7826 5974	1.2 1.4 2.3 2.8	34.0	23.8	250M/4D	30.2 28.8 26.6 24.3	45.9 43.8 40.4 37.0	- - - -	- - - -	22.6 21.6 19.9 18.2	823	-	782	790	884	496-509
	PL 25002*	43.8 36.3 30.2 26.0 23.0 20.0 17.7	32.0 38.6 46.4 53.8 60.9 70.0 79.1	15303 12682 10551 9084 8036 6988 6184	0.8 0.9 1.4 1.5 1.7 2.5 2.7	30.0	21.0	250M/4D	33.3 30.2 29.3 27.9 26.6 25.7 24.3	50.7 45.9 44.5 42.5 40.4 39.0 37.0	- - - - - - -	- - - - - - -	25.0 22.6 21.9 20.9 19.9 19.2 18.2	796	-	760	768	857	476-489
	PL 25002*	43.8 36.3 30.2 26.0 23.0	63.9 77.1 92.7 107.7 121.7	7651 6341 5276 4542 4018	1.4 1.6 2.4 2.7 3.0	30.0	21.0	250M/2B	26.1 25.2 23.2 23.0 21.8	39.7 38.4 35.3 34.9 33.2	- - - - -	- - - - -	19.6 18.9 17.4 17.2 16.4	751	-	715	723	812	476-489
	PL 18002*	30.0 24.9 21.4 19.0 15.7 13.0	46.7 56.2 65.4 73.7 89.2 107.7	10481 8699 7477 6638 5485 4542	0.9 1.0 1.2 1.3 1.8 2.1	25.0	17.5	250M/4D	19.5 18.6 17.4 16.8 15.6 14.9	34.5 32.9 30.7 29.7 27.6 26.2	45.5 43.4 40.6 39.2 36.4 34.7	60.5 57.7 53.9 52.1 48.4 46.0	14.6 14.0 13.1 12.6 11.7 11.1	716	743	684	721	766	452-469
	PL 18002*	30.0 24.9 21.4 19.0	93.3 112.4 130.8 147.4	5241 4350 3738 3319	1.6 1.9 2.1 2.3	25.0	17.5	250M/2B	15.5 14.6 13.8 13.8	27.3 25.7 24.4 24.4	36.1 34.0 32.2 32.2	47.9 45.1 42.8 42.8	11.6 10.9 10.4 10.4	698	725	666	703	748	452-469
	PL 16002*	22.1 16.2 13.4	63.3 86.4 104.5	7721 5660 4682	1.2 1.5 2.0	23.0	16.1	250M/4D	17.4 15.9 15.3	30.7 28.1 27.0	40.6 37.1 35.7	53.9 49.3 47.4	13.1 11.9 11.5	707	734	675	712	757	428-445
	PL 16002*	33.6 28.9 22.1 16.2	83.3 96.9 126.7 172.8	5870 5048 3861 2830	1.1 1.3 2.1 2.7	23.0	16.1	250M/2B	15.9 15.5 14.6 12.8	28.1 27.3 25.7 22.5	37.1 36.1 34.0 29.8	49.3 47.9 45.1 39.5	11.9 11.6 10.9 9.6	689	716	657	694	739	428-445
	PL 10002*	22.1 18.4 16.2 13.4	63.3 76.1 86.4 104.5	7721 6429 5660 4682	0.8 1.1 1.0 1.4	23.0	16.1	250M/4D	18.9 18.2 17.2 16.6	27.6 26.6 25.2 24.2	- - - -	- - - -	14.1 13.7 12.9 12.4	699	-	666	704	749	410-421

* Soğutucu gereklidir / Cooling is required / Kühlung ist erforderlich / È richiesto raffreddamento / Le refroidissement est nécessaire / Se requiere un enfriamiento

P1 (kW)		iges	n2 (rpm)	M2 (Nm)	fs	Pt (20°C) (kW)	Pt (40°C) (kW)	Motor IE2	FR (kN)					~ Kg					mm
									MC	MS	PC	PS	CPC	M...	P...	F	FS	CPC	
55.00	PL 10002*	33.6	83.3	5870	0.8	23.0	16.1	250M/2B	17.2	25.2	-	-	12.9	681	-	648	686	731	410-421
		28.9	96.9	5048	0.9				16.7	24.5	-	-	12.6						
		25.7	108.9	4489	1.2				16.6	24.2	-	-	12.4						
		22.1	126.7	3861	1.4				15.8	23.0	-	-	11.8						
		18.4	152.2	3214	1.9				14.5	21.1	-	-	10.8						
		16.2	172.8	2830	1.8				13.8	20.2	-	-	10.4						
		13.4	209.0	2341	2.4				13.5	19.7	-	-	10.1						
	PL 7002*	13.9	100.7	4856	0.8	18.0	12.6	250M/4D	-	-	29.3	35.2	22.0	-	664	646	667	680	392-403
	PL 7002*	22.9	122.3	4000	0.8	18.0	12.6	250M/2B	-	-	27.9	33.5	20.9	-	646	628	649	662	392-403
		20.6	135.9	3599	0.8				-	-	26.5	31.7	19.8						
		18.3	153.0	3197	1.0				-	-	25.6	30.7	19.2						
		13.9	201.4	2428	1.4				-	-	23.9	28.6	17.9						
	PL 5002*	16.2	172.8	2830	0.9	15.0	10.5	250M/2B	7.4	9.6	13.4	15.5	10.0	608	617	599	610	621	370-385
		13.4	209.0	2341	1.0				7.3	9.3	13.1	15.1	9.8						
	PL 16001*	6.75	207.4	2444	1.7	40.0	28.0	250M/4D	12.3	21.7	28.7	38.1	9.2	691	718	659	696	741	428-445
		5.60	250.0	2027	2.7				11.7	20.7	27.3	36.3	8.8						
	PL 10001*	6.75	207.4	2444	1.2	40.0	28.0	250M/4D	13.3	19.5	-	-	10.0	682	-	650	688	733	410-421
		5.60	250.0	2027	1.8				12.7	18.5	-	-	9.5						
		4.29	326.3	1553	2.9				11.9	17.3	-	-	8.9						
	PL 7001*	5.80	241.4	2100	1.0	30.0	21.0	250M/4D	-	-	22.7	27.3	17.0	-	652	634	655	668	392-403
		5.00	280.0	1810	1.4				-	-	21.9	26.2	16.4						
		4.43	316.0	1604	1.7				-	-	21.0	25.2	15.7						
		3.67	381.5	1329	2.2				-	-	20.1	24.2	15.1						
	PL 7001*	7.00	400.0	1267	1.3	30.0	21.0	250M/2B	-	-	19.6	23.5	14.7	-	634	616	637	650	392-403
		5.80	482.8	1050	1.8				-	-	18.7	22.4	14.0						
		5.00	560.0	905	2.4				-	-	17.8	21.4	13.4						
	PL 5001*	5.17	270.8	1872	0.9	20.0	14.0	250M/4D	6.7	8.6	12.0	13.9	9.0	618	627	610	620	631	370-385
		4.13	339.0	1495	1.3				6.3	8.1	11.3	13.1	8.5						
		3.78	370.4	1369	1.6				6.1	7.9	11.0	12.8	8.3						
	PL 5001*	7.25	386.2	1312	0.8	20.0	14.0	250M/2B	6.1	7.9	11.0	12.8	8.3	600	609	592	602	613	370-385
		6.00	466.7	1086	1.2				5.8	7.4	10.4	12.0	7.8						
		5.17	541.6	936	1.6				5.4	7.0	9.8	11.3	7.3						
		4.13	678.0	748	2.4				5.1	6.5	9.1	10.6	6.9						
		3.78	740.7	684	2.8				5.0	6.4	9.0	10.4	6.7						
	PL 2501*	4.13	339.0	1495	0.9	20.0	14.0	250M/4D	6.3	8.1	11.3	13.1	8.5	614	623	605	616	627	348-363
		3.78	370.4	1369	1.1				6.1	7.9	11.0	12.8	8.3						
	PL 2501*	6.00	466.7	1086	0.8	20.0	14.0	250M/2B	5.8	7.4	10.4	12.0	7.8	596	605	587	598	609	348-363
		5.17	541.6	936	1.1				5.4	7.0	9.8	11.3	7.3						
		4.13	678.0	748	1.6				5.1	6.5	9.1	10.6	6.9						
		3.78	740.7	684	1.9				5.0	6.4	9.0	10.4	6.7						
	PL 1601*	4.29	652.7	777	0.8	12.0	8.4	250M/2B	1.6	2.0	3.5	4.4	2.7	582	584	580	583	587	326-340
		3.56	786.5	644	1.0				1.5	1.9	3.4	4.2	2.5						
75.00	PL 90004*	244.6	5.7	108518	0.8	30.0	21.0	280M/4B	186.0	259.2	-	-	139.5	1385	-	1289	1311	1559	576-585
		224.0	6.3	99379	0.8				186.0	259.2	-	-	139.5						
	PL 90004*	462.6	6.1	102618	0.8	30.0	21.0	280M/2B	186.0	259.2	-	-	139.5	1337	-	1241	1263	1511	576-585
		429.7	6.5	95319	0.9				178.3	248.4	-	-	133.7						
		398.3	7.0	88354	0.9				178.3	248.4	-	-	133.7						
		355.8	7.9	78926	1.0				170.5	237.6	-	-	127.9						
		306.4	9.1	67968	1.2				162.8	226.8	-	-	122.1						
		270.6	10.3	60027	1.3				155.0	216.0	-	-	116.3						
		244.6	11.4	54259	1.4				155.0	216.0	-	-	116.3						
		224.0	12.5	49689	1.5				155.0	216.0	-	-	116.3						
	PL 65004*	333.7	8.4	74024	0.8	25.0	17.5	280M/2B	85.8	118.8	-	-	64.4	1149	-	1091	1105	1257	556-569
		301.7	9.3	66925	0.8				81.9	113.4	-	-	61.4						
		280.3	10.0	62178	0.9				78.0	108.0	-	-	58.5						
		256.7	10.9	56943	0.9				78.0	108.0	-	-	58.5						
		212.5	13.2	47138	1.1				73.3	101.5	-	-	55.0						
	PL 90003*	185.5	7.5	85283	0.8	45.0	31.5	280M/4B	170.5	237.6	-	-	127.9	1374	-	1278	1300	1548	576-585
		154.3	9.1	70939	0.9				162.8	226.8	-	-	122.1						
		133.1	10.5	61192	1.0				155.0	216.0	-	-	116.3						
		121.9	11.5	56043	1.4				155.0	216.0	-	-	116.3						
		117.8	11.9	54158	1.1				150.4	209.5	-	-	112.8						
		105.1	13.3	48319	1.5				150.4	209.5	-	-	112.8						
		93.1	15.0	42802	1.7				145.7	203.0	-	-	109.3						
		80.9	17.3	37194	1.9				138.0	192.2	-	-	103.5						
		71.6	19.6	32918	2.1				128.7	179.3	-	-	96.5						
		59.3	23.6	27263	2.4				124.0	172.8	-	-	93.0						

* Soğutucu gereklidir / Cooling is required / Kühlung ist erforderlich / È richiesto raffreddamento / Le refroidissement est nécessaire / Se requiere un enfriamiento

P1 (kW)		iges	n2 (rpm)	M2 (Nm)	fs	Pt (20°C) (kW)	Pt (40°C) (kW)	Motor IE2	FR (kN)					~ Kg					mm
									MC	MS	PC	PS	CPC	M...	P...	F	FS	CPC	
75.00		185.5	15.1	42641	1.4				145.7	203.0	-	-	109.3						
		154.3	18.1	35469	1.6				128.7	179.3	-	-	96.5						
		133.1	21.0	30596	1.8				128.7	179.3	-	-	96.5						
	PL 90003*	121.9	23.0	28022	2.4	45.0	31.5	280M/2B	120.9	168.5	-	-	90.7	1326	-	1230	1252	1500	576-585
		117.8	23.8	27079	2.0				120.9	168.5	-	-	90.7						
		105.1	26.6	24160	2.7				120.9	168.5	-	-	90.7						
		93.1	30.1	21401	3.0				114.7	159.8	-	-	86.0						
		139.1	10.1	63951	0.9				78.0	108.0	-	-	58.5						
		115.7	12.1	53193	1.0				75.7	104.8	-	-	56.7						
		99.7	14.0	45837	1.1				73.3	101.5	-	-	55.0						
	PL 65003*	88.3	15.9	40596	1.2	35.0	24.5	280M/4B	73.3	101.5	-	-	55.0	1185	-	1127	1141	1293	556-569
		73.1	19.2	33607	1.5				64.7	89.6	-	-	48.6						
		68.0	20.6	31263	1.5				64.7	89.6	-	-	48.6						
		56.3	24.9	25884	1.8				60.8	84.2	-	-	45.6						
		167.8	16.7	38573	1.3				73.3	101.5	-	-	55.0						
		139.1	20.1	31975	1.5				64.7	89.6	-	-	48.6						
		115.7	24.2	26596	1.8				60.8	84.2	-	-	45.6						
	PL 65003*	99.7	28.1	22918	2.0	35.0	24.5	280M/2B	57.7	79.9	-	-	43.3	1137	-	1079	1093	1245	556-569
		88.3	31.7	20298	2.2				57.7	79.9	-	-	43.3						
		73.1	38.3	16804	2.6				52.3	72.4	-	-	39.2						
		68.0	41.2	15631	2.7				52.3	72.4	-	-	39.2						
		93.0	15.1	42756	0.8				83.7	115.6	-	-	62.7						
		84.4	16.6	38803	1.1				83.7	115.6	-	-	62.7						
	PL 50003*	74.2	18.9	34113	0.9	25.0	17.5	280M/4B	79.2	109.5	-	-	59.4	1097	-	1039	1052	1201	536-549
		64.0	21.9	29424	1.4				71.2	98.4	-	-	53.4						
		53.1	26.4	24413	1.7				69.4	95.9	-	-	52.1						
		170.1	16.5	39101	0.8				83.7	115.6	-	-	62.7						
		157.3	17.8	36159	0.9				73.9	102.1	-	-	55.4						
		138.6	20.2	31860	0.8				73.9	102.1	-	-	55.4						
		130.2	21.5	29930	1.0				73.9	102.1	-	-	55.4						
		116.9	24.0	26872	1.1				69.4	95.9	-	-	52.1						
	PL 50003*	108.0	25.9	24826	1.2	25.0	17.5	280M/2B	69.4	95.9	-	-	52.1	1049	-	991	1004	1153	536-549
		93.0	30.1	21378	1.4				65.9	91.0	-	-	49.4						
		84.4	33.2	19401	2.0				62.3	86.1	-	-	46.7						
		74.2	37.7	17057	1.6				59.6	82.4	-	-	44.7						
		64.0	43.8	14712	2.5				57.9	80.0	-	-	43.4						
		53.1	52.7	12206	2.9				55.2	76.3	-	-	41.4						
		70.7	19.8	32504	0.8				59.8	84.7	-	-	44.8						
	PL 35003*	64.8	21.6	29792	0.9	23.0	16.1	280M/4B	59.8	84.7	-	-	44.8	965	-	929	937	1028	516-529
		58.7	23.9	26987	0.9				56.2	79.6	-	-	42.1						
		53.7	26.1	24688	1.0				56.2	79.6	-	-	42.1						
		121.1	23.1	27838	0.8				56.2	79.6	-	-	42.1						
		108.7	25.8	24987	0.9				56.2	79.6	-	-	42.1						
		99.6	28.1	22895	0.9				53.3	75.5	-	-	40.0						
		88.6	31.6	20367	1.2				53.3	75.5	-	-	40.0						
	PL 35003*	83.2	33.7	19125	1.1	23.0	16.1	280M/2B	50.4	71.4	-	-	37.8	917	-	881	889	980	516-529
		70.7	39.6	16252	1.4				48.2	68.3	-	-	36.2						
		64.8	43.2	14896	1.5				46.8	66.3	-	-	35.1						
		58.7	47.7	13494	1.7				46.1	65.3	-	-	34.6						
		53.7	52.1	12344	1.8				46.1	65.3	-	-	34.6						
		102.9	27.2	23654	0.9				35.1	53.4	-	-	26.3						
	PL 30003*	88.6	31.6	20367	1.0	23.0	16.1	280M/2B	33.3	50.7	-	-	25.0	911	-	870	878	974	496-509
		73.5	38.1	16896	1.2				30.2	45.9	-	-	22.6						
		64.8	43.2	14896	1.3				29.3	44.5	-	-	21.9						
	PL 25003*	60.5	23.1	27815	0.8	20.0	14.0	280M/4B	36.0	54.8	-	-	27.0	928	-	892	900	989	476-489
		55.4	25.3	25470	0.8				35.1	53.4	-	-	26.3						
		106.3	26.3	24436	0.8				35.1	53.4	-	-	26.3						
		88.0	31.8	20229	1.0				33.3	50.7	-	-	25.0						
	PL 25003*	73.1	38.3	16804	1.2	20.0	14.0	280M/2B	30.2	45.9	-	-	22.6	880	-	844	852	941	476-489
		60.5	46.3	13907	1.3				29.3	44.5	-	-	21.9						
		55.4	50.5	12735	1.4				28.8	43.8	-	-	21.6						
	PL 18003*	53.8	52.0	12367	0.9	17.0	11.9	280M/2B	19.2	33.9	44.8	59.5	14.4	800	827	769	805	850	452-469
	PL 16003*	62.9	44.5	14459	0.8	15.0	10.5	280M/2B	19.5	34.5	45.5	60.5	14.6	787	814	755	792	837	428-445
		57.6	48.6	13241	0.8				19.2	33.9	44.8	59.5	14.4						
		40.5	34.6	19295	1.2				62.3	86.1	-	-	46.7						
		33.6	41.7	16008	1.4				59.6	82.4	-	-	44.7						
	PL 50002*	28.4	49.3	13530	2.0	38.0	26.6	280M/4B	57.0	78.7	-	-	42.7	1081	-	1023	1036	1185	536-549
		26.7	52.4	12720	2.8				57.0	78.7	-	-	42.7						
		21.7	64.5	10338	2.5				51.6	71.3	-	-	38.7						

* Soğutucu gereklidir / Cooling is required / Kühlung ist erforderlich / È richiesto raffreddamento / Le refroidissement est nécessaire / Se requiere un enfriamiento

P1 (kW)		iges	n2 (rpm)	M2 (Nm)	fs	Pt (20°C) (kW)	Pt (40°C) (kW)	Motor IE2	FR (kN) MC	MS	PC	PS	CPC	~ Kg M…	P…	F	FS	CPC	mm
75.00	PL 35002*	27.0 22.4 20.2 17.1 14.2	51.9 62.5 69.3 81.9 98.6	12863 10672 9624 8147 6765	1.5 2.0 1.9 2.5 2.9	34.0	23.8	280M/4B	46.1 42.5 41.0 38.9 36.7	65.3 60.2 58.1 55.1 52.0	- - - - -	- - - - -	34.6 31.9 30.8 29.2 27.5	949	-	913	921	1012	516-529
	PL 30002*	35.1 29.1 22.4 17.1 14.2	39.9 48.1 62.5 81.9 98.6	16722 13864 10672 8147 6765	0.9 1.0 1.7 2.1 2.4	34.0	23.8	280M/4B	30.2 28.8 26.6 24.3 23.0	45.9 43.8 40.4 37.0 34.9	- - - - -	- - - - -	22.6 21.6 19.9 18.2 17.2	943	-	902	910	1004	496-509
	PL 25002*	30.2 26.0 23.0 20.0 17.7 14.7	46.4 53.8 60.9 70.0 79.1 95.2	14388 12387 10958 9528 8433 7003	1.0 1.1 1.3 1.8 2.0 2.4	30.0	21.0	280M/4B	29.3 27.9 26.6 25.7 24.3 23.2	44.5 42.5 40.4 39.0 37.0 35.3	- - - - - -	- - - - - -	21.9 20.9 19.9 19.2 18.2 17.4	916	-	880	888	977	476-489
	PL 25002*	43.8 36.3 30.2 26.0 23.0	63.9 77.1 92.7 107.7 121.7	10434 8647 7194 6193 5479	1.0 1.2 1.8 2.0 2.2	30.0	21.0	280M/2B	26.1 25.2 23.2 23.0 21.8	39.7 38.4 35.3 34.9 33.2	- - - - -	- - - - -	19.6 18.9 17.4 17.2 16.4	841	-	805	813	902	476-489
	PL 18002*	24.9 21.4 19.0 15.7 13.0	56.2 65.4 73.7 89.2 107.7	11863 10195 9052 7480 6193	0.8 0.9 1.0 1.3 1.5	25.0	17.5	280M/4B	18.6 17.4 16.8 15.6 14.9	32.9 30.7 29.7 27.6 26.2	43.4 40.6 39.2 36.4 34.7	57.7 53.9 52.1 48.4 46.0	14.0 13.1 12.6 11.7 11.1	836	863	804	841	886	452-469
	PL 18002*	30.0 24.9 21.4 19.0 15.7 13.0	93.3 112.4 130.8 147.4 178.3 215.4	7146 5931 5098 4526 3740 3097	1.2 1.4 1.5 1.7 2.3 2.7	25.0	17.5	280M/2B	15.5 14.6 13.8 13.8 12.8 12.2	27.3 25.7 24.4 24.4 22.5 21.5	36.1 34.0 32.2 32.2 29.8 28.4	47.9 45.1 42.8 42.8 39.5 37.7	11.6 10.9 10.4 10.4 9.6 9.1	788	815	756	793	838	452-469
	PL 16002*	22.1 16.2 13.4	63.3 86.4 104.5	10529 7718 6384	0.9 1.1 1.5	23.0	16.1	280M/4B	17.4 15.9 15.3	30.7 28.1 27.0	40.6 37.1 35.7	53.9 49.3 47.4	13.1 11.9 11.5	827	854	795	832	877	428-445
	PL 16002*	33.6 28.9 22.1 16.2 13.4	83.3 96.9 126.7 172.8 209.0	8004 6884 5264 3859 3192	0.8 0.9 1.5 1.9 2.6	23.0	16.1	280M/2B	15.9 15.5 14.6 12.8 12.5	28.1 27.3 25.7 22.5 22.0	37.1 36.1 34.0 29.8 29.1	49.3 47.9 45.1 39.5 38.6	11.9 11.6 10.9 9.6 9.3	779	806	747	784	829	428-445
	PL 10002*	18.4 13.4	76.1 104.5	8766 6384	0.8 1.0	23.0	16.1	280M/4B	18.2 16.6	26.6 24.2	- -	- -	13.7 12.4	819	-	786	824	869	410-421
	PL 10002*	25.7 22.1 18.4 16.2 13.4	108.9 126.7 152.2 172.8 209.0	6122 5264 4383 3859 3192	0.9 1.0 1.4 1.3 1.8	23.0	16.1	280M/2B	16.6 15.8 14.5 13.8 13.5	24.2 23.0 21.1 20.2 19.7	- - - - -	- - - - -	12.4 11.8 10.8 10.4 10.1	771	-	738	776	821	410-421
	PL 7002*	13.9	201.4	3311	1.0	18.0	12.6	280M/2B	-	-	23.9	28.6	17.9	-	736	718	739	752	392-403
	PL 25001*	6.25	224.0	3086	2.7	50.0	35.0	280M/4B	18.2	27.7	-	-	13.7	889	-	853	861	950	476-489
	PL 16001*	6.75 5.60	207.4 250.0	3332 2765	1.3 2.0	40.0	28.0	280M/4B	12.3 11.7	21.7 20.7	28.7 27.3	38.1 36.3	9.2 8.8	811	838	779	816	861	428-445
	PL 10001*	6.75 5.60 4.29 3.56	207.4 250.0 326.3 393.3	3332 2765 2118 1758	0.9 1.3 2.1 2.9	40.0	28.0	280M/4B	13.3 12.7 11.9 11.1	19.5 18.5 17.3 16.2	- - - -	- - - -	10.0 9.5 8.9 8.3	802	-	770	808	853	410-421
	PL 7001*	5.80 5.00 4.43 3.67	241.4 280.0 316.0 381.5	2863 2469 2187 1812	0.8 1.0 1.3 1.6	30.0	21.0	280M/4B	- - - -	- - - -	22.7 21.9 21.0 20.1	27.3 26.2 25.2 24.2	17.0 16.4 15.7 15.1	-	772	754	775	788	392-403
	PL 7001*	7.00 5.80 5.00 4.43 3.67	400.0 482.8 560.0 632.1 762.9	1728 1432 1234 1094 906	0.9 1.3 1.8 2.2 2.9	30.0	21.0	280M/2B	- - - - -	- - - - -	19.6 18.7 17.8 17.0 16.4	23.5 22.4 21.4 20.4 19.7	14.7 14.0 13.4 12.7 12.3	-	724	706	727	740	392-403
	PL 5001*	4.13 3.78	339.0 370.4	2039 1866	1.0 1.1	20.0	14.0	280M/4B	6.3 6.1	8.1 7.9	11.3 11.0	13.1 12.8	8.5 8.3	738	747	730	740	751	370-385

* Soğutucu gereklidir / Cooling is required / Kühlung ist erforderlich / È richiesto raffreddamento / Le refroidissement est nécessaire / Se requiere un enfriamiento

P1 (kW)		iges	n2 (rpm)	M2 (Nm)	fs	Pt (20°C) (kW)	Pt (40°C) (kW)	Motor IE2	FR (kN) MC	MS	PC	PS	CPC	~ Kg M…	P…	F	FS	CPC	mm
75.00	PL 5001*	6.00 5.17 4.13 3.78	466.7 541.6 678.0 740.7	1481 1276 1019 933	0.9 1.2 1.7 2.0	20.0	14.0	280M/2B	5.8 5.4 5.1 5.0	7.4 7.0 6.5 6.4	10.4 9.8 9.1 9.0	12.0 11.3 10.6 10.4	7.8 7.3 6.9 6.7	690	699	682	692	703	370-385
	PL 2501*	3.78	370.4	1866	0.8	20.0	14.0	280M/4B	6.1	7.9	11.0	12.8	8.3	734	743	725	736	747	348-363
	PL 2501*	5.17 4.13 3.78	541.6 678.0 740.7	1276 1019 933	0.8 1.2 1.4	20.0	14.0	280M/2B	5.4 5.1 5.0	7.0 6.5 6.4	9.8 9.1 9.0	11.3 10.6 10.4	7.3 6.9 6.7	686	695	677	688	699	348-363
90.00	PL 90004*	398.3 355.8 306.4 270.6 244.6 224.0	7.0 7.9 9.1 10.3 11.4 12.5	106025 94712 81562 72032 65111 59627	0.8 0.9 1.0 1.1 1.2 1.3	30.0	21.0	280M/2C	178.3 170.5 162.8 155.0 155.0 155.0	248.4 237.6 226.8 216.0 216.0 216.0	- - - - - -	- - - - - -	133.7 127.9 122.1 116.3 116.3 116.3	1348	-	1252	1274	1522	576-585
	PL 65004*	256.7 212.5	10.9 13.2	68332 56566	0.8 0.9	25.0	17.5	280M/2C	78.0 73.3	108.0 101.5	- -	- -	58.5 55.0	1160	-	1102	1116	1268	556-569
	PL 90003*	133.1 121.9 117.8 105.1 93.1 80.9 71.6 59.3	10.5 11.5 11.9 13.3 15.0 17.3 19.6 23.6	73431 67252 64990 57983 51363 44632 39501 32716	0.8 1.1 0.9 1.3 1.4 1.6 1.8 2.0	45.0	31.5	280M/4C	155.0 155.0 150.4 150.4 145.7 138.0 128.7 124.0	216.0 216.0 209.5 209.5 203.0 192.2 179.3 172.8	- - - - - - - -	- - - - - - - -	116.3 116.3 112.8 112.8 109.3 103.5 96.5 93.0	1388	-	1292	1314	1562	576-585
	PL 90003*	185.5 154.3 133.1 121.9 117.8 105.1 93.1 80.9	15.1 18.1 21.0 23.0 23.8 26.6 30.1 34.6	51170 42563 36715 33626 32495 28992 25681 22316	1.1 1.3 1.5 2.0 1.6 2.3 2.5 2.9	45.0	31.5	280M/2C	145.7 128.7 128.7 120.9 120.9 120.9 114.7 108.5	203.0 179.3 179.3 168.5 168.5 168.5 159.8 151.2	- - - - - - - -	- - - - - - - -	109.3 96.5 96.5 90.7 90.7 90.7 86.0 81.4	1337	-	1241	1263	1511	576-585
	PL 65003*	115.7 99.7 88.3 73.1 68.0 56.3	12.1 14.0 15.9 19.2 20.6 24.9	63831 55004 48715 40329 37515 31060	0.8 0.9 1.0 1.2 1.3 1.5	35.0	24.5	280M/4C	75.7 73.3 73.3 64.7 64.7 60.8	104.8 101.5 101.5 89.6 89.6 84.2	- - - - - -	- - - - - -	56.7 55.0 55.0 48.6 48.6 45.6	1199	-	1141	1155	1307	556-569
	PL 65003*	167.8 139.1 115.7 99.7 88.3 73.1 68.0 56.3	16.7 20.1 24.2 28.1 31.7 38.3 41.2 49.7	46287 38370 31916 27502 24357 20164 18758 15530	1.1 1.3 1.5 1.7 1.8 2.2 2.3 2.6	35.0	24.5	280M/2C	73.3 64.7 60.8 57.7 57.7 52.3 52.3 49.9	101.5 89.6 84.2 79.9 79.9 72.4 72.4 69.1	- - - - - - - -	- - - - - - - -	55.0 48.6 45.6 43.3 43.3 39.2 39.2 37.4	1148	-	1090	1104	1256	556-569
	PL 50003*	84.4 74.2 64.0 53.1	16.6 18.9 21.9 26.4	46563 40936 35309 29295	0.9 0.8 1.2 1.4	25.0	17.5	280M/4C	83.7 79.2 71.2 69.4	115.6 109.5 98.4 95.9	- - - -	- - - -	62.7 59.4 53.4 52.1	1111	-	1053	1066	1215	536-549
	PL 50003*	130.2 116.9 108.0 93.0 84.4 74.2 64.0 53.1	21.5 24.0 25.9 30.1 33.2 37.7 43.8 52.7	35915 32247 29792 25654 23282 20468 17654 14648	0.8 0.9 1.0 1.1 1.7 1.4 2.1 2.4	25.0	17.5	280M/2C	73.9 69.4 69.4 65.9 62.3 59.6 57.9 55.2	102.1 95.9 95.9 91.0 86.1 82.4 80.0 76.3	- - - - - - - -	- - - - - - - -	55.4 52.1 52.1 49.4 46.7 44.7 43.4 41.4	1060	-	1002	1015	1164	536-549
	PL 35003*	58.7 53.7	23.9 26.1	32385 29626	0.8 0.8	23.0	16.1	280M/4C	56.2 56.2	79.6 79.6	- -	- -	42.1 42.1	979	-	943	951	1042	516-529
	PL 35003*	99.6 88.6 83.2 70.7 64.8 58.7 53.7	28.1 31.6 33.7 39.6 43.2 47.7 52.1	27474 24440 22951 19502 17875 16192 14813	0.8 1.0 0.9 1.2 1.3 1.4 1.5	23.0	16.1	280M/2C	53.3 53.3 50.4 48.2 46.8 46.1 46.1	75.5 75.5 71.4 68.3 66.3 65.3 65.3	- - - - - - -	- - - - - - -	40.0 40.0 37.8 36.2 35.1 34.6 34.6	928	-	892	900	991	516-529
	PL 30003*	88.6 73.5 64.8	31.6 38.1 43.2	24440 20275 17875	0.8 1.0 1.1	23.0	16.1	280M/2C	33.3 30.2 29.3	50.7 45.9 44.5	- - -	- - -	25.0 22.6 21.9	922	-	881	889	985	496-509

* Soğutucu gereklidir / Cooling is required / Kühlung ist erforderlich / È richiesto raffreddamento / Le refroidissement est nécessaire / Se requiere un enfriamiento

P1 (kW)		iges	n2 (rpm)	M2 (Nm)	fs	Pt (20°C) (kW)	Pt (40°C) (kW)	Motor IE2	FR (kN) MC	MS	PC	PS	CPC	~ Kg M…	P…	F	FS	CPC	mm
90.00	PL 25003*	88.0 73.1 60.5 55.4	31.8 38.3 46.3 50.5	24275 20164 16689 15282	0.8 1.0 1.1 1.2	20.0	14.0	280M/2C	33.3 30.2 29.3 28.8	50.7 45.9 44.5 43.8	- - - -	- - - -	25.0 22.6 21.9 21.6	891	-	855	863	952	476-489
	PL 90002*	32.0 26.6	43.8 52.6	18295 15207	2.6 3.0	65.0	45.5	280M/4C	102.3 97.7	142.6 136.1	- -	- -	76.7 73.2	1361	-	1265	1287	1535	576-585
	PL 65002*	24.0	58.3	13721	2.9	50.0	35.0	280M/4C	46.0	63.7	-	-	34.5	1172	-	1114	1128	1280	556-569
	PL 50002*	40.5 33.6 28.4 26.7 21.7	34.6 41.7 49.3 52.4 64.5	23154 19209 16236 15265 12406	1.0 1.1 1.6 2.3 2.0	38.0	26.6	280M/4C	62.3 59.6 57.0 57.0 51.6	86.1 82.4 78.7 78.7 71.3	- - - - -	- - - - -	46.7 44.7 42.7 42.7 38.7	1095	-	1037	1050	1199	536-549
	PL 35002*	27.0 22.4 20.2 17.1 14.2	51.9 62.5 69.3 81.9 98.6	15436 12806 11548 9776 8118	1.2 1.7 1.6 2.1 2.5	34.0	23.8	280M/4C	46.1 42.5 41.0 38.9 36.7	65.3 60.2 58.1 55.1 52.0	- - - - -	- - - - -	34.6 31.9 30.8 29.2 27.5	963	-	927	935	1026	516-529
	PL 30002*	29.1 22.4 17.1 14.2	48.1 62.5 81.9 98.6	16637 12806 9776 8118	0.9 1.4 1.7 2.0	34.0	23.8	280M/4C	28.8 26.6 24.3 23.0	43.8 40.4 37.0 34.9	- - - -	- - - -	21.6 19.9 18.2 17.2	957	-	916	924	1018	496-509
	PL 25002*	30.2 26.0 23.0 20.0 17.7 14.7	46.4 53.8 60.9 70.0 79.1 95.2	17266 14864 13149 11434 10119 8404	0.8 0.9 1.0 1.5 1.7 2.0	30.0	21.0	280M/4C	29.3 27.9 26.6 25.7 24.3 23.2	44.5 42.5 40.4 39.0 37.0 35.3	- - - - - -	- - - - - -	21.9 20.9 19.9 19.2 18.2 17.4	930	-	894	902	991	476-489
	PL 25002*	43.8 36.3 30.2 26.0 23.0 20.0 17.7	63.9 77.1 92.7 107.7 121.7 140.0 158.2	12520 10376 8633 7432 6575 5717 5060	0.8 1.0 1.5 1.7 1.8 2.7 2.9	30.0	21.0	280M/2C	26.1 25.2 23.2 23.0 21.8 20.7 20.0	39.7 38.4 35.3 34.9 33.2 31.5 30.5	- - - - - - -	- - - - - - -	19.6 18.9 17.4 17.2 16.4 15.5 15.0	852	-	816	824	913	476-489
	PL 18002*	19.0 15.7 13.0	73.7 89.2 107.7	10862 8976 7432	0.8 1.1 1.3	25.0	17.5	280M/4C	16.8 15.6 14.9	29.7 27.6 26.2	39.2 36.4 34.7	52.1 48.4 46.0	12.6 11.7 11.1	850	877	818	855	900	452-469
	PL 18002*	30.0 24.9 21.4 19.0 15.7 13.0	93.3 112.4 130.8 147.4 178.3 215.4	8576 7118 6117 5431 4488 3716	1.0 1.1 1.3 1.4 1.9 2.2	25.0	17.5	280M/2C	15.5 14.6 13.8 13.8 12.8 12.2	27.3 25.7 24.4 24.4 22.5 21.5	36.1 34.0 32.2 32.2 29.8 28.4	47.9 45.1 42.8 42.8 39.5 37.7	11.6 10.9 10.4 10.4 9.6 9.1	799	826	767	804	849	452-469
	PL 16002*	16.2 13.4	86.4 104.5	9262 7661	0.9 1.2	23.0	16.1	280M/4C	15.9 15.3	28.1 27.0	37.1 35.7	49.3 47.4	11.9 11.5	841	868	809	846	891	428-445
	PL 16002*	28.9 22.1 16.2 13.4	96.9 126.7 172.8 209.0	8261 6317 4631 3830	0.8 1.3 1.6 2.2	23.0	16.1	280M/2C	12.5 12.8 14.6 15.5	27.3 25.7 22.5 22.0	36.1 34.0 29.8 29.1	47.9 45.1 39.5 38.6	11.6 10.9 9.6 9.3	790	817	758	795	840	428-445
	PL 10002*	13.4	104.5	7661	0.8	23.0	16.1	280M/4C	16.6	24.2	-	-	12.4	833	-	800	838	883	410-421
	PL 10002*	22.1 18.4 16.2 13.4	126.7 152.2 172.8 209.0	6317 5260 4631 3830	0.8 1.1 1.1 1.5	23.0	16.1	280M/2C	15.8 14.5 13.8 13.5	23.0 21.1 20.2 19.7	- - - -	- - - -	11.8 10.8 10.4 10.1	782	-	749	787	832	410-421
	PL 7002*	13.9	201.4	3973	0.8	18.0	12.6	280M/2C	-	-	23.9	28.6	17.9	-	747	729	750	763	392-403
	PL 25001*	6.25	224.0	3703	2.3	50.0	35.0	280M/4C	18.2	27.7	-	-	13.7	903	-	867	875	964	476-489
	PL 16001*	6.75 5.60 4.29	207.4 250.0 326.3	3999 3318 2542	1.1 1.6 2.6	40.0	28.0	280M/4C	12.3 11.7 11.0	21.7 20.7 19.3	28.7 27.3 25.6	38.1 36.3 33.9	9.2 8.8 8.2	825	852	793	830	875	428-445
	PL 10001*	5.60 4.29 3.56	250.0 326.3 393.3	3318 2542 2109	1.1 1.8 2.4	40.0	28.0	280M/4C	12.7 11.9 11.1	18.5 17.3 16.2	- - -	- - -	9.5 8.9 8.3	816	-	784	822	867	410-421
	PL 7001*	5.00 4.43 3.67	280.0 316.0 381.5	2962 2625 2174	0.8 1.0 1.4	30.0	21.0	280M/4C	- - -	- - -	21.9 21.0 20.1	26.2 25.2 24.2	16.4 15.7 15.1	-	786	768	789	802	392-403

* Soğutucu gereklidir / Cooling is required / Kühlung ist erforderlich / È richiesto raffreddamento / Le refroidissement est nécessaire / Se requiere un enfriamiento

P1 (kW)		iges	n2 (rpm)	M2 (Nm)	fs	Pt (20°C) (kW)	Pt (40°C) (kW)	Motor IE2	FR (kN)					~ Kg					mm
									MC	MS	PC	PS	CPC	M...	P...	F	FS	CPC	
90.00	PL 7001*	7.00 5.80 5.00 4.43 3.67	400.0 482.8 560.0 632.1 762.9	2074 1718 1481 1312 1087	0.8 1.1 1.5 1.9 2.4	30.0	21.0	280M/2C	- - - - -	- - - - -	19.6 18.7 17.8 17.0 16.4	23.5 22.4 21.4 20.4 19.7	14.7 14.0 13.4 12.7 12.3	-	735	717	738	751	392-403
	PL 5001*	4.13 3.78	339.0 370.4	2447 2239	0.8 1.0	20.0	14.0	280M/4C	6.3 6.1	8.1 7.9	11.3 11.0	13.1 12.8	8.5 8.3	752	761	744	754	765	370-385
	PL 5001*	6.00 5.17 4.13 3.78	466.7 541.6 678.0 740.7	1777 1531 1223 1120	0.8 1.0 1.4 1.7	20.0	14.0	280M/2C	5.8 5.4 5.1 5.0	7.4 7.0 6.5 6.4	10.4 9.8 9.1 9.0	12.0 11.3 10.6 10.4	7.8 7.3 6.9 6.7	701	710	693	703	714	370-385
	PL 2501*	4.13 3.78	678.0 740.7	1223 1120	1.0 1.2	20.0	14.0	280M/2C	5.1 5.0	6.5 6.4	9.1 9.0	10.6 10.4	6.9 6.7	697	706	688	699	710	348-363

* Soğutucu gereklidir / Cooling is required / Kühlung ist erforderlich / È richiesto raffreddamento / Le refroidissement est nécessaire / Se requiere un enfriamiento

Motorlu Seçim Tabloları

Selection Tables of Gearedmotors

Auswahltabellen der Getriebemotoren

Tabelle di selezione dei motoriduttori

Tables de Gearedmotors de sélection

Tablas de selección de gearedmotors

PLB

TR TEKNİK TANIMLAR | EN TECHNICAL DESCRIPTIONS | DE TECHNISCHE BESCHREIBUNGEN

IT DESCRIZIONI TECNICHE | FR DESCRIPTIONS TECHNIQUES | ES DESCRIPCIONES TECNICAS

Motorlu redüktör performans tablolarının yapısı
Notify about performance tables for Geared motor.
Mitteilung über Leistungstafeln für Getriebemotor
Notificare sulle tabelle di performance per i motoriduttori
Aviser sur les tableux de performance pour le motoréducteur
Notificar sobre la tabla de performance para los motoreductores.

0.75 kW →

Redüktör motor gücü
Gear unit motor power
Potenza motore riduttore
Potencia del motor del reductor
Réducteur puissance du moteur
Getriebe Motorleistung

Motor gücü
Rated motor power
Motornennleistung
Potenza nominale del motore
Puissance nominale du moteur
Potencia nominal del motor

Çıkış devri
Output speed
Abtriebsdrehzahl
Vitesse de sortie
Velocità di uscita
Velocidad de salida

Termal Güç
Thermal power
Thermische leistung
Potenza termica
Puissance thermique
Potencia térmica

Müsaade edilebilir radyal yükler
Permissible radial force
Zulässige Radialkraft
Force radiale admissible
Fuerza radial admisible
Forza radiale ammessa

Ağırlık
Weight
Gewicht
Peso
Poids
Peso

P1 (kW)		iges	n2 (rpm)	M2 (Nm)	fs	Pt (20°C) (kW)	Pt (40°C) (kW)	Motor IE2	FR (kN)					~ Kg					
									MC	MS	PC	PS	CPC	M...	P...	F	FS	CPC	
0.75		969.0	0.9	6687	1.1				65.0	95.0	-	-	48.8						
		803.9	1.1	5548	1.7				65.0	95.0	-	-	48.8						
		665.3	1.4	4591	2.0				65.0	95.0	-	-	48.8						
	PLB 10004	551.9	1.6	3809	2.3	11.0	7.7	90L/6C	55.3	80.8	-	-	41.4	163	-	131	168	213	418-428
		510.4	1.8	3522	2.5				55.3	80.8	-	-	41.4						
		457.4	2.0	3157	2.7				55.3	80.8	-	-	41.4						
		418.9	2.1	2891	2.9				55.3	80.8	-	-	41.4						

Redüktör tipi
Type of gear unit
Getriebe typ
Tipo di riduttore
Type de réducteur
Tipo de Reductor

Tahvil oranı
Reduction ratio
Untersetzungsverhältnis
Rapporto di riduzione
Rapport de réduction
Relación de reducción

Çıkış momenti
Output torque
Abtriebsdrehmoment
Coppia di uscita
Par de salida
Couple de sortie

Servis faktörü
Service factor
Factor de servicio
Fattore di servizio
Facteur de service
Servicefaktor

Motor tipi
Type of motor
Motor typ
Tipo di motore
Type de moteur
Tipo de motor

Ölçü sayfaları
Drawing page
Zeichenblatt
La page de dessin
Página de dibujo
Zeichenblatt

P1 (kW)		iges	n2 (rpm)	M2 (Nm)	fs	Pt (20°C) (kW)	Pt (40°C) (kW)	Motor IE2	FR (kN)					~ Kg					mm
									MC	MS	PC	PS	CPC	M...	P...	F	FS	CPC	
0.75	PLB 25004	1726.9 1430.9	0.5 0.6	11918 9875	2.0 2.4	15.0	10.5	90L/6C	90.0 90.0	137.0 137.0	- -	- -	67.5 67.5	289	-	253	261	352	476-489
	PLB 25004	1726.9	0.8	7661	2.9	15.0	10.5	80M/4D	90.0	137.0	-	-	67.5	283.5	-	247.5	255.5	346.5	476-489
	PLB 18004	981.2	0.9	6772	2.8	13.0	9.1	90L/6C	60.0	106.0	140.0	186.0	45.0	196	223	165	201	246	452-469
	PLB 16004	969.0 803.9	0.9 1.1	6687 5548	1.8 2.8	11.0	7.7	90L/6C	60.0 60.0	106.0 106.0	140.0 140.0	186.0 186.0	45.0 45.0	171	198	140	176	221	428-445
	PLB 16004	969.0	1.4	4299	2.6	11.0	7.7	80M/4D	60.0	106.0	140.0	186.0	45.0	165.5	192.5	134.5	170.5	215.5	428-445
	PLB 10004	969.0 803.9 665.3 551.9 510.4 457.4 418.9	0.9 1.1 1.4 1.6 1.8 2.0 2.1	6687 5548 4591 3809 3522 3157 2891	1.1 1.7 2.0 2.3 2.5 2.7 2.9	11.0	7.7	90L/6C	65.0 65.0 65.0 55.3 55.3 55.3 55.3	95.0 95.0 95.0 80.8 80.8 80.8 80.8	- - - - - - -	- - - - - - -	48.8 48.8 48.8 41.4 41.4 41.4 41.4	163	-	131	168	213	410-421
	PLB 10004	969.0 803.9 665.3	1.4 1.7 2.1	4299 3567 2952	1.6 2.4 2.8	11.0	7.7	80M/4D	65.0 55.3 55.3	95.0 80.8 80.8	- - -	- - -	48.8 41.4 41.4	157.5	-	125.5	162.5	207.5	410-421
	PLB 10004	969.0	2.9	2150	2.8	11.0	7.7	80M/2B	50.4	73.6	-	-	37.8	156	-	124	161	206	410-421
	PLB 7004	1069.0 921.5 832.6 717.7 656.7 594.0 557.0 511.5 453.0 393.0 361.7 331.2 300.1	0.8 1.0 1.1 1.3 1.4 1.5 1.6 1.8 2.0 2.3 2.5 2.7 3.0	7377 6360 5746 4953 4532 4099 3844 3530 3126 2712 2496 2286 2071	0.8 1.0 1.0 1.3 1.4 1.5 1.3 1.7 2.1 1.8 2.6 2.8 3.0	8.0	5.6	90L/6C	- - - - - - - - - - - - -	- - - - - - - - - - - - -	115.0 115.0 115.0 115.0 115.0 97.8 97.8 97.8 97.8 97.8 97.8 89.1 89.1	138.0 138.0 138.0 138.0 138.0 117.3 117.3 117.3 117.3 117.3 117.3 107.0 107.0	86.3 86.3 86.3 86.3 86.3 73.3 73.3 73.3 73.3 73.3 73.3 66.8 66.8	-	127	108	130	143	392-403
	PLB 7004	1069.0 921.5 832.6 717.7 656.7 594.0 557.0 511.5 393.0	1.3 1.5 1.7 2.0 2.1 2.4 2.5 2.7 3.6	4743 4088 3694 3184 2913 2635 2471 2269 1744	1.1 1.5 1.4 1.8 2.0 2.1 1.9 2.4 2.5	8.0	5.6	80M/4D	- - - - - - - - -	- - - - - - - - -	115.0 97.8 97.8 97.8 97.8 97.8 97.8 89.1 89.1 83.4	138.0 117.3 117.3 117.3 117.3 117.3 117.3 107.0 107.0 100.1	86.3 73.3 73.3 73.3 73.3 73.3 73.3 66.8 66.8 62.5	-	121.5	102.5	124.5	137.5	392-403
	PLB 7004	1069.0 921.5 832.6	2.6 3.0 3.4	2371 2044 1847	2.0 2.7 2.4	8.0	5.6	80M/2B	- - -	- - -	89.1 89.1 89.1	107.0 107.0 107.0	66.8 66.8 66.8	-	120	101	123	136	392-403
	PLB 5004	735.5 665.3 551.9 509.1 475.3 449.4 422.4 350.0 320.6 290.4 265.9 240.9	1.2 1.4 1.6 1.8 1.9 2.0 2.1 2.6 2.8 3.1 3.4 3.7	5076 4591 3809 3513 3280 3101 2915 2415 2213 2004 1835 1663	0.9 0.8 0.9 1.0 1.2 1.5 1.2 1.9 2.3 2.2 2.6 2.6	6.0	4.2	90L/6C	35.0 35.0 29.8 29.8 29.8 29.8 29.8 27.1 27.1 27.1 27.1 25.4	45.0 45.0 38.3 38.3 38.3 38.3 38.3 34.9 34.9 34.9 34.9 32.6	63.0 63.0 53.6 53.6 53.6 53.6 53.6 48.8 48.8 48.8 48.8 45.7	73.0 73.0 62.1 62.1 62.1 62.1 62.1 56.6 56.6 56.6 56.6 52.9	47.3 47.3 40.2 40.2 40.2 40.2 40.2 36.6 36.6 36.6 36.6 34.3	91	100	82	93	104	370-385

P1 (kW)		iges	n2 (rpm)	M2 (Nm)	fs	Pt (20°C) (kW)	Pt (40°C) (kW)	Motor IE2	FR (kN)					~ Kg					mm
									MC	MS	PC	PS	CPC	M...	P...	F	FS	CPC	
0.75	PLB 5004	801.9	1.7	3558	1.0	6.0	4.2	80M/4D	29.8	38.3	53.6	62.1	40.2	85.5	94.5	76.5	87.5	98.5	370-385
		735.5	1.9	3263	1.2				29.8	38.3	53.6	62.1	40.2						
		665.3	2.1	2952	1.2				29.8	38.3	53.6	62.1	40.2						
		615.2	2.3	2729	1.0				29.8	38.3	53.6	62.1	40.2						
		551.9	2.5	2449	1.4				27.1	34.9	48.8	56.6	36.6						
		509.1	2.7	2259	1.5				27.1	34.9	48.8	56.6	36.6						
		475.3	2.9	2109	1.8				27.1	34.9	48.8	56.6	36.6						
		449.4	3.1	1994	2.3				27.1	34.9	48.8	56.6	36.6						
		422.4	3.3	1874	1.7				27.1	34.9	48.8	56.6	36.6						
		350.0	4.0	1553	2.8				25.4	32.6	45.7	52.9	34.3						
	PLB 5004	1244.1	2.3	2760	1.0	6.0	4.2	80M/2B	29.8	38.3	53.6	62.1	40.2	84	93	75	86	97	370-385
		801.9	3.5	1779	1.8				27.1	34.9	48.8	56.6	36.6						
		735.5	3.8	1632	2.1				25.4	32.6	45.7	52.9	34.3						
		665.3	4.2	1476	2.1				25.4	32.6	45.7	52.9	34.3						
		615.2	4.6	1365	1.7				23.6	30.4	42.5	49.3	31.9						
		551.9	5.1	1224	2.4				23.6	30.4	42.5	49.3	31.9						
		509.1	5.5	1129	2.6				23.6	30.4	42.5	49.3	31.9						
		422.4	6.6	937	3.0				20.1	25.9	36.2	42.0	27.2						
	PLB 2504	475.3	1.9	3280	0.8	4.0	2.8	90L/6C	29.8	38.3	53.6	62.1	40.2	85	94	76	87	98	348-363
		449.4	2.0	3101	1.1				29.8	38.3	53.6	62.1	40.2						
		422.4	2.1	2915	0.8				29.8	38.3	53.6	62.1	40.2						
		350.0	2.6	2415	1.3				27.1	34.9	48.8	56.6	36.6						
		320.6	2.8	2213	1.6				27.1	34.9	48.8	56.6	36.6						
		290.4	3.1	2004	1.5				27.1	34.9	48.8	56.6	36.6						
		265.9	3.4	1835	1.8				27.1	34.9	48.8	56.6	36.6						
		240.9	3.7	1663	1.8				25.4	32.6	45.7	52.9	34.3						
		220.6	4.1	1522	2.1				25.4	32.6	45.7	52.9	34.3						
		184.4	4.9	1273	2.2				23.6	30.4	42.5	49.3	31.9						
		168.9	5.3	1166	2.6				23.6	30.4	42.5	49.3	31.9						
	PLB 2504	735.5	1.9	3263	0.8	4.0	2.8	80M/4D	29.8	38.3	53.6	62.1	40.2	79.5	88.5	70.5	81.5	92.5	348-363
		665.3	2.1	2952	0.8				29.8	38.3	53.6	62.1	40.2						
		551.9	2.5	2449	0.9				27.1	34.9	48.8	56.6	36.6						
		509.1	2.7	2259	1.0				27.1	34.9	48.8	56.6	36.6						
		475.3	2.9	2109	1.2				27.1	34.9	48.8	56.6	36.6						
		449.4	3.1	1994	1.5				27.1	34.9	48.8	56.6	36.6						
		422.4	3.3	1874	1.1				27.1	34.9	48.8	56.6	36.6						
		350.0	4.0	1553	1.9				25.4	32.6	45.7	52.9	34.3						
		320.6	4.4	1422	2.2				25.4	32.6	45.7	52.9	34.3						
		290.4	4.8	1288	2.2				23.6	30.4	42.5	49.3	31.9						
		265.9	5.3	1180	2.6				23.6	30.4	42.5	49.3	31.9						
		240.9	5.8	1069	2.6				21.0	27.0	37.8	43.8	28.4						
	PLB 2504	801.9	3.5	1779	1.2	4.0	2.8	80M/2B	27.1	34.9	48.8	56.6	36.6	78	87	69	80	91	348-363
		735.5	3.8	1632	1.5				25.4	32.6	45.7	52.9	34.3						
		665.3	4.2	1476	1.4				25.4	32.6	45.7	52.9	34.3						
		615.2	4.6	1365	1.1				23.6	30.4	42.5	49.3	31.9						
		551.9	5.1	1224	1.6				23.6	30.4	42.5	49.3	31.9						
		509.1	5.5	1129	1.7				23.6	30.4	42.5	49.3	31.9						
		475.3	5.9	1054	2.2				21.0	27.0	37.8	43.8	28.4						
		449.4	6.2	997	2.7				21.0	27.0	37.8	43.8	28.4						
		422.4	6.6	937	2.0				20.1	25.9	36.2	42.0	27.2						
	PLB 1604	475.2	2.9	2108	0.8	1.5	1.1	80M/4D	8.5	10.5	18.6	23.3	14.0	62.5	64.5	60.5	63.5	67.5	326-340
		394.2	3.6	1749	0.9				8.0	9.8	17.4	21.8	13.1						
		363.7	3.8	1614	1.0				8.0	9.8	17.4	21.8	13.1						
		327.1	4.3	1451	1.1				8.0	9.8	17.4	21.8	13.1						
		301.7	4.6	1339	1.1				7.4	9.1	16.2	20.3	12.2						
		230.9	6.1	1024	1.4				6.6	8.1	14.4	18.0	10.8						
		207.7	6.7	921	1.5				6.3	7.8	13.8	17.3	10.4						
		191.6	7.3	850	1.7				6.3	7.8	13.8	17.3	10.4						
		158.9	8.8	705	1.9				5.8	7.1	12.6	15.8	9.5						
		131.8	10.6	585	2.3				5.5	6.8	12.0	15.0	9.0						
	PLB 1604	301.7	3.0	2082	0.8	1.5	1.1	90L/6C	8.5	10.5	18.6	23.3	14.0	68	70	66	69	73	326-340
		230.9	3.9	1594	1.0				8.0	9.8	17.4	21.8	13.1						
		207.7	4.3	1433	1.1				8.0	9.8	17.4	21.8	13.1						
		191.6	4.7	1322	1.1				7.4	9.1	16.2	20.3	12.2						
		158.9	5.7	1097	1.3				6.6	8.1	14.4	18.0	10.8						
		131.8	6.8	910	1.6				6.3	7.8	13.8	17.3	10.4						

P1 (kW)		iges	n2 (rpm)	M2 (Nm)	fs	Pt (20°C) (kW)	Pt (40°C) (kW)	Motor IE2	FR (kN)					~ Kg					mm
									MC	MS	PC	PS	CPC	M...	P...	F	FS	CPC	
0.75	PLB 1604	735.4	3.8	1631	1.0	1.5	1.1	80M/2B	8.0	9.8	17.4	21.8	13.1	61	63	59	62	66	326-340
		610.1	4.6	1353	1.1				7.4	9.1	16.2	20.3	12.2						
		572.8	4.9	1271	1.2				7.4	9.1	16.2	20.3	12.2						
		515.1	5.4	1143	0.9				7.4	9.1	16.2	20.3	12.2						
		475.2	5.9	1054	1.4				6.6	8.1	14.4	18.0	10.8						
		394.2	7.1	874	1.6				6.3	7.8	13.8	17.3	10.4						
		363.7	7.7	807	1.7				6.1	7.4	13.2	16.5	9.9						
		327.1	8.6	726	1.9				5.8	7.1	12.6	15.8	9.5						
		301.7	9.3	669	2.0				5.8	7.1	12.6	15.8	9.5						
		230.9	12.1	512	2.5				5.5	6.8	12.0	15.0	9.0						
		207.7	13.5	461	2.8				5.2	6.3	11.3	14.1	8.5						
		191.6	14.6	425	3.0				5.2	6.3	11.3	14.1	8.5						
	PLB 1004	572.8	4.9	1271	0.8	1.5	1.1	80M/2B	7.4	9.1	16.2	20.3	12.2	59	61	57	60	64	304-318
		475.2	5.9	1054	0.9				6.6	8.1	14.4	18.0	10.8						
		394.2	7.1	874	1.1				6.3	7.8	13.8	17.3	10.4						
		363.7	7.7	807	1.1				6.1	7.4	13.2	16.5	9.9						
		327.1	8.6	726	1.2				5.8	7.1	12.6	15.8	9.5						
		301.7	9.3	669	1.3				5.8	7.1	12.6	15.8	9.5						
		230.9	12.1	512	1.6				5.5	6.8	12.0	15.0	9.0						
		207.7	13.5	461	1.8				5.2	6.3	11.3	14.1	8.5						
		191.6	14.6	425	1.9				5.2	6.3	11.3	14.1	8.5						
		158.9	17.6	352	2.2				4.6	5.6	10.0	12.5	7.5						
		131.8	21.2	292	2.6				4.6	5.6	10.0	12.5	7.5						
	PLB 1004	158.9	5.7	1097	0.9	1.5	1.1	90L/6C	6.6	8.1	14.4	18.0	10.8	66	68	64	67	71	304-318
		131.8	6.8	910	1.0				6.3	7.8	13.8	17.3	10.4						
	PLB 1004	230.9	6.1	1024	0.9	1.5	1.1	80M/4D	6.6	8.1	14.4	18.0	10.8	60.5	62.5	58.5	61.5	65.5	304-318
		207.7	6.7	921	1.0				6.3	7.8	13.8	17.3	10.4						
		191.6	7.3	850	1.1				6.3	7.8	13.8	17.3	10.4						
		158.9	8.8	705	1.2				5.8	7.1	12.6	15.8	9.5						
		131.8	10.6	585	1.5				5.5	6.8	12.0	15.0	9.0						
	PLB 5003	143.5	6.3	1026	2.2	10.0	7.0	90L/6C	21.0	27.0	37.8	43.8	28.4	85	94	76	87	98	370-385
	PLB 2503	143.5	6.3	1026	1.4	8.0	5.6	90L/6C	21.0	27.0	37.8	43.8	28.4	79	88	71	81	92	348-363
		118.8	7.6	850	2.2				19.3	24.8	34.7	40.2	26.0						
		102.3	8.8	732	2.9				18.4	23.6	33.1	38.3	24.8						
		91.1	9.9	652	2.1				17.5	22.5	31.5	36.5	23.6						
	PLB 2503	143.5	9.8	660	2.1	8.0	5.6	80M/4D	17.5	22.5	31.5	36.5	23.6	73.5	82.5	65.5	75.5	86.5	348-363
		91.1	15.4	419	3.0				16.5	21.2	29.6	34.3	22.2						
	PLB 1603	133.6	6.7	955	0.9	5.0	3.5	90L/6C	6.3	7.8	13.8	17.3	10.4	62	64	60	63	67	326-340
		110.9	8.1	793	1.2				6.1	7.4	13.2	16.5	9.9						
		92.0	9.8	658	1.4				5.5	6.8	12.0	15.0	9.0						
		84.9	10.6	607	2.2				5.5	6.8	12.0	15.0	9.0						
		70.4	12.8	503	2.5				5.2	6.3	11.3	14.1	8.5						
		58.4	15.4	418	3.0				5.2	6.3	11.3	14.1	8.5						
	PLB 1603	171.6	8.2	789	1.0	5.0	3.5	80M/4D	6.1	7.4	13.2	16.5	9.9	56.5	58.5	54.5	57.5	61.5	326-340
		133.6	10.5	614	1.3				5.5	6.8	12.0	15.0	9.0						
		110.9	12.6	510	1.8				5.2	6.3	11.3	14.1	8.5						
		92.0	15.2	423	2.1				5.2	6.3	11.3	14.1	8.5						
	PLB 1603	171.6	16.3	394	1.8	5.0	3.5	80M/2B	5.2	6.3	11.3	14.1	8.5	55	57	53	56	60	326-340
		133.6	21.0	307	2.2				4.6	5.6	10.0	12.5	7.5						
	PLB 1003	110.9	8.1	793	0.8	5.0	3.5	90L/6C	6.1	7.4	13.2	16.5	9.9	60	62	58	61	65	304-318
		92.0	9.8	658	1.0				5.5	6.8	12.0	15.0	9.0						
		84.9	10.6	607	1.4				5.5	6.8	12.0	15.0	9.0						
		70.4	12.8	503	1.6				5.2	6.3	11.3	14.1	8.5						
		58.4	15.4	418	1.9				5.2	6.3	11.3	14.1	8.5						
		53.9	16.7	385	2.1				5.2	6.3	11.3	14.1	8.5						
		44.7	20.1	320	2.4				4.6	5.6	10.0	12.5	7.5						
		37.1	24.3	265	2.8				4.3	5.3	9.4	11.7	7.0						
	PLB 1003	133.6	10.5	614	0.9	5.0	3.5	80M/4D	5.5	6.8	12.0	15.0	9.0	54.5	56.5	52.5	55.5	59.5	304-318
		110.9	12.6	510	1.2				5.2	6.3	11.3	14.1	8.5						
		92.0	15.2	423	1.4				5.2	6.3	11.3	14.1	8.5						
		84.9	16.5	390	2.0				5.2	6.3	11.3	14.1	8.5						
		70.4	19.9	324	2.4				4.6	5.6	10.0	12.5	7.5						
		58.4	24.0	268	2.8				4.3	5.3	9.4	11.7	7.0						
		53.9	26.0	248	3.0				4.3	5.3	9.4	11.7	7.0						
	PLB 1003	171.6	16.3	394	1.3	5.0	3.5	80M/2B	5.2	6.3	11.3	14.1	8.5	53	55	51	54	58	304-318
		133.6	21.0	307	1.6				4.6	5.6	10.0	12.5	7.5						
		110.9	25.2	255	2.1				4.3	5.3	9.4	11.7	7.0						
		92.0	30.4	211	2.5				4.1	5.0	8.9	11.1	6.7						
	PLB 1002	19.8	45.5	147	2.9	8.0	5.6	90L/6C	3.6	4.4	7.8	9.8	5.9	54	56	52	55	59	304-318

P1 (kW)		iges	n2 (rpm)	M2 (Nm)	fs	Pt (20°C) (kW)	Pt (40°C) (kW)	Motor IE2	FR (kN)					~ Kg					mm
									MC	MS	PC	PS	CPC	M...	P...	F	FS	CPC	
1.10	PLB 50004	1598.6	0.6	16181	2.9	20.0	14.0	90L/6D	178.0	246.0	-	-	133.5	459.5	-	401.5	414.5	567.5	536-549
	PLB 30004	1385.5 951.2	0.6 0.9	14024 9628	2.2 2.9	17.0	11.9	90L/6D	90.0 90.0	137.0 137.0	- -	- -	67.5 67.5	321.5	-	280.5	288.5	384.5	496-509
	PLB 25004	1726.9 1430.9 1190.5 985.2	0.5 0.6 0.8 0.9	17480 14483 12050 9972	1.4 1.6 2.4 2.9	15.0	10.5	90L/6D	90.0 90.0 90.0 90.0	137.0 137.0 137.0 137.0	- - - -	- - - -	67.5 67.5 67.5 67.5	290.5	-	254.5	262.5	353.5	476-489
	PLB 25004	1726.9 1430.9	0.8 1.0	11237 9311	2.0 2.3	15.0	10.5	90L/4C	90.0 90.0	137.0 137.0	- -	- -	67.5 67.5	288.5	-	252.5	260.5	351.5	476-489
	PLB 18004	981.2 812.0 749.1 699.2 622.5 558.2	0.9 1.1 1.2 1.3 1.4 1.6	9932 8219 7582 7077 6301 5650	1.9 2.2 2.3 2.5 2.7 3.0	13.0	9.1	90L/6D	60.0 60.0 60.0 60.0 60.0 51.0	106.0 106.0 106.0 106.0 106.0 90.1	140.0 140.0 140.0 140.0 140.0 119.0	186.0 186.0 186.0 186.0 186.0 158.1	45.0 45.0 45.0 45.0 45.0 38.3	197.5	224.5	166.5	202.5	247.5	452-469
	PLB 18004	981.2	1.4	6385	2.7	13.0	9.1	90L/4C	60.0	106.0	140.0	186.0	45.0	195.5	222.5	164.5	200.5	245.5	452-469
	PLB 16004	969.0 803.9 665.3 551.9 510.4 457.4	0.9 1.1 1.4 1.6 1.8 2.0	9808 8137 6734 5586 5166 4630	1.3 1.9 2.2 2.6 2.8 3.0	11.0	7.7	90L/6D	60.0 60.0 60.0 51.0 51.0 51.0	106.0 106.0 106.0 90.1 90.1 90.1	140.0 140.0 140.0 119.0 119.0 119.0	186.0 186.0 186.0 158.1 158.1 158.1	45.0 45.0 45.0 38.3 38.3 38.3	172.5	199.5	141.5	177.5	222.5	428-445
	PLB 16004	969.0 803.9	1.4 1.7	6305 5231	1.8 2.8	11.0	7.7	90L/4C	60.0 51.0	106.0 90.1	140.0 119.0	186.0 158.1	45.0 38.3	170.5	197.5	139.5	175.5	220.5	428-445
	PLB 10004	969.0 803.9 665.3 551.9 510.4 457.4 418.9 379.5 350.0	0.9 1.1 1.4 1.6 1.8 2.0 2.1 2.4 2.6	9808 8137 6734 5586 5166 4630 4240 3841 3543	0.8 1.2 1.3 1.6 1.7 1.8 2.0 2.1 2.3	11.0	7.7	90L/6D	65.0 65.0 65.0 55.3 55.3 55.3 55.3 55.3 50.4	95.0 95.0 95.0 80.8 80.8 80.8 80.8 80.8 73.6	- - - - - - - - -	- - - - - - - - -	48.8 48.8 48.8 41.4 41.4 41.4 41.4 41.4 37.8	164.5	-	132.5	169.5	214.5	410-421
	PLB 10004	969.0 803.9 665.3 551.9 510.4 457.4 418.9 379.5	1.4 1.7 2.1 2.5 2.7 3.1 3.3 3.7	6305 5231 4329 3591 3321 2976 2726 2469	1.1 1.7 1.9 2.3 2.4 2.6 2.8 3.0	11.0	7.7	90L/4C	65.0 55.3 55.3 50.4 50.4 50.4 50.4 47.1	95.0 80.8 80.8 73.6 73.6 73.6 73.6 68.9	- - - - - - - -	- - - - - - - -	48.8 41.4 41.4 37.8 37.8 37.8 37.8 35.3	162.5	-	130.5	167.5	212.5	410-421
	PLB 10004	969.0 803.9	2.9 3.5	3153 2615	1.9 2.9	11.0	7.7	80M/2D	50.4 50.4	73.6 73.6	- -	- -	37.8 37.8	158	-	126	163	208	410-421
	PLB 7004	717.7 656.7 594.0 557.0 511.5 453.0 393.0 361.7 331.2 300.1 274.8 248.4 229.6 210.3	1.3 1.4 1.5 1.6 1.8 2.0 2.3 2.5 2.7 3.0 3.3 3.6 3.9 4.3	7265 6647 6012 5638 5177 4585 3978 3661 3352 3038 2782 2514 2324 2129	0.9 0.9 1.0 0.9 1.2 1.4 1.2 1.7 1.9 2.0 2.2 2.6 2.5 2.7	8.0	5.6	90L/6D	- - - - - - - - - - - - - -	- - - - - - - - - - - - - -	115.0 115.0 97.8 97.8 97.8 97.8 97.8 97.8 89.1 89.1 89.1 83.4 83.4 83.4	138.0 138.0 117.3 117.3 117.3 117.3 117.3 117.3 107.0 107.0 107.0 100.1 100.1 100.1	86.3 86.3 73.3 73.3 73.3 73.3 73.3 73.3 66.8 66.8 66.8 62.5 62.5 62.5	-	128.5	109.5	131.5	144.5	392-403
	PLB 7004	1069.0 921.5 832.6 717.7 656.7 594.0 557.0 511.5 453.0 393.0 361.7 331.2 300.1	1.3 1.5 1.7 2.0 2.1 2.4 2.5 2.7 3.1 3.6 3.9 4.2 4.7	6956 5996 5418 4670 4273 3865 3624 3328 2948 2557 2354 2155 1953	0.8 1.0 0.9 1.2 1.3 1.5 1.3 1.7 2.1 1.7 2.5 2.7 2.9	8.0	5.6	90L/4C	- - - - - - - - - - - - -	- - - - - - - - - - - - -	115.0 97.8 97.8 97.8 97.8 97.8 97.8 89.1 89.1 89.1 83.4 83.4 83.4 77.6	138.0 117.3 117.3 117.3 117.3 117.3 117.3 107.0 107.0 107.0 100.1 100.1 100.1 93.2	86.3 73.3 73.3 73.3 73.3 73.3 66.8 66.8 66.8 62.5 62.5 62.5 58.2	-	126.5	107.5	129.5	142.5	392-403

P1 (kW)		iges	n2 (rpm)	M2 (Nm)	fs	Pt (20°C) (kW)	Pt (40°C) (kW)	Motor IE2	FR (kN)					~ Kg					mm
									MC	MS	PC	PS	CPC	M...	P...	F	FS	CPC	
1.10	PLB 7004	1069.0	2.6	3478	1.4	8.0	5.6	80M/2D	-	-	89.1	107.0	66.8	-	122	103	125	138	392-403
		921.5	3.0	2998	1.8				-	-	89.1	107.0	66.8						
		832.6	3.4	2709	1.7				-	-	89.1	107.0	66.8						
		717.7	3.9	2335	2.2				-	-	83.4	100.1	62.5						
		656.7	4.3	2137	2.4				-	-	83.4	100.1	62.5						
		594.0	4.7	1933	2.6				-	-	77.6	93.2	58.2						
		557.0	5.0	1812	2.3				-	-	77.6	93.2	58.2						
		511.5	5.5	1664	2.9				-	-	77.6	93.2	58.2						
	PLB 5004	735.5	1.9	4786	0.8	6.0	4.2	90L/4C	29.8	38.3	53.6	62.1	40.2	90.5	99.5	81.5	92.5	103.5	370-385
		665.3	2.1	4329	0.8				29.8	38.3	53.6	62.1	40.2						
		551.9	2.5	3591	0.9				27.1	34.9	48.8	56.6	36.6						
		509.1	2.7	3313	1.0				27.1	34.9	48.8	56.6	36.6						
		475.3	2.9	3093	1.2				27.1	34.9	48.8	56.6	36.6						
		449.4	3.1	2924	1.5				27.1	34.9	48.8	56.6	36.6						
		422.4	3.3	2749	1.2				27.1	34.9	48.8	56.6	36.6						
		350.0	4.0	2277	1.9				25.4	32.6	45.7	52.9	34.3						
		320.6	4.4	2086	2.2				25.4	32.6	45.7	52.9	34.3						
		290.4	4.8	1890	2.2				23.6	30.4	42.5	49.3	31.9						
		265.9	5.3	1730	2.6				23.6	30.4	42.5	49.3	31.9						
		240.9	5.8	1568	2.6				21.0	27.0	37.8	43.8	28.4						
		220.6	6.3	1435	3.0				21.0	27.0	37.8	43.8	28.4						
	PLB 5004	475.3	1.9	4811	0.8	6.0	4.2	90L/6D	29.8	38.3	53.6	62.1	40.2	92.5	101.5	83.5	94.5	105.5	370-385
		449.4	2.0	4549	1.1				29.8	38.3	53.6	62.1	40.2						
		422.4	2.1	4275	0.8				29.8	38.3	53.6	62.1	40.2						
		350.0	2.6	3543	1.3				27.1	34.9	48.8	56.6	36.6						
		320.6	2.8	3245	1.5				27.1	34.9	48.8	56.6	36.6						
		290.4	3.1	2939	1.5				27.1	34.9	48.8	56.6	36.6						
		265.9	3.4	2691	1.8				27.1	34.9	48.8	56.6	36.6						
		240.9	3.7	2438	1.8				25.4	32.6	45.7	52.9	34.3						
		220.6	4.1	2233	2.1				25.4	32.6	45.7	52.9	34.3						
		184.4	4.9	1866	2.2				23.6	30.4	42.5	49.3	31.9						
		168.9	5.3	1710	2.6				23.6	30.4	42.5	49.3	31.9						
		140.1	6.4	1418	3.0				21.0	27.0	37.8	43.8	28.4						
	PLB 5004	801.9	3.5	2609	1.2	6.0	4.2	80M/2D	27.1	34.9	48.8	56.6	36.6	86	95	77	88	99	370-385
		735.5	3.8	2393	1.5				25.4	32.6	45.7	52.9	34.3						
		665.3	4.2	2165	1.4				25.4	32.6	45.7	52.9	34.3						
		615.2	4.6	2002	1.2				23.6	30.4	42.5	49.3	31.9						
		551.9	5.1	1796	1.6				23.6	30.4	42.5	49.3	31.9						
		509.1	5.5	1656	1.7				23.6	30.4	42.5	49.3	31.9						
		475.3	5.9	1546	2.1				21.0	27.0	37.8	43.8	28.4						
		449.4	6.2	1462	2.7				21.0	27.0	37.8	43.8	28.4						
		422.4	6.6	1374	2.0				20.1	25.9	36.2	42.0	27.2						
	PLB 2504	350.0	2.6	3543	0.9	4.0	2.8	90L/6D	27.1	34.9	48.8	56.6	36.6	86.5	95.5	77.5	88.5	99.5	348-363
		320.6	2.8	3245	1.1				27.1	34.9	48.8	56.6	36.6						
		290.4	3.1	2939	1.0				27.1	34.9	48.8	56.6	36.6						
		265.9	3.4	2691	1.2				27.1	34.9	48.8	56.6	36.6						
		240.9	3.7	2438	1.2				25.4	32.6	45.7	52.9	34.3						
		220.6	4.1	2233	1.4				25.4	32.6	45.7	52.9	34.3						
		184.4	4.9	1866	1.5				23.6	30.4	42.5	49.3	31.9						
		168.9	5.3	1710	1.8				23.6	30.4	42.5	49.3	31.9						
		140.1	6.4	1418	2.1				21.0	27.0	37.8	43.8	28.4						
	PLB 2504	475.3	2.9	3093	0.8	4.0	2.8	90L/4C	27.1	34.9	48.8	56.6	36.6	84.5	93.5	75.5	86.5	97.5	348-363
		449.4	3.1	2924	1.1				27.1	34.9	48.8	56.6	36.6						
		422.4	3.3	2749	0.8				27.1	34.9	48.8	56.6	36.6						
		350.0	4.0	2277	1.3				25.4	32.6	45.7	52.9	34.3						
		320.6	4.4	2086	1.5				25.4	32.6	45.7	52.9	34.3						
		290.4	4.8	1890	1.5				23.6	30.4	42.5	49.3	31.9						
		265.9	5.3	1730	1.8				23.6	30.4	42.5	49.3	31.9						
		240.9	5.8	1568	1.8				21.0	27.0	37.8	43.8	28.4						
		220.6	6.3	1435	2.1				21.0	27.0	37.8	43.8	28.4						
		184.4	7.6	1200	2.2				19.3	24.8	34.7	40.2	26.0						
		168.9	8.3	1099	2.6				19.3	24.8	34.7	40.2	26.0						
	PLB 2504	801.9	3.5	2609	0.8	4.0	2.8	80M/2D	27.1	34.9	48.8	56.6	36.6	80	89	71	82	93	348-363
		735.5	3.8	2393	1.0				25.4	32.6	45.7	52.9	34.3						
		665.3	4.2	2165	0.9				25.4	32.6	45.7	52.9	34.3						
		615.2	4.6	2002	0.8				23.6	30.4	42.5	49.3	31.9						
		551.9	5.1	1796	1.1				23.6	30.4	42.5	49.3	31.9						
		509.1	5.5	1656	1.2				23.6	30.4	42.5	49.3	31.9						
		475.3	5.9	1546	1.5				21.0	27.0	37.8	43.8	28.4						
		449.4	6.2	1462	1.9				21.0	27.0	37.8	43.8	28.4						
		422.4	6.6	1374	1.4				20.1	25.9	36.2	42.0	27.2						
		350.0	8.0	1139	2.3				19.3	24.8	34.7	40.2	26.0						
		320.6	8.7	1043	2.7				18.4	23.6	33.1	38.3	24.8						
		290.4	9.6	945	2.7				17.5	22.5	31.5	36.5	23.6						

P1 (kW)		iges	n2 (rpm)	M2 (Nm)	fs	Pt (20°C) (kW)	Pt (40°C) (kW)	Motor IE2	FR (kN)					~ Kg					mm
									MC	MS	PC	PS	CPC	M...	P...	F	FS	CPC	
1.10	PLB 1604	301.7	4.6	1963	0.8	1.5	1.1	90L/4C	7.4	9.1	16.2	20.3	12.2	67.5	69.5	65.5	68.5	72.5	326-340
		230.9	6.1	1502	1.0				6.6	8.1	14.4	18.0	10.8						
		207.7	6.7	1351	1.1				6.3	7.8	13.8	17.3	10.4						
		191.6	7.3	1247	1.1				6.3	7.8	13.8	17.3	10.4						
		158.9	8.8	1034	1.3				5.8	7.1	12.6	15.8	9.5						
		131.8	10.6	858	1.6				5.5	6.8	12.0	15.0	9.0						
	PLB 1604	610.1	4.6	1985	0.8	1.5	1.1	80M/2D	7.4	9.1	16.2	20.3	12.2	63	65	61	64	68	326-340
		572.8	4.9	1864	0.8				7.4	9.1	16.2	20.3	12.2						
		475.2	5.9	1546	0.9				6.6	8.1	14.4	18.0	10.8						
		394.2	7.1	1283	1.1				6.3	7.8	13.8	17.3	10.4						
		363.7	7.7	1183	1.2				6.1	7.4	13.2	16.5	9.9						
		327.1	8.6	1064	1.3				5.8	7.1	12.6	15.8	9.5						
		301.7	9.3	982	1.4				5.8	7.1	12.6	15.8	9.5						
		230.9	12.1	751	1.7				5.5	6.8	12.0	15.0	9.0						
		207.7	13.5	676	1.9				5.2	6.3	11.3	14.1	8.5						
		191.6	14.6	623	2.0				5.2	6.3	11.3	14.1	8.5						
		158.9	17.6	517	2.3				4.6	5.6	10.0	12.5	7.5						
		131.8	21.2	429	2.7				4.6	5.6	10.0	12.5	7.5						
	PLB 1604	191.6	4.7	1939	0.8	1.5	1.1	90L/6D	7.4	9.1	16.2	20.3	12.2	69.5	71.5	67.5	70.5	74.5	326-340
		158.9	5.7	1608	0.9				6.6	8.1	14.4	18.0	10.8						
		131.8	6.8	1334	1.1				6.3	7.8	13.8	17.3	10.4						
	PLB 1004	363.7	7.7	1183	0.8	1.5	1.1	80M/2D	6.1	7.4	13.2	16.5	9.9	61	63	59	62	66	304-318
		327.1	8.6	1064	0.8				5.8	7.1	12.6	15.8	9.5						
		301.7	9.3	982	0.9				5.8	7.1	12.6	15.8	9.5						
		230.9	12.1	751	1.1				5.5	6.8	12.0	15.0	9.0						
		207.7	13.5	676	1.2				5.2	6.3	11.3	14.1	8.5						
		191.6	14.6	623	1.3				5.2	6.3	11.3	14.1	8.5						
		158.9	17.6	517	1.5				4.6	5.6	10.0	12.5	7.5						
		131.8	21.2	429	1.8				4.6	5.6	10.0	12.5	7.5						
	PLB 1004	158.9	8.8	1034	0.9	1.5	1.1	90L/4C	5.8	7.1	12.6	15.8	9.5	65.5	67.5	63.5	66.5	70.5	304-318
		131.8	10.6	858	1.0				5.5	6.8	12.0	15.0	9.0						
	PLB 10003	266.4	3.4	2794	2.1	15.0	10.5	90L/6D	50.4	73.6	-	-	37.8	181.5	-	149.5	186.5	231.5	410-421
	PLB 10003	266.4	5.3	1796	3.0	15.0	10.5	90L/4C	43.9	64.1	-	-	32.9	179.5	-	147.5	184.5	229.5	410-421
	PLB 7003	148.9	6.0	1562	2.1	14.0	9.8	90L/6D	-	-	69.0	82.8	51.8	-	121.5	103.5	124.5	138.5	392-403
	PLB 5003	143.5	6.3	1505	1.5	10.0	7.0	90L/6D	21.0	27.0	37.8	43.8	28.4	86.5	95.5	77.5	88.5	99.5	370-385
		118.8	7.6	1246	2.2				19.3	24.8	34.7	40.2	26.0						
		102.3	8.8	1073	2.8				18.4	23.6	33.1	38.3	24.8						
		91.1	9.9	956	2.2				17.5	22.5	31.5	36.5	23.6						
	PLB 5003	143.5	9.8	968	2.1	10.0	7.0	90L/4C	17.5	22.5	31.5	36.5	23.6	84.5	93.5	75.5	86.5	97.5	370-385
	PLB 2503	143.5	6.3	1505	1.0	8.0	5.6	90L/6D	21.0	27.0	37.8	43.8	28.4	80.5	89.5	72.5	82.5	93.5	348-363
		118.8	7.6	1246	1.5				19.3	24.8	34.7	40.2	26.0						
		102.3	8.8	1073	2.0				18.4	23.6	33.1	38.3	24.8						
		91.1	9.9	956	1.4				17.5	22.5	31.5	36.5	23.6						
		84.9	10.6	891	2.3				17.5	22.5	31.5	36.5	23.6						
		75.4	11.9	791	2.2				17.5	22.5	31.5	36.5	23.6						
	PLB 2503	143.5	9.8	968	1.4	8.0	5.6	90L/4C	17.5	22.5	31.5	36.5	23.6	78.5	87.5	70.5	80.5	91.5	348-363
		118.8	11.8	801	2.1				17.5	22.5	31.5	36.5	23.6						
		102.3	13.7	690	2.9				16.5	21.2	29.6	34.3	22.2						
		91.1	15.4	614	2.1				16.5	21.2	29.6	34.3	22.2						
	PLB 2503	143.5	19.5	484	2.5	8.0	5.6	80M/2D	14.5	18.7	26.1	30.3	19.6	74	83	66	76	87	348-363
	PLB 1603	110.9	8.1	1163	0.8	5.0	3.5	90L/6D	6.1	7.4	13.2	16.5	9.9	63.5	65.5	61.5	64.5	68.5	326-340
		92.0	9.8	965	1.0				5.5	6.8	12.0	15.0	9.0						
		84.9	10.6	891	1.5				5.5	6.8	12.0	15.0	9.0						
		70.4	12.8	738	1.7				5.2	6.3	11.3	14.1	8.5						
		58.4	15.4	613	2.0				5.2	6.3	11.3	14.1	8.5						
		53.9	16.7	565	2.2				5.2	6.3	11.3	14.1	8.5						
		44.7	20.1	469	2.5				4.6	5.6	10.0	12.5	7.5						
		37.1	24.3	389	2.9				4.3	5.3	9.4	11.7	7.0						
	PLB 1603	133.6	10.5	901	0.9	5.0	3.5	90L/4C	5.5	6.8	12.0	15.0	9.0	61.5	63.5	59.5	62.5	66.5	326-340
		110.9	12.6	748	1.2				5.2	6.3	11.3	14.1	8.5						
		92.0	15.2	620	1.4				5.2	6.3	11.3	14.1	8.5						
		84.9	16.5	572	2.1				5.2	6.3	11.3	14.1	8.5						
		70.4	19.9	475	2.5				4.6	5.6	10.0	12.5	7.5						
		58.4	24.0	394	2.9				4.3	5.3	9.4	11.7	7.0						
	PLB 1603	171.6	16.3	579	1.3	5.0	3.5	80M/2D	5.2	6.3	11.3	14.1	8.5	57	59	55	58	62	326-340
		133.6	21.0	450	1.5				4.6	5.6	10.0	12.5	7.5						
		110.9	25.2	374	2.2				4.3	5.3	9.4	11.7	7.0						
		92.0	30.4	310	2.5				4.1	5.0	8.9	11.1	6.7						

P1 (kW)	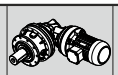	iges	n2 (rpm)	M2 (Nm)	fs	Pt (20°C) (kW)	Pt (40°C) (kW)	Motor IE2	FR (kN)					~ Kg					mm
									MC	MS	PC	PS	CPC	M...	P...	F	FS	CPC	
1.10	PLB 1003	84.9	10.6	891	1.0	5.0	3.5	90L/6D	5.5	6.8	12.0	15.0	9.0	61.5	63.5	59.5	62.5	66.5	304-318
		70.4	12.8	738	1.1				5.2	6.3	11.3	14.1	8.5						
		58.4	15.4	613	1.3				5.2	6.3	11.3	14.1	8.5						
		53.9	16.7	565	1.4				5.2	6.3	11.3	14.1	8.5						
		44.7	20.1	469	1.6				4.6	5.6	10.0	12.5	7.5						
		37.1	24.3	389	1.9				4.3	5.3	9.4	11.7	7.0						
	PLB 1003	110.9	12.6	748	0.8	5.0	3.5	90L/4C	5.2	6.3	11.3	14.1	8.5	59.5	61.5	57.5	60.5	64.5	304-318
		92.0	15.2	620	1.0				5.2	6.3	11.3	14.1	8.5						
		84.9	16.5	572	1.4				5.2	6.3	11.3	14.1	8.5						
		70.4	19.9	475	1.6				4.6	5.6	10.0	12.5	7.5						
		58.4	24.0	394	1.9				4.3	5.3	9.4	11.7	7.0						
		53.9	26.0	363	2.0				4.3	5.3	9.4	11.7	7.0						
		44.7	31.3	301	2.4				4.1	5.0	8.9	11.1	6.7						
		37.1	37.7	250	2.8				3.7	4.5	8.0	10.1	6.0						
	PLB 1003	171.6	16.3	579	0.9	5.0	3.5	80M/2D	5.2	6.3	11.3	14.1	8.5	55	57	53	56	60	304-318
		133.6	21.0	450	1.1				4.6	5.6	10.0	12.5	7.5						
		110.9	25.2	374	1.4				4.3	5.3	9.4	11.7	7.0						
		92.0	30.4	310	1.7				4.1	5.0	8.9	11.1	6.7						
		84.9	33.0	286	2.5				3.9	4.7	8.4	10.5	6.3						
		70.4	39.8	237	2.9				3.7	4.5	8.0	10.1	6.0						
	PLB 1602	19.8	45.5	215	2.8	8.0	5.6	90L/6D	3.6	4.4	7.8	9.8	5.9	57.5	59.5	55.5	58.5	62.5	326-340
	PLB 1002	19.8	45.5	215	2.0	8.0	5.6	90L/6D	3.6	4.4	7.8	9.8	5.9	55.5	57.5	53.5	56.5	60.5	304-318
		16.4	54.9	178	2.6				3.4	4.2	7.4	9.3	5.6						
	PLB 1002	19.8	70.7	138	2.8	8.0	5.6	90L/4C	3.1	3.8	6.8	8.6	5.1	53.5	55.5	51.5	54.5	58.5	304-318
1.50	PLB 50004	1598.6	0.6	22065	2.1	20.0	14.0	100L/6D	178.0	246.0	-	-	133.5	467	-	409	422	575	536-549
		1348.8	0.7	18617	3.0				178.0	246.0	-	-	133.5						
	PLB 50004	1598.6	0.9	14185	3.0	20.0	14.0	90L/4D	178.0	246.0	-	-	133.5	458	-	400	413	566	536-549
	PLB 35004	1253.8	0.7	17306	2.3	17.0	11.9	100L/6D	144.0	204.0	-	-	108.0	335	-	299	307	398	516-529
		1037.7	0.9	14323	2.7				144.0	204.0	-	-	108.0						
	PLB 30004	1385.5	0.6	19124	1.6	17.0	11.9	100L/6D	90.0	137.0	-	-	67.5	329	-	288	296	392	496-509
		951.2	0.9	13129	2.2				90.0	137.0	-	-	67.5						
		819.1	1.1	11306	2.4				90.0	137.0	-	-	67.5						
		729.3	1.2	10066	2.7				90.0	137.0	-	-	67.5						
	PLB 30004	1385.5	1.0	12294	2.3	17.0	11.9	90L/4D	90.0	137.0	-	-	67.5	320	-	279	287	383	496-509
	PLB 25004	1726.9	0.5	23836	1.0	15.0	10.5	100L/6D	90.0	137.0	-	-	67.5	298	-	262	270	361	476-489
		1430.9	0.6	19750	1.2				90.0	137.0	-	-	67.5						
		1190.5	0.8	16432	1.8				90.0	137.0	-	-	67.5						
		985.2	0.9	13598	2.1				90.0	137.0	-	-	67.5						
		731.4	1.2	10095	2.7				90.0	137.0	-	-	67.5						
		651.2	1.4	8988	2.9				90.0	137.0	-	-	67.5						
	PLB 25004	1726.9	0.8	15323	1.5	15.0	10.5	90L/4D	90.0	137.0	-	-	67.5	289	-	253	261	352	476-489
		1430.9	1.0	12697	1.7				90.0	137.0	-	-	67.5						
		1190.5	1.2	10563	2.5				90.0	137.0	-	-	67.5						
		985.2	1.4	8742	3.0				90.0	137.0	-	-	67.5						
	PLB 25004	1726.9	1.6	7661	2.6	15.0	10.5	90L/2C	76.5	116.5	-	-	57.4	288.5	-	252.5	260.5	351.5	476-489
		1430.9	2.0	6348	3.0				76.5	116.5	-	-	57.4						
	PLB 18004	981.2	0.9	13543	1.4	13.0	9.1	100L/6D	60.0	106.0	140.0	186.0	45.0	205	232	174	210	255	452-469
		812.0	1.1	11208	1.6				60.0	106.0	140.0	186.0	45.0						
		749.1	1.2	10340	1.7				60.0	106.0	140.0	186.0	45.0						
		699.2	1.3	9651	1.8				60.0	106.0	140.0	186.0	45.0						
		622.5	1.4	8592	2.0				60.0	106.0	140.0	186.0	45.0						
		580.7	1.5	8015	2.4				51.0	90.1	119.0	158.1	38.3						
		558.2	1.6	7705	2.2				51.0	90.1	119.0	158.1	38.3						
		500.1	1.8	6903	2.7				51.0	90.1	119.0	158.1	38.3						
		442.9	2.0	6113	3.0				51.0	90.1	119.0	158.1	38.3						
	PLB 18004	981.2	1.4	8706	2.0	13.0	9.1	90L/4D	60.0	106.0	140.0	186.0	45.0	196	223	165	201	246	452-469
		812.0	1.7	7205	2.3				51.0	90.1	119.0	158.1	38.3						
		749.1	1.9	6647	2.5				51.0	90.1	119.0	158.1	38.3						
		699.2	2.0	6204	2.6				51.0	90.1	119.0	158.1	38.3						
		622.5	2.2	5524	2.9				51.0	90.1	119.0	158.1	38.3						
	PLB 16004	969.0	0.9	13375	0.9	11.0	7.7	100L/6D	60.0	106.0	140.0	186.0	45.0	180	207	149	185	230	428-445
		803.9	1.1	11096	1.4				60.0	106.0	140.0	186.0	45.0						
		665.3	1.4	9183	1.6				60.0	106.0	140.0	186.0	45.0						
		551.9	1.6	7618	1.9				51.0	90.1	119.0	158.1	38.3						
		510.4	1.8	7045	2.0				51.0	90.1	119.0	158.1	38.3						
		457.4	2.0	6313	2.2				51.0	90.1	119.0	158.1	38.3						
		418.9	2.1	5782	2.4				51.0	90.1	119.0	158.1	38.3						
		379.5	2.4	5238	2.6				51.0	90.1	119.0	158.1	38.3						
		347.5	2.6	4796	2.8				46.5	82.2	108.5	144.2	34.9						

P1 (kW)		iges	n2 (rpm)	M2 (Nm)	fs	Pt (20°C) (kW)	Pt (40°C) (kW)	Motor IE2	FR (kN)					~ Kg					mm
									MC	MS	PC	PS	CPC	M...	P...	F	FS	CPC	
1.50	PLB 16004	969.0	1.4	8598	1.3	11.0	7.7	90L/4D	60.0	106.0	140.0	186.0	45.0	171	198	140	176	221	428-445
		803.9	1.7	7133	2.0				51.0	90.1	119.0	158.1	38.3						
		665.3	2.1	5903	2.4				51.0	90.1	119.0	158.1	38.3						
		551.9	2.5	4897	2.8				46.5	82.2	108.5	144.2	34.9						
		510.4	2.7	4529	2.9				46.5	82.2	108.5	144.2	34.9						
	PLB 16004	969.0	2.9	4299	2.3	11.0	7.7	90L/2C	46.5	82.2	108.5	144.2	34.9	170.5	197.5	139.5	175.5	220.5	428-445
	PLB 10004	803.9	1.1	11096	0.8	11.0	7.7	100L/6D	65.0	95.0	-	-	48.8	172	-	140	177	222	410-421
		665.3	1.4	9183	1.0				65.0	95.0	-	-	48.8						
		551.9	1.6	7618	1.2				55.3	80.8	-	-	41.4						
		510.4	1.8	7045	1.2				55.3	80.8	-	-	41.4						
		457.4	2.0	6313	1.3				55.3	80.8	-	-	41.4						
		418.9	2.1	5782	1.4				55.3	80.8	-	-	41.4						
		379.5	2.4	5238	1.6				55.3	80.8	-	-	41.4						
		350.0	2.6	4831	1.7				50.4	73.6	-	-	37.8						
		320.6	2.8	4425	2.3				50.4	73.6	-	-	37.8						
		301.8	3.0	4166	2.4				50.4	73.6	-	-	37.8						
		278.4	3.2	3843	3.0				50.4	73.6	-	-	37.8						
		265.9	3.4	3670	2.7				50.4	73.6	-	-	37.8						
	PLB 10004	969.0	1.4	8598	0.8	11.0	7.7	90L/4D	65.0	95.0	-	-	48.8	163	-	131	168	213	410-421
		803.9	1.7	7133	1.2				55.3	80.8	-	-	41.4						
		665.3	2.1	5903	1.4				55.3	80.8	-	-	41.4						
		551.9	2.5	4897	1.7				50.4	73.6	-	-	37.8						
		510.4	2.7	4529	1.8				50.4	73.6	-	-	37.8						
		457.4	3.1	4059	1.9				50.4	73.6	-	-	37.8						
		418.9	3.3	3717	2.1				50.4	73.6	-	-	37.8						
		379.5	3.7	3367	2.2				47.1	68.9	-	-	35.3						
		350.0	4.0	3106	2.4				47.1	68.9	-	-	35.3						
	PLB 10004	969.0	2.9	4299	1.4	11.0	7.7	90L/2C	50.4	73.6	-	-	37.8	162.5	-	130.5	167.5	212.5	410-421
		803.9	3.5	3567	2.1				50.4	73.6	-	-	37.8						
		665.3	4.2	2952	2.5				47.1	68.9	-	-	35.3						
		551.9	5.1	2449	2.9				43.9	64.1	-	-	32.9						
	PLB 7004	921.5	1.5	8177	0.8	8.0	5.6	90L/4D	-	-	97.8	117.3	73.3	-	127	108	130	143	392-403
		717.7	2.0	6368	0.9				-	-	97.8	117.3	73.3						
		656.7	2.1	5827	1.0				-	-	97.8	117.3	73.3						
		594.0	2.4	5271	1.1				-	-	97.8	117.3	73.3						
		557.0	2.5	4942	1.0				-	-	89.1	107.0	66.8						
		511.5	2.7	4539	1.2				-	-	89.1	107.0	66.8						
		453.0	3.1	4020	1.5				-	-	89.1	107.0	66.8						
		393.0	3.6	3487	1.3				-	-	83.4	100.1	62.5						
		361.7	3.9	3209	1.8				-	-	83.4	100.1	62.5						
		331.2	4.2	2939	2.0				-	-	83.4	100.1	62.5						
		300.1	4.7	2663	2.1				-	-	77.6	93.2	58.2						
		274.8	5.1	2438	2.3				-	-	77.6	93.2	58.2						
		248.4	5.6	2204	2.7				-	-	69.0	82.8	51.8						
		229.6	6.1	2037	2.7				-	-	69.0	82.8	51.8						
		210.3	6.7	1866	2.9				-	-	66.1	79.4	49.6						
	PLB 7004	511.5	1.8	7060	0.8	8.0	5.6	100L/6D	-	-	97.8	117.3	73.3	-	136	117	139	152	392-403
		453.0	2.0	6253	1.1				-	-	97.8	117.3	73.3						
		393.0	2.3	5424	0.9				-	-	97.8	117.3	73.3						
		361.7	2.5	4992	1.3				-	-	97.8	117.3	73.3						
		331.2	2.7	4571	1.4				-	-	89.1	107.0	66.8						
		300.1	3.0	4142	1.5				-	-	89.1	107.0	66.8						
		274.8	3.3	3793	1.6				-	-	89.1	107.0	66.8						
		248.4	3.6	3429	1.9				-	-	83.4	100.1	62.5						
		229.6	3.9	3169	1.9				-	-	83.4	100.1	62.5						
		210.3	4.3	2903	2.0				-	-	83.4	100.1	62.5						
		190.1	4.7	2624	2.4				-	-	77.6	93.2	58.2						
		174.1	5.2	2403	2.5				-	-	77.6	93.2	58.2						
		157.7	5.7	2177	2.8				-	-	69.0	82.8	51.8						
	PLB 7004	1069.0	2.6	4743	1.0	8.0	5.6	90L/2C	-	-	89.1	107.0	66.8	-	126.5	107.5	129.5	142.5	392-403
		921.5	3.0	4088	1.3				-	-	89.1	107.0	66.8						
		832.6	3.4	3694	1.2				-	-	89.1	107.0	66.8						
		717.7	3.9	3184	1.6				-	-	83.4	100.1	62.5						
		656.7	4.3	2913	1.7				-	-	83.4	100.1	62.5						
		594.0	4.7	2635	1.9				-	-	77.6	93.2	58.2						
		557.0	5.0	2471	1.7				-	-	77.6	93.2	58.2						
		511.5	5.5	2269	2.2				-	-	77.6	93.2	58.2						
		453.0	6.2	2010	2.7				-	-	69.0	82.8	51.8						
		393.0	7.1	1744	2.3				-	-	66.1	79.4	49.6						

P1 (kW)		iges	n2 (rpm)	M2 (Nm)	fs	Pt (20°C) (kW)	Pt (40°C) (kW)	Motor IE2	FR (kN)					~ Kg					mm
									MC	MS	PC	PS	CPC	M...	P...	F	FS	CPC	
1.50	PLB 5004	449.4	2.0	6203	0.8	6.0	4.2	100L/6D	29.8	38.3	53.6	62.1	40.2	100	109	91	102	113	370-385
		350.0	2.6	4831	1.0				27.1	34.9	48.8	56.6	36.6						
		320.6	2.8	4425	1.1				27.1	34.9	48.8	56.6	36.6						
		290.4	3.1	4008	1.1				27.1	34.9	48.8	56.6	36.6						
		265.9	3.4	3670	1.3				27.1	34.9	48.8	56.6	36.6						
		240.9	3.7	3325	1.3				25.4	32.6	45.7	52.9	34.3						
		220.6	4.1	3045	1.5				25.4	32.6	45.7	52.9	34.3						
		184.4	4.9	2545	1.6				23.6	30.4	42.5	49.3	31.9						
		168.9	5.3	2331	1.9				23.6	30.4	42.5	49.3	31.9						
		140.1	6.4	1934	2.2				21.0	27.0	37.8	43.8	28.4						
	PLB 5004	475.3	2.9	4217	0.9	6.0	4.2	90L/4D	27.1	34.9	48.8	56.6	36.6	91	100	82	93	104	370-385
		449.4	3.1	3988	1.1				27.1	34.9	48.8	56.6	36.6						
		422.4	3.3	3748	0.8				27.1	34.9	48.8	56.6	36.6						
		350.0	4.0	3106	1.4				25.4	32.6	45.7	52.9	34.3						
		320.6	4.4	2845	1.6				25.4	32.6	45.7	52.9	34.3						
		290.4	4.8	2577	1.6				23.6	30.4	42.5	49.3	31.9						
		265.9	5.3	2359	1.9				23.6	30.4	42.5	49.3	31.9						
		240.9	5.8	2138	1.9				21.0	27.0	37.8	43.8	28.4						
		220.6	6.3	1957	2.2				21.0	27.0	37.8	43.8	28.4						
		184.4	7.6	1636	2.4				19.3	24.8	34.7	40.2	26.0						
		168.9	8.3	1499	2.8				19.3	24.8	34.7	40.2	26.0						
	PLB 5004	801.9	3.5	3558	0.9	6.0	4.2	90L/2C	27.1	34.9	48.8	56.6	36.6	90.5	99.5	81.5	92.5	103.5	370-385
		735.5	3.8	3263	1.1				25.4	32.6	45.7	52.9	34.3						
		665.3	4.2	2952	1.0				25.4	32.6	45.7	52.9	34.3						
		615.2	4.6	2729	0.9				23.6	30.4	42.5	49.3	31.9						
		551.9	5.1	2449	1.2				23.6	30.4	42.5	49.3	31.9						
		509.1	5.5	2259	1.3				23.6	30.4	42.5	49.3	31.9						
		475.3	5.9	2109	1.5				21.0	27.0	37.8	43.8	28.4						
		449.4	6.2	1994	2.0				21.0	27.0	37.8	43.8	28.4						
		422.4	6.6	1874	1.5				20.1	25.9	36.2	42.0	27.2						
		350.0	8.0	1553	2.4				19.3	24.8	34.7	40.2	26.0						
		320.6	8.7	1422	2.9				18.4	23.6	33.1	38.3	24.8						
		290.4	9.6	1288	2.9				17.5	22.5	31.5	36.5	23.6						
	PLB 2504	320.6	2.8	4425	0.8	4.0	2.8	100L/6D	27.1	34.9	48.8	56.6	36.6	94	103	85	96	107	348-363
		290.4	3.1	4008	0.8				27.1	34.9	48.8	56.6	36.6						
		265.9	3.4	3670	0.9				27.1	34.9	48.8	56.6	36.6						
		240.9	3.7	3325	0.9				25.4	32.6	45.7	52.9	34.3						
		220.6	4.1	3045	1.1				25.4	32.6	45.7	52.9	34.3						
		184.4	4.9	2545	1.1				23.6	30.4	42.5	49.3	31.9						
		168.9	5.3	2331	1.3				23.6	30.4	42.5	49.3	31.9						
		140.1	6.4	1934	1.5				21.0	27.0	37.8	43.8	28.4						
	PLB 2504	449.4	3.1	3988	0.8	4.0	2.8	90L/4D	27.1	34.9	48.8	56.6	36.6	85	94	76	87	98	348-363
		350.0	4.0	3106	0.9				25.4	32.6	45.7	52.9	34.3						
		320.6	4.4	2845	1.1				25.4	32.6	45.7	52.9	34.3						
		290.4	4.8	2577	1.1				23.6	30.4	42.5	49.3	31.9						
		265.9	5.3	2359	1.3				23.6	30.4	42.5	49.3	31.9						
		240.9	5.8	2138	1.3				21.0	27.0	37.8	43.8	28.4						
		220.6	6.3	1957	1.5				21.0	27.0	37.8	43.8	28.4						
		184.4	7.6	1636	1.6				19.3	24.8	34.7	40.2	26.0						
		168.9	8.3	1499	1.9				19.3	24.8	34.7	40.2	26.0						
		140.1	10.0	1243	2.2				17.5	22.5	31.5	36.5	23.6						
	PLB 2504	551.9	5.1	2449	0.8	4.0	2.8	90L/2C	23.6	30.4	42.5	49.3	31.9	84.5	93.5	75.5	86.5	97.5	348-363
		509.1	5.5	2259	0.9				23.6	30.4	42.5	49.3	31.9						
		475.3	5.9	2109	1.1				21.0	27.0	37.8	43.8	28.4						
		449.4	6.2	1994	1.4				21.0	27.0	37.8	43.8	28.4						
		422.4	6.6	1874	1.0				20.1	25.9	36.2	42.0	27.2						
		350.0	8.0	1553	1.7				19.3	24.8	34.7	40.2	26.0						
		320.6	8.7	1422	2.0				18.4	23.6	33.1	38.3	24.8						
		290.4	9.6	1288	2.0				17.5	22.5	31.5	36.5	23.6						
		265.9	10.5	1180	2.3				17.5	22.5	31.5	36.5	23.6						
		240.9	11.6	1069	2.3				17.5	22.5	31.5	36.5	23.6						
		220.6	12.7	979	2.7				16.5	21.2	29.6	34.3	22.2						
		184.4	15.2	818	2.9				16.5	21.2	29.6	34.3	22.2						
	PLB 1604	207.7	6.7	1843	0.8	1.5	1.1	90L/4D	6.3	7.8	13.8	17.3	10.4	68	70	66	69	73	326-340
		191.6	7.3	1700	0.8				6.3	7.8	13.8	17.3	10.4						
		158.9	8.8	1410	1.0				5.8	7.1	12.6	15.8	9.5						
		131.8	10.6	1169	1.1				5.5	6.8	12.0	15.0	9.0						
	PLB 1604	131.8	6.8	1819	0.8	1.5	1.1	100L/6D	6.3	7.8	13.8	17.3	10.4	77	79	75	78	82	326-340

P1 (kW)		iges	n2 (rpm)	M2 (Nm)	fs	Pt (20°C) (kW)	Pt (40°C) (kW)	Motor IE2	FR (kN)					~ Kg					mm
									MC	MS	PC	PS	CPC	M...	P...	F	FS	CPC	
1.50	PLB 1604	394.2	7.1	1749	0.8	1.5	1.1	90L/2C	6.3	7.8	13.8	17.3	10.4	67.5	69.5	65.5	68.5	72.5	326-340
		363.7	7.7	1614	0.9				6.1	7.4	13.2	16.5	9.9						
		327.1	8.6	1451	0.9				5.8	7.1	12.6	15.8	9.5						
		301.7	9.3	1339	1.0				5.8	7.1	12.6	15.8	9.5						
		230.9	12.1	1024	1.3				5.5	6.8	12.0	15.0	9.0						
		207.7	13.5	921	1.4				5.2	6.3	11.3	14.1	8.5						
		191.6	14.6	850	1.5				5.2	6.3	11.3	14.1	8.5						
		158.9	17.6	705	1.7				4.6	5.6	10.0	12.5	7.5						
		131.8	21.2	585	2.0				4.6	5.6	10.0	12.5	7.5						
	PLB 1004	230.9	12.1	1024	0.8	1.5	1.1	90L/2C	5.5	6.8	12.0	15.0	9.0	65.5	67.5	63.5	66.5	70.5	304-318
		207.7	13.5	921	0.9				5.2	6.3	11.3	14.1	8.5						
		191.6	14.6	850	1.0				5.2	6.3	11.3	14.1	8.5						
		158.9	17.6	705	1.1				4.6	5.6	10.0	12.5	7.5						
		131.8	21.2	585	1.3				4.6	5.6	10.0	12.5	7.5						
	PLB 16003	266.4	3.4	3810	2.2	15.0	10.5	100L/6D	46.5	82.2	108.5	144.2	34.9	197	224	166	202	247	428-445
	PLB 10003	266.4	3.4	3810	1.5	15.0	10.5	100L/6D	50.4	73.6	-	-	37.8	189	-	157	194	239	410-421
		221.0	4.1	3161	2.4				47.1	68.9	-	-	35.3						
		182.9	4.9	2616	2.8				43.9	64.1	-	-	32.9						
	PLB 10003	266.4	5.3	2450	2.2	15.0	10.5	90L/4D	43.9	64.1	-	-	32.9	180	-	148	185	230	410-421
	PLB 7003	148.9	6.0	2130	1.6	14.0	9.8	100L/6D	-	-	69.0	82.8	51.8	-	129	111	132	146	392-403
		123.3	7.3	1764	2.2				-	-	66.1	79.4	49.6						
		106.3	8.5	1520	3.0				-	-	63.3	75.9	47.4						
	PLB 7003	148.9	9.4	1369	2.2	14.0	9.8	90L/4D	-	-	60.4	72.5	45.3	-	120	102	123	137	392-403
	PLB 5003	143.5	6.3	2053	1.1	10.0	7.0	100L/6D	21.0	27.0	37.8	43.8	28.4	94	103	85	96	107	370-385
		118.8	7.6	1699	1.6				19.3	24.8	34.7	40.2	26.0						
		102.3	8.8	1463	2.1				18.4	23.6	33.1	38.3	24.8						
		91.1	9.9	1303	1.6				17.5	22.5	31.5	36.5	23.6						
		84.9	10.6	1214	2.5				17.5	22.5	31.5	36.5	23.6						
		75.4	11.9	1078	2.4				17.5	22.5	31.5	36.5	23.6						
	PLB 5003	143.5	9.8	1319	1.6	10.0	7.0	90L/4D	17.5	22.5	31.5	36.5	23.6	85	94	76	87	98	370-385
		118.8	11.8	1092	2.3				17.5	22.5	31.5	36.5	23.6						
		102.3	13.7	941	3.0				16.5	21.2	29.6	34.3	22.2						
		91.1	15.4	838	2.3				16.5	21.2	29.6	34.3	22.2						
	PLB 5003	143.5	19.5	660	2.8	10.0	7.0	90L/2C	14.5	18.7	26.1	30.3	19.6	84.5	93.5	75.5	86.5	97.5	370-385
	PLB 2503	118.8	7.6	1699	1.1	8.0	5.6	100L/6D	19.3	24.8	34.7	40.2	26.0	88	97	80	90	101	348-363
		102.3	8.8	1463	1.5				18.4	23.6	33.1	38.3	24.8						
		91.1	9.9	1303	1.0				17.5	22.5	31.5	36.5	23.6						
		84.9	10.6	1214	1.7				17.5	22.5	31.5	36.5	23.6						
		75.4	11.9	1078	1.6				17.5	22.5	31.5	36.5	23.6						
		67.8	13.3	970	2.5				16.5	21.2	29.6	34.3	22.2						
		53.9	16.7	771	2.5				16.5	21.2	29.6	34.3	22.2						
	PLB 2503	143.5	9.8	1319	1.0	8.0	5.6	90L/4D	17.5	22.5	31.5	36.5	23.6	79	88	71	81	92	348-363
		118.8	11.8	1092	1.6				17.5	22.5	31.5	36.5	23.6						
		102.3	13.7	941	2.1				16.5	21.2	29.6	34.3	22.2						
		91.1	15.4	838	1.5				16.5	21.2	29.6	34.3	22.2						
		84.9	16.5	781	2.5				16.5	21.2	29.6	34.3	22.2						
		75.4	18.6	693	2.3				14.5	18.7	26.1	30.3	19.6						
	PLB 2503	143.5	19.5	660	1.8	8.0	5.6	90L/2C	14.5	18.7	26.1	30.3	19.6	78.5	87.5	70.5	80.5	91.5	348-363
		118.8	23.6	546	2.7				13.7	17.6	24.6	28.5	18.4						
		91.1	30.7	419	2.7				13.0	16.7	23.3	27.0	17.5						
	PLB 1603	84.9	10.6	1214	1.1	5.0	3.5	100L/6D	5.5	6.8	9.4	15.0	9.0	71	73	69	72	76	326-340
		70.4	12.8	1007	1.3				5.2	6.3	10.0	14.1	8.5						
		58.4	15.4	835	1.5				5.2	6.3	11.3	14.1	8.5						
		53.9	16.7	771	1.6				5.2	6.3	11.3	14.1	8.5						
		44.7	20.1	639	1.8				4.6	5.6	11.3	12.5	7.5						
		37.1	24.3	531	2.2				4.3	5.3	12.0	11.7	7.0						
	PLB 1603	110.9	12.6	1020	0.9	5.0	3.5	90L/4D	5.2	6.3	11.3	14.1	8.5	62	64	60	63	67	326-340
		92.0	15.2	846	1.1				5.2	6.3	11.3	14.1	8.5						
		84.9	16.5	781	1.6				5.2	6.3	11.3	14.1	8.5						
		70.4	19.9	647	1.8				4.6	5.6	10.0	12.5	7.5						
		58.4	24.0	537	2.1				4.3	5.3	9.4	11.7	7.0						
		53.9	26.0	496	2.3				4.3	5.3	9.4	11.7	7.0						
		44.7	31.3	411	2.7				4.1	5.0	8.9	11.1	6.7						
	PLB 1603	171.6	16.3	789	0.9	5.0	3.5	90L/2C	5.2	6.3	11.3	14.1	8.5	61.5	63.5	59.5	62.5	66.5	326-340
		133.6	21.0	614	1.1				4.6	5.6	10.0	12.5	7.5						
		110.9	25.2	510	1.6				4.3	5.3	9.4	11.7	7.0						
		92.0	30.4	423	1.9				4.1	5.0	8.9	11.1	6.7						
		84.9	33.0	390	2.8				3.9	4.7	8.4	10.5	6.3						

P1 (kW)		iges	n2 (rpm)	M2 (Nm)	fs	Pt (20°C) (kW)	Pt (40°C) (kW)	Motor IE2	FR (kN)					~ Kg					mm
									MC	MS	PC	PS	CPC	M...	P...	F	FS	CPC	
1.50	PLB 1003	70.4	12.8	1007	0.8	5.0	3.5	100L/6D	5.2	6.3	11.3	14.1	8.5	69	71	67	70	74	304-318
		58.4	15.4	835	1.0				5.2	6.3	11.3	14.1	8.5						
		53.9	16.7	771	1.0				5.2	6.3	11.3	14.1	8.5						
		44.7	20.1	639	1.2				4.6	5.6	10.0	12.5	7.5						
		37.1	24.3	531	1.4				4.3	5.3	9.4	11.7	7.0						
	PLB 1003	84.9	16.5	781	1.0	5.0	3.5	90L/4D	5.2	6.3	11.3	14.1	8.5	60	62	58	61	65	304-318
		70.4	19.9	647	1.2				4.6	5.6	10.0	12.5	7.5						
		58.4	24.0	537	1.4				4.3	5.3	9.4	11.7	7.0						
		53.9	26.0	496	1.5				4.3	5.3	9.4	11.7	7.0						
		44.7	31.3	411	1.7				4.1	5.0	8.9	11.1	6.7						
		37.1	37.7	341	2.0				3.7	4.5	8.0	10.1	6.0						
	PLB 1003	133.6	21.0	614	0.8	5.0	3.5	90L/2C	4.6	5.6	10.0	12.5	7.5	59.5	61.5	57.5	60.5	64.5	304-318
		110.9	25.2	510	1.1				4.3	5.3	9.4	11.7	7.0						
		92.0	30.4	423	1.2				4.1	5.0	8.9	11.1	6.7						
		84.9	33.0	390	1.8				3.9	4.7	8.4	10.5	6.3						
		70.4	39.8	324	2.1				3.7	4.5	8.0	10.1	6.0						
		58.4	47.9	268	2.5				3.5	4.3	7.7	9.6	5.8						
		53.9	51.9	248	2.6				3.5	4.3	7.7	9.6	5.8						
	PLB 5002	39.5	22.8	585	3.0	15.0	10.5	100L/6D	13.7	17.6	24.6	28.5	18.4	86	95	78	88	99	370-385
	PLB 1602	19.8	45.5	293	2.1	8.0	5.6	100L/6D	3.6	4.4	7.8	9.8	5.9	65	67	63	66	70	326-340
		16.4	54.9	243	2.9				3.4	4.2	7.4	9.3	5.6						
	PLB 1602	19.8	70.7	189	3.0	8.0	5.6	90L/4D	3.1	3.8	6.8	8.6	5.1	56	58	54	57	61	326-340
	PLB 1002	19.8	45.5	293	1.4	8.0	5.6	100L/6D	3.6	4.4	7.8	9.8	5.9	63	65	61	64	68	304-318
		16.4	54.9	243	1.9				3.4	4.2	7.4	9.3	5.6						
	PLB 1002	19.8	70.7	189	2.1	8.0	5.6	90L/4D	3.1	3.8	6.8	8.6	5.1	54	56	52	55	59	304-318
		16.4	85.4	156	2.8				2.9	3.6	6.4	8.0	4.8						
2.20	PLB 50004	1598.6	0.6	32362	1.4	20.0	14.0	112M/6C	178.0	246.0	-	-	133.5	470	-	412	425	578	536-549
		1348.8	0.7	27305	2.0				178.0	246.0	-	-	133.5						
		1119.0	0.8	22653	2.4				178.0	246.0	-	-	133.5						
		961.2	0.9	19458	2.7				178.0	246.0	-	-	133.5						
		926.1	1.0	18748	2.8				178.0	246.0	-	-	133.5						
		856.4	1.1	17337	3.0				178.0	246.0	-	-	133.5						
	PLB 50004	1598.6	0.9	20804	2.1	20.0	14.0	100L/4C	178.0	246.0	-	-	133.5	466	-	408	421	574	536-549
		1348.8	1.0	17553	3.0				178.0	246.0	-	-	133.5						
	PLB 35004	1253.8	0.7	25382	1.6	17.0	11.9	112M/6C	144.0	204.0	-	-	108.0	338	-	302	310	401	516-529
		1037.7	0.9	21007	1.8				144.0	204.0	-	-	108.0						
		860.9	1.0	17428	2.1				144.0	204.0	-	-	108.0						
		741.3	1.2	15007	2.4				144.0	204.0	-	-	108.0						
		658.8	1.4	13337	2.7				144.0	204.0	-	-	108.0						
		591.8	1.5	11980	2.9				122.4	173.4	-	-	91.8						
	PLB 35004	1253.8	1.1	16317	2.3	17.0	11.9	100L/4C	144.0	204.0	-	-	108.0	334	-	298	306	397	516-529
		1037.7	1.3	13505	2.6				144.0	204.0	-	-	108.0						
	PLB 30004	1385.5	0.6	28048	1.1	17.0	11.9	112M/6C	90.0	137.0	-	-	67.5	332	-	291	299	395	496-509
		951.2	0.9	19256	1.5				90.0	137.0	-	-	67.5						
		819.1	1.1	16582	1.7				90.0	137.0	-	-	67.5						
		729.3	1.2	14764	1.8				90.0	137.0	-	-	67.5						
		676.7	1.3	13699	2.5				90.0	137.0	-	-	67.5						
		598.9	1.5	12124	2.1				90.0	137.0	-	-	67.5						
		519.8	1.7	10523	2.4				76.5	116.5	-	-	57.4						
	PLB 30004	1385.5	1.0	18031	1.6	17.0	11.9	100L/4C	90.0	137.0	-	-	67.5	328	-	287	295	391	496-509
		951.2	1.5	12379	2.1				90.0	137.0	-	-	67.5						
		819.1	1.7	10660	2.4				76.5	116.5	-	-	57.4						
		729.3	1.9	9491	2.6				76.5	116.5	-	-	57.4						
	PLB 30004	1385.5	2.0	9015	2.7	17.0	11.9	90L/2D	76.5	116.5	-	-	57.4	320	-	279	287	383	496-509
	PLB 25004	1430.9	0.6	28967	0.8	15.0	10.5	112M/6C	90.0	137.0	-	-	67.5	301	-	265	273	364	476-489
		1190.5	0.8	24100	1.2				90.0	137.0	-	-	67.5						
		985.2	0.9	19944	1.4				90.0	137.0	-	-	67.5						
		789.4	1.1	15980	2.2				90.0	137.0	-	-	67.5						
		731.4	1.2	14806	1.8				90.0	137.0	-	-	67.5						
		651.2	1.4	13183	2.0				90.0	137.0	-	-	67.5						
		562.6	1.6	11389	2.9				76.5	116.5	-	-	57.4						
	PLB 25004	1726.9	0.8	22474	1.0	15.0	10.5	100L/4C	90.0	137.0	-	-	67.5	297	-	261	269	360	476-489
		1430.9	1.0	18622	1.2				90.0	137.0	-	-	67.5						
		1190.5	1.2	15493	1.7				90.0	137.0	-	-	67.5						
		985.2	1.4	12821	2.0				90.0	137.0	-	-	67.5						
		731.4	1.9	9518	2.6				76.5	116.5	-	-	57.4						
		651.2	2.1	8475	2.9				76.5	116.5	-	-	57.4						
	PLB 25004	1726.9	1.6	11237	1.8	15.0	10.5	90L/2D	76.5	116.5	-	-	57.4	289	-	253	261	352	476-489
		1430.9	2.0	9311	2.0				76.5	116.5	-	-	57.4						

P1 (kW)		iges	n2 (rpm)	M2 (Nm)	fs	Pt (20°C) (kW)	Pt (40°C) (kW)	Motor IE2	FR (kN) MC	MS	PC	PS	CPC	~ Kg M…	P…	F	FS	CPC	mm
2.20		981.2	0.9	19863	1.0				60.0	106.0	140.0	186.0	45.0						
		812.0	1.1	16438	1.1				60.0	106.0	140.0	186.0	45.0						
		749.1	1.2	15165	1.2				60.0	106.0	140.0	186.0	45.0						
		699.2	1.3	14154	1.2				60.0	106.0	140.0	186.0	45.0						
		622.5	1.4	12602	1.4				60.0	106.0	140.0	186.0	45.0						
		580.7	1.5	11756	1.7				51.0	90.1	119.0	158.1	38.3						
	PLB 18004	558.2	1.6	11300	1.5	13.0	9.1	112M/6C	51.0	90.1	119.0	158.1	38.3	208	235	177	213	258	452-469
		500.1	1.8	10124	1.9				51.0	90.1	119.0	158.1	38.3						
		442.9	2.0	8966	2.1				51.0	90.1	119.0	158.1	38.3						
		394.3	2.3	7982	2.3				51.0	90.1	119.0	158.1	38.3						
		353.6	2.5	7158	2.5				46.5	82.2	108.5	144.2	34.9						
		323.8	2.8	6555	2.7				46.5	82.2	108.5	144.2	34.9						
		281.0	3.2	5689	3.0				46.5	82.2	108.5	144.2	34.9						
		981.2	1.4	12769	1.3				60.0	106.0	140.0	186.0	45.0						
		812.0	1.7	10567	1.6				51.0	90.1	119.0	158.1	38.3						
		749.1	1.9	9749	1.7				51.0	90.1	119.0	158.1	38.3						
		699.2	2.0	9099	1.8				51.0	90.1	119.0	158.1	38.3						
	PLB 18004	622.5	2.2	8101	2.0	13.0	9.1	100L/4C	51.0	90.1	119.0	158.1	38.3	204	231	173	209	254	452-469
		580.7	2.4	7557	2.4				51.0	90.1	119.0	158.1	38.3						
		558.2	2.5	7264	2.1				46.5	82.2	108.5	144.2	34.9						
		500.1	2.8	6508	2.7				46.5	82.2	108.5	144.2	34.9						
		442.9	3.2	5764	3.0				46.5	82.2	108.5	144.2	34.9						
		981.2	2.9	6385	2.4				46.5	82.2	108.5	144.2	34.9						
	PLB 18004	812.0	3.4	5284	2.8	13.0	9.1	90L/2D	46.5	82.2	108.5	144.2	34.9	196	223	165	201	246	452-469
		749.1	3.7	4874	3.0				43.5	76.9	101.5	134.9	32.6						
		803.9	1.1	16274	1.0				60.0	106.0	140.0	186.0	45.0						
		665.3	1.4	13468	1.1				60.0	106.0	140.0	186.0	45.0						
		551.9	1.6	11173	1.3				51.0	90.1	119.0	158.1	38.3						
		510.4	1.8	10332	1.4				51.0	90.1	119.0	158.1	38.3						
		457.4	2.0	9260	1.5				51.0	90.1	119.0	158.1	38.3						
	PLB 16004	418.9	2.1	8480	1.6	11.0	7.7	112M/6C	51.0	90.1	119.0	158.1	38.3	183	210	152	188	233	428-445
		379.5	2.4	7683	1.8				51.0	90.1	119.0	158.1	38.3						
		347.5	2.6	7035	1.9				46.5	82.2	108.5	144.2	34.9						
		320.6	2.8	6490	2.7				46.5	82.2	108.5	144.2	34.9						
		301.8	3.0	6110	2.2				46.5	82.2	108.5	144.2	34.9						
		290.4	3.1	5879	2.9				46.5	82.2	108.5	144.2	34.9						
		240.9	3.7	4877	2.6				43.5	76.9	101.5	134.9	32.6						
		969.0	1.4	12610	0.9				60.0	106.0	140.0	186.0	45.0						
		803.9	1.7	10462	1.4				51.0	90.1	119.0	158.1	38.3						
		665.3	2.1	8658	1.6				51.0	90.1	119.0	158.1	38.3						
		551.9	2.5	7182	1.9				46.5	82.2	108.5	144.2	34.9						
	PLB 16004	510.4	2.7	6642	2.0	11.0	7.7	100L/4C	46.5	82.2	108.5	144.2	34.9	179	206	148	184	229	428-445
		457.4	3.1	5953	2.2				46.5	82.2	108.5	144.2	34.9						
		418.9	3.3	5452	2.3				46.5	82.2	108.5	144.2	34.9						
		379.5	3.7	4939	2.5				43.5	76.9	101.5	134.9	32.6						
		347.5	4.0	4522	2.8				43.5	76.9	101.5	134.9	32.6						
		969.0	2.9	6305	1.6				46.5	82.2	108.5	144.2	34.9						
	PLB 16004	803.9	3.5	5231	2.4	11.0	7.7	90L/2D	46.5	82.2	108.5	144.2	34.9	171	198	140	176	221	428-445
		665.3	4.2	4329	2.8				43.5	76.9	101.5	134.9	32.6						
		551.9	1.6	11173	0.8				55.3	80.8	-	-	41.4						
		510.4	1.8	10332	0.8				55.3	80.8	-	-	41.4						
		457.4	2.0	9260	0.9				55,3	80.8	-	-	41.4						
		418.9	2.1	8480	1.0				55.3	80.8	-	-	41.4						
		379.5	2.4	7683	1.1				55.3	80.8	-	-	41.4						
		350.0	2.6	7085	1.1				50.4	73.6	-	-	37.8						
	PLB 10004	320.6	2.8	6490	1.6	11.0	7.7	112M/6C	50.4	73.6	-	-	37.8	175	-	143	180	225	410-421
		301.8	3.0	6110	1.7				50.4	73.6	-	-	37.8						
		278.4	3.2	5636	2.1				50.4	73.6	-	-	37.8						
		265.9	3.4	5383	1.8				50.4	73.6	-	-	37.8						
		230.9	3.9	4674	2.4				47.1	68.9	-	-	35.3						
		203.5	4.4	4120	2.3				47.1	68.9	-	-	35.3						
		184.4	4.9	3733	2.5				43.9	64.1	-	-	32.9						
		803.9	1.7	10462	0.8				55.3	80.8	-	-	41.4						
		665.3	2.1	8658	1.0				55.3	80.8	-	-	41.4						
		551.9	2.5	7182	1.1				50.4	73.6	-	-	37.8						
		510.4	2.7	6642	1.2				50.4	73.6	-	-	37.8						
		457.4	3.1	5953	1.3				50.4	73.6	-	-	37.8						
	PLB 10004	418.9	3.3	5452	1.4	11.0	7.7	100L/4C	50.4	73.6	-	-	37.8	171	-	139	176	221	410-421
		379.5	3.7	4939	1.5				47.1	68.9	-	-	35.3						
		350.0	4.0	4555	1.6				47.1	68.9	-	-	35.3						
		320.6	4.4	4172	2.3				47.1	68.9	-	-	35.3						
		301.8	4.6	3928	2.4				43.9	64.1	-	-	32.9						
		278.4	5.0	3623	3.0				43.9	64.1	-	-	32.9						
		265.9	5.3	3460	2.6				43.9	64.1	-	-	32.9						

P1 (kW)		iges	n2 (rpm)	M2 (Nm)	fs	Pt (20°C) (kW)	Pt (40°C) (kW)	Motor IE2	FR (kN)					~ Kg					mm
									MC	MS	PC	PS	CPC	M...	P...	F	FS	CPC	
2.20	PLB 10004	969.0	2.9	6305	1.0	11.0	7.7	90L/2D	50.4	73.6	-	-	37.8	163	-	131	168	213	410-421
		803.9	3.5	5231	1.5				50.4	73.6	-	-	37.8						
		665.3	4.2	4329	1.7				47.1	68.9	-	-	35.3						
		551.9	5.1	3591	2.0				43.9	64.1	-	-	32.9						
		510.4	5.5	3321	2.1				43.9	64.1	-	-	32.9						
		457.4	6.1	2976	2.3				39.0	57.0	-	-	29.3						
		418.9	6.7	2726	2.5				37.4	54.6	-	-	28.0						
		379.5	7.4	2469	2.7				37.4	54.6	-	-	28.0						
		350.0	8.0	2277	2.9				35.8	52.3	-	-	26.8						
	PLB 7004	361.7	2.5	7322	0.9	8.0	5.6	112M/6C	-	-	97.8	117.3	73.3	-	139	120	142	155	392-403
		331.2	2.7	6705	0.9				-	-	89.1	107.0	66.8						
		300.1	3.0	6075	1.0				-	-	89.1	107.0	66.8						
		274.8	3.3	5563	1.1				-	-	89.1	107.0	66.8						
		248.4	3.6	5029	1.3				-	-	83.4	100.1	62.5						
		229.6	3.9	4648	1.3				-	-	83.4	100.1	62.5						
		210.3	4.3	4257	1.4				-	-	83.4	100.1	62.5						
		190.1	4.7	3848	1.6				-	-	77.6	93.2	58.2						
		174.1	5.2	3524	1.7				-	-	77.6	93.2	58.2						
		157.7	5.7	3192	1.9				-	-	69.0	82.8	51.8						
	PLB 7004	511.5	2.7	6657	0.8	8.0	5.6	100L/4C	-	-	89.1	107.0	66.8	-	135	116	138	151	392-403
		453.0	3.1	5895	1.0				-	-	89.1	107.0	66.8						
		393.0	3.6	5114	0.9				-	-	83.4	100.1	62.5						
		361.7	3.9	4707	1.3				-	-	83.4	100.1	62.5						
		331.2	4.2	4310	1.4				-	-	83.4	100.1	62.5						
		300.1	4.7	3905	1.5				-	-	77.6	93.2	58.2						
		274.8	5.1	3576	1.6				-	-	77.6	93.2	58.2						
		248.4	5.6	3233	1.9				-	-	69.0	82.8	51.8						
		229.6	6.1	2988	1.8				-	-	69.0	82.8	51.8						
		210.3	6.7	2737	2.0				-	-	66.1	79.4	49.6						
		190.1	7.4	2474	2.4				-	-	66.1	79.4	49.6						
		174.1	8.0	2266	2.5				-	-	63.3	75.9	47.4						
		157.7	8.9	2052	2.7				-	-	60.4	72.5	45.3						
	PLB 7004	921.5	3.0	5996	0.9	8.0	5.6	90L/2D	-	-	89.1	107.0	66.8	-	127	108	130	143	392-403
		832.6	3.4	5418	0.8				-	-	89.1	107.0	66.8						
		717.7	3.9	4670	1.1				-	-	83.4	100.1	62.5						
		656.7	4.3	4273	1.2				-	-	83.4	100.1	62.5						
		594.0	4.7	3865	1.3				-	-	77.6	93.2	58.2						
		557.0	5.0	3624	1.2				-	-	77.6	93.2	58.2						
		511.5	5.5	3328	1.5				-	-	77.6	93.2	58.2						
		453.0	6.2	2948	1.9				-	-	69.0	82.8	51.8						
		393.0	7.1	2557	1.6				-	-	66.1	79.4	49.6						
		361.7	7.7	2354	2.2				-	-	63.3	75.9	47.4						
		331.2	8.5	2155	2.4				-	-	63.3	75.9	47.4						
		300.1	9.3	1953	2.6				-	-	60.4	72.5	45.3						
		274.8	10.2	1788	2.8				-	-	57.5	69.0	43.1						
	PLB 5004	320.6	2.8	6490	0.8	6.0	4.2	112M/6C	27.1	34.9	48.8	56.6	36.6	103	112	94	105	116	370-385
		290.4	3.1	5879	0.8				27.1	34.9	48.8	56.6	36.6						
		265.9	3.4	5383	0.9				27.1	34.9	48.8	56.6	36.6						
		240.9	3.7	4877	0.9				25.4	32.6	45.7	52.9	34.3						
		220.6	4.1	4466	1.0				25.4	32.6	45.7	52.9	34.3						
		184.4	4.9	3733	1.1				23.6	30.4	42.5	49.3	31.9						
		168.9	5.3	3419	1.3				23.6	30.4	42.5	49.3	31.9						
		140.1	6.4	2836	1.5				21.0	27.0	37.8	43.8	28.4						
	PLB 5004	449.4	3.1	5848	0.8	6.0	4.2	100L/4C	27.1	34.9	48.8	56.6	36.6	99	108	90	101	112	370-385
		350.0	4.0	4555	0.9				25.4	32.6	45.7	52.9	34.3						
		320.6	4.4	4172	1.1				25.4	32.6	45.7	52.9	34.3						
		290.4	4.8	3779	1.1				23.6	30.4	42.5	49.3	31.9						
		265.9	5.3	3460	1.3				23.6	30.4	42.5	49.3	31.9						
		240.9	5.8	3135	1.3				21.0	27.0	37.8	43.8	28.4						
		220.6	6.3	2871	1.5				21.0	27.0	37.8	43.8	28.4						
		184.4	7.6	2400	1.6				19.3	24.8	34.7	40.2	26.0						
		168.9	8.3	2198	1.9				19.3	24.8	34.7	40.2	26.0						
		140.1	10.0	1823	2.2				17.5	22.5	31.5	36.5	23.6						
	PLB 5004	551.9	5.1	3591	0.8	6.0	4.2	90L/2D	23.6	30.4	42.5	49.3	31.9	91	100	82	93	104	370-385
		509.1	5.5	3313	0.9				23.6	30.4	42.5	49.3	31.9						
		475.3	5.9	3093	1.1				21.0	27.0	37.8	43.8	28.4						
		449.4	6.2	2924	1.4				21.0	27.0	37.8	43.8	28.4						
		422.4	6.6	2749	1.0				20.1	25.9	36.2	42.0	27.2						
		350.0	8.0	2277	1.7				19.3	24.8	34.7	40.2	26.0						
		320.6	8.7	2086	2.0				18.4	23.6	33.1	38.3	24.8						
		290.4	9.6	1890	2.0				17.5	22.5	31.5	36.5	23.6						
		265.9	10.5	1730	2.3				17.5	22.5	31.5	36.5	23.6						
		240.9	11.6	1568	2.3				17.5	22.5	31.5	36.5	23.6						
		220.6	12.7	1435	2.7				16.5	21.2	29.6	34.3	22.2						
		184.4	15.2	1200	2.9				16.5	21.2	29.6	34.3	22.2						

P1 (kW)		iges	n2 (rpm)	M2 (Nm)	fs	Pt (20°C) (kW)	Pt (40°C) (kW)	Motor IE2	FR (kN)					~ Kg					mm
									MC	MS	PC	PS	CPC	M...	P...	F	FS	CPC	
2.20	PLB 2504	320.6	4.4	4172	0.8	4.0	2.8	100L/4C	25.4	32.6	45.7	52.9	34.3	93	102	84	95	106	348-363
		265.9	5.3	3460	0.9				23.6	30.4	42.5	49.3	31.9						
		240.9	5.8	3135	0.9				21.0	27.0	37.8	43.8	28.4						
		220.6	6.3	2871	1.0				21.0	27.0	37.8	43.8	28.4						
		184.4	7.6	2400	1.1				19.3	24.8	34.7	40.2	26.0						
		168.9	8.3	2198	1.3				19.3	24.8	34.7	40.2	26.0						
		140.1	10.0	1823	1.5				17.5	22.5	31.5	36.5	23.6						
	PLB 2504	184.4	4.9	3733	0.8	4.0	2.8	112M/6C	23.6	30.4	42.5	49.3	31.9	97	106	88	99	110	348-363
		168.9	5.3	3419	0.9				23.6	30.4	42.5	49.3	31.9						
		140.1	6.4	2836	1.1				21.0	27.0	37.8	43.8	28.4						
	PLB 2504	449.4	6.2	2924	0.9	4.0	2.8	90L/2D	21.0	27.0	37.8	43.8	28.4	85	94	76	87	98	348-363
		350.0	8.0	2277	1.1				19.3	24.8	34.7	40.2	26.0						
		320.6	8.7	2086	1.4				18.4	23.6	33.1	38.3	24.8						
		290.4	9.6	1890	1.3				17.5	22.5	31.5	36.5	23.6						
		265.9	10.5	1730	1.6				17.5	22.5	31.5	36.5	23.6						
		240.9	11.6	1568	1.6				17.5	22.5	31.5	36.5	23.6						
		220.6	12.7	1435	1.9				16.5	21.2	29.6	34.3	22.2						
		184.4	15.2	1200	2.0				16.5	21.2	29.6	34.3	22.2						
		168.9	16.6	1099	2.3				16.5	21.2	29.6	34.3	22.2						
		140.1	20.0	912	2.7				14.5	18.7	26.1	30.3	19.6						
	PLB 1604	131.8	10.6	1715	0.8	1.5	1.1	100L/4C	5.5	6.8	12.0	15.0	9.0	76	78	74	77	81	326-340
	PLB 1604	230.9	12.1	1502	0.9	1.5	1.1	90L/2D	5.5	6.8	12.0	15.0	9.0	68	70	66	69	73	326-340
		207.7	13.5	1351	0.9				5.2	6.3	11.3	14.1	8.5						
		191.6	14.6	1247	1.0				5.2	6.3	11.3	14.1	8.5						
		158.9	17.6	1034	1.2				4.6	5.6	10.0	12.5	7.5						
		131.8	21.2	858	1.4				4.6	5.6	10.0	12.5	7.5						
	PLB 1004	158.9	17.6	1034	0.8	1.5	1.1	90L/2D	4.6	5.6	10.0	12.5	7.5	66	68	64	67	71	304-318
		131.8	21.2	858	0.9				4.6	5.6	10.0	12.5	7.5						
	PLB 16003	266.4	3.4	5589	1.5	15.0	10.5	112M/6C	46.5	82.2	108.5	144.2	34.9	200	227	169	205	250	428-445
		221.0	4.1	4636	2.4				43.5	76.9	101.5	134.9	32.6						
		182.9	4.9	3837	2.8				40.5	71.6	94.5	125.6	30.4						
	PLB 16003	266.4	5.3	3593	2.2	15.0	10.5	100L/4C	40.5	71.6	94.5	125.6	30.4	196	223	165	201	246	428-445
	PLB 10003	266.4	3.4	5589	1.0	15.0	10.5	112M/6C	50.4	73.6	-	-	37.8	192	-	160	197	242	410-421
		221.0	4.1	4636	1.6				47.1	68.9	-	-	35.3						
		182.9	4.9	3837	1.9				43.9	64.1	-	-	32.9						
		157.5	5.7	3304	2.1				39.0	57.0	-	-	29.3						
		140.0	6.4	2937	3.0				39.0	57.0	-	-	29.3						
		125.8	7.2	2639	2.6				37.4	54.6	-	-	28.0						
		116.1	7.8	2436	2.7				35.8	52.3	-	-	26.8						
	PLB 10003	266.4	5.3	3593	1.5	15.0	10.5	100L/4C	43.9	64.1	-	-	32.9	188	-	156	193	238	410-421
		221.0	6.3	2980	2.3				39.0	57.0	-	-	29.3						
		182.9	7.7	2467	2.7				35.8	52.3	-	-	26.8						
	PLB 10003	266.4	10.5	1796	2.7	15.0	10.5	90L/2D	32.5	47.5	-	-	24.4	180	-	148	185	230	410-421
	PLB 7003	148.9	6.0	3124	1.1	14.0	9.8	112M/6C	-	-	69.0	82.8	51.8	-	132	114	135	149	392-403
		123.3	7.3	2587	1.5				-	-	66.1	79.4	49.6						
		106.3	8.5	2230	2.0				-	-	63.3	75.9	47.4						
		94.2	9.6	1976	2.6				-	-	57.5	69.0	43.1						
		88.0	10.2	1846	2.4				-	-	57.5	69.0	43.1						
		77.9	11.6	1634	3.0				-	-	57.5	69.0	43.1						
	PLB 7003	148.9	9.4	2008	1.5	14.0	9.8	100L/4C	-	-	60.4	72.5	45.3	-	128	110	131	145	392-403
		123.3	11.4	1663	2.2				-	-	57.5	69.0	43.1						
		106.3	13.2	1434	3.0				-	-	54.1	64.9	40.5						
	PLB 7003	148.9	18.8	1004	2.7	14.0	9.8	90L/2D	-	-	47.7	57.3	35.8	-	120	102	123	137	392-403
	PLB 5003	118.8	7.6	2492	1.1	10.0	7.0	112M/6C	19.3	24.8	34.7	40.2	26.0	97	106	88	99	110	370-385
		102.3	8.8	2146	1.4				18.4	23.6	33.1	38.3	24.8						
		91.1	9.9	1911	1.1				17.5	22.5	31.5	36.5	23.6						
		84.9	10.6	1781	1.7				17.5	22.5	31.5	36.5	23.6						
		75.4	11.9	1582	1.6				17.5	22.5	31.5	36.5	23.6						
		67.8	13.3	1422	2.5				16.5	21.2	29.6	34.3	22.2						
		53.9	16.7	1131	2.4				16.5	21.2	29.6	34.3	22.2						
	PLB 5003	143.5	9.8	1935	1.1	10.0	7.0	100L/4C	17.5	22.5	31.5	36.5	23.6	93	102	84	95	106	370-385
		118.8	11.8	1602	1.6				17.5	22.5	31.5	36.5	23.6						
		102.3	13.7	1380	2.1				16.5	21.2	29.6	34.3	22.2						
		91.1	15.4	1229	1.6				16.5	21.2	29.6	34.3	22.2						
		84.9	16.5	1145	2.4				16.5	21.2	29.6	34.3	22.2						
		75.4	18.6	1017	2.3				14.5	18.7	26.1	30.3	19.6						
	PLB 5003	143.5	19.5	968	1.9	10.0	7.0	90L/2D	14.5	18.7	26.1	30.3	19.6	85	94	76	87	98	370-385
		118.8	23.6	801	2.8				13.7	17.6	24.6	28.5	18.4						
		91.1	30.7	614	2.8				13.0	16.7	23.3	27.0	17.5						

P1 (kW)		iges	n2 (rpm)	M2 (Nm)	fs	Pt (20°C) (kW)	Pt (40°C) (kW)	Motor IE2	FR (kN)					~ Kg					mm
									MC	MS	PC	PS	CPC	M...	P...	F	FS	CPC	
2.20	PLB 2503	102.3	8.8	2146	1.0	8.0	5.6	112M/6C	18.4	23.6	33.1	38.3	24.8	91	100	83	93	104	348-363
		84.9	10.6	1781	1.2				17.5	22.5	31.5	36.5	23.6						
		75.4	11.9	1582	1.1				17.5	22.5	31.5	36.5	23.6						
		67.8	13.3	1422	1.7				16.5	21.2	29.6	34.3	22.2						
		53.9	16.7	1131	1.7				16.5	21.2	29.6	34.3	22.2						
		47.5	18.9	996	2.5				14.5	18.7	26.1	30.3	19.6						
		39.4	22.8	827	2.9				13.7	17.6	24.6	28.5	18.4						
	PLB 2503	118.8	11.8	1602	1.1	8.0	5.6	100L/4C	17.5	22.5	31.5	36.5	23.6	87	96	79	89	100	348-363
		102.3	13.7	1380	1.4				16.5	21.2	29.6	34.3	22.2						
		91.1	15.4	1229	1.0				16.5	21.2	29.6	34.3	22.2						
		84.9	16.5	1145	1.7				16.5	21.2	29.6	34.3	22.2						
		75.4	18.6	1017	1.6				14.5	18.7	26.1	30.3	19.6						
		67.8	20.6	914	2.4				14.5	18.7	26.1	30.3	19.6						
		53.9	26.0	727	2.4				13.7	17.6	24.6	28.5	18.4						
	PLB 2503	143.5	19.5	968	1.2	8.0	5.6	90L/2D	14.5	18.7	26.1	30.3	19.6	79	88	71	81	92	348-363
		118.8	23.6	801	1.9				13.7	17.6	24.6	28.5	18.4						
		102.3	27.4	690	2.6				13.7	17.6	24.6	28.5	18.4						
		91.1	30.7	614	1.8				13.0	16.7	23.3	27.0	17.5						
		84.9	33.0	572	3.0				12.3	15.8	22.1	25.6	16.5						
		75.4	37.1	508	2.8				12.3	15.8	22.1	25.6	16.5						
	PLB 1603	70.4	12.8	1477	0.9	5.0	3.5	112M/6C	5.2	6.3	11.3	14.1	8.5	74	76	72	75	79	326-340
		58.4	15.4	1225	1.0				5.2	6.3	11.3	14.1	8.5						
		53.9	16.7	1131	1.1				5.2	6.3	11.3	14.1	8.5						
		44.7	20.1	938	1.3				4.6	5.6	10.0	12.5	7.5						
		37.1	24.3	778	1.5				4.3	5.3	9.4	11.7	7.0						
	PLB 1603	84.9	16.5	1145	1.1	5.0	3.5	100L/4C	5.2	6.3	11.3	14.1	8.5	70	72	68	71	75	326-340
		70.4	19.9	949	1.2				4.6	5.6	10.0	12.5	7.5						
		58.4	24.0	788	1.4				4.3	5.3	9.4	11.7	7.0						
		53.9	26.0	727	1.6				4.3	5.3	9.4	11.7	7.0						
		44.7	31.3	603	1.8				4.1	5.0	8.9	11.1	6.7						
		37.1	37.7	500	2.1				3.7	4.5	8.0	10.1	6.0						
	PLB 1603	133.6	21.0	901	0.8	5.0	3.5	90L/2D	4.6	5.6	10.0	12.5	7.5	62	64	60	63	67	326-340
		110.9	25.2	748	1.1				4.3	5.3	9.4	11.7	7.0						
		92.0	30.4	620	1.3				4.1	5.0	8.9	11.1	6.7						
		84.9	33.0	572	1.9				3.9	4.7	8.4	10.5	6.3						
		70.4	39.8	475	2.2				3.7	4.5	8.0	10.1	6.0						
		58.4	47.9	394	2.6				3.5	4.3	7.7	9.6	5.8						
		53.9	51.9	363	2.7				3.5	4.3	7.7	9.6	5.8						
	PLB 1003	70.4	19.9	949	0.8	5.0	3.5	100L/4C	4.6	5.6	10.0	12.5	7.5	68	70	66	69	73	304-318
		58.4	24.0	788	0.9				4.3	5.3	9.4	11.7	7.0						
		53.9	26.0	727	1.0				4.3	5.3	9.4	11.7	7.0						
		44.7	31.3	603	1.2				4.1	5.0	8.9	11.1	6.7						
		37.1	37.7	500	1.4				3.7	4.5	8.0	10.1	6.0						
	PLB 1003	44.7	20.1	938	0.8	5.0	3.5	112M/6C	4.6	5.6	10.0	12.5	7.5	72	74	70	73	77	304-318
		37.1	24.3	778	0.9				4.3	5.3	9.4	11.7	7.0						
	PLB 1003	92.0	30.4	620	0.8	5.0	3.5	90L/2D	4.1	5.0	8.9	11.1	6.7	60	62	58	61	65	304-318
		84.9	33.0	572	1.2				3.9	4.7	8.4	10.5	6.3						
		70.4	39.8	475	1.4				3.7	4.5	8.0	10.1	6.0						
		58.4	47.9	394	1.7				3.5	4.3	7.7	9.6	5.8						
		53.9	51.9	363	1.8				3.5	4.3	7.7	9.6	5.8						
		44.7	62.6	301	2.1				3.2	3.9	7.0	8.7	5.2						
		37.1	75.5	250	2.4				3.1	3.8	6.7	8.4	5.0						
	PLB 5002	39.5	22.8	859	2.1	15.0	10.5	112M/6C	13.7	17.6	24.6	28.5	18.4	89	98	81	91	102	370-385
	PLB 5002	39.5	35.4	552	3.0	15.0	10.5	100L/4C	12.3	15.8	22.1	25.6	16.5	85	94	77	87	98	370-385
	PLB 2502	21.3	42.3	463	2.3	12.0	8.4	112M/6C	11.7	15.1	21.1	24.5	15.8	85	94	73	87	98	348-363
	PLB 1602	19.8	45.5	430	1.4	8.0	5.6	112M/6C	3.6	4.4	7.8	9.8	5.9	68	70	66	69	73	326-340
		16.4	54.9	357	2.0				3.4	4.2	7.4	9.3	5.6						
	PLB 1602	19.8	70.7	277	2.0	8.0	5.6	100L/4C	3.1	3.8	6.8	8.6	5.1	64	66	62	65	69	326-340
		16.4	85.4	229	2.9				2.9	3.6	6.4	8.0	4.8						
	PLB 1002	19.8	45.5	430	1.0	8.0	5.6	112M/6C	3.6	4.4	7.8	9.8	5.9	66	68	64	67	71	304-318
		16.4	54.9	357	1.3				3.4	4.2	7.4	9.3	5.6						
		12.6	71.4	274	2.2				3.1	3.8	6.8	8.6	5.1						
		10.4	86.5	226	2.7				2.9	3.6	6.4	8.0	4.8						
	PLB 1002	19.8	70.7	277	1.4	8.0	5.6	100L/4C	3.1	3.8	6.8	8.6	5.1	62	64	60	63	67	304-318
		16.4	85.4	229	1.9				2.9	3.6	6.4	8.0	4.8						
	PLB 1002	19.8	141.4	138	2.5	8.0	5.6	90L/2D	2.5	3.1	5.5	6.9	4.1	54	56	52	55	59	304-318

P1 (kW)		iges	n2 (rpm)	M2 (Nm)	fs	Pt (20°C) (kW)	Pt (40°C) (kW)	Motor IE2	FR (kN) MC	MS	PC	PS	CPC	~ Kg M…	P…	F	FS	CPC	mm
3.00	PLB 50004	1598.6	0.6	44130	1.0	20.0	14.0	132M/6A	178.0	246.0	-	-	133.5	490	-	432	445	598	536-549
		1348.8	0.7	37234	1.5				178.0	246.0	-	-	133.5						
		1119.0	0.8	30890	1.8				178.0	246.0	-	-	133.5						
		961.2	0.9	26534	2.0				178.0	246.0	-	-	133.5						
		926.1	1.0	25565	2.1				178.0	246.0	-	-	133.5						
		856.4	1.1	23641	2.2				178.0	246.0	-	-	133.5						
		797.5	1.1	22015	2.3				178.0	246.0	-	-	133.5						
		708.7	1.3	19564	2.6				178.0	246.0	-	-	133.5						
		669.0	1.3	18468	2.7				178.0	246.0	-	-	133.5						
		587.6	1.5	16221	3.0				151.3	209.1	-	-	113.5						
	PLB 50004	1598.6	0.9	28369	1.5	20.0	14.0	100L/4D	178.0	246.0	-	-	133.5	467	-	409	422	575	536-549
		1348.8	1.0	23936	2.2				178.0	246.0	-	-	133.5						
		1119.0	1.3	19858	2.5				178.0	246.0	-	-	133.5						
		961.2	1.5	17058	2.9				178.0	246.0	-	-	133.5						
		926.1	1.5	16435	3.0				151.3	209.1	-	-	113.5						
	PLB 50004	1598.6	1.8	14185	2.7	20.0	14.0	100L/2C	151.3	209.1	-	-	113.5	467	-	409	422	575	536-549
	PLB 35004	1253.8	0.7	34611	1.2	17.0	11.9	132M/6A	144.0	204.0	-	-	108.0	358	-	322	330	421	516-529
		1037.7	0.9	28646	1.4				144.0	204.0	-	-	108.0						
		860.9	1.0	23765	1.6				144.0	204.0	-	-	108.0						
		741.3	1.2	20464	1.8				144.0	204.0	-	-	108.0						
		658.8	1.4	18186	2.0				144.0	204.0	-	-	108.0						
		591.8	1.5	16337	2.1				122.4	173.4	-	-	91.8						
		542.0	1.7	14962	2.3				122.4	173.4	-	-	91.8						
		452.9	2.0	12502	2.6				122.4	173.4	-	-	91.8						
		414.8	2.2	11451	2.8				122.4	173.4	-	-	91.8						
	PLB 35004	1253.8	1.1	22250	1.7	17.0	11.9	100L/4D	144.0	204.0	-	-	108.0	335	-	299	307	398	516-529
		1037.7	1.3	18415	1.9				144.0	204.0	-	-	108.0						
		860.9	1.6	15278	2.3				122.4	173.4	-	-	91.8						
		741.3	1.9	13155	2.5				122.4	173.4	-	-	91.8						
		658.8	2.1	11691	2.8				122.4	173.4	-	-	91.8						
	PLB 35004	1253.8	2.2	11125	2.9	17.0	11.9	100L/2C	122.4	173.4	-	-	91.8	335	-	299	307	398	516-529
	PLB 30004	1385.5	0.6	38247	0.8	17.0	11.9	132M/6A	90.0	137.0	-	-	67.5	352	-	311	319	415	496-509
		951.2	0.9	26258	1.1				90.0	137.0	-	-	67.5						
		819.1	1.1	22611	1.2				90.0	137.0	-	-	67.5						
		729.3	1.2	20132	1.3				90.0	137.0	-	-	67.5						
		676.7	1.3	18680	1.8				90.0	137.0	-	-	67.5						
		598.9	1.5	16533	1.6				90.0	137.0	-	-	67.5						
		519.8	1.7	14349	1.8				76.5	116.5	-	-	57.4						
		460.7	2.0	12718	2.5				76.5	116.5	-	-	57.4						
		385.0	2.3	10628	2.9				76.5	116.5	-	-	57.4						
	PLB 30004	1385.5	1.0	24587	1.1	17.0	11.9	100L/4D	90.0	137.0	-	-	67.5	329	-	288	296	392	496-509
		951.2	1.5	16880	1.5				90.0	137.0	-	-	67.5						
		819.1	1.7	14536	1.8				76.5	116.5	-	-	57.4						
		729.3	1.9	12942	1.9				76.5	116.5	-	-	57.4						
		676.7	2.1	12009	2.6				76.5	116.5	-	-	57.4						
		598.9	2.3	10628	2.2				76.5	116.5	-	-	57.4						
		519.8	2.7	9224	2.5				69.8	106.2	-	-	52.3						
	PLB 30004	1385.5	2.0	12294	2.0	17.0	11.9	100L/2C	76.5	116.5	-	-	57.4	329	-	288	296	392	496-509
		951.2	2.9	8440	2.7				69.8	106.2	-	-	52.3						
	PLB 25004	1190.5	0.8	32864	0.9	15.0	10.5	132M/6A	90.0	137.0	-	-	67.5	321	-	285	293	384	476-489
		985.2	0.9	27197	1.1				90.0	137.0	-	-	67.5						
		789.4	1.1	21792	1.6				90.0	137.0	-	-	67.5						
		731.4	1.2	20190	1.3				90.0	137.0	-	-	67.5						
		651.2	1.4	17977	1.5				90.0	137.0	-	-	67.5						
		562.6	1.6	15531	2.1				76.5	116.5	-	-	57.4						
		498.3	1.8	13756	2.3				76.5	116.5	-	-	57.4						
		449.2	2.0	12400	2.6				76.5	116.5	-	-	57.4						
		397.8	2.3	10981	2.8				76.5	116.5	-	-	57.4						
		364.3	2.5	10057	3.0				76.5	116.5	-	-	57.4						
	PLB 25004	1430.9	1.0	25393	0.9	15.0	10.5	100L/4D	90.0	137.0	-	-	67.5	298	-	262	270	361	476-489
		1190.5	1.2	21127	1.3				90.0	137.0	-	-	67.5						
		985.2	1.4	17484	1.5				90.0	137.0	-	-	67.5						
		789.4	1.8	14009	2.3				76.5	116.5	-	-	57.4						
		731.4	1.9	12980	1.9				76.5	116.5	-	-	57.4						
		651.2	2.1	11556	2.1				76.5	116.5	-	-	57.4						
	PLB 25004	1726.9	1.6	15323	1.3	15.0	10.5	100L/2C	76.5	116.5	-	-	57.4	298	-	262	270	361	476-489
		1430.9	2.0	12697	1.5				76.5	116.5	-	-	57.4						
		1190.5	2.4	10563	2.3				76.5	116.5	-	-	57.4						
		985.2	2.8	8742	2.7				69.8	106.2	-	-	52.3						

P1 (kW)		iges	n2 (rpm)	M2 (Nm)	fs	Pt (20°C) (kW)	Pt (40°C) (kW)	Motor IE2	FR (kN)					~ Kg					mm
									MC	MS	PC	PS	CPC	M...	P...	F	FS	CPC	
3.00		812.0	1.1	22415	0.8				60.0	106.0	140.0	186.0	45.0						
		749.1	1.2	20679	0.9				60.0	106.0	140.0	186.0	45.0						
		699.2	1.3	19302	0.9				60.0	106.0	140.0	186.0	45.0						
		622.5	1.4	17184	1.0				60.0	106.0	140.0	186.0	45.0						
		580.7	1.5	16030	1.2				51.0	90.1	119.0	158.1	38.3						
		558.2	1.6	15409	1.1				51.0	90.1	119.0	158.1	38.3						
	PLB 18004	500.1	1.8	13805	1.4	13.0	9.1	132M/6A	51.0	90.1	119.0	158.1	38.3	228	255	197	233	278	452-469
		442.9	2.0	12226	1.5				51.0	90.1	119.0	158.1	38.3						
		394.3	2.3	10885	1.7				51.0	90.1	119.0	158.1	38.3						
		353.6	2.5	9761	1.8				46.5	82.2	108.5	144.2	34.9						
		323.8	2.8	8939	2.0				46.5	82.2	108.5	144.2	34.9						
		281.0	3.2	7757	2.2				46.5	82.2	108.5	144.2	34.9						
		224.4	4.0	6195	2.7				43.5	76.9	101.5	134.9	32.6						
		981.2	1.4	17413	1.0				60.0	106.0	140.0	186.0	45.0						
		812.0	1.7	14410	1.2				51.0	90.1	119.0	158.1	38.3						
		749.1	1.9	13294	1.2				51.0	90.1	119.0	158.1	38.3						
		699.2	2.0	12408	1.3				51.0	90.1	119.0	158.1	38.3						
		622.5	2.2	11047	1.4				51.0	90.1	119.0	158.1	38.3						
	PLB 18004	580.7	2.4	10305	1.7	13.0	9.1	100L/4D	51.0	90.1	119.0	158.1	38.3	205	232	174	210	255	452-469
		558.2	2.5	9906	1.6				46.5	82.2	108.5	144.2	34.9						
		500.1	2.8	8875	2.0				46.5	82.2	108.5	144.2	34.9						
		442.9	3.2	7860	2.2				46.5	82.2	108.5	144.2	34.9						
		394.3	3.6	6997	2.4				43.5	76.9	101.5	134.9	32.6						
		353.6	4.0	6275	2.6				43.5	76.9	101.5	134.9	32.6						
		323.8	4.3	5746	2.8				43.5	76.9	101.5	134.9	32.6						
		981.2	2.9	8706	1.8				46.5	82.2	108.5	144.2	34.9						
		812.0	3.4	7205	2.0				46.5	82.2	108.5	144.2	34.9						
	PLB 18004	749.1	3.7	6647	2.2	13.0	9.1	100L/2C	43.5	76.9	101.5	134.9	32.6	205	232	174	210	255	452-469
		699.2	4.0	6204	2.3				43.5	76.9	101.5	134.9	32.6						
		622.5	4.5	5524	2.6				43.5	76.9	101.5	134.9	32.6						
		558.2	5.0	4953	2.8				40.5	71.6	94.5	125.6	30.4						
		665.3	1.4	18366	0.8				60.0	106.0	140.0	186.0	45.0						
		551.9	1.6	15235	1.0				51.0	90.1	119.0	158.1	38.3						
		510.4	1.8	14090	1.0				51.0	90.1	119.0	158.1	38.3						
		457.4	2.0	12627	1.1				51.0	90.1	119.0	158.1	38.3						
		418.9	2.1	11564	1.2				51.0	90.1	119.0	158.1	38.3						
		379.5	2.4	10476	1.3				51.0	90.1	119.0	158.1	38.3						
	PLB 16004	347.5	2.6	9593	1.4	11.0	7.7	132M/6A	46.5	82.2	108.5	144.2	34.9	203	230	172	208	253	428-445
		320.6	2.8	8850	2.0				46.5	82.2	108.5	144.2	34.9						
		301.8	3.0	8331	1.6				46.5	82.2	108.5	144.2	34.9						
		290.4	3.1	8017	2.1				46.5	82.2	108.5	144.2	34.9						
		240.9	3.7	6650	1.9				43.5	76.9	101.5	134.9	32.6						
		230.9	3.9	6374	2.6				43.5	76.9	101.5	134.9	32.6						
		203.5	4.4	5618	2.8				43.5	76.9	101.5	134.9	32.6						
		803.9	1.7	14266	1.0				51.0	90.1	119.0	158.1	38.3						
		665.3	2.1	11807	1.2				51.0	90.1	119.0	158.1	38.3						
		551.9	2.5	9794	1.4				46.5	82.2	108.5	144.2	34.9						
		510.4	2.7	9058	1.5				46.5	82.2	108.5	144.2	34.9						
		457.4	3.1	8117	1.6				46.5	82.2	108.5	144.2	34.9						
	PLB 16004	418.9	3.3	7434	1.7	11.0	7.7	100L/4D	46.5	82.2	108.5	144.2	34.9	180	207	149	185	230	428-445
		379.5	3.7	6735	1.9				43.5	76.9	101.5	134.9	32.6						
		347.5	4.0	6167	2.0				43.5	76.9	101.5	134.9	32.6						
		320.6	4.4	5689	2.8				43.5	76.9	101.5	134.9	32.6						
		301.8	4.6	5356	2.3				40.5	71.6	94.5	125.6	30.4						
		240.9	5.8	4275	2.7				36.0	63.6	84.0	111.6	27.0						
		969.0	2.9	8598	1.2				46.5	82.2	108.5	144.2	34.9						
		803.9	3.5	7133	1.8				46.5	82.2	108.5	144.2	34.9						
	PLB 16004	665.3	4.2	5903	2.1	11.0	7.7	100L/2C	43.5	76.9	101.5	134.9	32.6	180	207	149	185	230	428-445
		551.9	5.1	4897	2.4				40.5	71.6	94.5	125.6	30.4						
		510.4	5.5	4529	2.6				40.5	71.6	94.5	125.6	30.4						
		457.4	6.1	4059	2.9				36.0	63.6	84.0	111.6	27.0						
		379.5	2.4	10476	0.8				55.3	80.8	-	-	41.4						
		350.0	2.6	9662	0.8				50.4	73.6	-	-	37.8						
		320.6	2.8	8850	1.2				50.4	73.6	-	-	37.8						
		301.8	3.0	8331	1.2				50.4	73.6	-	-	37.8						
		278.4	3.2	7685	1.5				50.4	73.6	-	-	37.8						
	PLB 10004	265.9	3.4	7340	1.3	11.0	7.7	132M/6A	50.4	73.6	-	-	37.8	195	-	163	200	245	410-421
		230.9	3.9	6374	1.8				47.1	68.9	-	-	35.3						
		203.5	4.4	5618	1.7				47.1	68.9	-	-	35.3						
		184.4	4.9	5090	1.8				43.9	64.1	-	-	32.9						
		168.9	5.3	4663	2.3				43.9	64.1	-	-	32.9						
		140.1	6.4	3867	2.7				39.0	57.0	-	-	29.3						

P1 (kW)		iges	n2 (rpm)	M2 (Nm)	fs	Pt (20°C) (kW)	Pt (40°C) (kW)	Motor IE2	FR (kN)					~ kg					mm
									MC	MS	PC	PS	CPC	M...	P...	F	FS	CPC	
3.00	PLB 10004	551.9	2.5	9794	0.8	11.0	7.7	100L/4D	50.4	73.6	-	-	37.8	172	-	140	177	222	410-421
		510.4	2.7	9058	0.9				50.4	73.6	-	-	37.8						
		457.4	3.1	8117	1.0				50.4	73.6	-	-	37.8						
		418.9	3.3	7434	1.0				50.4	73.6	-	-	37.8						
		379.5	3.7	6735	1.1				47.1	68.9	-	-	35.3						
		350.0	4.0	6211	1.2				47.1	68.9	-	-	35.3						
		320.6	4.4	5689	1.7				47.1	68.9	-	-	35.3						
		301.8	4.6	5356	1.8				43.9	64.1	-	-	32.9						
		278.4	5.0	4941	2.2				43.9	64.1	-	-	32.9						
		265.9	5.3	4719	1.9				43.9	64.1	-	-	32.9						
		230.9	6.1	4098	2.6				39.0	57.0	-	-	29.3						
		203.5	6.9	3611	2.4				37.4	54.6	-	-	28.0						
		184.4	7.6	3272	2.7				35.8	52.3	-	-	26.8						
	PLB 10004	803.9	3.5	7133	1.1	11.0	7.7	100L/2C	50.4	73.6	-	-	37.8	172	-	140	177	222	410-421
		665.3	4.2	5903	1.3				47.1	68.9	-	-	35.3						
		551.9	5.1	4897	1.5				43.9	64.1	-	-	32.9						
		510.4	5.5	4529	1.6				43.9	64.1	-	-	32.9						
		457.4	6.1	4059	1.7				39.0	57.0	-	-	29.3						
		418.9	6.7	3717	1.8				37.4	54.6	-	-	28.0						
		379.5	7.4	3367	2.0				37.4	54.6	-	-	28.0						
		350.0	8.0	3106	2.1				35.8	52.3	-	-	26.8						
		320.6	8.7	2845	3.0				34.1	49.9	-	-	25.6						
	PLB 7004	453.0	3.1	8039	0.8	8.0	5.6	100L/4D	-	-	89.1	107.0	66.8	-	136	117	139	152	392-403
		361.7	3.9	6419	0.9				-	-	83.4	100.1	62.5						
		331.2	4.2	5878	1.0				-	-	83.4	100.1	62.5						
		300.1	4.7	5326	1.1				-	-	77.6	93.2	58.2						
		274.8	5.1	4877	1.2				-	-	77.6	93.2	58.2						
		248.4	5.6	4408	1.4				-	-	69.0	82.8	51.8						
		229.6	6.1	4075	1.3				-	-	69.0	82.8	51.8						
		210.3	6.7	3732	1.4				-	-	66.1	79.4	49.6						
		190.1	7.4	3374	1.7				-	-	66.1	79.4	49.6						
		174.1	8.0	3090	1.9				-	-	63.3	75.9	47.4						
		157.7	8.9	2799	2.0				-	-	60.4	72.5	45.3						
	PLB 7004	274.8	3.3	7586	0.8	8.0	5.6	132M/6A	-	-	89.1	107.0	66.8	-	159	140	162	175	392-403
		248.4	3.6	6857	1.0				-	-	83.4	100.1	62.5						
		229.6	3.9	6338	0.9				-	-	83.4	100.1	62.5						
		210.3	4.3	5805	1.0				-	-	83.4	100.1	62.5						
		190.1	4.7	5248	1.2				-	-	77.6	93.2	58.2						
		174.1	5.2	4806	1.3				-	-	77.6	93.2	58.2						
		157.7	5.7	4353	1.4				-	-	69.0	82.8	51.8						
	PLB 7004	717.7	3.9	6368	0.8	8.0	5.6	100L/2C	-	-	83.4	100.1	62.5	-	136	117	139	152	392-403
		656.7	4.3	5827	0.9				-	-	83.4	100.1	62.5						
		594.0	4.7	5271	1.0				-	-	77.6	93.2	58.2						
		557.0	5.0	4942	0.8				-	-	77.6	93.2	58.2						
		511.5	5.5	4539	1.1				-	-	77.6	93.2	58.2						
		453.0	6.2	4020	1.4				-	-	69.0	82.8	51.8						
		393.0	7.1	3487	1.1				-	-	66.1	79.4	49.6						
		361.7	7.7	3209	1.6				-	-	63.3	75.9	47.4						
		331.2	8.5	2939	1.8				-	-	63.3	75.9	47.4						
		300.1	9.3	2663	1.9				-	-	60.4	72.5	45.3						
		274.8	10.2	2438	2.1				-	-	57.5	69.0	43.1						
		248.4	11.3	2204	2.5				-	-	57.5	69.0	43.1						
		229.6	12.2	2037	2.4				-	-	57.5	69.0	43.1						
		210.3	13.3	1866	2.6				-	-	54.1	64.9	40.5						
	PLB 5004	220.6	4.1	6090	0.8	6.0	4.2	132M/6A	25.4	32.6	45.7	52.9	34.3	123	132	114	125	136	370-385
		184.4	4.9	5090	0.8				23.6	30.4	42.5	49.3	31.9						
		168.9	5.3	4663	1.0				23.6	30.4	42.5	49.3	31.9						
		140.1	6.4	3867	1.1				21.0	27.0	37.8	43.8	28.4						
	PLB 5004	320.6	4.4	5689	0.8	6.0	4.2	100L/4D	25.4	32.6	45.7	52.9	34.3	100	109	91	102	113	370-385
		290.4	4.8	5154	0.8				23.6	30.4	42.5	49.3	31.9						
		265.9	5.3	4719	0.9				23.6	30.4	42.5	49.3	31.9						
		240.9	5.8	4275	0.9				21.0	27.0	37.8	43.8	28.4						
		220.6	6.3	3915	1.1				21.0	27.0	37.8	43.8	28.4						
		184.4	7.6	3272	1.2				19.3	24.8	34.7	40.2	26.0						
		168.9	8.3	2997	1.4				19.3	24.8	34.7	40.2	26.0						
		140.1	10.0	2486	1.6				17.5	22.5	31.5	36.5	23.6						

P1 (kW)		iges	n2 (rpm)	M2 (Nm)	fs	Pt (20°C) (kW)	Pt (40°C) (kW)	Motor IE2	FR (kN)					~ Kg					mm
									MC	MS	PC	PS	CPC	M...	P...	F	FS	CPC	
3.00	PLB 5004	475.3	5.9	4217	0.8	6.0	4.2	100L/2C	21.0	27.0	37.8	43.8	28.4	100	109	91	102	113	370-385
		449.4	6.2	3988	1.0				21.0	27.0	37.8	43.8	28.4						
		422.4	6.6	3748	0.8				20.1	25.9	36.2	42.0	27.2						
		350.0	8.0	3106	1.2				19.3	24.8	34.7	40.2	26.0						
		320.6	8.7	2845	1.4				18.4	23.6	33.1	38.3	24.8						
		290.4	9.6	2577	1.4				17.5	22.5	31.5	36.5	23.6						
		265.9	10.5	2359	1.7				17.5	22.5	31.5	36.5	23.6						
		240.9	11.6	2138	1.7				17.5	22.5	31.5	36.5	23.6						
		220.6	12.7	1957	2.0				16.5	21.2	29.6	34.3	22.2						
		184.4	15.2	1636	2.1				16.5	21.2	29.6	34.3	22.2						
		168.9	16.6	1499	2.5				16.5	21.2	29.6	34.3	22.2						
		140.1	20.0	1243	2.8				14.5	18.7	26.1	30.3	19.6						
	PLB 2504	220.6	6.3	3915	0.8	4.0	2.8	100L/4D	21.0	27.0	37.8	43.8	28.4	94	103	85	96	107	348-363
		184.4	7.6	3272	0.8				19.3	24.8	34.7	40.2	26.0						
		168.9	8.3	2997	1.0				19.3	24.8	34.7	40.2	26.0						
		140.1	10.0	2486	1.1				17.5	22.5	31.5	36.5	23.6						
	PLB 2504	140.1	6.4	3867	0.8	4.0	2.8	132M/6A	21.0	27.0	37.8	43.8	28.4	117	126	108	119	130	348-363
	PLB 2504	350.0	8.0	3106	0.8	4.0	2.8	100L/2C	19.3	24.8	34.7	40.2	26.0	94	103	85	96	107	348-363
		320.6	8.7	2845	1.0				18.4	23.6	33.1	38.3	24.8						
		290.4	9.6	2577	1.0				17.5	22.5	31.5	36.5	23.6						
		265.9	10.5	2359	1.2				17.5	22.5	31.5	36.5	23.6						
		240.9	11.6	2138	1.2				17.5	22.5	31.5	36.5	23.6						
		220.6	12.7	1957	1.4				16.5	21.2	29.6	34.3	22.2						
		184.4	15.2	1636	1.4				16.5	21.2	29.6	34.3	22.2						
		168.9	16.6	1499	1.7				16.5	21.2	29.6	34.3	22.2						
		140.1	20.0	1243	2.0				14.5	18.7	26.1	30.3	19.6						
	PLB 1604	158.9	17.6	1410	0.9	1.5	1.1	100L/2C	4.6	5.6	10.0	12.5	7.5	77	79	75	78	82	326-340
		131.8	21.2	1169	1.0				4.6	5.6	10.0	12.5	7.5						
	PLB 25003	238.2	3.8	6814	2.5	20.0	14.0	132M/6A	65.3	99.3	-	-	48.9	306	-	270	278	369	476-489
		197.4	4.6	5647	2.9				60.8	92.5	-	-	45.6						
	PLB 18003	163.3	5.5	4671	2.9	17.0	11.9	132M/6A	36.0	63.6	84.0	111.6	27.0	226	253	195	231	276	452-469
	PLB 16003	266.4	3.4	7621	1.1	15.0	10.5	132M/6A	46.5	82.2	108.5	144.2	34.9	220	247	189	225	270	428-445
		221.0	4.1	6322	1.7				43.5	76.9	101.5	134.9	32.6						
		182.9	4.9	5232	2.0				40.5	71.6	94.5	125.6	30.4						
		157.5	5.7	4506	2.3				36.0	63.6	84.0	111.6	27.0						
		125.8	7.2	3599	2.8				34.5	61.0	80.5	107.0	25.9						
		116.1	7.8	3321	3.0				33.0	58.3	77.0	102.3	24.8						
	PLB 16003	266.4	5.3	4899	1.6	15.0	10.5	100L/4D	40.5	71.6	94.5	125.6	30.4	197	224	166	202	247	428-445
		221.0	6.3	4064	2.5				36.0	63.6	84.0	111.6	27.0						
		182.9	7.7	3364	2.9				33.0	58.3	77.0	102.3	24.8						
	PLB 16003	266.4	10.5	2450	2.9	15.0	10.5	100L/2C	30.0	53.0	70.0	93.0	22.5	197	224	166	202	247	428-445
	PLB 10003	266.4	3.4	7621	0.8	15.0	10.5	132M/6A	50.4	73.6	-	-	37.8	212	-	180	217	262	410-421
		221.0	4.1	6322	1.2				47.1	68.9	-	-	35.3						
		182.9	4.9	5232	1.4				43.9	64.1	-	-	32.9						
		157.5	5.7	4506	1.6				39.0	57.0	-	-	29.3						
		140.0	6.4	4005	2.2				39.0	57.0	-	-	29.3						
		125.8	7.2	3599	1.9				37.4	54.6	-	-	28.0						
		120.6	7.5	3450	2.5				37.4	54.6	-	-	28.0						
		116.1	7.8	3321	2.0				35.8	52.3	-	-	26.8						
		96.2	9.4	2752	3.0				34.1	49.9	-	-	25.6						
	PLB 10003	266.4	5.3	4899	1.1	15.0	10.5	100L/4D	43.9	64.1	-	-	32.9	189	-	157	194	239	410-421
		221.0	6.3	4064	1.7				39.0	57.0	-	-	29.3						
		182.9	7.7	3364	2.0				35.8	52.3	-	-	26.8						
		157.5	8.9	2896	2.2				34.1	49.9	-	-	25.6						
		125.8	11.1	2313	2.8				32.5	47.5	-	-	24.4						
		116.1	12.1	2135	2.9				32.5	47.5	-	-	24.4						
	PLB 10003	266.4	10.5	2450	2.0	15.0	10.5	100L/2C	32.5	47.5	-	-	24.4	189	-	157	194	239	410-421
	PLB 7003	148.9	6.0	4260	0.8	14.0	9.8	132M/6A	-	-	69.0	82.8	51.8	-	152	134	155	169	392-403
		123.3	7.3	3527	1.1				-	-	66.1	79.4	49.6						
		106.3	8.5	3041	1.5				-	-	63.3	75.9	47.4						
		94.2	9.6	2695	1.9				-	-	57.5	69.0	43.1						
		88.0	10.2	2517	1.8				-	-	57.5	69.0	43.1						
		77.9	11.6	2228	2.2				-	-	57.5	69.0	43.1						
		67.1	13.4	1919	2.5				-	-	54.1	64.9	40.5						
		60.5	14.9	1731	2.4				-	-	54.1	64.9	40.5						
		55.6	16.2	1591	2.9				-	-	54.1	64.9	40.5						
		53.6	16.8	1533	3.0				-	-	54.1	64.9	40.5						

P1 (kW)		iges	n2 (rpm)	M2 (Nm)	fs	Pt (20°C) (kW)	Pt (40°C) (kW)	Motor IE2	FR (kN)					~ Kg					mm
									MC	MS	PC	PS	CPC	M...	P...	F	FS	CPC	
3.00	PLB 7003	148.9	9.4	2738	1.1	14.0	9.8	100L/4D	-	-	60.4	72.5	45.3	-	129	111	132	146	392-403
		123.3	11.4	2267	1.6				-	-	57.5	69.0	43.1						
		106.3	13.2	1955	2.2				-	-	54.1	64.9	40.5						
		94.2	14.9	1732	2.7				-	-	54.1	64.9	40.5						
		88.0	15.9	1618	2.5				-	-	54.1	64.9	40.5						
	PLB 7003	148.9	18.8	1369	2.0	14.0	9.8	100L/2C	-	-	47.7	57.3	35.8	-	129	111	132	146	392-403
		123.3	22.7	1134	2.9				-	-	44.9	53.8	33.6						
	PLB 5003	118.8	7.6	3398	0.8	10.0	7.0	132M/6A	19.3	24.8	34.7	40.2	26.0	117	126	108	119	130	370-385
		102.3	8.8	2926	1.0				18.4	23.6	33.1	38.3	24.8						
		91.1	9.9	2606	0.8				17.5	22.5	31.5	36.5	23.6						
		84.9	10.6	2429	1.2				17.5	22.5	31.5	36.5	23.6						
		75.4	11.9	2157	1.2				17.5	22.5	31.5	36.5	23.6						
		67.8	13.3	1940	1.8				16.5	21.2	29.6	34.3	22.2						
		53.9	16.7	1542	1.8				16.5	21.2	29.6	34.3	22.2						
		47.5	18.9	1359	2.6				14.5	18.7	26.1	30.3	19.6						
	PLB 5003	143.5	9.8	2639	0.8	10.0	7.0	100L/4D	17.5	22.5	31.5	36.5	23.6	94	103	85	96	107	370-385
		118.8	11.8	2185	1.2				17.5	22.5	31.5	36.5	23.6						
		102.3	13.7	1881	1.5				16.5	21.2	29.6	34.3	22.2						
		91.1	15.4	1675	1.1				16.5	21.2	29.6	34.3	22.2						
		84.9	16.5	1561	1.8				16.5	21.2	29.6	34.3	22.2						
		75.4	18.6	1387	1.7				14.5	18.7	26.1	30.3	19.6						
		67.8	20.6	1247	2.6				14.5	18.7	26.1	30.3	19.6						
		53.9	26.0	991	2.6				13.7	17.6	24.6	28.5	18.4						
	PLB 5003	143.5	19.5	1319	1.4	10.0	7.0	100L/2C	14.5	18.7	26.1	30.3	19.6	94	103	85	96	107	370-385
		118.8	23.6	1092	2.1				13.7	17.6	24.6	28.5	18.4						
		102.3	27.4	941	2.7				13.7	17.6	24.6	28.5	18.4						
		91.1	30.7	838	2.0				13.0	16.7	23.3	27.0	17.5						
		75.4	37.1	693	3.0				12.3	15.8	22.1	25.6	16.5						
	PLB 2503	84.9	10.6	2429	0.9	8.0	5.6	132M/6A	17.5	22.5	31.5	36.5	23.6	111	120	103	113	124	348-363
		75.4	11.9	2157	0.8				17.5	22.5	31.5	36.5	23.6						
		67.8	13.3	1940	1.2				16.5	21.2	29.6	34.3	22.2						
		53.9	16.7	1542	1.2				16.5	21.2	29.6	34.3	22.2						
		47.5	18.9	1359	1.8				14.5	18.7	26.1	30.3	19.6						
		39.4	22.8	1127	2.1				13.7	17.6	24.6	28.5	18.4						
	PLB 2503	118.8	11.8	2185	0.8	8.0	5.6	100L/4D	17.5	22.5	31.5	36.5	23.6	88	97	80	90	101	348-363
		102.3	13.7	1881	1.1				16.5	21.2	29.6	34.3	22.2						
		91.1	15.4	1675	0.8				16.5	21.2	29.6	34.3	22.2						
		84.9	16.5	1561	1.2				16.5	21.2	29.6	34.3	22.2						
		75.4	18.6	1387	1.1				14.5	18.7	26.1	30.3	19.6						
		67.8	20.6	1247	1.8				14.5	18.7	26.1	30.3	19.6						
		53.9	26.0	991	1.8				13.7	17.6	24.6	28.5	18.4						
		47.5	29.5	874	2.7				13.0	16.7	23.3	27.0	17.5						
	PLB 2503	143.5	19.5	1319	0.9	8.0	5.6	100L/2C	14.5	18.7	26.1	30.3	19.6	88	97	80	90	101	348-363
		118.8	23.6	1092	1.4				13.7	17.6	24.6	28.5	18.4						
		102.3	27.4	941	1.9				13.7	17.6	24.6	28.5	18.4						
		91.1	30.7	838	1.3				13.0	16.7	23.3	27.0	17.5						
		84.9	33.0	781	2.2				12.3	15.8	22.1	25.6	16.5						
		75.4	37.1	693	2.0				12.3	15.8	22.1	25.6	16.5						
	PLB 1603	53.9	16.7	1542	0.8	5.0	3.5	132M/6A	5.2	6.3	11.3	14.1	8.5	94	96	92	95	99	326-340
		44.7	20.1	1279	0.9				4.6	5.6	10.0	12.5	7.5						
		37.1	24.3	1061	1.1				4.3	5.3	9.4	11.7	7.0						
	PLB 1603	84.9	16.5	1561	0.8	5.0	3.5	100L/4D	5.2	6.3	11.3	14.1	8.5	71	73	69	72	76	326-340
		70.4	19.9	1295	0.9				4.6	5.6	10.0	12.5	7.5						
		58.4	24.0	1074	1.1				4.3	5.3	9.4	11.7	7.0						
		53.9	26.0	991	1.1				4.3	5.3	9.4	11.7	7.0						
		44.7	31.3	822	1.3				4.1	5.0	8.9	11.1	6.7						
		37.1	37.7	682	1.6				3.7	4.5	8.0	10.1	6.0						
	PLB 1603	110.9	25.2	1020	0.8	5.0	3.5	100L/2C	4.3	5.3	9.4	11.7	7.0	71	73	69	72	76	326-340
		92.0	30.4	846	0.9				4.1	5.0	8.9	11.1	6.7						
		84.9	33.0	781	1.4				3.9	4.7	8.4	10.5	6.3						
		70.4	39.8	647	1.6				3.7	4.5	8.0	10.1	6.0						
		58.4	47.9	537	1.9				3.5	4.3	7.7	9.6	5.8						
		53.9	51.9	496	2.0				3.5	4.3	7.7	9.6	5.8						
		44.7	62.6	411	2.4				3.2	3.9	7.0	8.7	5.2						
		37.1	75.5	341	2.8				3.1	3.8	6.7	8.4	5.0						
	PLB 1003	44.7	31.3	822	0.9	5.0	3.5	100L/4D	4.1	5.0	8.9	11.1	6.7	69	71	67	70	74	304-318
		37.1	37.7	682	1.0				3.7	4.5	8.0	10.1	6.0						

P1 (kW)		iges	n2 (rpm)	M2 (Nm)	fs	Pt (20°C) (kW)	Pt (40°C) (kW)	Motor IE2	FR (kN)					~ Kg					mm
									MC	MS	PC	PS	CPC	M...	P...	F	FS	CPC	
3.00	PLB 1003	84.9 70.4 58.4 53.9 44.7 37.1	33.0 39.8 47.9 51.9 62.6 75.5	781 647 537 496 411 341	0.9 1.1 1.2 1.3 1.5 1.8	5.0	3.5	100L/2C	3.9 3.7 3.5 3.5 3.2 3.1	4.7 4.5 4.3 4.3 3.9 3.8	8.4 8.0 7.7 7.7 7.0 6.7	10.5 10.1 9.6 9.6 8.7 8.4	6.3 6.0 5.8 5.8 5.2 5.0	69	71	67	70	74	304-318
	PLB 7002	38.1	23.6	1129	2.3	18.0	12.6	132M/6A	-	-	44.9	53.8	33.6	-	163	144	166	179	392-403
	PLB 5002	39.5 32.7 28.1	22.8 27.5 32.0	1171 969 833	1.5 2.3 3.0	15.0	10.5	132M/6A	13.7 13.0 13.0	17.6 16.7 16.7	24.6 23.3 23.3	28.5 27.0 27.0	18.4 17.5 17.5	109	118	101	111	122	370-385
	PLB 5002	39.5	35.4	753	2.2	15.0	10.5	100L/4D	12.3	15.8	22.1	25.6	16.5	86	95	78	88	99	370-385
	PLB 2502	21.3 17.6	42.3 51.1	631 522	1.7 2.5	12.0	8.4	132M/6A	11.7 11.2	15.1 14.4	21.1 20.2	24.5 23.4	15.8 15.1	105	114	93	107	118	348-363
	PLB 2502	21.3	65.7	406	2.4	12.0	8.4	100L/4D	10.2	13.1	18.3	21.2	13.7	82	91	70	84	95	348-363
	PLB 1602	19.8 16.4 12.6 10.4	45.5 54.9 71.4 86.5	587 486 374 308	1.0 1.4 2.5 3.0	8.0	5.6	132M/6A	3.6 3.4 3.1 2.9	4.4 4.2 3.8 3.6	7.8 7.4 6.8 6.4	9.8 9.3 8.6 8.0	5.9 5.6 5.1 4.8	88	90	86	89	93	326-340
	PLB 1602	19.8 16.4	70.7 85.4	377 313	1.5 2.1	8.0	5.6	100L/4D	3.1 2.9	3.8 3.6	6.8 6.4	8.6 8.0	5.1 4.8	65	67	63	66	70	326-340
	PLB 1002	16.4 12.6 10.4	54.9 71.4 86.5	486 374 308	1.0 1.6 1.9	8.0	5.6	132M/6A	3.4 3.1 2.9	4.2 3.8 3.6	7.4 6.8 6.4	9.3 8.6 8.0	5.6 5.1 4.8	86	88	84	87	91	304-318
	PLB 1002	19.8 16.4 12.6 10.4	70.7 85.4 111.1 134.6	377 313 240 198	1.0 1.4 2.4 2.8	8.0	5.6	100L/4D	3.1 2.9 2.7 2.5	3.8 3.6 3.3 3.1	6.8 6.4 5.8 5.5	8.6 8.0 7.3 6.9	5.1 4.8 4.4 4.1	63	65	61	64	68	304-318
	PLB 1002	19.8 16.4	141.4 170.7	189 156	1.8 2.5	8.0	5.6	100L/2C	2.5 2.3	3.1 2.9	5.5 5.1	6.9 6.4	4.1 3.8	63	65	61	64	68	304-318
4.00	PLB 90004	1010.0 840.3	0.9 1.1	37175 30929	2.6 3.0	30.0	21.0	132M/6B	310.0 310.0	432.0 432.0	- -	- -	232.5 232.5	794	-	698	720	968	576-585
	PLB 65004	913.7 757.1	1.0 1.2	33631 27867	2.4 2.8	25.0	17.5	132M/6B	156.0 156.0	216.0 216.0	- -	- -	117.0 117.0	588	-	526	540	692	556-569
	PLB 50004	1598.6 1348.8 1119.0 961.2 926.1 856.4 797.5 708.7 669.0 587.6 543.4 506.3 455.5	0.6 0.7 0.8 0.9 1.0 1.1 1.1 1.3 1.3 1.5 1.7 1.8 2.0	58840 49645 41187 35379 34087 31521 29354 26085 24624 21628 20001 18635 16766	0.8 1.1 1.3 1.5 1.6 1.6 1.7 1.9 2.0 2.2 2.4 2.5 2.7	20.0	14.0	132M/6B	178.0 178.0 178.0 178.0 178.0 178.0 178.0 178.0 178.0 151.3 151.3 151.3 151.3	246.0 246.0 246.0 246.0 246.0 246.0 246.0 246.0 246.0 209.1 209.1 209.1 209.1	- - - - - - - - - - - - -	- - - - - - - - - - - - -	133.5 133.5 133.5 133.5 133.5 133.5 133.5 133.5 133.5 113.5 113.5 113.5 113.5	499	-	441	454	607	536-549
	PLB 50004	1598.6 1348.8 1119.0 961.2 926.1 856.4 797.5 708.7 669.0	0.9 1.0 1.3 1.5 1.5 1.6 1.8 2.0 2.1	37825 31915 26477 22744 21913 20264 18870 16769 15830	1.1 1.6 1.9 2.1 2.2 2.4 2.5 2.7 2.9	20.0	14.0	112M/4C	178.0 178.0 178.0 178.0 151.3 151.3 151.3 151.3 151.3	246.0 246.0 246.0 246.0 209.1 209.1 209.1 209.1 209.1	- - - - - - - - -	- - - - - - - - -	133.5 133.5 133.5 133.5 113.5 113.5 113.5 113.5 113.5	475	-	417	430	583	536-549
	PLB 50004	1598.6 1348.8	1.8 2.1	18913 15957	2.0 2.9	20.0	14.0	112M/2C	151.3 151.3	209.1 209.1	- -	- -	113.5 113.5	472	-	414	427	580	536-549
	PLB 35004	1253.8 1037.7 860.9 741.3 658.8 591.8 542.0 452.9 414.8 385.0 352.6	0.7 0.9 1.0 1.2 1.4 1.5 1.7 2.0 2.2 2.3 2.6	46149 38195 31687 27285 24248 21782 19949 16670 15268 14171 12978	0.9 1.0 1.2 1.3 1.5 1.6 1.7 2.0 2.1 2.7 2.9	17.0	11.9	132M/6B	144.0 144.0 144.0 144.0 144.0 122.4 122.4 122.4 122.4 122.4 111.6	204.0 204.0 204.0 204.0 204.0 173.4 173.4 173.4 173.4 173.4 158.1	- - - - - - - - - - -	- - - - - - - - - - -	108.0 108.0 108.0 108.0 108.0 91.8 91.8 91.8 91.8 91.8 83.7	367	-	331	339	430	516-529

P1 (kW)		iges	n2 (rpm)	M2 (Nm)	fs	Pt (20°C) (kW)	Pt (40°C) (kW)	Motor IE2	FR (kN) MC	MS	PC	PS	CPC	~ Kg M…	P…	F	FS	CPC	mm
4.00	PLB 35004	1253.8	1.1	29667	1.2	17.0	11.9	112M/4C	144.0	204.0	-	-	108.0	343	-	307	315	406	516-529
		1037.7	1.3	24554	1.4				144.0	204.0	-	-	108.0						
		860.9	1.6	20370	1.7				122.4	173.4	-	-	91.8						
		741.3	1.9	17540	1.9				122.4	173.4	-	-	91.8						
		658.8	2.1	15588	2.1				122.4	173.4	-	-	91.8						
		591.8	2.4	14003	2.3				122.4	173.4	-	-	91.8						
		542.0	2.6	12825	2.5				111.6	158.1	-	-	83.7						
		452.9	3.1	10716	2.9				111.6	158.1	-	-	83.7						
	PLB 35004	1253.8	2.2	14833	2.2	17.0	11.9	112M/2C	122.4	173.4	-	-	91.8	340	-	304	312	403	516-529
		1037.7	2.7	12277	2.6				111.6	158.1	-	-	83.7						
		860.9	3.3	10185	3.0				111.6	158.1	-	-	83.7						
	PLB 30004	951.2	0.9	35011	0.8	17.0	11.9	132M/6B	90.0	137.0	-	-	67.5	361	-	320	328	424	496-509
		819.1	1.1	30149	0.9				90.0	137.0	-	-	67.5						
		729.3	1.2	26843	1.0				90.0	137.0	-	-	67.5						
		676.7	1.3	24907	1.4				90.0	137.0	-	-	67.5						
		598.9	1.5	22044	1.2				90.0	137.0	-	-	67.5						
		519.8	1.7	19132	1.3				76.5	116.5	-	-	57.4						
		460.7	2.0	16957	1.9				76.5	116.5	-	-	57.4						
		385.0	2.3	14171	2.2				76.5	116.5	-	-	57.4						
		352.6	2.6	12978	2.4				69.8	106.2	-	-	52.3						
		306.0	2.9	11263	2.7				69.8	106.2	-	-	52.3						
	PLB 30004	1385.5	1.0	32783	0.9	17.0	11.9	112M/4C	90.0	137.0	-	-	67.5	337	-	296	304	400	496-509
		951.2	1.5	22507	1.2				90.0	137.0	-	-	67.5						
		819.1	1.7	19381	1.3				76.5	116.5	-	-	57.4						
		729.3	1.9	17256	1.4				76.5	116.5	-	-	57.4						
		676.7	2.1	16012	2.0				76.5	116.5	-	-	57.4						
		598.9	2.3	14171	1.7				76.5	116.5	-	-	57.4						
		519.8	2.7	12299	1.9				69.8	106.2	-	-	52.3						
		460.7	3.0	10901	2.7				69.8	106.2	-	-	52.3						
	PLB 30004	1385.5	2.0	16392	1.5	17.0	11.9	112M/2C	76.5	116.5	-	-	57.4	334	-	293	301	397	496-509
		951.2	2.9	11253	2.1				69.8	106.2	-	-	52.3						
		819.1	3.4	9691	2.3				69.8	106.2	-	-	52.3						
		729.3	3.8	8628	2.5				65.3	99.3	-	-	48.9						
		598.9	4.7	7085	3.0				60.8	92.5	-	-	45.6						
	PLB 25004	985.2	0.9	36262	0.8	15.0	10.5	132M/6B	90.0	137.0	-	-	67.5	330	-	294	302	393	476-489
		789.4	1.1	29055	1.2				90.0	137.0	-	-	67.5						
		731.4	1.2	26921	1.0				90.0	137.0	-	-	67.5						
		651.2	1.4	23969	1.1				90.0	137.0	-	-	67.5						
		562.6	1.6	20708	1.6				76.5	116.5	-	-	57.4						
		498.3	1.8	18341	1.8				76.5	116.5	-	-	57.4						
		449.2	2.0	16534	1.9				76.5	116.5	-	-	57.4						
		397.8	2.3	14642	2.1				76.5	116.5	-	-	57.4						
		364.3	2.5	13409	2.3				76.5	116.5	-	-	57.4						
		304.0	3.0	11189	2.7				69.8	106.2	-	-	52.3						
		285.0	3.2	10490	2.8				69.8	106.2	-	-	52.3						
	PLB 25004	1190.5	1.2	28169	1.0	15.0	10.5	112M/4C	90.0	137.0	-	-	67.5	306	-	270	278	369	476-489
		985.2	1.4	23311	1.1				90.0	137.0	-	-	67.5						
		789.4	1.8	18678	1.7				76.5	116.5	-	-	57.4						
		731.4	1.9	17306	1.4				76.5	116.5	-	-	57.4						
		651.2	2.1	15408	1.6				76.5	116.5	-	-	57.4						
		562.6	2.5	13312	2.3				76.5	116.5	-	-	57.4						
		498.3	2.8	11791	2.6				69.8	106.2	-	-	52.3						
		449.2	3.1	10629	2.8				69.8	106.2	-	-	52.3						
	PLB 25004	1726.9	1.6	20431	1.0	15.0	10.5	112M/2C	76.5	116.5	-	-	57.4	303	-	267	275	366	476-489
		1430.9	2.0	16929	1.1				76.5	116.5	-	-	57.4						
		1190.5	2.4	14085	1.7				76.5	116.5	-	-	57.4						
		985.2	2.8	11656	2.0				69.8	106.2	-	-	52.3						
		731.4	3.8	8653	2.5				65.3	99.3	-	-	48.9						
		651.2	4.3	7704	2.8				65.3	99.3	-	-	48.9						
	PLB 18004	622.5	1.4	22912	0.8	13.0	9.1	132M/6B	60.0	106.0	140.0	186.0	45.0	237	264	206	242	287	452-469
		580.7	1.5	21374	0.9				51.0	90.1	119.0	158.1	38.3						
		558.2	1.6	20546	0.8				51.0	90.1	119.0	158.1	38.3						
		500.1	1.8	18407	1.0				51.0	90.1	119.0	158.1	38.3						
		442.9	2.0	16302	1.1				51.0	90.1	119.0	158.1	38.3						
		394.3	2.3	14513	1.3				51.0	90.1	119.0	158.1	38.3						
		353.6	2.5	13015	1.4				46.5	82.2	108.5	144.2	34.9						
		323.8	2.8	11918	1.5				46.5	82.2	108.5	144.2	34.9						
		281.0	3.2	10343	1.7				46.5	82.2	108.5	144.2	34.9						
		224.4	4.0	8259	2.0				43.5	76.9	101.5	134.9	32.6						
		185.8	4.8	6839	2.3				40.5	71.6	94.5	125.6	30.4						

P1 (kW)		iges	n2 (rpm)	M2 (Nm)	fs	Pt (20°C) (kW)	Pt (40°C) (kW)	Motor IE2	FR (kN)					~ Kg					mm
									MC	MS	PC	PS	CPC	M...	P...	F	FS	CPC	
4.00		812.0	1.7	19213	0.9				51.0	90.1	119.0	158.1	38.3						
		749.1	1.9	17725	0.9				51.0	90.1	119.0	158.1	38.3						
		699.2	2.0	16544	1.0				51.0	90.1	119.0	158.1	38.3						
		622.5	2.2	14729	1.1				51.0	90.1	119.0	158.1	38.3						
		580.7	2.4	13740	1.3				51.0	90.1	119.0	158.1	38.3						
		558.2	2.5	13208	1.2				46.5	82.2	108.5	144.2	34.9						
	PLB 18004	500.1	2.8	11833	1.5	13.0	9.1	112M/4C	46.5	82.2	108.5	144.2	34.9	213	240	182	218	263	452-469
		442.9	3.2	10480	1.6				46.5	82.2	108.5	144.2	34.9						
		394.3	3.6	9330	1.8				43.5	76.9	101.5	134.9	32.6						
		353.6	4.0	8367	2.0				43.5	76.9	101.5	134.9	32.6						
		323.8	4.3	7662	2.1				43.5	76.9	101.5	134.9	32.6						
		281.0	5.0	6649	2.4				40.5	71.6	94.5	125.6	30.4						
		224.4	6.2	5310	2.9				36.0	63.6	84.0	111.6	27.0						
		981.2	2.9	11608	1.3				46.5	82.2	108.5	144.2	34.9						
		812.0	3.4	9607	1.5				46.5	82.2	108.5	144.2	34.9						
		749.1	3.7	8862	1.6				43.5	76.9	101.5	134.9	32.6						
		699.2	4.0	8272	1.7				43.5	76.9	101.5	134.9	32.6						
	PLB 18004	622.5	4.5	7365	1.9	13.0	9.1	112M/2C	43.5	76.9	101.5	134.9	32.6	210	237	179	215	260	452-469
		580.7	4.8	6870	2.3				40.5	71.6	94.5	125.6	30.4						
		558.2	5.0	6604	2.1				40.5	71.6	94.5	125.6	30.4						
		500.1	5.6	5917	2.6				36.0	63.6	84.0	111.6	27.0						
		442.9	6.3	5240	2.9				36.0	63.6	84.0	111.6	27.0						
		803.9	1.7	19022	0.8				51.0	90.1	119.0	158.1	38.3						
		665.3	2.1	15742	0.9				51.0	90.1	119.0	158.1	38.3						
		551.9	2.5	13059	1.0				46.5	82.2	108.5	144.2	34.9						
		510.4	2.7	12077	1.1				46.5	82.2	108.5	144.2	34.9						
		457.4	3.1	10823	1.2				46.5	82.2	108.5	144.2	34.9						
		418.9	3.3	9912	1.3				46.5	82.2	108.5	144.2	34.9						
	PLB 16004	379.5	3.7	8980	1.4	11.0	7.7	112M/4C	43.5	76.9	101.5	134.9	32.6	188	215	157	193	238	428-445
		347.5	4.0	8222	1.5				43.5	76.9	101.5	134.9	32.6						
		320.6	4.4	7586	2.1				43.5	76.9	101.5	134.9	32.6						
		301.8	4.6	7141	1.7				40.5	71.6	94.5	125.6	30.4						
		290.4	4.8	6871	2.3				40.5	71.6	94.5	125.6	30.4						
		240.9	5.8	5700	2.1				36.0	63.6	84.0	111.6	27.0						
		230.9	6.1	5463	2.8				36.0	63.6	84.0	111.6	27.0						
		510.4	1.8	18786	0.8				51.0	90.1	119.0	158.1	38.3						
		457.4	2.0	16836	0.8				51.0	90.1	119.0	158.1	38.3						
		418.9	2.1	15418	0.9				51.0	90.1	119.0	158.1	38.3						
		379.5	2.4	13968	1.0				51.0	90.1	119.0	158.1	38.3						
		347.5	2.6	12790	1.0				46.5	82.2	108.5	144.2	34.9						
		320.6	2.8	11800	1.5				46.5	82.2	108.5	144.2	34.9						
	PLB 16004	301.8	3.0	11108	1.2	11.0	7.7	132M/6B	46.5	82.2	108.5	144.2	34.9	212	239	181	217	262	428-445
		290.4	3.1	10689	1.6				46.5	82.2	108.5	144.2	34.9						
		240.9	3.7	8867	1.4				43.5	76.9	101.5	134.9	32.6						
		230.9	3.9	8499	1.9				43.5	76.9	101.5	134.9	32.6						
		203.5	4.4	7490	2.1				43.5	76.9	101.5	134.9	32.6						
		184.4	4.9	6787	2.3				40.5	71.6	94.5	125.6	30.4						
		168.9	5.3	6217	2.9				40.5	71.6	94.5	125.6	30.4						
		969.0	2.9	11464	0.9				46.5	82.2	108.5	144.2	34.9						
		803.9	3.5	9511	1.3				46.5	82.2	108.5	144.2	34.9						
		665.3	4.2	7871	1.6				43.5	76.9	101.5	134.9	32.6						
		551.9	5.1	6529	1.8				40.5	71.6	94.5	125.6	30.4						
	PLB 16004	510.4	5.5	6038	1.9	11.0	7.7	112M/2C	40.5	71.6	94.5	125.6	30.4	185	212	154	190	235	428-445
		457.4	6.1	5411	2.1				36.0	63.6	84.0	111.6	27.0						
		418.9	6.7	4956	2.3				34.5	61.0	80.5	107.0	25.9						
		379.5	7.4	4490	2.5				34.5	61.0	80.5	107.0	25.9						
		347.5	8.1	4111	2.7				33.0	58.3	77.0	102.3	24.8						
		301.8	9.3	3571	3.0				31.5	55.7	73.5	97.7	23.6						
		320.6	2.8	11800	0.9				50.4	73.6	-	-	37.8						
		301.8	3.0	11108	0.9				50.4	73.6	-	-	37.8						
		278.4	3.2	10247	1.1				50.4	73.6	-	-	37.8						
		265.9	3.4	9787	1.0				50.4	73.6	-	-	37.8						
	PLB 10004	230.9	3.9	8499	1.3	11.0	7.7	132M/6B	47.1	68.9	-	-	35.3	204	-	172	209	254	410-421
		203.5	4.4	7490	1.3				47.1	68.9	-	-	35.3						
		184.4	4.9	6787	1.4				43.9	64.1	-	-	32.9						
		168.9	5.3	6217	1.7				43.9	64.1	-	-	32.9						
		140.1	6.4	5157	2.0				39.0	57.0	-	-	29.3						

P1 (kW)		iges	n2 (rpm)	M2 (Nm)	fs	Pt (20°C) (kW)	Pt (40°C) (kW)	Motor IE2	FR (kN) MC	MS	PC	PS	CPC	~ Kg M…	P…	F	FS	CPC	mm
4.00	PLB 10004	418.9	3.3	9912	0.8	11.0	7.7	112M/4C	50.4	73.6	-	-	37.8	180	-	148	185	230	410-421
		379.5	3.7	8980	0.8				47.1	68.9	-	-	35.3						
		350.0	4.0	8282	0.9				47.1	68.9	-	-	35.3						
		320.6	4.4	7586	1.2				47.1	68.9	-	-	35.3						
		301.8	4.6	7141	1.3				43.9	64.1	-	-	32.9						
		278.4	5.0	6587	1.6				43.9	64.1	-	-	32.9						
		265.9	5.3	6292	1.5				43.9	64.1	-	-	32.9						
		230.9	6.1	5463	1.9				39.0	57.0	-	-	29.3						
		203.5	6.9	4815	1.8				37.4	54.6	-	-	28.0						
		184.4	7.6	4363	2.0				35.8	52.3	-	-	26.8						
		168.9	8.3	3996	2.5				35.8	52.3	-	-	26.8						
		140.1	10.0	3315	2.9				32.5	47.5	-	-	24.4						
	PLB 10004	803.9	3.5	9511	0.8	11.0	7.7	112M/2C	50.4	73.6	-	-	37.8	177	-	145	182	227	410-421
		665.3	4.2	7871	0.9				47.1	68.9	-	-	35.3						
		551.9	5.1	6529	1.1				43.9	64.1	-	-	32.9						
		510.4	5.5	6038	1.2				43.9	64.1	-	-	32.9						
		457.4	6.1	5411	1.3				39.0	57.0	-	-	29.3						
		418.9	6.7	4956	1.4				37.4	54.6	-	-	28.0						
		379.5	7.4	4490	1.5				37.4	54.6	-	-	28.0						
		350.0	8.0	4141	1.6				35.8	52.3	-	-	26.8						
		320.6	8.7	3793	2.2				34.1	49.9	-	-	25.6						
		301.8	9.3	3571	2.3				34.1	49.9	-	-	25.6						
		278.4	10.1	3294	2.9				32.5	47.5	-	-	24.4						
		265.9	10.5	3146	2.6				32.5	47.5	-	-	24.4						
	PLB 7004	157.7	4.7	6997	0.9	8.0	5.6	132M/6B	-	-	77.6	93.2	58.2	-	168	149	171	184	392-403
		174.1	5.2	6408	1.0						77.6	93.2	58.2						
		190.1	5.7	5804	1.0						69.0	82.8	51.8						
	PLB 7004	300.1	4.7	7101	0.8	8.0	5.6	112M/4C	-	-	77.6	93.2	58.2	-	144	125	147	160	392-403
		274.8	5.1	6502	0.9				-	-	77.6	93.2	58.2						
		248.4	5.6	5878	1.0				-	-	69.0	82.8	51.8						
		229.6	6.1	5433	1.0				-	-	69.0	82.8	51.8						
		210.3	6.7	4976	1.1				-	-	66.1	79.4	49.6						
		190.1	7.4	4498	1.3				-	-	66.1	79.4	49.6						
		174.1	8.0	4119	1.4				-	-	63.3	75.9	47.4						
		157.7	8.9	3731	1.5				-	-	60.4	72.5	45.3						
	PLB 7004	511.5	5.5	6051	0.8	8.0	5.6	112M/2C	-	-	77.6	93.2	58.2	-	141	122	144	157	392-403
		453.0	6.2	5359	1.0				-	-	69.0	82.8	51.8						
		393.0	7.1	4650	0.9				-	-	66.1	79.4	49.6						
		361.7	7.7	4279	1.2				-	-	63.3	75.9	47.4						
		331.2	8.5	3918	1.3				-	-	63.3	75.9	47.4						
		300.1	9.3	3550	1.4				-	-	60.4	72.5	45.3						
		274.8	10.2	3251	1.6				-	-	57.5	69.0	43.1						
		248.4	11.3	2939	1.8				-	-	57.5	69.0	43.1						
		229.6	12.2	2716	1.8				-	-	57.5	69.0	43.1						
		210.3	13.3	2488	1.9				-	-	54.1	64.9	40.5						
		190.1	14.7	2249	2.3				-	-	54.1	64.9	40.5						
		174.1	16.1	2060	2.5				-	-	54.1	64.9	40.5						
		157.7	17.8	1866	2.7				-	-	47.7	57.3	35.8						
	PLB 5004	220.6	6.3	5220	0.8	6.0	4.2	112M/4C	21.0	27.0	37.8	43.8	28.4	108	117	99	110	121	370-385
		184.4	7.6	4363	0.9				19.3	24.8	34.7	40.2	26.0						
		168.9	8.3	3996	1.0				19.3	24.8	34.7	40.2	26.0						
		140.1	10.0	3315	1.2				17.5	22.5	31.5	36.5	23.6						
	PLB 5004	140.1	6.4	5157	0.8	6.0	4.2	132M/6B	21.0	27.0	37.8	43.8	28.4	132	141	123	134	145	370-385
	PLB 5004	350.0	8.0	4141	0.9	6.0	4.2	112M/2C	19.3	24.8	34.7	40.2	26.0	105	114	96	107	118	370-385
		320.6	8.7	3793	1.1				18.4	23.6	33.1	38.3	24.8						
		290.4	9.6	3436	1.1				17.5	22.5	31.5	36.5	23.6						
		265.9	10.5	3146	1.3				17.5	22.5	31.5	36.5	23.6						
		240.9	11.6	2850	1.3				17.5	22.5	31.5	36.5	23.6						
		220.6	12.7	2610	1.5				16.5	21.2	29.6	34.3	22.2						
		184.4	15.2	2182	1.6				16.5	21.2	29.6	34.3	22.2						
		168.9	16.6	1998	1.9				16.5	21.2	29.6	34.3	22.2						
		140.1	20.0	1657	2.1				14.5	18.7	26.1	30.3	19.6						
	PLB 2504	140.1	10.0	3315	0.8	4.0	2.8	112M/4C	17.5	22.5	31.5	36.5	23.6	102	111	93	104	115	348-363
	PLB 2504	265.9	10.5	3146	0.9	4.0	2.8	112M/2C	17.5	22.5	31.5	36.5	23.6	99	108	90	101	112	348-363
		240.9	11.6	2850	0.9				17.5	22.5	31.5	36.5	23.6						
		220.6	12.7	2610	1.0				16.5	21.2	29.6	34.3	22.2						
		184.4	15.2	2182	1.1				16.5	21.2	29.6	34.3	22.2						
		168.9	16.6	1998	1.3				16.5	21.2	29.6	34.3	22.2						
		140.1	20.0	1657	1.5				14.5	18.7	26.1	30.3	19.6						
	PLB 25003	238.2	3.8	9085	1.9	20.0	14.0	132M/6B	65.3	99.3	-	-	48.9	315	-	279	287	378	476-489
		197.4	4.6	7529	2.2				60.8	92.5	-	-	45.6						
	PLB 25003	238.2	5.9	5841	2.7	20.0	14.0	112M/4C	54.0	82.2	-	-	40.5	291	-	255	263	354	476-489

P1 (kW)		iges	n2 (rpm)	M2 (Nm)	fs	Pt (20°C) (kW)	Pt (40°C) (kW)	Motor IE2	FR (kN)					~ Kg					mm
									MC	MS	PC	PS	CPC	M...	P...	F	FS	CPC	
4.00	PLB 18003	163.3	5.5	6229	2.2	17.0	11.9	132M/6B	36.0	63.6	84.0	111.6	27.0	235	262	204	240	285	452-469
		135.5	6.6	5168	2.9				34.5	61.0	80.5	107.0	25.9						
		116.7	7.7	4451	2.9				33.0	58.3	77.0	102.3	24.8						
	PLB 16003	266.4	3.4	10161	0.8	15.0	10.5	132M/6B	46.5	82.2	108.5	144.2	34.9	229	256	198	234	279	428-445
		221.0	4.1	8429	1.3				43.5	76.9	101.5	134.9	32.6						
		182.9	4.9	6976	1.5				40.5	71.6	94.5	125.6	30.4						
		157.5	5.7	6007	1.7				36.0	63.6	84.0	111.6	27.0						
		140.0	6.4	5340	2.5				36.0	63.6	84.0	111.6	27.0						
		125.8	7.2	4798	2.1				34.5	61.0	80.5	107.0	25.9						
		120.6	7.5	4600	2.8				34.5	61.0	80.5	107.0	25.9						
		116.1	7.8	4428	2.2				33.0	58.3	77.0	102.3	24.8						
	PLB 16003	266.4	5.3	6532	1.2	15.0	10.5	112M/4C	40.5	71.6	94.5	125.6	30.4	205	232	174	210	255	428-445
		221.0	6.3	5419	1.9				36.0	63.6	84.0	111.6	27.0						
		182.9	7.7	4485	2.2				33.0	58.3	77.0	102.3	24.8						
		157.5	8.9	3862	2.5				31.5	55.7	73.5	97.7	23.6						
		125.8	11.1	3085	3.0				30.0	53.0	70.0	93.0	22.5						
	PLB 16003	266.4	10.5	3266	2.2	15.0	10.5	112M/2C	30.0	53.0	70.0	93.0	22.5	202	229	171	207	252	428-445
	PLB 10003	221.0	4.1	8429	0.9	15.0	10.5	132M/6B	47.1	68.9	-	-	35.3	221	-	189	226	271	410-421
		182.9	4.9	6976	1.0				43.9	64.1	-	-	32.9						
		157.5	5.7	6007	1.2				39.0	57.0	-	-	29.3						
		140.0	6.4	5340	1.7				39.0	57.0	-	-	29.3						
		125.8	7.2	4798	1.4				37.4	54.6	-	-	28.0						
		120.6	7.5	4600	1.9				37.4	54.6	-	-	28.0						
		116.1	7.8	4428	1.5				35.8	52.3	-	-	26.8						
		96.2	9.4	3669	2.3				34.1	49.9	-	-	25.6						
		88.8	10.1	3387	2.5				32.5	47.5	-	-	24.4						
	PLB 10003	266.4	5.3	6532	0.8	15.0	10.5	112M/4C	43.9	64.1	-	-	32.9	197	-	165	202	247	410-421
		221.0	6.3	5419	1.3				39.0	57.0	-	-	29.3						
		182.9	7.7	4485	1.5				35.8	52.3	-	-	26.8						
		157.5	8.9	3862	1.7				34.1	49.9	-	-	25.6						
		140.0	10.0	3433	2.4				32.5	47.5	-	-	24.4						
		125.8	11.1	3085	2.1				32.5	47.5	-	-	24.4						
		120.6	11.6	2957	2.7				32.5	47.5	-	-	24.4						
		116.1	12.1	2847	2.2				32.5	47.5	-	-	24.4						
	PLB 10003	266.4	10.5	3266	1.5	15.0	10.5	112M/2C	32.5	47.5	-	-	24.4	194	-	162	199	244	410-421
		221.0	12.7	2709	2.3				30.6	44.7	-	-	22.9						
		182.9	15.3	2242	2.7				30.6	44.7	-	-	22.9						
		157.5	17.8	1931	3.0				27.0	39.4	-	-	20.2						
	PLB 7003	123.3	7.3	4703	0.8	14.0	9.8	132M/6B	-	-	66.1	79.4	49.6	-	161	143	164	178	392-403
		106.3	8.5	4054	1.1				-	-	63.3	75.9	47.4						
		94.2	9.6	3593	1.4				-	-	57.5	69.0	43.1						
		88.0	10.2	3356	1.3				-	-	57.5	69.0	43.1						
		77.9	11.6	2971	1.7				-	-	57.5	69.0	43.1						
		67.1	13.4	2559	1.9				-	-	54.1	64.9	40.5						
		60.5	14.9	2308	1.8				-	-	54.1	64.9	40.5						
		55.6	16.2	2121	2.2				-	-	54.1	64.9	40.5						
		53.6	16.8	2044	2.3				-	-	54.1	64.9	40.5						
	PLB 7003	148.9	9.4	3651	0.8	14.0	9.8	112M/4C	-	-	60.4	72.5	45.3	-	137	119	140	154	392-403
		123.3	11.4	3023	1.2				-	-	57.5	69.0	43.1						
		106.3	13.2	2606	1.6				-	-	54.1	64.9	40.5						
		94.2	14.9	2310	2.1				-	-	54.1	64.9	40.5						
		88.0	15.9	2158	1.9				-	-	54.1	64.9	40.5						
		77.9	18.0	1910	2.4				-	-	47.7	57.3	35.8						
		67.1	20.9	1645	2.7				-	-	47.7	57.3	35.8						
		60.5	23.1	1483	2.6				-	-	44.9	53.8	33.6						
	PLB 7003	148.9	18.8	1826	1.5	14.0	9.8	112M/2C	-	-	47.7	57.3	35.8	-	134	116	137	151	392-403
		123.3	22.7	1512	2.1				-	-	44.9	53.8	33.6						
		106.3	26.3	1303	2.9				-	-	44.9	53.8	33.6						
	PLB 5003	102.3	8.8	3902	0.8	10.0	7.0	132M/6B	18.4	23.6	33.1	38.3	24.8	126	135	117	128	139	370-385
		84.9	10.6	3238	0.9				17.5	22.5	31.5	36.5	23.6						
		75.4	11.9	2876	0.9				17.5	22.5	31.5	36.5	23.6						
		67.8	13.3	2586	1.4				16.5	21.2	29.6	34.3	22.2						
		53.9	16.7	2056	1.3				16.5	21.2	29.6	34.3	22.2						
		47.5	18.9	1812	2.0				14.5	18.7	26.1	30.3	19.6						
		39.4	22.8	1503	2.3				13.7	17.6	24.6	28.5	18.4						
	PLB 5003	118.8	11.8	2913	0.9	10.0	7.0	112M/4C	17.5	22.5	31.5	36.5	23.6	102	111	93	104	115	370-385
		102.3	13.7	2508	1.1				16.5	21.2	29.6	34.3	22.2						
		91.1	15.4	2234	0.9				16.5	21.2	29.6	34.3	22.2						
		84.9	16.5	2082	1.3				16.5	21.2	29.6	34.3	22.2						
		75.4	18.6	1849	1.3				14.5	18.7	26.1	30.3	19.6						
		67.8	20.6	1662	1.9				14.5	18.7	26.1	30.3	19.6						
		53.9	26.0	1322	1.9				13.7	17.6	24.6	28.5	18.4						
		47.5	29.5	1165	2.9				13.0	16.7	23.3	27.0	17.5						

P1 (kW)		iges	n2 (rpm)	M2 (Nm)	fs	Pt (20°C) (kW)	Pt (40°C) (kW)	Motor IE2	FR (kN)					~ Kg					mm
									MC	MS	PC	PS	CPC	M...	P...	F	FS	CPC	
4.00	PLB 5003	143.5	19.5	1759	1.0	10.0	7.0	112M/2C	14.5	18.7	26.1	30.3	19.6	99	108	90	101	112	370-385
		118.8	23.6	1456	1.5				13.7	17.6	24.6	28.5	18.4						
		102.3	27.4	1254	2.0				13.7	17.6	24.6	28.5	18.4						
		91.1	30.7	1117	1.5				13.0	16.7	23.3	27.0	17.5						
		84.9	33.0	1041	2.4				12.3	15.8	22.1	25.6	16.5						
		75.4	37.1	924	2.3				12.3	15.8	22.1	25.6	16.5						
	PLB 2503	67.8	13.3	2586	0.9	8.0	5.6	132M/6B	16.5	21.2	29.6	34.3	22.2	120	129	112	122	133	348-363
		53.9	16.7	2056	0.9				16.5	21.2	29.6	34.3	22.2						
		47.5	18.9	1812	1.4				14.5	18.7	26.1	30.3	19.6						
		39.4	22.8	1503	1.6				13.7	17.6	24.6	28.5	18.4						
	PLB 2503	102.3	13.7	2508	0.8	8.0	5.6	112M/4C	16.5	21.2	29.6	34.3	22.2	96	105	88	98	109	348-363
		84.9	16.5	2082	0.9				16.5	21.2	29.6	34.3	22.2						
		75.4	18.6	1849	0.9				14.5	18.7	26.1	30.3	19.6						
		67.8	20.6	1662	1.3				14.5	18.7	26.1	30.3	19.6						
		53.9	26.0	1322	1.3				13.7	17.6	24.6	28.5	18.4						
		47.5	29.5	1165	2.0				13.0	16.7	23.3	27.0	17.5						
		39.4	35.5	966	2.3				12.3	15.8	22.1	25.6	16.5						
	PLB 2503	118.8	23.6	1456	1.0	8.0	5.6	112M/2C	13.7	17.6	24.6	28.5	18.4	93	102	85	95	106	348-363
		102.3	27.4	1254	1.4				13.7	17.6	24.6	28.5	18.4						
		91.1	30.7	1117	1.0				13.0	16.7	23.3	27.0	17.5						
		84.9	33.0	1041	1.7				12.3	15.8	22.1	25.6	16.5						
		75.4	37.1	924	1.5				12.3	15.8	22.1	25.6	16.5						
		67.8	41.3	831	2.4				11.7	15.1	21.1	24.5	15.8						
		53.9	51.9	661	2.4				11.2	14.4	20.2	23.4	15.1						
	PLB 1603	58.4	24.0	1432	0.8	5.0	3.5	112M/4C	4.3	5.3	9.4	11.7	7.0	79	81	77	80	84	326-340
		53.9	26.0	1322	0.9				4.3	5.3	9.4	11.7	7.0						
		44.7	31.3	1096	1.0				4.1	5.0	8.9	11.1	6.7						
		37.1	37.7	910	1.2				3.7	4.5	8.0	10.1	6.0						
	PLB 1603	37.1	24.3	1415	0.8	5.0	3.5	132M/6B	4.3	5.3	9.4	11.7	7.0	103	105	101	104	108	326-340
	PLB 1603	84.9	33.0	1041	1.1	5.0	3.5	112M/2C	3.9	4.7	8.4	10.5	6.3	76	78	74	77	81	326-340
		70.4	39.8	863	1.2				3.7	4.5	8.0	10.1	6.0						
		58.4	47.9	716	1.4				3.5	4.3	7.7	9.6	5.8						
		53.9	51.9	661	1.5				3.5	4.3	7.7	9.6	5.8						
		44.7	62.6	548	1.8				3.2	3.9	7.0	8.7	5.2						
		37.1	75.5	455	2.1				3.1	3.8	6.7	8.4	5.0						
	PLB 1003	37.1	37.7	910	0.8	5.0	3.5	112M/4C	3.7	4.5	8.0	10.1	6.0	77	79	75	78	82	304-318
	PLB 1003	70.4	39.8	863	0.8	5.0	3.5	112M/2C	3.7	4.5	8.0	10.1	6.0	74	76	72	75	79	304-318
		58.4	47.9	716	0.9				3.5	4.3	7.7	9.6	5.8						
		53.9	51.9	661	1.0				3.5	4.3	7.7	9.6	5.8						
		44.7	62.6	548	1.1				3.2	3.9	7.0	8.7	5.2						
		37.1	75.5	455	1.3				3.1	3.8	6.7	8.4	5.0						
	PLB 10002	36.7	24.5	1451	2.9	23.0	16.1	132M/6B	25.4	37.1	-	-	19.0	202	-	170	207	252	410-421
	PLB 7002	38.1	23.6	1506	1.7	18.0	12.6	132M/6B	-	-	44.9	53.8	33.6	-	172	153	175	188	392-403
		31.6	28.5	1249	2.5				-	-	42.6	51.1	31.9						
	PLB 7002	38.1	36.7	968	2.5	18.0	12.6	112M/4C	-	-	40.3	48.3	30.2	-	148	129	151	164	392-403
	PLB 5002	39.5	22.8	1561	1.1	15.0	10.5	132M/6B	13.7	17.6	24.6	28.5	18.4	118	127	110	120	131	370-385
		32.7	27.5	1292	1.7				13.0	16.7	23.3	27.0	17.5						
		28.1	32.0	1111	2.2				13.0	16.7	23.3	27.0	17.5						
	PLB 5002	39.5	35.4	1004	1.7	15.0	10.5	112M/4C	12.3	15.8	22.1	25.6	16.5	94	103	86	96	107	370-385
		32.7	42.8	831	2.5				11.4	14.6	20.5	23.7	15.4						
	PLB 5002	39.5	70.9	502	2.9	15.0	10.5	112M/2C	10.0	12.8	18.0	20.8	13.5	91	100	83	93	104	370-385
	PLB 2502	21.3	65.7	541	1.8	12.0	8.4	112M/4C	10.2	13.1	18.3	21.2	13.7	90	99	78	92	103	348-363
		17.6	79.5	447	2.7				9.5	12.2	17.0	19.7	12.8						
	PLB 2502	21.3	42.3	842	1.3	12.0	8.4	132M/6B	11.7	15.1	21.1	24.5	15.8	114	123	102	116	127	348-363
		17.6	51.1	696	1.9				11.2	14.4	20.2	23.4	15.1						
		15.2	59.2	601	2.5				10.3	13.3	18.6	21.5	13.9						
	PLB 1602	19.8	45.5	783	0.8	8.0	5.6	132M/6B	3.6	4.4	7.8	9.8	5.9	97	99	95	98	102	326-340
		16.4	54.9	648	1.1				3.4	4.2	7.4	9.3	5.6						
		12.6	71.4	498	1.9				3.1	3.8	6.8	8.6	5.1						
		10.4	86.5	411	2.3				2.9	3.6	6.4	8.0	4.8						
	PLB 1602	19.8	70.7	503	1.1	8.0	5.6	112M/4C	3.1	3.8	6.8	8.6	5.1	73	75	71	74	78	326-340
		16.4	85.4	417	1.6				2.9	3.6	6.4	8.0	4.8						
		12.6	111.1	320	2.8				2.7	3.3	5.8	7.3	4.4						
	PLB 1602	19.8	141.4	252	2.0	8.0	5.6	112M/2C	2.5	3.1	5.5	6.9	4.1	70	72	68	71	75	326-340
		16.4	170.7	208	2.8				2.3	2.9	5.1	6.4	3.8						

P1 (kW)	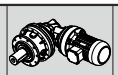	iges	n2 (rpm)	M2 (Nm)	fs	Pt (20°C) (kW)	Pt (40°C) (kW)	Motor IE2	FR (kN) MC	MS	PC	PS	CPC	~ Kg M…	P…	F	FS	CPC	mm
4.00	PLB 1002	19.8	70.7	503	0.8	8.0	5.6	112M/4C	3.1	3.8	6.8	8.6	5.1	71	73	69	72	76	304-318
		16.4	85.4	417	1.1				2.9	3.6	6.4	8.0	4.8						
		12.6	111.1	320	1.8				2.7	3.3	5.8	7.3	4.4						
		10.4	134.6	264	2.1				2.5	3.1	5.5	6.9	4.1						
	PLB 1002	12.6	71.4	498	1.2	8.0	5.6	132M/6B	3.1	3.8	6.8	8.6	5.1	95	97	93	96	100	304-318
		10.4	86.5	411	1.5				2.9	3.6	6.4	8.0	4.8						
	PLB 1002	19.8	141.4	252	1.4	8.0	5.6	112M/2C	2.5	3.1	5.5	6.9	4.1	68	70	66	69	73	304-318
		16.4	170.7	208	1.8				2.3	2.9	5.1	6.4	3.8						
5.50	PLB 90004	1010.0	0.9	51116	1.9	30.0	21.0	132M/6C	310.0	432.0	-	-	232.5	797	-	701	723	971	576-585
		840.3	1.1	42527	2.2				310.0	432.0	-	-	232.5						
		771.2	1.2	39030	2.3				310.0	432.0	-	-	232.5						
		724.4	1.2	36662	2.4				310.0	432.0	-	-	232.5						
		638.5	1.4	32314	2.7				310.0	432.0	-	-	232.5						
	PLB 90004	1010.0	1.4	32860	2.6	30.0	21.0	132M/4B	310.0	432.0	-	-	232.5	795	-	699	721	969	576-585
	PLB 65004	913.7	1.0	46242	1.8	25.0	17.5	132M/6C	156.0	216.0	-	-	117.0	591	-	529	543	695	556-569
		757.1	1.2	38317	2.0				156.0	216.0	-	-	117.0						
		629.9	1.4	31879	2.4				156.0	216.0	-	-	117.0						
		578.0	1.6	29252	2.6				132.6	183.6	-	-	99.5						
		484.5	1.9	24520	3.0				132.6	183.6	-	-	99.5						
	PLB 65004	913.7	1.5	29727	2.5	25.0	17.5	132M/4B	132.6	183.6	-	-	99.5	589	-	527	541	693	556-569
		757.1	1.8	24632	2.9				132.6	183.6	-	-	99.5						
	PLB 50004	1348.8	0.7	68262	0.8	20.0	14.0	132M/6C	178.0	246.0	-	-	133.5	502	-	444	457	610	536-549
		1119.0	0.8	56632	1.0				178.0	246.0	-	-	133.5						
		961.2	0.9	48646	1.1				178.0	246.0	-	-	133.5						
		926.1	1.0	46870	1.1				178.0	246.0	-	-	133.5						
		856.4	1.1	43342	1.2				178.0	246.0	-	-	133.5						
		797.5	1.1	40361	1.3				178.0	246.0	-	-	133.5						
		708.7	1.3	35867	1.4				178.0	246.0	-	-	133.5						
		669.0	1.3	33858	1.5				178.0	246.0	-	-	133.5						
		587.6	1.5	29738	1.6				151.3	209.1	-	-	113.5						
		543.4	1.7	27501	1.7				151.3	209.1	-	-	113.5						
		506.3	1.8	25624	1.8				151.3	209.1	-	-	113.5						
		455.5	2.0	23053	2.0				151.3	209.1	-	-	113.5						
	PLB 50004	1598.6	0.9	52010	0.8	20.0	14.0	132M/4B	178.0	246.0	-	-	133.5	500	-	442	455	608	536-549
		1348.8	1.0	43883	1.2				178.0	246.0	-	-	133.5						
		1119.0	1.3	36406	1.4				178.0	246.0	-	-	133.5						
		961.2	1.5	31272	1.6				178.0	246.0	-	-	133.5						
		926.1	1.5	30130	1.6				151.3	209.1	-	-	113.5						
		856.4	1.6	27863	1.7				151.3	209.1	-	-	113.5						
		797.5	1.8	25946	1.8				151.3	209.1	-	-	113.5						
		708.7	2.0	23057	2.0				151.3	209.1	-	-	113.5						
		669.0	2.1	21766	2.1				151.3	209.1	-	-	113.5						
		587.6	2.4	19117	2.3				151.3	209.1	-	-	113.5						
		543.4	2.6	17679	2.5				138.0	190.7	-	-	103.5						
		506.3	2.8	16472	2.6				138.0	190.7	-	-	103.5						
		455.5	3.1	14820	2.9				138.0	190.7	-	-	103.5						
	PLB 50004	1598.6	1.8	26005	1.4	20.0	14.0	132S/2C	151.3	209.1	-	-	113.5	492	-	434	447	600	536-549
		1348.8	2.1	21941	2.1				151.3	209.1	-	-	113.5						
		1119.0	2.5	18203	2.4				151.3	209.1	-	-	113.5						
		961.2	2.9	15636	2.8				138.0	190.7	-	-	103.5						
		926.1	3.0	15065	2.9				138.0	190.7	-	-	103.5						
		856.4	3.3	13931	3.0				138.0	190.7	-	-	103.5						
	PLB 35004	860.9	1.0	43570	0.9	17.0	11.9	132M/6C	144.0	204.0	-	-	108.0	370	-	334	342	433	516-529
		741.3	1.2	37517	1.0				144.0	204.0	-	-	108.0						
		658.8	1.4	33342	1.1				144.0	204.0	-	-	108.0						
		591.8	1.5	29951	1.2				122.4	173.4	-	-	91.8						
		542.0	1.7	27430	1.3				122.4	173.4	-	-	91.8						
		452.9	2.0	22921	1.4				122.4	173.4	-	-	91.8						
		414.8	2.2	20993	1.6				122.4	173.4	-	-	91.8						
		385.0	2.3	19485	1.9				122.4	173.4	-	-	91.8						
		352.6	2.6	17845	2.1				111.6	158.1	-	-	83.7						
		319.4	2.8	16165	2.3				111.6	158.1	-	-	83.7						
		292.5	3.1	14803	2.4				111.6	158.1	-	-	83.7						
		244.3	3.7	12364	2.8				104.4	147.9	-	-	78.3						
		223.7	4.0	11321	3.0				104.4	147.9	-	-	78.3						

P1 (kW)		iges	n2 (rpm)	M2 (Nm)	fs	Pt (20°C) (kW)	Pt (40°C) (kW)	Motor IE2	FR (kN) MC	MS	PC	PS	CPC	~ Kg M…	P…	F	FS	CPC	mm
5.50	PLB 35004	1253.8	1.1	40792	0.9	17.0	11.9	132M/4B	144.0	204.0	-	-	108.0	368	-	332	340	431	516-529
		1037.7	1.3	33761	1.1				144.0	204.0	-	-	108.0						
		860.9	1.6	28009	1.2				122.4	173.4	-	-	91.8						
		741.3	1.9	24118	1.4				122.4	173.4	-	-	91.8						
		658.8	2.1	21434	1.5				122.4	173.4	-	-	91.8						
		591.8	2.4	19254	1.7				122.4	173.4	-	-	91.8						
		542.0	2.6	17634	1.8				111.6	158.1	-	-	83.7						
		452.9	3.1	14735	2.1				111.6	158.1	-	-	83.7						
		414.8	3.4	13495	2.2				111.6	158.1	-	-	83.7						
		385.0	3.6	12526	2.8				104.4	147.9	-	-	78.3						
		352.6	4.0	11472	3.0				104.4	147.9	-	-	78.3						
	PLB 35004	1253.8	2.2	20396	1.6	17.0	11.9	132S/2C	122.4	173.4	-	-	91.8	360	-	324	332	423	516-529
		1037.7	2.7	16881	1.9				111.6	158.1	-	-	83.7						
		860.9	3.3	14005	2.2				111.6	158.1	-	-	83.7						
		741.3	3.8	12059	2.4				104.4	147.9	-	-	78.3						
		658.8	4.3	10717	2.7				104.4	147.9	-	-	78.3						
		591.8	4.7	9627	3.0				97.2	137.7	-	-	72.9						
	PLB 30004	676.7	1.3	34248	1.0	17.0	11.9	132M/6C	90.0	137.0	-	-	67.5	364	-	323	331	427	496-509
		598.9	1.5	30310	0.9				90.0	137.0	-	-	67.5						
		519.8	1.7	26307	1.0				76.5	116.5	-	-	57.4						
		460.7	2.0	23316	1.4				76.5	116.5	-	-	57.4						
		385.0	2.3	19485	1.6				76.5	116.5	-	-	57.4						
		352.6	2.6	17845	1.7				69.8	106.2	-	-	52.3						
		306.0	2.9	15487	1.9				69.8	106.2	-	-	52.3						
	PLB 30004	951.2	1.5	30947	0.8	17.0	11.9	132M/4B	90.0	137.0	-	-	67.5	362	-	321	329	425	496-509
		819.1	1.7	26649	1.0				76.5	116.5	-	-	57.4						
		729.3	1.9	23728	1.0				76.5	116.5	-	-	57.4						
		676.7	2.1	22016	1.4				76.5	116.5	-	-	57.4						
		598.9	2.3	19485	1.2				76.5	116.5	-	-	57.4						
		519.8	2.7	16912	1.4				69.8	106.2	-	-	52.3						
		460.7	3.0	14989	2.0				69.8	106.2	-	-	52.3						
		385.0	3.6	12526	2.3				65.3	99.3	-	-	48.9						
		352.6	4.0	11472	2.5				65.3	99.3	-	-	48.9						
		306.0	4.6	9956	2.8				60.8	92.5	-	-	45.6						
	PLB 30004	1385.5	2.0	22538	1.1	17.0	11.9	132S/2C	76.5	116.5	-	-	57.4	354	-	313	321	417	496-509
		951.2	2.9	15474	1.5				69.8	106.2	-	-	52.3						
		819.1	3.4	13325	1.7				69.8	106.2	-	-	52.3						
		729.3	3.8	11864	1.8				65.3	99.3	-	-	48.9						
		676.7	4.1	11008	2.6				65.3	99.3	-	-	48.9						
		598.9	4.7	9743	2.2				60.8	92.5	-	-	45.6						
		519.8	5.4	8456	2.4				60.8	92.5	-	-	45.6						
	PLB 25004	789.4	1.1	39951	0.9	15.0	10.5	132M/6C	90.0	137.0	-	-	67.5	333	-	297	305	396	476-489
		651.2	1.4	32957	0.8				90.0	137.0	-	-	67.5						
		562.6	1.6	28473	1.2				76.5	116.5	-	-	57.4						
		498.3	1.8	25219	1.3				76.5	116.5	-	-	57.4						
		449.2	2.0	22734	1.4				76.5	116.5	-	-	57.4						
		397.8	2.3	20132	1.6				76.5	116.5	-	-	57.4						
		364.3	2.5	18437	1.7				76.5	116.5	-	-	57.4						
		304.0	3.0	15385	1.9				69.8	106.2	-	-	52.3						
		285.0	3.2	14424	2.0				69.8	106.2	-	-	52.3						
		252.4	3.6	12774	2.2				65.3	99.3	-	-	48.9						
	PLB 25004	985.2	1.4	32053	0.8	15.0	10.5	132M/4B	90.0	137.0	-	-	67.5	331	-	295	303	394	476-489
		789.4	1.8	25683	1.3				76.5	116.5	-	-	57.4						
		731.4	1.9	23796	1.0				76.5	116.5	-	-	57.4						
		651.2	2.1	21187	1.2				76.5	116.5	-	-	57.4						
		562.6	2.5	18304	1.7				76.5	116.5	-	-	57.4						
		498.3	2.8	16212	1.9				69.8	106.2	-	-	52.3						
		449.2	3.1	14615	2.0				69.8	106.2	-	-	52.3						
		397.8	3.5	12942	2.2				65.3	99.3	-	-	48.9						
		364.3	3.8	11852	2.4				65.3	99.3	-	-	48.9						
		304.0	4.6	9891	2.8				60.8	92.5	-	-	45.6						
		285.0	4.9	9272	2.9				60.8	92.5	-	-	45.6						
	PLB 25004	1430.9	2.0	23277	0.8	15.0	10.5	132S/2C	76.5	116.5	-	-	57.4	323	-	287	295	386	476-489
		1190.5	2.4	19366	1.2				76.5	116.5	-	-	57.4						
		985.2	2.8	16027	1.5				69.8	106.2	-	-	52.3						
		789.4	3.5	12841	2.2				65.3	99.3	-	-	48.9						
		731.4	3.8	11898	1.8				65.3	99.3	-	-	48.9						
		651.2	4.3	10593	2.0				65.3	99.3	-	-	48.9						
		562.6	5.0	9152	2.9				60.8	92.5	-	-	45.6						

P1 (kW)		iges	n2 (rpm)	M2 (Nm)	fs	Pt (20°C) (kW)	Pt (40°C) (kW)	Motor IE2	FR (kN)					~ Kg					mm
									MC	MS	PC	PS	CPC	M...	P...	F	FS	CPC	
5.50	PLB 18004	442.9	2.0	22415	0.8	13.0	9.1	132M/6C	51.0	90.1	119.0	158.1	38.3	240	267	209	245	290	452-469
		394.3	2.3	19955	0.9				51.0	90.1	119.0	158.1	38.3						
		353.6	2.5	17896	1.0				46.5	82.2	108.5	144.2	34.9						
		323.8	2.8	16387	1.1				46.5	82.2	108.5	144.2	34.9						
		281.0	3.2	14221	1.2				46.5	82.2	108.5	144.2	34.9						
		224.4	4.0	11357	1.5				43.5	76.9	101.5	134.9	32.6						
		185.8	4.8	9403	1.7				40.5	71.6	94.5	125.6	30.4						
	PLB 18004	622.5	2.2	20253	0.8	13.0	9.1	132M/4B	51.0	90.1	119.0	158.1	38.3	238	265	207	243	288	452-469
		580.7	2.4	18893	1.0				51.0	90.1	119.0	158.1	38.3						
		558.2	2.5	18161	0.9				46.5	82.2	108.5	144.2	34.9						
		500.1	2.8	16271	1.1				46.5	82.2	108.5	144.2	34.9						
		442.9	3.2	14410	1.2				46.5	82.2	108.5	144.2	34.9						
		394.3	3.6	12828	1.3				43.5	76.9	101.5	134.9	32.6						
		353.6	4.0	11504	1.4				43.5	76.9	101.5	134.9	32.6						
		323.8	4.3	10535	1.5				43.5	76.9	101.5	134.9	32.6						
		281.0	5.0	9142	1.7				40.5	71.6	94.5	125.6	30.4						
		224.4	6.2	7301	2.1				36.0	63.6	84.0	111.6	27.0						
		185.8	7.5	6045	2.5				33.0	58.3	77.0	102.3	24.8						
	PLB 18004	981.2	2.9	15962	1.0	13.0	9.1	132S/2C	46.5	82.2	108.5	144.2	34.9	230	257	199	235	280	452-469
		812.0	3.4	13209	1.1				46.5	82.2	108.5	144.2	34.9						
		749.1	3.7	12186	1.2				43.5	76.9	101.5	134.9	32.6						
		699.2	4.0	11374	1.3				43.5	76.9	101.5	134.9	32.6						
		622.5	4.5	10126	1.4				43.5	76.9	101.5	134.9	32.6						
		580.7	4.8	9446	1.7				40.5	71.6	94.5	125.6	30.4						
		558.2	5.0	9080	1.5				40.5	71.6	94.5	125.6	30.4						
		500.1	5.6	8135	1.9				36.0	63.6	84.0	111.6	27.0						
		442.9	6.3	7205	2.1				36.0	63.6	84.0	111.6	27.0						
		394.3	7.1	6414	2.3				34.5	61.0	80.5	107.0	25.9						
		353.6	7.9	5752	2.6				33.0	58.3	77.0	102.3	24.8						
		323.8	8.6	5267	2.7				31.5	55.7	73.5	97.7	23.6						
	PLB 16004	551.9	2.5	17956	0.8	11.0	7.7	132M/4B	46.5	82.2	108.5	144.2	34.9	213	240	182	218	263	428-445
		510.4	2.7	16606	0.8				46.5	82.2	108.5	144.2	34.9						
		457.4	3.1	14881	0.9				46.5	82.2	108.5	144.2	34.9						
		418.9	3.3	13629	0.9				46.5	82.2	108.5	144.2	34.9						
		379.5	3.7	12347	1.0				43.5	76.9	101.5	134.9	32.6						
		347.5	4.0	11306	1.1				43.5	76.9	101.5	134.9	32.6						
		320.6	4.4	10431	1.5				43.5	76.9	101.5	134.9	32.6						
		301.8	4.6	9819	1.2				40.5	71.6	94.5	125.6	30.4						
		290.4	4.8	9448	1.7				40.5	71.6	94.5	125.6	30.4						
		240.9	5.8	7838	1.5				36.0	63.6	84.0	111.6	27.0						
		230.9	6.1	7512	2.0				36.0	63.6	84.0	111.6	27.0						
		203.5	6.9	6621	2.2				34.5	61.0	80.5	107.0	25.9						
		184.4	7.6	5999	2.4				33.0	58.3	77.0	102.3	24.8						
		168.9	8.3	5495	3.0				33.0	58.3	77.0	102.3	24.8						
	PLB 16004	347.5	2.6	17587	0.8	11.0	7.7	132M/6C	46.5	82.2	108.5	144.2	34.9	215	242	184	220	265	428-445
		320.6	2.8	16225	1.1				46.5	82.2	108.5	144.2	34.9						
		301.8	3.0	15274	0.9				46.5	82.2	108.5	144.2	34.9						
		290.4	3.1	14697	1.2				46.5	82.2	108.5	144.2	34.9						
		240.9	3.7	12192	1.0				43.5	76.9	101.5	134.9	32.6						
		230.9	3.9	11686	1.4				43.5	76.9	101.5	134.9	32.6						
		203.5	4.4	10299	1.5				43.5	76.9	101.5	134.9	32.6						
		184.4	4.9	9332	1.7				40.5	71.6	94.5	125.6	30.4						
		168.9	5.3	8548	2.1				40.5	71.6	94.5	125.6	30.4						
		140.1	6.4	7090	2.4				36.0	63.6	84.0	111.6	27.0						
	PLB 16004	803.9	3.5	13077	1.0	11.0	7.7	132S/2C	46.5	82.2	108.5	144.2	34.9	205	232	174	210	255	428-445
		665.3	4.2	10823	1.1				43.5	76.9	101.5	134.9	32.6						
		551.9	5.1	8978	1.3				40.5	71.6	94.5	125.6	30.4						
		510.4	5.5	8303	1.4				40.5	71.6	94.5	125.6	30.4						
		457.4	6.1	7441	1.6				36.0	63.6	84.0	111.6	27.0						
		418.9	6.7	6814	1.7				34.5	61.0	80.5	107.0	25.9						
		379.5	7.4	6173	1.8				34.5	61.0	80.5	107.0	25.9						
		347.5	8.1	5653	2.0				33.0	58.3	77.0	102.3	24.8						
		320.6	8.7	5215	2.7				31.5	55.7	73.5	97.7	23.6						
		301.8	9.3	4909	2.2				31.5	55.7	73.5	97.7	23.6						
		290.4	9.6	4724	3.0				30.0	53.0	70.0	93.0	22.5						
		240.9	11.6	3919	2.7				30.0	53.0	70.0	93.0	22.5						
	PLB 10004	278.4	3.2	14090	0.8	11.0	7.7	132M/6C	50.4	73.6	-	-	37.8	207	-	175	212	257	410-421
		230.9	3.9	11686	1.0				47.1	68.9	-	-	35.3						
		203.5	4.4	10299	0.9				47.1	68.9	-	-	35.3						
		184.4	4.9	9332	1.0				43.9	64.1	-	-	32.9						
		168.9	5.3	8548	1.2				43.9	64.1	-	-	32.9						
		140.1	6.4	7090	1.5				39.0	57.0	-	-	29.3						

P1 (kW)		iges	n2 (rpm)	M2 (Nm)	fs	Pt (20°C) (kW)	Pt (40°C) (kW)	Motor IE2	FR (kN) MC	MS	PC	PS	CPC	~ Kg M…	P…	F	FS	CPC	mm
5.50	PLB 10004	320.6	4.4	10431	0.9	11.0	7.7	132M/4B	47.1	68.9	-	-	35.3	205	-	173	210	255	410-421
		301.8	4.6	9819	1.0				43.9	64.1	-	-	32.9						
		278.4	5.0	9058	1.2				43.9	64.1	-	-	32.9						
		265.9	5.3	8651	1.1				43.9	64.1	-	-	32.9						
		230.9	6.1	7512	1.4				39.0	57.0	-	-	29.3						
		203.5	6.9	6621	1.3				37.4	54.6	-	-	28.0						
		184.4	7.6	5999	1.4				35.8	52.3	-	-	26.8						
		168.9	8.3	5495	1.8				35.8	52.3	-	-	26.8						
		140.1	10.0	4558	2.1				32.5	47.5	-	-	24.4						
	PLB 10004	551.9	5.1	8978	0.8	11.0	7.7	132S/2C	43.9	64.1	-	-	32.9	197	-	165	202	247	410-421
		510.4	5.5	8303	0.9				43.9	64.1	-	-	32.9						
		457.4	6.1	7441	0.9				39.0	57.0	-	-	29.3						
		418.9	6.7	6814	1.0				37.4	54.6	-	-	28.0						
		379.5	7.4	6173	1.1				37.4	54.6	-	-	28.0						
		350.0	8.0	5694	1.2				35.8	52.3	-	-	26.8						
		320.6	8.7	5215	1.6				34.1	49.9	-	-	25.6						
		301.8	9.3	4909	1.7				34.1	49.9	-	-	25.6						
		278.4	10.1	4529	2.1				32.5	47.5	-	-	24.4						
		265.9	10.5	4325	1.9				32.5	47.5	-	-	24.4						
		230.9	12.1	3756	2.5				32.5	47.5	-	-	24.4						
		203.5	13.8	3310	2.4				30.6	44.7	-	-	22.9						
		184.4	15.2	3000	2.6				30.6	44.7	-	-	22.9						
	PLB 7004	157.7	5.7	7981	0.8	8.0	5.6	132M/6C	-	-	69.0	82.8	51.8	-	171	152	174	187	392-403
	PLB 7004	210.3	6.7	6842	0.8	8.0	5.6	132M/4B	-	-	66.1	79.4	49.6	-	169	150	172	185	392-403
		190.1	7.4	6185	0.9				-	-	66.1	79.4	49.6						
		174.1	8.0	5664	1.0				-	-	63.3	75.9	47.4						
		157.7	8.9	5131	1.1				-	-	60.4	72.5	45.3						
	PLB 7004	361.7	7.7	5884	0.9	8.0	5.6	132S/2C	-	-	63.3	75.9	47.4	-	161	142	164	177	392-403
		331.2	8.5	5388	1.0				-	-	63.3	75.9	47.4						
		300.1	9.3	4882	1.0				-	-	60.4	72.5	45.3						
		274.8	10.2	4470	1.1				-	-	57.5	69.0	43.1						
		248.4	11.3	4041	1.3				-	-	57.5	69.0	43.1						
		229.6	12.2	3735	1.3				-	-	57.5	69.0	43.1						
		210.3	13.3	3421	1.4				-	-	54.1	64.9	40.5						
		190.1	14.7	3092	1.7				-	-	54.1	64.9	40.5						
		174.1	16.1	2832	1.8				-	-	54.1	64.9	40.5						
		157.7	17.8	2565	2.0				-	-	47.7	57.3	35.8						
	PLB 5004	168.9	8.3	5495	0.8	6.0	4.2	132M/4B	19.3	24.8	34.7	40.2	26.0	133	142	124	135	146	370-385
		140.1	10.0	4558	0.9				17.5	22.5	31.5	36.5	23.6						
	PLB 5004	320.6	8.7	5215	0.8	6.0	4.2	132S/2C	18.4	23.6	33.1	38.3	24.8	125	134	116	127	138	370-385
		290.4	9.6	4724	0.8				17.5	22.5	31.5	36.5	23.6						
		265.9	10.5	4325	0.9				17.5	22.5	31.5	36.5	23.6						
		240.9	11.6	3919	0.9				17.5	22.5	31.5	36.5	23.6						
		220.6	12.7	3589	1.1				16.5	21.2	29.6	34.3	22.2						
		184.4	15.2	3000	1.1				16.5	21.2	29.6	34.3	22.2						
		168.9	16.6	2748	1.3				16.5	21.2	29.6	34.3	22.2						
		140.1	20.0	2279	1.6				14.5	18.7	26.1	30.3	19.6						
	PLB 2504*	184.4	15.2	3000	0.8	4.0	2.8	132S/2C	16.5	21.2	29.6	34.3	22.2	119	128	110	121	132	348-363
		168.9	16.6	2748	0.9				16.5	21.2	29.6	34.3	22.2						
		140.1	20.0	2279	1.1				14.5	18.7	26.1	30.3	19.6						
	PLB 50003	220.5	4.1	11564	2.8	25.0	17.5	132M/6C	129.1	178.4	-	-	96.8	483	-	364	379	591	536-549
	PLB 30003	163.8	5.5	8591	2.4	23.0	16.1	132M/6C	60.8	92.5	-	-	45.6	409	-	370	380	470	496-509
		135.9	6.6	7127	2.8				51.8	78.8	-	-	38.8						
	PLB 25003	238.2	3.8	12492	1.3	20.0	14.0	132M/6C	65.3	99.3	-	-	48.9	318	-	282	290	381	476-489
		197.4	4.6	10353	1.6				60.8	92.5	-	-	45.6						
		164.2	5.5	8611	2.4				60.8	92.5	-	-	45.6						
		141.6	6.4	7426	2.7				54.0	82.2	-	-	40.5						
		125.4	7.2	6577	3.0				51.8	78.8	-	-	38.8						
	PLB 25003	238.2	5.9	8031	2.0	20.0	14.0	132M/4B	54.0	82.2	-	-	40.5	316	-	280	288	379	476-489
		197.4	7.1	6655	2.3				51.8	78.8	-	-	38.8						
	PLB 18003	163.3	5.5	8564	1.6	17.0	11.9	132M/6C	36.0	63.6	84.0	111.6	27.0	238	265	207	243	288	452-469
		135.5	6.6	7106	2.1				34.5	61.0	80.5	107.0	25.9						
		116.7	7.7	6120	2.1				33.0	58.3	77.0	102.3	24.8						
		103.3	8.7	5418	2.3				31.5	55.7	73.5	97.7	23.6						
	PLB 18003	163.3	8.6	5506	2.3	17.0	11.9	132M/4B	31.5	55.7	73.5	97.7	23.6	236	263	205	241	286	452-469

* Soğutucu gereklidir / Cooling is required / Kühlung ist erforderlich / È richiesto raffreddamento / Le refroidissement est nécessaire / Se requiere un enfriamiento

P1 (kW)		iges	n2 (rpm)	M2 (Nm)	fs	Pt (20°C) (kW)	Pt (40°C) (kW)	Motor IE2	FR (kN)					~ Kg					mm
									MC	MS	PC	PS	CPC	M...	P...	F	FS	CPC	
5.50	PLB 16003	221.0	4.1	11590	0.9	15.0	10.5	132M/6C	43.5	76.9	101.5	134.9	32.6	232	259	201	237	282	428-445
		182.9	4.9	9592	1.1				40.5	71.6	94.5	125.6	30.4						
		157.5	5.7	8260	1.3				36.0	63.6	84.0	111.6	27.0						
		140.0	6.4	7342	1.8				36.0	63.6	84.0	111.6	27.0						
		125.8	7.2	6598	1.5				34.5	61.0	80.5	107.0	25.9						
		120.6	7.5	6325	2.1				34.5	61.0	80.5	107.0	25.9						
		116.1	7.8	6089	1.6				33.0	58.3	77.0	102.3	24.8						
		96.2	9.4	5045	2.5				31.5	55.7	73.5	97.7	23.6						
		88.8	10.1	4657	2.7				30.0	53.0	70.0	93.0	22.5						
		76.5	11.8	4012	3.0				30.0	53.0	70.0	93.0	22.5						
	PLB 16003	266.4	5.3	8982	0.9	15.0	10.5	132M/4B	40.5	71.6	94.5	125.6	30.4	230	257	199	235	280	428-445
		221.0	6.3	7451	1.4				36.0	63.6	84.0	111.6	27.0						
		182.9	7.7	6166	1.6				33.0	58.3	77.0	102.3	24.8						
		157.5	8.9	5310	1.8				31.5	55.7	73.5	97.7	23.6						
		140.0	10.0	4720	2.6				30.0	53.0	70.0	93.0	22.5						
		125.8	11.1	4241	2.2				30.0	53.0	70.0	93.0	22.5						
		120.6	11.6	4066	3.0				30.0	53.0	70.0	93.0	22.5						
		116.1	12.1	3914	2.3				30.0	53.0	70.0	93.0	22.5						
	PLB 16003	266.4	10.5	4491	1.6	15.0	10.5	132S/2C	30.0	53.0	70.0	93.0	22.5	222	249	191	227	272	428-445
		221.0	12.7	3725	2.4				28.2	49.8	65.8	87.4	21.2						
		182.9	15.3	3083	2.9				28.2	49.8	65.8	87.4	21.2						
	PLB 10003	182.9	4.9	9592	0.8	15.0	10.5	132M/6C	43.9	64.1	-	-	22.9	224	-	192	229	274	410-421
		157.5	5.7	8260	0.9				39.0	57.0	-	-	24.4						
		140.0	6.4	7342	1.2				39.0	57.0	-	-	24.4						
		125.8	7.2	6598	1.0				37.4	54.6	-	-	25.6						
		120.6	7.5	6325	1.4				37.4	54.6	-	-	26.8						
		116.1	7.8	6089	1.1				35.8	52.3	-	-	28.0						
		96.2	9.4	5045	1.7				34.1	49.9	-	-	28.0						
		88.8	10.1	4657	1.8				32.5	47.5	-	-	29.3						
		73.1	12.3	3834	2.4				32.5	47.5	-	-	29.3						
		61.1	14.7	3204	2.4				30.6	44.7	-	-	32.9						
	PLB 10003	221.0	6.3	7451	0.9	15.0	10.5	132M/4B	39.0	57.0	-	-	29.3	222	-	190	227	272	410-421
		182.9	7.7	6166	1.1				35.8	52.3	-	-	26.8						
		157.5	8.9	5310	1.2				34.1	49.9	-	-	25.6						
		140.0	10.0	4720	1.8				32.5	47.5	-	-	24.4						
		125.8	11.1	4241	1.5				32.5	47.5	-	-	24.4						
		120.6	11.6	4066	2.0				32.5	47.5	-	-	24.4						
		116.1	12.1	3914	1.6				32.5	47.5	-	-	24.4						
		96.2	14.6	3243	2.4				30.6	44.7	-	-	22.9						
		88.8	15.8	2994	2.6				30.6	44.7	-	-	22.9						
	PLB 10003	266.4	10.5	4491	1.1	15.0	10.5	132S/2C	32.5	47.5	-	-	24.4	214	-	182	219	264	410-421
		221.0	12.7	3725	1.7				30.6	44.7	-	-	22.9						
		182.9	15.3	3083	1.9				30.6	44.7	-	-	22.9						
		157.5	17.8	2655	2.2				27.0	39.4	-	-	20.2						
		125.8	22.3	2121	2.6				27.0	39.4	-	-	20.2						
		116.1	24.1	1957	2.8				25.4	37.1	-	-	19.0						
	PLB 7003	106.3	8.5	5575	0.8	14.0	9.8	132M/6C	-	-	63.3	75.9	47.4	-	164	146	167	181	392-403
		94.2	9.6	4940	1.0				-	-	57.5	69.0	43.1						
		88.0	10.2	4615	1.0				-	-	57.5	69.0	43.1						
		77.9	11.6	4085	1.2				-	-	57.5	69.0	43.1						
		67.1	13.4	3519	1.4				-	-	54.1	64.9	40.5						
		60.5	14.9	3173	1.3				-	-	54.1	64.9	40.5						
		55.6	16.2	2916	1.6				-	-	54.1	64.9	40.5						
		53.6	16.8	2811	1.6				-	-	54.1	64.9	40.5						
	PLB 7003	123.3	11.4	4157	0.9	14.0	9.8	132M/4B	-	-	57.5	69.0	43.1	-	162	144	165	179	392-403
		106.3	13.2	3584	1.2				-	-	54.1	64.9	40.5						
		94.2	14.9	3176	1.5				-	-	54.1	64.9	40.5						
		88.0	15.9	2967	1.4				-	-	54.1	64.9	40.5						
		77.9	18.0	2626	1.7				-	-	47.7	57.3	35.8						
		67.1	20.9	2262	2.0				-	-	47.7	57.3	35.8						
		60.5	23.1	2040	1.9				-	-	44.9	53.8	33.6						
		55.6	25.2	1875	2.3				-	-	44.9	53.8	33.6						
		53.6	26.1	1807	2.4				-	-	44.9	53.8	33.6						
	PLB 7003	148.9	18.8	2510	1.1	14.0	9.8	132S/2C	-	-	47.7	57.3	35.8	-	154	136	157	171	392-403
		123.3	22.7	2079	1.6				-	-	44.9	53.8	33.6						
		106.3	26.3	1792	2.1				-	-	44.9	53.8	33.6						
		94.2	29.7	1588	2.6				-	-	42.6	51.1	31.9						
		88.0	31.8	1483	2.5				-	-	42.6	51.1	31.9						
	PLB 5003	67.8	13.3	3556	1.0	10.0	7.0	132M/6C	16.5	21.2	29.6	34.3	22.2	129	138	120	131	142	370-385
		53.9	16.7	2827	1.0				16.5	21.2	29.6	34.3	22.2						
		47.5	18.9	2491	1.4				14.5	18.7	26.1	30.3	19.6						
		39.4	22.8	2066	1.7				13.7	17.6	24.6	28.5	18.4						

P1 (kW)		iges	n2 (rpm)	M2 (Nm)	fs	Pt (20°C) (kW)	Pt (40°C) (kW)	Motor IE2	FR (kN) MC	MS	PC	PS	CPC	~ Kg M…	P…	F	FS	CPC	mm
5.50	PLB 5003	102.3	13.7	3449	0.8	10.0	7.0	132M/4B	16.5	21.2	29.6	34.3	22.2	127	136	118	129	140	370-385
		84.9	16.5	2862	1.0				16.5	21.2	29.6	34.3	22.2						
		75.4	18.6	2542	0.9				14.5	18.7	26.1	30.3	19.6						
		67.8	20.6	2286	1.4				14.5	18.7	26.1	30.3	19.6						
		53.9	26.0	1817	1.4				13.7	17.6	24.6	28.5	18.4						
		47.5	29.5	1601	2.1				13.0	16.7	23.3	27.0	17.5						
		39.4	35.5	1328	2.5				12.3	15.8	22.1	25.6	16.5						
	PLB 5003	143.5	19.5	2419	0.8	10.0	7.0	132S/2C	14.5	18.7	26.1	30.3	19.6	119	128	110	121	132	370-385
		118.8	23.6	2003	1.1				13.7	17.6	24.6	28.5	18.4						
		102.3	27.4	1725	1.5				13.7	17.6	24.6	28.5	18.4						
		91.1	30.7	1536	1.1				13.0	16.7	23.3	27.0	17.5						
		84.9	33.0	1431	1.7				12.3	15.8	22.1	25.6	16.5						
		75.4	37.1	1271	1.7				12.3	15.8	22.1	25.6	16.5						
		67.8	41.3	1143	2.5				11.7	15.1	21.1	24.5	15.8						
		53.9	51.9	909	2.5				11.2	14.4	20.2	23.4	15.1						
	PLB 2503	47.5	18.9	2491	1.0	8.0	5.6	132M/6C	14.5	18.7	26.1	30.3	19.6	123	132	115	125	136	348-363
		39.4	22.8	2066	1.2				13.7	17.6	24.6	28.5	18.4						
	PLB 2503	67.8	20.6	2286	1.0	8.0	5.6	132M/4B	14.5	18.7	26.1	30.3	19.6	121	130	113	123	134	348-363
		53.9	26.0	1817	1.0				13.7	17.6	24.6	28.5	18.4						
		47.5	29.5	1601	1.4				13.0	16.7	23.3	27.0	17.5						
		39.4	35.5	1328	1.7				12.3	15.8	22.1	25.6	16.5						
	PLB 2503	102.3	27.4	1725	1.0	8.0	5.6	132S/2C	13.7	17.6	24.6	28.5	18.4	113	122	105	115	126	348-363
		84.9	33.0	1431	1.2				12.3	15.8	22.1	25.6	16.5						
		75.4	37.1	1271	1.1				12.3	15.8	22.1	25.6	16.5						
		67.8	41.3	1143	1.7				11.7	15.1	21.1	24.5	15.8						
		53.9	51.9	909	1.7				11.2	14.4	20.2	23.4	15.1						
		47.5	58.9	801	2.5				10.3	13.3	18.6	21.5	13.9						
		39.4	71.1	664	3.0				10.0	12.8	18.0	20.8	13.5						
	PLB 1603*	84.9	33.0	1431	0.8	5.0	3.5	132S/2C	3.9	4.7	8.4	10.5	6.3	96	98	94	97	101	326-340
		70.4	39.8	1187	0.9				3.7	4.5	8.0	10.1	6.0						
		58.4	47.9	984	1.0				3.5	4.3	7.7	9.6	5.8						
		53.9	51.9	909	1.1				3.5	4.3	7.7	9.6	5.8						
		44.7	62.6	754	1.3				3.2	3.9	7.0	8.7	5.2						
		37.1	75.5	625	1.5				3.1	3.8	6.7	8.4	5.0						
	PLB 1603*	37.1	37.7	1251	0.9	5.0	3.5	132M/4B	3.7	4.5	8.0	10.1	6.0	104	106	102	105	109	326-340
	PLB 1003*	44.7	62.6	754	0.8	5.0	3.5	132S/2C	3.2	3.9	7.0	8.7	5.2	94	96	92	95	99	304-318
		37.1	75.5	625	1.0				3.1	3.8	6.7	8.4	5.0						
	PLB 10002	36.7	24.5	1995	2.1	23.0	16.1	132M/6C	25.4	37.1	-	-	19.0	205	-	173	210	255	410-421
	PLB 7002	38.1	23.6	2071	1.3	18.0	12.6	132M/6C	-	-	44.9	53.8	33.6	-	175	156	178	191	392-403
		31.6	28.5	1717	1.8				-	-	42.6	51.1	31.9						
		27.2	33.1	1478	2.4				-	-	40.3	48.3	30.2						
		20.0	45.0	1087	2.7				-	-	37.4	44.9	28.0						
	PLB 7002	38.1	36.7	1331	1.8	18.0	12.6	132M/4B	-	-	40.3	48.3	30.2	-	173	154	176	189	392-403
		31.6	44.3	1104	2.6				-	-	37.4	44.9	28.0						
	PLB 5002	39.5	22.8	2147	0.8	15.0	10.5	132M/6C	13.7	17.6	24.6	28.5	18.4	121	130	113	123	134	370-385
		32.7	27.5	1777	1.2				13.0	16.7	23.3	27.0	17.5						
		28.1	32.0	1527	1.6				13.0	16.7	23.3	27.0	17.5						
		22.5	40.0	1223	2.4				11.7	15.1	21.1	24.5	15.8						
		20.6	43.7	1120	2.8				11.4	14.6	20.5	23.7	15.4						
		17.8	50.6	967	2.3				11.2	14.4	20.2	23.4	15.1						
	PLB 5002	39.5	35.4	1380	1.2	15.0	10.5	132M/4B	12.3	15.8	22.1	25.6	16.5	119	128	111	121	132	370-385
		32.7	42.8	1142	1.8				11.4	14.6	20.5	23.7	15.4						
		28.1	49.8	982	2.3				11.2	14.4	20.2	23.4	15.1						
	PLB 5002	39.5	70.9	690	2.1	15.0	10.5	132S/2C	10.0	12.8	18.0	20.8	13.5	111	120	103	113	124	370-385
	PLB 2502	21.3	42.3	1158	0.9	12.0	8.4	132M/6C	11.7	15.1	21.1	24.5	15.8	117	126	105	119	130	348-363
		17.6	51.1	957	1.4				11.2	14.4	20.2	23.4	15.1						
		15.2	59.2	826	1.9				10.3	13.3	18.6	21.5	13.9						
		12.1	74.4	658	2.7				9.8	12.6	17.6	20.4	13.2						
	PLB 2502	21.3	65.7	744	1.3	12.0	8.4	132M/4B	10.2	13.1	18.3	21.2	13.7	115	124	103	117	128	348-363
		17.6	79.5	615	2.0				9.5	12.2	17.0	19.7	12.8						
		15.2	92.1	531	2.7				9.1	11.7	16.4	19.0	12.3						
	PLB 2502	21.3	131.5	372	2.3	12.0	8.4	132S/2C	8.1	10.4	14.5	16.8	10.9	107	116	95	109	120	348-363
	PLB 1602	16.4	54.9	891	0.8	8.0	5.6	132M/6C	3.4	4.2	7.4	9.3	5.6	100	102	98	101	105	326-340
		12.6	71.4	685	1.4				3.1	3.8	6.8	8.6	5.1						
		10.4	86.5	565	1.6				2.9	3.6	6.4	8.0	4.8						

* Soğutucu gereklidir / Cooling is required / Kühlung ist erforderlich / È richiesto raffreddamento / Le refroidissement est nécessaire / Se requiere un enfriamiento

P1 (kW)		iges	n2 (rpm)	M2 (Nm)	fs	Pt (20°C) (kW)	Pt (40°C) (kW)	Motor IE2	FR (kN)					~ Kg					mm
									MC	MS	PC	PS	CPC	M...	P...	F	FS	CPC	
5.50	PLB 1602	19.8	70.7	692	0.8	8.0	5.6	132M/4B	3.1	3.8	6.8	8.6	5.1	98	100	96	99	103	326-340
		16.4	85.4	573	1.1				2.9	3.6	6.4	8.0	4.8						
		12.6	111.1	440	2.0				2.7	3.3	5.8	7.3	4.4						
		10.4	134.6	363	2.3				2.5	3.1	5.5	6.9	4.1						
	PLB 1602	19.8	141.4	346	1.4	8.0	5.6	132S/2C	2.5	3.1	5.5	6.9	4.1	90	92	88	91	95	326-340
		16.4	170.7	286	2.0				2.3	2.9	5.1	6.4	3.8						
	PLB 1002	12.6	71.4	685	0.9	8.0	5.6	132M/6C	3.1	3.8	6.8	8.6	5.1	98	100	96	99	103	304-318
		10.4	86.5	565	1.1				2.9	3.6	6.4	8.0	4.8						
	PLB 1002	16.4	85.4	573	0.8	8.0	5.6	132M/4B	2.9	3.6	6.4	8.0	4.8	96	98	94	97	101	304-318
		12.6	111.1	440	1.3				2.7	3.3	5.8	7.3	4.4						
		10.4	134.6	363	1.5				2.5	3.1	5.5	6.9	4.1						
	PLB 1002	19.8	141.4	346	1.0	8.0	5.6	132S/2C	2.5	3.1	5.5	6.9	4.1	88	90	86	89	93	304-318
		16.4	170.7	286	1.3				2.3	2.9	5.1	6.4	3.8						
		12.6	222.2	220	2.3				2.2	2.7	4.9	6.1	3.6						
		10.4	269.2	182	2.7				2.1	2.6	4.6	5.8	3.5						
7.50	PLB 90004	1010.0	0.9	69703	1.4	30.0	21.0	160M/6B	310.0	432.0	-	-	232.5	839	-	743	765	1013	576-585
		840.3	1.1	57992	1.6				310.0	432.0	-	-	232.5						
		771.2	1.2	53223	1.7				310.0	432.0	-	-	232.5						
		724.4	1.2	49993	1.8				310.0	432.0	-	-	232.5						
		663.9	1.4	45818	2.4				310.0	432.0	-	-	232.5						
		638.5	1.4	44065	2.0				310.0	432.0	-	-	232.5						
		572.4	1.6	39503	2.7				263.5	367.2	-	-	197.6						
		506.9	1.8	34983	3.0				263.5	367.2	-	-	197.6						
		459.6	2.0	31718	2.6				263.5	367.2	-	-	197.6						
	PLB 90004	1010.0	1.4	44809	1.9	30.0	21.0	132M/4C	310.0	432.0	-	-	232.5	797	-	701	723	971	576-585
		840.3	1.7	37280	2.3				263.5	367.2	-	-	197.6						
		771.2	1.8	34215	2.4				263.5	367.2	-	-	197.6						
		724.4	1.9	32138	2.5				263.5	367.2	-	-	197.6						
		638.5	2.2	28327	2.8				263.5	367.2	-	-	197.6						
	PLB 65004	913.7	1.0	63057	1.3	25.0	17.5	160M/6B	156.0	216.0	-	-	117.0	633	-	571	585	737	556-569
		757.1	1.2	52250	1.5				156.0	216.0	-	-	117.0						
		629.9	1.4	43471	1.7				156.0	216.0	-	-	117.0						
		578.0	1.6	39890	1.9				132.6	183.6	-	-	99.5						
		484.5	1.9	33437	2.2				132.6	183.6	-	-	99.5						
		417.7	2.2	28827	2.5				132.6	183.6	-	-	99.5						
		399.7	2.3	27585	2.6				132.6	183.6	-	-	99.5						
		344.5	2.6	23775	2.9				120.9	167.4	-	-	90.7						
	PLB 65004	913.7	1.5	40537	1.9	25.0	17.5	132M/4C	132.6	183.6	-	-	99.5	591	-	529	543	695	556-569
		757.1	1.8	33589	2.2				132.6	183.6	-	-	99.5						
		629.9	2.2	27946	2.5				132.6	183.6	-	-	99.5						
		578.0	2.4	25643	2.7				132.6	183.6	-	-	99.5						
	PLB 50004	961.2	0.9	66335	0.8	20.0	14.0	160M/6B	178.0	246.0	-	-	133.5	544	-	486	499	652	536-549
		926.1	1.0	63913	0.8				178.0	246.0	-	-	133.5						
		856.4	1.1	59103	0.9				178.0	246.0	-	-	133.5						
		797.5	1.1	55038	0.9				178.0	246.0	-	-	133.5						
		708.7	1.3	48910	1.0				178.0	246.0	-	-	133.5						
		669.0	1.3	46170	1.1				178.0	246.0	-	-	133.5						
		587.6	1.5	40552	1.2				151.3	209.1	-	-	113.5						
		543.4	1.7	37502	1.3				151.3	209.1	-	-	113.5						
		506.3	1.8	34941	1.3				151.3	209.1	-	-	113.5						
		455.5	2.0	31435	1.5				151.3	209.1	-	-	113.5						
		395.2	2.3	27274	2.3				151.3	209.1	-	-	113.5						
		351.3	2.6	24244	2.5				138.0	190.7	-	-	103.5						
		315.8	2.8	21794	2.7				138.0	190.7	-	-	103.5						
		289.0	3.1	19945	2.9				138.0	190.7	-	-	103.5						
	PLB 50004	1348.8	1.0	59840	0.9	20.0	14.0	132M/4C	178.0	246.0	-	-	133.5	502	-	444	457	610	536-549
		1119.0	1.3	49645	1.0				178.0	246.0	-	-	133.5						
		961.2	1.5	42644	1.1				178.0	246.0	-	-	133.5						
		926.1	1.5	41087	1.2				151.3	209.1	-	-	113.5						
		856.4	1.6	37995	1.3				151.3	209.1	-	-	113.5						
		797.5	1.8	35382	1.3				151.3	209.1	-	-	113.5						
		708.7	2.0	31442	1.5				151.3	209.1	-	-	113.5						
		669.0	2.1	29681	1.5				151.3	209.1	-	-	113.5						
		587.6	2.4	26069	1.7				151.3	209.1	-	-	113.5						
		543.4	2.6	24108	1.8				138.0	190.7	-	-	103.5						
		506.3	2.8	22462	1.9				138.0	190.7	-	-	103.5						
		455.5	3.1	20209	2.1				138.0	190.7	-	-	103.5						

P1 (kW)		iges	n2 (rpm)	M2 (Nm)	fs	Pt (20°C) (kW)	Pt (40°C) (kW)	Motor IE2	FR (kN)					~ Kg					mm
									MC	MS	PC	PS	CPC	M...	P...	F	FS	CPC	
7.50	PLB 50004	1598.6	1.8	35461	1.1	20.0	14.0	132M/2A	151.3	209.1	-	-	113.5	498	-	440	453	606	536-549
		1348.8	2.1	29920	1.5				151.3	209.1	-	-	113.5						
		1119.0	2.5	24823	1.8				151.3	209.1	-	-	113.5						
		961.2	2.9	21322	2.0				138.0	190.7	-	-	103.5						
		926.1	3.0	20543	2.1				138.0	190.7	-	-	103.5						
		856.4	3.3	18997	2.2				138.0	190.7	-	-	103.5						
		797.5	3.5	17691	2.3				129.1	178.4	-	-	96.8						
		708.7	4.0	15721	2.6				129.1	178.4	-	-	96.8						
		669.0	4.2	14840	2.7				129.1	178.4	-	-	96.8						
		587.6	4.8	13035	3.0				120.2	166.1	-	-	90.1						
	PLB 35004	1037.7	1.3	46038	0.8	17.0	11.9	132M/4C	144.0	204.0	-	-	108.0	370	-	334	342	433	516-529
		860.9	1.6	38194	0.9				122.4	173.4	-	-	91.8						
		741.3	1.9	32888	1.0				122.4	173.4	-	-	91.8						
		658.8	2.1	29228	1.1				122.4	173.4	-	-	91.8						
		591.8	2.4	26256	1.2				122.4	173.4	-	-	91.8						
		542.0	2.6	24046	1.3				111.6	158.1	-	-	83.7						
		452.9	3.1	20093	1.5				111.6	158.1	-	-	83.7						
		414.8	3.4	18403	1.6				111.6	158.1	-	-	83.7						
		385.0	3.6	17081	2.0				104.4	147.9	-	-	78.3						
		352.6	4.0	15643	2.2				104.4	147.9	-	-	78.3						
		319.4	4.4	14170	2.4				104.4	147.9	-	-	78.3						
		292.5	4.8	12977	2.6				97.2	137.7	-	-	72.9						
		244.3	5.7	10839	3.0				86.4	122.4	-	-	64.8						
	PLB 35004	658.8	1.4	45466	0.8	17.0	11.9	160M/6B	144.0	204.0	-	-	108.0	412	-	376	384	475	516-529
		591.8	1.5	40842	0.9				122.4	173.4	-	-	91.8						
		542.0	1.7	37405	0.9				122.4	173.4	-	-	91.8						
		452.9	2.0	31256	1.1				122.4	173.4	-	-	91.8						
		414.8	2.2	28627	1.1				122.4	173.4	-	-	91.8						
		385.0	2.3	26570	1.4				122.4	173.4	-	-	91.8						
		352.6	2.6	24334	1.5				111.6	158.1	-	-	83.7						
		319.4	2.8	22043	1.7				111.6	158.1	-	-	83.7						
		292.5	3.1	20186	1.8				111.6	158.1	-	-	83.7						
		244.3	3.7	16860	2.1				104.4	147.9	-	-	78.3						
		223.7	4.0	15438	2.2				104.4	147.9	-	-	78.3						
		202.7	4.4	13989	2.4				104.4	147.9	-	-	78.3						
		185.6	4.8	12809	2.6				97.2	137.7	-	-	72.9						
	PLB 35004	1253.8	2.2	27813	1.2	17.0	11.9	132M/2A	122.4	173.4	-	-	91.8	366	-	330	338	429	516-529
		1037.7	2.7	23019	1.4				111.6	158.1	-	-	83.7						
		860.9	3.3	19097	1.6				111.6	158.1	-	-	83.7						
		741.3	3.8	16444	1.8				104.4	147.9	-	-	78.3						
		658.8	4.3	14614	2.0				104.4	147.9	-	-	78.3						
		591.8	4.7	13128	2.2				97.2	137.7	-	-	72.9						
		542.0	5.2	12023	2.3				97.2	137.7	-	-	72.9						
		452.9	6.2	10047	2.7				86.4	122.4	-	-	64.8						
		414.8	6.8	9201	2.9				82.8	117.3	-	-	62.1						
	PLB 30004	729.3	1.9	32356	0.8	17.0	11.9	132M/4C	76.5	116.5	-	-	57.4	364	-	323	331	427	496-509
		676.7	2.1	30022	1.1				76.5	116.5	-	-	57.4						
		598.9	2.3	26571	0.9				76.5	116.5	-	-	57.4						
		519.8	2.7	23061	1.0				69.8	106.2	-	-	52.3						
		460.7	3.0	20439	1.5				69.8	106.2	-	-	52.3						
		385.0	3.6	17081	1.7				65.3	99.3	-	-	48.9						
		352.6	4.0	15643	1.8				65.3	99.3	-	-	48.9						
		306.0	4.6	13576	2.0				60.8	92.5	-	-	45.6						
	PLB 30004	460.7	2.0	31794	1.0	17.0	11.9	160M/6B	76.5	116.5	-	-	57.4	406	-	365	373	469	496-509
		385.0	2.3	26570	1.2				76.5	116.5	-	-	57.4						
		352.6	2.6	24334	1.3				69.8	106.2	-	-	52.3						
		306.0	2.9	21118	1.4				69.8	106.2	-	-	52.3						
	PLB 30004	1385.5	2.0	30734	0.8	17.0	11.9	132M/2A	76.5	116.5	-	-	57.4	360	-	319	327	423	496-509
		951.2	2.9	21100	1.1				69.8	106.2	-	-	52.3						
		819.1	3.4	18170	1.2				69.8	106.2	-	-	52.3						
		729.3	3.8	16178	1.3				65.3	99.3	-	-	48.9						
		676.7	4.1	15011	1.9				65.3	99.3	-	-	48.9						
		598.9	4.7	13285	1.6				60.8	92.5	-	-	45.6						
		519.8	5.4	11531	1.8				60.8	92.5	-	-	45.6						
		460.7	6.1	10220	2.6				54.0	82.2	-	-	40.5						
		385.0	7.3	8540	3.0				51.8	78.8	-	-	38.8						
	PLB 25004	562.6	1.6	38827	0.9	15.0	10.5	160M/6B	76.5	116.5	-	-	57.4	375	-	339	347	438	476-489
		498.3	1.8	34389	0.9				76.5	116.5	-	-	57.4						
		449.2	2.0	31001	1.0				76.5	116.5	-	-	57.4						
		397.8	2.3	27453	1.1				76.5	116.5	-	-	57.4						
		364.3	2.5	25141	1.2				76.5	116.5	-	-	57.4						
		304.0	3.0	20980	1.4				69.8	106.2	-	-	52.3						
		285.0	3.2	19669	1.5				69.8	106.2	-	-	52.3						
		252.4	3.6	17419	1.6				65.3	99.3	-	-	48.9						

P1 (kW)		iges	n2 (rpm)	M2 (Nm)	fs	Pt (20°C) (kW)	Pt (40°C) (kW)	Motor IE2	FR (kN)					~ Kg					mm
									MC	MS	PC	PS	CPC	M...	P...	F	FS	CPC	
7.50		789.4	1.8	35022	0.9				76.5	116.5	-	-	57.4						
		731.4	1.9	32449	0.8				76.5	116.5	-	-	57.4						
		651.2	2.1	28891	0.8				76.5	116.5	-	-	57.4						
		562.6	2.5	24960	1.2				76.5	116.5	-	-	57.4						
		498.3	2.8	22107	1.4				69.8	106.2	-	-	52.3						
	PLB 25004	449.2	3.1	19929	1.5	15.0	10.5	132M/4C	69.8	106.2	-	-	52.3	333	-	297	305	396	476-489
		397.8	3.5	17649	1.6				65.3	99.3	-	-	48.9						
		364.3	3.8	16162	1.7				65.3	99.3	-	-	48.9						
		304.0	4.6	13487	2.0				60.8	92.5	-	-	45.6						
		285.0	4.9	12644	2.1				60.8	92.5	-	-	45.6						
		252.4	5.5	11198	2.4				54.0	82.2	-	-	40.5						
		1190.5	2.4	26409	0.9				76.5	116.5	-	-	57.4						
		985.2	2.8	21854	1.1				69.8	106.2	-	-	52.3						
		789.4	3.5	17511	1.6				65.3	99.3	-	-	48.9						
		731.4	3.8	16224	1.3				65.3	99.3	-	-	48.9						
	PLB 25004	651.2	4.3	14445	1.5	15.0	10.5	132M/2A	65.3	99.3	-	-	48.9	329	-	293	301	392	476-489
		562.6	5.0	12480	2.2				60.8	92.5	-	-	45.6						
		498.3	5.6	11054	2.4				54.0	82.2	-	-	40.5						
		449.2	6.2	9965	2.6				54.0	82.2	-	-	40.5						
		397.8	7.0	8824	2.9				51.8	78.8	-	-	38.8						
		323.8	2.8	22346	0.8				46.5	82.2	108.5	144.2	34.9						
	PLB 18004	281.0	3.2	19393	0.9	13.0	9.1	160M/6B	46.5	82.2	108.5	144.2	34.9	282	309	251	287	332	452-469
		224.4	4.0	15487	1.1				43.5	76.9	101.5	134.9	32.6						
		185.8	4.8	12823	1.2				40.5	71.6	94.5	125.6	30.4						
		500.1	2.8	22187	0.8				46.5	82.2	108.5	144.2	34.9						
		442.9	3.2	19650	0.9				46.5	82.2	108.5	144.2	34.9						
		394.3	3.6	17493	1.0				43.5	76.9	101.5	134.9	32.6						
	PLB 18004	353.6	4.0	15688	1.1	13.0	9.1	132M/4C	43.5	76.9	101.5	134.9	32.6	240	267	209	245	290	452-469
		323.8	4.3	14366	1.1				43.5	76.9	101.5	134.9	32.6						
		281.0	5.0	12467	1.3				40.5	71.6	94.5	125.6	30.4						
		224.4	6.2	9956	1.5				36.0	63.6	84.0	111.6	27.0						
		185.8	7.5	8243	1.8				33.0	58.3	77.0	102.3	24.8						
		812.0	3.4	18012	0.8				46.5	82.2	108.5	144.2	34.9						
		749.1	3.7	16617	0.9				43.5	76.9	101.5	134.9	32.6						
		699.2	4.0	15510	0.9				43.5	76.9	101.5	134.9	32.6						
		622.5	4.5	13809	1.0				43.5	76.9	101.5	134.9	32.6						
		580.7	4.8	12882	1.2				40.5	71.6	94.5	125.6	30.4						
		558.2	5.0	12382	1.1				40.5	71.6	94.5	125.6	30.4						
	PLB 18004	500.1	5.6	11094	1.4	13.0	9.1	132M/2A	36.0	63.6	84.0	111.6	27.0	236	263	205	241	286	452-469
		442.9	6.3	9825	1.6				36.0	63.6	84.0	111.6	27.0						
		394.3	7.1	8747	1.7				34.5	61.0	80.5	107.0	25.9						
		353.6	7.9	7844	1.9				33.0	58.3	77.0	102.3	24.8						
		323.8	8.6	7183	2.0				31.5	55.7	73.5	97.7	23.6						
		281.0	10.0	6233	2.3				30.0	53.0	70.0	93.0	22.5						
		224.4	12.5	4978	2.8				30.0	53.0	70.0	93.0	22.5						
		320.6	2.8	22126	0.8				46.5	82.2	108.5	144.2	34.9						
		290.4	3.1	20041	0.9				46.5	82.2	108.5	144.2	34.9						
		240.9	3.7	16625	0.8				43.5	76.9	101.5	134.9	32.6						
	PLB 16004	230.9	3.9	15935	1.0	11.0	7.7	160M/6B	43.5	76.9	101.5	134.9	32.6	257	284	226	262	307	428-445
		203.5	4.4	14044	1.1				43.5	76.9	101.5	134.9	32.6						
		184.4	4.9	12726	1.2				40.5	71.6	94.5	125.6	30.4						
		168.9	5.3	11656	1.5				40.5	71.6	94.5	125.6	30.4						
		140.1	6.4	9669	1.8				36.0	63.6	84.0	111.6	27.0						
		347.5	4.0	15417	0.8				43.5	76.9	101.5	134.9	32.6						
		320.6	4.4	14224	1.1				43.5	76.9	101.5	134.9	32.6						
		301.8	4.6	13390	0.9				40.5	71.6	94.5	125.6	30.4						
		290.4	4.8	12884	1.2				40.5	71.6	94.5	125.6	30.4						
	PLB 16004	240.9	5.8	10688	1.1	11.0	7.7	132M/4C	36.0	63.6	84.0	111.6	27.0	215	242	184	220	265	428-445
		230.9	6.1	10244	1.5				36.0	63.6	84.0	111.6	27.0						
		203.5	6.9	9028	1.6				34.5	61.0	80.5	107.0	25.9						
		184.4	7.6	8181	1.8				33.0	58.3	77.0	102.3	24.8						
		168.9	8.3	7493	2.2				33.0	58.3	77.0	102.3	24.8						
		140.1	10.0	6216	2.6				30.0	53.0	70.0	93.0	22.5						
		665.3	4.2	14758	0.8				43.5	76.9	101.5	134.9	32.6						
		551.9	5.1	12243	1.0				40.5	71.6	94.5	125.6	30.4						
		510.4	5.5	11322	1.0				40.5	71.6	94.5	125.6	30.4						
		457.4	6.1	10146	1.1				36.0	63.6	84.0	111.6	27.0						
		418.9	6.7	9292	1.2				34.5	61.0	80.5	107.0	25.9						
		379.5	7.4	8418	1.3				34.5	61.0	80.5	107.0	25.9						
	PLB 16004	347.5	8.1	7709	1.4	11.0	7.7	132M/2A	33.0	58.3	77.0	102.3	24.8	211	238	180	216	261	428-445
		320.6	8.7	7112	2.0				31.5	55.7	73.5	97.7	23.6						
		301.8	9.3	6695	1.6				31.5	55.7	73.5	97.7	23.6						
		290.4	9.6	6442	2.2				30.0	53.0	70.0	93.0	22.5						
		240.9	11.6	5344	2.0				30.0	53.0	70.0	93.0	22.5						
		230.9	12.1	5122	2.6				30.0	53.0	70.0	93.0	22.5						
		203.5	13.8	4514	2.9				28.2	49.8	65.8	87.4	21.2						

P1 (kW)		iges	n2 (rpm)	M2 (Nm)	fs	Pt (20°C) (kW)	Pt (40°C) (kW)	Motor IE2	FR (kN) MC	MS	PC	PS	CPC	~ Kg M…	P…	F	FS	CPC	mm
7.50	PLB 10004	278.4	5.0	12351	0.9	11.0	7.7	132M/4C	43.9	64.1	-	-	32.9	207	-	175	212	257	410-421
		265.9	5.3	11797	0.8				43.9	64.1	-	-	32.9						
		230.9	6.1	10244	1.0				39.0	57.0	-	-	29.3						
		203.5	6.9	9028	1.0				37.4	54.6	-	-	28.0						
		184.4	7.6	8181	1.1				35.8	52.3	-	-	26.8						
		168.9	8.3	7493	1.3				35.8	52.3	-	-	26.8						
		140.1	10.0	6216	1.6				32.5	47.5	-	-	24.4						
	PLB 10004	168.9	5.3	11656	0.9	11.0	7.7	160M/6B	43.9	64.1	-	-	32.9	249	-	217	254	299	410-421
		140.1	6.4	9669	1.1				39.0	57.0	-	-	29.3						
	PLB 10004	379.5	7.4	8418	0.8	11.0	7.7	132M/2A	37.4	54.6	-	-	28.0	203	-	171	208	253	410-421
		350.0	8.0	7764	0.9				35.8	52.3	-	-	26.8						
		320.6	8.7	7112	1.2				34.1	49.9	-	-	25.6						
		301.8	9.3	6695	1.2				34.1	49.9	-	-	25.6						
		278.4	10.1	6176	1.6				32.5	47.5	-	-	24.4						
		265.9	10.5	5898	1.4				32.5	47.5	-	-	24.4						
		230.9	12.1	5122	1.8				32.5	47.5	-	-	24.4						
		203.5	13.8	4514	1.7				30.6	44.7	-	-	22.9						
		184.4	15.2	4091	1.9				30.6	44.7	-	-	22.9						
		168.9	16.6	3747	2.4				30.6	44.7	-	-	22.9						
		140.1	20.0	3108	2.7				27.0	39.4	-	-	20.2						
	PLB 7004	157.7	8.9	6996	0.8	8.0	5.6	132M/4C	-	-	60.4	72.5	45.3	-	171	152	174	187	392-403
	PLB 7004	300.1	9.3	6657	0.8	8.0	5.6	132M/2A	-	-	60.4	72.5	45.3	-	167	148	170	183	392-403
		274.8	10.2	6096	0.8				-	-	57.5	69.0	43.1						
		248.4	11.3	5510	1.0				-	-	57.5	69.0	43.1						
		229.6	12.2	5093	1.0				-	-	57.5	69.0	43.1						
		210.3	13.3	4665	1.0				-	-	54.1	64.9	40.5						
		190.1	14.7	4217	1.2				-	-	54.1	64.9	40.5						
		174.1	16.1	3862	1.3				-	-	54.1	64.9	40.5						
		157.7	17.8	3498	1.4				-	-	47.7	57.3	35.8						
	PLB 5004*	220.6	12.7	4894	0.8	6.0	4.2	132M/2A	16.5	21.2	29.6	34.3	22.2	131	140	122	133	144	370-385
		184.4	15.2	4091	0.8				16.5	21.2	29.6	34.3	22.2						
		168.9	16.6	3747	1.0				16.5	21.2	29.6	34.3	22.2						
		140.1	20.0	3108	1.1				14.5	18.7	26.1	30.3	19.6						
	PLB 2504*	140.1	20.0	3108	0.8	4.0	2.8	132M/2A	14.5	18.7	26.1	30.3	19.6	125	134	116	127	138	348-363
	PLB 50003	220.5	4.1	15769	2.1	25.0	17.5	160M/6B	129.1	178.4	-	-	96.8	525	-	406	421	633	536-549
		139.9	6.4	10005	3.0				106.8	147.6	-	-	80.1						
	PLB 50003	220.5	6.3	10137	3.0	25.0	17.5	132M/4C	106.8	147.6	-	-	80.1	483	-	364	379	591	536-549
	PLB 35003	123.0	7.3	8796	3.0	23.0	16.1	160M/6B	82.8	117.3	-	-	62.1	457	-	420	428	518	516-529
	PLB 30003	163.8	5.5	11714	1.8	23.0	16.1	160M/6B	60.8	92.5	-	-	45.6	451	-	412	422	512	496-509
		135.9	6.6	9719	2.1				51.8	78.8	-	-	38.8						
	PLB 30003	163.8	8.5	7531	2.5	23.0	16.1	132M/4C	47.3	71.9	-	-	35.4	409	-	370	380	470	496-509
		135.9	10.3	6248	3.0				45.0	68.5	-	-	33.8						
	PLB 25003	238.2	3.8	17035	1.0	20.0	14.0	160M/6B	65.3	99.3	-	-	48.9	360	-	324	332	423	476-489
		197.4	4.6	14117	1.2				60.8	92.5	-	-	45.6						
		164.2	5.5	11743	1.8				60.8	92.5	-	-	45.6						
		141.6	6.4	10127	2.0				54.0	82.2	-	-	40.5						
		125.4	7.2	8968	2.2				51.8	78.8	-	-	38.8						
		104.2	8.6	7452	2.6				47.3	71.9	-	-	35.4						
		89.8	10.0	6422	2.9				45.0	68.5	-	-	33.8						
	PLB 25003	238.2	5.9	10951	1.4	20.0	14.0	132M/4C	54.0	82.2	-	-	40.5	318	-	282	290	381	476-489
		197.4	7.1	9075	1.7				51.8	78.8	-	-	38.8						
		164.2	8.5	7549	2.5				47.3	71.9	-	-	35.4						
		141.6	9.9	6510	2.9				45.0	68.5	-	-	33.8						
	PLB 25003	238.2	11.8	5476	2.6	20.0	14.0	132M/2A	45.0	68.5	-	-	33.8	314	-	278	286	377	476-489
		197.4	14.2	4538	3.0				42.3	64.4	-	-	31.7						
	PLB 18003	163.3	5.5	11679	1.2	17.0	11.9	160M/6B	36.0	63.6	84.0	111.6	27.0	280	307	249	285	330	452-469
		135.5	6.6	9690	1.6				34.5	61.0	80.5	107.0	25.9						
		116.7	7.7	8346	1.5				33.0	58.3	77.0	102.3	24.8						
		103.3	8.7	7388	1.7				31.5	55.7	73.5	97.7	23.6						
		85.7	10.5	6129	2.3				30.0	53.0	70.0	93.0	22.5						
		71.2	12.6	5092	2.7				28.2	49.8	65.8	87.4	21.2						
	PLB 18003	163.3	8.6	7508	1.7	17.0	11.9	132M/4C	31.5	55.7	73.5	97.7	23.6	238	265	207	243	288	452-469
		135.5	10.3	6230	2.3				30.0	53.0	70.0	93.0	22.5						
		116.7	12.0	5365	2.2				30.0	53.0	70.0	93.0	22.5						
		103.3	13.6	4749	2.5				28.2	49.8	65.8	87.4	21.2						
	PLB 18003	163.3	17.1	3754	3.0	17.0	11.9	132M/2A	28.2	49.8	65.8	87.4	21.2	234	261	203	239	284	452-469

* Soğutucu gereklidir / Cooling is required / Kühlung ist erforderlich / È richiesto raffreddamento / Le refroidissement est nécessaire / Se requiere un enfriamiento

P1 (kW)		iges	n2 (rpm)	M2 (Nm)	fs	Pt (20°C) (kW)	Pt (40°C) (kW)	Motor IE2	FR (kN)					~ Kg					mm
									MC	MS	PC	PS	CPC	M...	P...	F	FS	CPC	
7.50	PLB 16003	182.9	4.9	13080	0.8	15.0	10.5	160M/6B	40.5	71.6	94.5	125.6	30.4	274	301	243	279	324	428-445
		157.5	5.7	11264	0.9				36.0	63.6	84.0	111.6	27.0						
		140.0	6.4	10012	1.3				36.0	63.6	84.0	111.6	27.0						
		125.8	7.2	8997	1.1				34.5	61.0	80.5	107.0	25.9						
		120.6	7.5	8625	1.5				34.5	61.0	80.5	107.0	25.9						
		116.1	7.8	8303	1.2				33.0	58.3	77.0	102.3	24.8						
		96.2	9.4	6880	1.8				31.5	55.7	73.5	97.7	23.6						
		88.8	10.1	6351	2.0				30.0	53.0	70.0	93.0	22.5						
		76.5	11.8	5471	2.2				30.0	53.0	70.0	93.0	22.5						
		61.1	14.7	4370	2.7				28.2	49.8	65.8	87.4	21.2						
	PLB 16003	221.0	6.3	10160	1.0	15.0	10.5	132M/4C	36.0	63.6	84.0	111.6	27.0	232	259	201	237	282	428-445
		182.9	7.7	8409	1.2				33.0	58.3	77.0	102.3	24.8						
		157.5	8.9	7241	1.3				31.5	55.7	73.5	97.7	23.6						
		140.0	10.0	6436	1.9				30.0	53.0	70.0	93.0	22.5						
		125.8	11.1	5784	1.6				30.0	53.0	70.0	93.0	22.5						
		120.6	11.6	5545	2.2				30.0	53.0	70.0	93.0	22.5						
		116.1	12.1	5338	1.7				30.0	53.0	70.0	93.0	22.5						
		96.2	14.6	4423	2.6				28.2	49.8	65.8	87.4	21.2						
		88.8	15.8	4083	2.8				28.2	49.8	65.8	87.4	21.2						
	PLB 16003	266.4	10.5	6124	1.2	15.0	10.5	132M/2A	30.0	53.0	70.0	93.0	22.5	228	255	197	233	278	428-445
		221.0	12.7	5080	1.8				28.2	49.8	65.8	87.4	21.2						
		182.9	15.3	4204	2.1				28.2	49.8	65.8	87.4	21.2						
		157.5	17.8	3621	2.4				24.9	44.0	58.1	77.2	18.7						
		125.8	22.3	2892	2.8				24.9	44.0	58.1	77.2	18.7						
		116.1	24.1	2669	3.0				23.4	41.3	54.6	72.5	17.6						
	PLB 10003	140.0	6.4	10012	0.9	15.0	10.5	160M/6B	39.0	57.0	-	-	29.3	266	-	234	271	316	410-421
		125.8	7.2	8997	0.8				37.4	54.6	-	-	28.0						
		120.6	7.5	8625	1.0				37.4	54.6	-	-	28.0						
		116.1	7.8	8303	0.8				35.8	52.3	-	-	26.8						
		96.2	9.4	6880	1.2				34.1	49.9	-	-	25.6						
		88.8	10.1	6351	1.3				32.5	47.5	-	-	24.4						
		73.1	12.3	5228	1.8				32.5	47.5	-	-	24.4						
		61.1	14.7	4370	1.8				30.6	44.7	-	-	22.9						
		50.7	17.8	3626	2.4				27.0	39.4	-	-	20.2						
		46.4	19.4	3318	2.6				27.0	39.4	-	-	20.2						
	PLB 10003	182.9	7.7	8409	0.8	15.0	10.5	132M/4C	35.8	52.3	-	-	26.8	224	-	192	229	274	410-421
		157.5	8.9	7241	0.9				34.1	49.9	-	-	25.6						
		140.0	10.0	6436	1.3				32.5	47.5	-	-	24.4						
		125.8	11.1	5784	1.1				32.5	47.5	-	-	24.4						
		120.6	11.6	5545	1.5				32.5	47.5	-	-	24.4						
		116.1	12.1	5338	1.2				32.5	47.5	-	-	24.4						
		96.2	14.6	4423	1.8				30.6	44.7	-	-	22.9						
		88.8	15.8	4083	1.9				30.6	44.7	-	-	22.9						
		73.1	19.2	3361	2.6				27.0	39.4	-	-	20.2						
		61.1	22.9	2809	2.5				25.4	37.1	-	-	19.0						
	PLB 10003	266.4	10.5	6124	0.8	15.0	10.5	132M/2A	32.5	47.5	-	-	24.4	220	-	188	225	270	410-421
		221.0	12.7	5080	1.2				30.6	44.7	-	-	22.9						
		182.9	15.3	4204	1.4				30.6	44.7	-	-	22.9						
		157.5	17.8	3621	1.6				27.0	39.4	-	-	20.2						
		140.0	20.0	3218	2.3				27.0	39.4	-	-	20.2						
		125.8	22.3	2892	1.9				27.0	39.4	-	-	20.2						
		120.6	23.2	2772	2.6				25.4	37.1	-	-	19.0						
		116.1	24.1	2669	2.1				25.4	37.1	-	-	19.0						
	PLB 7003	94.2	9.6	6737	0.8	14.0	9.8	160M/6B	-	-	57.5	69.0	43.1	-	206	188	209	223	392-403
		77.9	11.6	5571	0.9				-	-	57.5	69.0	43.1						
		67.1	13.4	4799	1.0				-	-	54.1	64.9	40.5						
		60.5	14.9	4327	1.0				-	-	54.1	64.9	40.5						
		55.6	16.2	3976	1.2				-	-	54.1	64.9	40.5						
		53.6	16.8	3833	1.2				-	-	54.1	64.9	40.5						
	PLB 7003	106.3	13.2	4887	0.9	14.0	9.8	132M/4C	-	-	54.1	64.9	40.5	-	164	146	167	181	392-403
		94.2	14.9	4331	1.1				-	-	54.1	64.9	40.5						
		88.0	15.9	4046	1.0				-	-	54.1	64.9	40.5						
		77.9	18.0	3581	1.3				-	-	47.7	57.3	35.8						
		67.1	20.9	3085	1.4				-	-	47.7	57.3	35.8						
		60.5	23.1	2781	1.4				-	-	44.9	53.8	33.6						
		55.6	25.2	2556	1.7				-	-	44.9	53.8	33.6						
		53.6	26.1	2464	1.7				-	-	44.9	53.8	33.6						

P1 (kW)		iges	n2 (rpm)	M2 (Nm)	fs	Pt (20°C) (kW)	Pt (40°C) (kW)	Motor IE2	FR (kN) MC	MS	PC	PS	CPC	~ Kg M…	P…	F	FS	CPC	mm
7.50	PLB 7003	148.9	18.8	3423	0.8	14.0	9.8	132M/2A	-	-	47.7	57.3	35.8	-	160	142	163	177	392-403
		123.3	22.7	2834	1.1				-	-	44.9	53.8	33.6						
		106.3	26.3	2444	1.5				-	-	44.9	53.8	33.6						
		94.2	29.7	2165	1.9				-	-	42.6	51.1	31.9						
		88.0	31.8	2023	1.8				-	-	42.6	51.1	31.9						
		77.9	35.9	1791	2.3				-	-	40.3	48.3	30.2						
		67.1	41.7	1542	2.6				-	-	38.5	46.2	28.9						
		60.5	46.3	1391	2.5				-	-	37.4	44.9	28.0						
		55.6	50.4	1278	3.0				-	-	36.8	44.2	27.6						
	PLB 5003	47.5	18.9	3397	1.1	10.0	7.0	160M/6B	14.5	17.6	26.1	30.3	19.6	171	180	162	173	184	370-385
		39.4	22.8	2818	1.2				13.7	18.7	24.6	28.5	18.4						
	PLB 5003	67.8	20.6	3117	1.0	10.0	7.0	132M/4C	14.5	18.7	26.1	30.3	19.6	129	138	120	131	142	370-385
		53.9	26.0	2478	1.0				13.7	17.6	24.6	28.5	18.4						
		47.5	29.5	2184	1.5				13.0	16.7	23.3	27.0	17.5						
		39.4	35.5	1811	1.8				12.3	15.8	22.1	25.6	16.5						
	PLB 5003	118.8	23.6	2731	0.8	10.0	7.0	132M/2A	13.7	17.6	24.6	28.5	18.4	125	134	116	127	138	370-385
		102.3	27.4	2352	1.1				13.7	17.6	24.6	28.5	18.4						
		91.1	30.7	2094	0.8				13.0	16.7	23.3	27.0	17.5						
		84.9	33.0	1952	1.3				12.3	15.8	22.1	25.6	16.5						
		75.4	37.1	1733	1.2				12.3	15.8	22.1	25.6	16.5						
		67.8	41.3	1559	1.8				11.7	15.1	21.1	24.5	15.8						
		53.9	51.9	1239	1.8				11.2	14.4	20.2	23.4	15.1						
		47.5	58.9	1092	2.7				10.3	13.3	18.6	21.5	13.9						
	PLB 2503	39.4	22.8	2818	0.8	8.0	5.6	160M/6B	13.7	17.6	24.6	28.5	18.4	165	174	157	167	178	348-363
	PLB 2503	47.5	29.5	2184	1.1	8.0	5.6	132M/4C	13.0	16.7	23.3	27.0	17.5	123	132	115	125	136	348-363
		39.4	35.5	1811	1.2				12.3	15.8	22.1	25.6	16.5						
	PLB 2503	84.9	33.0	1952	0.9	8.0	5.6	132M/2A	12.3	15.8	22.1	25.6	16.5	119	128	111	121	132	348-363
		75.4	37.1	1733	0.8				12.3	15.8	22.1	25.6	16.5						
		67.8	41.3	1559	1.3				11.7	15.1	21.1	24.5	15.8						
		53.9	51.9	1239	1.3				11.2	14.4	20.2	23.4	15.1						
		47.5	58.9	1092	1.9				10.3	13.3	18.6	21.5	13.9						
		39.4	71.1	906	2.2				10.0	12.8	18.0	20.8	13.5						
	PLB 1603*	58.4	47.9	1342	0.8	5.0	3.5	132M/2A	3.5	4.3	7.7	9.6	5.8	102	104	100	103	107	326-340
		53.9	51.9	1239	0.8				3.5	4.3	7.7	9.6	5.8						
		44.7	62.6	1028	0.9				3.2	3.9	7.0	8.7	5.2						
		37.1	75.5	853	1.1				3.1	3.8	6.7	8.4	5.0						
	PLB 16002	36.7	24.5	2720	2.3	23.0	16.1	160M/6B	23.4	41.3	54.6	72.5	17.6	255	282	224	260	305	428-445
	PLB 10002	36.7	24.5	2720	1.5	23.0	16.1	160M/6B	25.4	37.1	-	-	19.0	247	-	215	252	297	410-421
		30.5	29.5	2260	2.4				24.1	35.2	-	-	18.0						
		23.3	38.6	1727	2.3				21.8	31.8	-	-	16.3						
	PLB 10002	36.7	38.1	1748	2.3	23.0	16.1	132M/4C	21.8	31.8	-	-	16.3	205	-	173	210	255	410-421
	PLB 7002	38.1	23.6	2824	0.9	18.0	12.6	160M/6B	-	-	44.9	53.8	33.6	-	217	198	220	233	392-403
		31.6	28.5	2342	1.3				-	-	42.6	51.1	31.9						
		27.2	33.1	2016	1.8				-	-	40.3	48.3	30.2						
		24.1	37.3	1786	2.3				-	-	40.3	48.3	30.2						
		20.0	45.0	1482	2.0				-	-	37.4	44.9	28.0						
		17.3	52.0	1282	2.6				-	-	36.8	44.2	27.6						
	PLB 7002	38.1	36.7	1815	1.4	18.0	12.6	132M/4C	-	-	40.3	48.3	30.2	-	175	156	178	191	392-403
		31.6	44.3	1505	1.9				-	-	37.4	44.9	28.0						
		27.2	51.5	1296	2.6				-	-	36.8	44.2	27.6						
		20.0	70.0	953	2.8				-	-	32.8	39.3	24.6						
	PLB 7002	38.1	73.5	908	2.4	18.0	12.6	132M/2A	-	-	32.2	38.6	24.2	-	171	152	174	187	392-403
	PLB 5002	32.7	27.5	2423	0.9	15.0	10.5	160M/6B	13.0	16.7	23.3	27.0	17.5	163	172	155	165	176	370-385
		28.1	32.0	2082	1.2				13.0	16.7	23.3	27.0	17.5						
		22.5	40.0	1667	1.7				11.7	15.1	21.1	24.5	15.8						
		20.6	43.7	1527	2.0				11.4	14.6	20.5	23.7	15.4						
		17.8	50.6	1319	1.7				11.2	14.4	20.2	23.4	15.1						
		14.2	63.4	1052	2.5				10.2	13.1	18.3	21.2	13.7						
		13.1	68.7	971	3.0				10.0	12.8	18.0	20.8	13.5						
	PLB 5002	39.5	35.4	1882	0.9	15.0	10.5	132M/4C	12.3	15.8	22.1	25.6	16.5	121	130	113	123	134	370-385
		32.7	42.8	1558	1.3				11.4	14.6	20.5	23.7	15.4						
		28.1	49.8	1339	1.7				11.2	14.4	20.2	23.4	15.1						
		22.5	62.2	1072	2.5				10.3	13.3	18.6	21.5	13.9						
		20.6	68.0	981	2.9				10.0	12.8	18.0	20.8	13.5						
		17.8	78.7	848	2.5				9.5	12.2	17.0	19.7	12.8						
	PLB 5002	39.5	70.9	941	1.6	15.0	10.5	132M/2A	10.0	12.8	18.0	20.8	13.5	117	126	109	119	130	370-385
		32.7	85.6	779	2.3				9.3	11.9	16.7	19.3	12.5						
		28.1	99.6	669	3.0				8.9	11.5	16.1	18.6	12.0						

* Soğutucu gereklidir / Cooling is required / Kühlung ist erforderlich / È richiesto raffreddamento / Le refroidissement est nécessaire / Se requiere un enfriamiento

P1 (kW)		iges	n2 (rpm)	M2 (Nm)	fs	Pt (20°C) (kW)	Pt (40°C) (kW)	Motor IE2	FR (kN)					~ Kg					mm
									MC	MS	PC	PS	CPC	M...	P...	F	FS	CPC	
7.50	PLB 2502	17.6 15.2 12.1	51.1 59.2 74.4	1304 1126 897	1.0 1.4 2.0	12.0	8.4	160M/6B	11.2 10.3 9.8	14.4 13.3 12.6	20.2 18.6 17.6	23.4 21.5 20.4	15.1 13.9 13.2	159	168	147	161	172	348-363
	PLB 2502	21.3 17.6 15.2 12.1	65.7 79.5 92.1 115.7	1015 839 724 576	1.0 1.5 2.0 2.8	12.0	8.4	132M/4C	10.2 9.5 9.1 8.5	13.1 12.2 11.7 10.9	18.3 17.0 16.4 15.3	21.2 19.7 19.0 17.7	13.7 12.8 12.3 11.5	117	126	105	119	130	348-363
	PLB 2502	21.3 17.6	131.5 159.1	507 419	1.7 2.6	12.0	8.4	132M/2A	8.1 7.8	10.4 10.0	14.5 14.0	16.8 16.2	10.9 10.5	113	122	101	115	126	348-363
	PLB 1602	12.6 10.4	71.4 86.5	934 771	1.0 1.2	8.0	5.6	160M/6B	3.1 2.9	3.8 3.6	6.8 6.4	8.6 8.0	5.1 4.8	142	144	140	143	147	326-340
	PLB 1602	16.4 12.6 10.4	85.4 111.1 134.6	781 600 495	0.8 1.5 1.7	8.0	5.6	132M/4C	2.9 2.7 2.5	3.6 3.3 3.1	6.4 5.8 5.5	8.0 7.3 6.9	4.8 4.4 4.1	100	102	98	101	105	326-340
	PLB 1602	19.8 16.4 12.6	141.4 170.7 222.2	472 391 300	1.0 1.5 2.6	8.0	5.6	132M/2A	2.5 2.3 2.2	3.1 2.9 2.7	5.5 5.1 4.9	6.9 6.4 6.1	4.1 3.8 3.6	96	98	94	97	101	326-340
	PLB 1002	10.4	86.5	771	0.8	8.0	5.6	160M/6B	2.9	3.6	6.4	8.0	4.8	140	142	138	141	145	304-318
	PLB 1002	12.6 10.4	111.1 134.6	600 495	1.0 1.1	8.0	5.6	132M/4C	2.7 2.5	3.3 3.1	5.8 5.5	7.3 6.9	4.4 4.1	98	100	96	99	103	304-318
	PLB 1002	16.4 12.6 10.4	170.7 222.2 269.2	391 300 248	1.0 1.7 2.0	8.0	5.6	132M/2A	2.3 2.2 2.1	2.9 2.7 2.6	5.1 4.9 4.6	6.4 6.1 5.8	3.8 3.6 3.5	94	96	92	95	99	304-318
9.20	PLB 90004	1010.0 840.3 771.2 724.4 663.9 638.5	1.4 1.7 1.8 1.9 2.1 2.2	54966 45731 41970 39423 36131 34748	1.6 1.9 2.0 2.1 2.8 2.3	30.0	21.0	132M/4	310.0 263.5 263.5 263.5 263.5 263.5	432.0 367.2 367.2 367.2 367.2 367.2	- - - - - -	- - - - - -	232.5 197.6 197.6 197.6 197.6 197.6	797	-	701	723	971	576-585
	PLB 65004	913.7 757.1 629.9 578.0 484.5 417.7 399.7	1.5 1.8 2.2 2.4 2.9 3.4 3.5	49725 41203 34280 31456 26367 22732 21752	1.5 1.8 2.1 2.2 2.6 2.9 3.0	25.0	17.5	132M/4	132.6 132.6 132.6 132.6 120.9 120.9 120.9	183.6 183.6 183.6 183.6 167.4 167.4 167.4	- - - - - - -	- - - - - - -	99.5 99.5 99.5 99.5 90.7 90.7 90.7	591	-	529	543	695	556-569
	PLB 50004	1119.0 961.2 926.1 856.4 797.5 708.7 669.0 587.6 543.4 506.3 455.5 395.2 351.3	1.3 1.5 1.5 1.6 1.8 2.0 2.1 2.4 2.6 2.8 3.1 3.5 4.0	60898 52310 50400 46607 43401 38569 36408 31978 29573 27554 24789 21507 19118	0.8 0.9 1.0 1.0 1.1 1.2 1.3 1.4 1.5 1.6 1.7 2.6 2.9	20.0	14.0	132M/4	178.0 178.0 151.3 151.3 151.3 151.3 151.3 151.3 138.0 138.0 138.0 129.1 129.1	246.0 246.0 209.1 209.1 209.1 209.1 209.1 209.1 190.7 190.7 190.7 178.4 178.4	- - - - - - - - - - - - -	- - - - - - - - - - - - -	133.5 133.5 113.5 113.5 113.5 113.5 113.5 113.5 103.5 103.5 103.5 96.8 96.8	502	-	444	457	610	536-549
	PLB 35004	741.3 658.8 591.8 542.0 452.9 414.8 385.0 352.6 319.4 292.5 244.3 223.7 202.7	1.9 2.1 2.4 2.6 3.1 3.4 3.6 4.0 4.4 4.8 5.7 6.3 6.9	40343 35853 32207 29497 24648 22574 20952 19189 17382 15918 13295 12174 11031	0.8 0.9 1.0 1.1 1.2 1.3 1.7 1.8 1.9 2.1 2.4 2.6 2.8	17.0	11.9	132M/4	122.4 122.4 122.4 111.6 111.6 111.6 104.4 104.4 104.4 97.2 86.4 86.4 82.8	173.4 173.4 173.4 158.1 158.1 158.1 147.9 147.9 147.9 137.7 122.4 122.4 117.3	- - - - - - - - - - - - -	- - - - - - - - - - - - -	91.8 91.8 91.8 83.7 83.7 83.7 78.3 78.3 78.3 72.9 64.8 64.8 62.1	370	-	334	342	433	516-529
	PLB 30004	676.7 519.8 460.7 385.0 352.6 306.0	2.1 2.7 3.0 3.6 4.0 4.6	36827 28288 25072 20952 19189 16653	0.9 0.8 1.2 1.4 1.5 1.7	17.0	11.9	132M/4	76.5 69.8 69.8 65.3 65.3 60.8	116.5 106.2 106.2 99.3 99.3 92.5	- - - - - -	- - - - - -	57.4 52.3 52.3 48.9 48.9 45.6	364	-	323	331	427	496-509

P1 (kW)		iges	n2 (rpm)	M2 (Nm)	fs	Pt (20°C) (kW)	Pt (40°C) (kW)	Motor IE2	FR (kN)					~ Kg					mm
									MC	MS	PC	PS	CPC	M...	P...	F	FS	CPC	
9.20	PLB 25004	789.4	1.8	42961	0.8	15.0	10.5	132M/4	76.5	116.5	-	-	57.4	333	-	297	305	396	476-489
		562.6	2.5	30618	1.0				76.5	116.5	-	-	57.4						
		498.3	2.8	27118	1.1				69.8	106.2	-	-	52.3						
		449.2	3.1	24446	1.2				69.8	106.2	-	-	52.3						
		397.8	3.5	21649	1.3				65.3	99.3	-	-	48.9						
		364.3	3.8	19826	1.4				65.3	99.3	-	-	48.9						
		304.0	4.6	16544	1.7				60.8	92.5	-	-	45.6						
		285.0	4.9	15510	1.8				60.8	92.5	-	-	45.6						
		252.4	5.5	13736	1.9				54.0	82.2	-	-	40.5						
	PLB 18004	394.3	3.6	21458	0.8	13.0	9.1	132M/4	43.5	76.9	101.5	134.9	32.6	240	267	209	245	290	452-469
		353.6	4.0	19244	0.9				43.5	76.9	101.5	134.9	32.6						
		323.8	4.3	17622	0.9				43.5	76.9	101.5	134.9	32.6						
		281.0	5.0	15293	1.0				40.5	71.6	94.5	125.6	30.4						
		224.4	6.2	12212	1.3				36.0	63.6	84.0	111.6	27.0						
		185.8	7.5	10112	1.5				33.0	58.3	77.0	102.3	24.8						
	PLB 16004	320.6	4.4	17448	0.9	11.0	7.7	132M/4	43.5	76.9	101.5	134.9	32.6	215	242	184	220	265	428-445
		290.4	4.8	15804	1.0				40.5	71.6	94.5	125.6	30.4						
		240.9	5.8	13110	0.9				36.0	63.6	84.0	111.6	27.0						
		230.9	6.1	12566	1.2				36.0	63.6	84.0	111.6	27.0						
		203.5	6.9	11075	1.3				34.5	61.0	80.5	107.0	25.9						
		184.4	7.6	10035	1.5				33.0	58.3	77.0	102.3	24.8						
		168.9	8.3	9192	1.8				33.0	58.3	77.0	102.3	24.8						
		140.1	10.0	7624	2.1				30.0	53.0	70.0	93.0	22.5						
	PLB 10004	230.9	6.1	12566	0.8	11.0	7.7	132M/4	39.0	57.0	-	-	29.3	207	-	175	212	257	410-421
		203.5	6.9	11075	0.8				37.4	54.6	-	-	28.0						
		184.4	7.6	10035	0.9				35.8	52.3	-	-	26.8						
		168.9	8.3	9192	1.1				35.8	52.3	-	-	26.8						
		140.1	10.0	7624	1.3				32.5	47.5	-	-	24.4						
	PLB 50003	220.5	6.3	12435	2.4	25.0	17.5	132M/4	106.8	147.6	-	-	80.1	483	-	364	379	591	536-549
	PLB 30003	163.8	8.5	9238	2.1	23.0	16.1	132M/4	47.3	71.9	-	-	35.4	409	-	370	380	470	496-509
		135.9	10.3	7664	2.4				45.0	68.5	-	-	33.8						
	PLB 25003	238.2	5.9	13433	1.2	20.0	14.0	132M/4	54.0	82.2	-	-	40.5	318	-	282	290	381	476-489
		197.4	7.1	11132	1.4				51.8	78.8	-	-	38.8						
		164.2	8.5	9260	2.1				47.3	71.9	-	-	35.4						
		141.6	9.9	7986	2.4				45.0	68.5	-	-	33.8						
		125.4	11.2	7072	2.6				45.0	68.5	-	-	33.8						
		104.2	13.4	5876	3.0				42.3	64.4	-	-	31.7						
	PLB 18003	163.3	8.6	9209	1.4	17.0	11.9	132M/4	31.5	55.7	73.5	97.7	23.6	238	265	207	243	288	452-469
		135.5	10.3	7642	1.9				30.0	53.0	70.0	93.0	22.5						
		116.7	12.0	6581	1.8				30.0	53.0	70.0	93.0	22.5						
		103.3	13.6	5826	2.0				28.2	49.8	65.8	87.4	21.2						
		85.7	16.3	4833	2.7				28.2	49.8	65.8	87.4	21.2						
	PLB 16003	221.0	6.3	12463	0.8	15.0	10.5	132M/4	36.0	63.6	84.0	111.6	27.0	232	259	201	237	282	428-445
		182.9	7.7	10315	1.0				33.0	58.3	77.0	102.3	24.8						
		157.5	8.9	8882	1.1				31.5	55.7	73.5	97.7	23.6						
		140.0	10.0	7895	1.6				30.0	53.0	70.0	93.0	22.5						
		125.8	11.1	7095	1.3				30.0	53.0	70.0	93.0	22.5						
		120.6	11.6	6801	1.8				30.0	53.0	70.0	93.0	22.5						
		116.1	12.1	6548	1.4				30.0	53.0	70.0	93.0	22.5						
		96.2	14.6	5425	2.1				28.2	49.8	65.8	87.4	21.2						
		88.8	15.8	5008	2.3				28.2	49.8	65.8	87.4	21.2						
		76.5	18.3	4314	2.6				24.9	44.0	58.1	77.2	18.7						
	PLB 10003	140.0	10.0	7895	1.1	15.0	10.5	132M/4	32.5	47.5	-	-	24.4	224	-	192	229	274	410-421
		125.8	11.1	7095	0.9				32.5	47.5	-	-	24.4						
		120.6	11.6	6801	1.2				32.5	47.5	-	-	24.4						
		116.1	12.1	6548	1.0				32.5	47.5	-	-	24.4						
		96.2	14.6	5425	1.4				30.6	44.7	-	-	22.9						
		88.8	15.8	5008	1.5				30.6	44.7	-	-	22.9						
		73.1	19.2	4123	2.1				27.0	39.4	-	-	20.2						
		61.1	22.9	3446	2.1				25.4	37.1	-	-	19.0						
		50.7	27.6	2859	2.8				24.1	35.2	-	-	18.0						
		46.4	30.2	2617	3.0				24.1	35.2	-	-	18.0						
	PLB 7003	94.2	14.9	5312	0.9	14.0	9.8	132M/4	-	-	54.1	64.9	40.5	-	164	146	167	181	392-403
		88.0	15.9	4963	0.8				-	-	54.1	64.9	40.5						
		77.9	18.0	4393	1.0				-	-	47.7	57.3	35.8						
		67.1	20.9	3784	1.2				-	-	47.7	57.3	35.8						
		60.5	23.1	3412	1.1				-	-	44.9	53.8	33.6						
		55.6	25.2	3136	1.4				-	-	44.9	53.8	33.6						
		53.6	26.1	3023	1.4				-	-	44.9	53.8	33.6						

P1 (kW)		iges	n2 (rpm)	M2 (Nm)	fs	Pt (20°C) (kW)	Pt (40°C) (kW)	Motor IE2	FR (kN)					~ Kg					mm
									MC	MS	PC	PS	CPC	M...	P...	F	FS	CPC	
9.20	PLB 5003	67.8	20.6	3824	0.8	10.0	7.0	132M/4	14.5	18.7	26.1	30.3	19.6	129	138	120	131	142	370-385
		53.9	26.0	3040	0.8				13.7	17.6	24.6	28.5	18.4						
		47.5	29.5	2679	1.3				13.0	16.7	23.3	27.0	17.5						
		39.4	35.5	2222	1.5				12.3	15.8	22.1	25.6	16.5						
	PLB 2503	47.5	29.5	2679	0.9	8.0	5.6	132M/4	13.0	16.7	23.3	27.0	17.5	123	132	115	125	136	348-363
		39.4	35.5	2222	1.0				12.3	15.8	22.1	25.6	16.5						
	PLB 16002	36.7	38.1	2145	2.7	23.0	16.1	132M/4	20.1	35.5	46.9	62.3	15.1	213	240	182	218	263	428-445
	PLB 10002	36.7	38.1	2145	1.8	23.0	16.1	132M/4	21.8	31.8	-	-	16.3	205	-	173	210	255	410-421
		30.5	45.9	1782	2.8				21.1	30.9	-	-	15.8						
		23.3	60.1	1362	2.6				19.2	28.0	-	-	14.4						
	PLB 7002	38.1	36.7	2227	1.1	18.0	12.6	132M/4	-	-	40.3	48.3	30.2	-	175	156	178	191	392-403
		31.6	44.3	1847	1.6				-	-	37.4	44.9	28.0						
		27.2	51.5	1590	2.1				-	-	36.8	44.2	27.6						
		24.1	58.1	1408	2.6				-	-	33.9	40.7	25.4						
		20.0	70.0	1169	2.3				-	-	32.8	39.3	24.6						
	PLB 5002	32.7	42.8	1911	1.1	15.0	10.5	132M/4	11.4	14.6	20.5	23.7	15.4	121	130	113	123	134	370-385
		28.1	49.8	1642	1.4				11.2	14.4	20.2	23.4	15.1						
		22.5	62.2	1315	2.0				10.3	13.3	18.6	21.5	13.9						
		20.6	68.0	1204	2.4				10.0	12.8	18.0	20.8	13.5						
		17.8	78.7	1040	2.0				9.5	12.2	17.0	19.7	12.8						
		14.2	98.6	830	3.0				8.9	11.5	16.1	18.6	12.0						
	PLB 2502	21.3	65.7	1245	0.8	12.0	8.4	132M/4	10.2	13.1	18.3	21.2	13.7	117	126	105	119	130	348-363
		17.6	79.5	1029	1.2				9.5	12.2	17.0	19.7	12.8						
		15.2	92.1	888	1.6				9.1	11.7	16.4	19.0	12.3						
		12.1	115.7	707	2.3				8.5	10.9	15.3	17.7	11.5						
	PLB 1602*	12.6	111.1	736	1.2	8.0	5.6	132M/4	2.7	3.3	5.8	7.3	4.4	100	102	98	101	105	326-340
		10.4	134.6	608	1.4				2.5	3.1	5.5	6.9	4.1						
	PLB 1002*	12.6	111.1	736	0.8	8.0	5.6	132M/4	2.7	3.3	5.8	7.3	4.4	98	100	96	99	103	304-318
		10.4	134.6	608	0.9				2.5	3.1	5.5	6.9	4.1						
11.00	PLB 90004	1010.0	0.9	102231	0.9	30.0	21.0	160L/6B	310.0	432.0	-	-	232.5	849	-	753	775	1023	576-585
		840.3	1.1	85054	1.1				310.0	432.0	-	-	232.5						
		771.2	1.2	78060	1.2				310.0	432.0	-	-	232.5						
		724.4	1.2	73323	1.2				310.0	432.0	-	-	232.5						
		663.9	1.4	67199	1.6				310.0	432.0	-	-	232.5						
		638.5	1.4	64628	1.3				310.0	432.0	-	-	232.5						
		572.4	1.6	57938	1.9				263.5	367.2	-	-	197.6						
		506.9	1.8	51308	2.0				263.5	367.2	-	-	197.6						
		459.6	2.0	46520	1.8				263.5	367.2	-	-	197.6						
		419.7	2.1	42482	2.4				263.5	367.2	-	-	197.6						
		390.0	2.3	39475	2.5				263.5	367.2	-	-	197.6						
		322.9	2.8	32684	3.0				240.3	334.8	-	-	180.2						
	PLB 90004	1010.0	1.4	65720	1.3	30.0	21.0	160M/4B	310.0	432.0	-	-	232.5	827	-	731	753	1001	576-585
		840.3	1.7	54678	1.6				263.5	367.2	-	-	197.6						
		771.2	1.8	50182	1.7				263.5	367.2	-	-	197.6						
		724.4	1.9	47136	1.7				263.5	367.2	-	-	197.6						
		663.9	2.1	43200	2.3				263.5	367.2	-	-	197.6						
		638.5	2.2	41547	1.9				263.5	367.2	-	-	197.6						
		572.4	2.4	37246	2.7				263.5	367.2	-	-	197.6						
		506.9	2.8	32984	2.9				240.3	334.8	-	-	180.2						
		459.6	3.0	29906	2.6				240.3	334.8	-	-	180.2						
	PLB 90004	1010.0	2.8	32860	2.4	30.0	21.0	160M/2B	240.3	334.8	-	-	180.2	820	-	724	746	994	576-585
		840.3	3.3	27339	2.7				240.3	334.8	-	-	180.2						
		771.2	3.6	25091	2.9				224.8	313.2	-	-	168.6						
	PLB 65004	913.7	1.0	92484	0.9	25.0	17.5	160L/6B	156.0	216.0	-	-	117.0	643	-	581	595	747	556-569
		757.1	1.2	76633	1.0				156.0	216.0	-	-	117.0						
		629.9	1.4	63758	1.2				156.0	216.0	-	-	117.0						
		578.0	1.6	58505	1.3				132.6	183.6	-	-	99.5						
		484.5	1.9	49041	1.5				132.6	183.6	-	-	99.5						
		417.7	2.2	42279	1.7				132.6	183.6	-	-	99.5						
		399.7	2.3	40457	1.7				132.6	183.6	-	-	99.5						
		344.5	2.6	34870	2.0				120.9	167.4	-	-	90.7						
		305.2	2.9	30892	2.2				120.9	167.4	-	-	90.7						
		265.0	3.4	26823	2.4				120.9	167.4	-	-	90.7						
		252.7	3.6	25578	2.5				113.1	156.6	-	-	84.8						
		234.7	3.8	23756	2.7				113.1	156.6	-	-	84.8						
	PLB 65004	913.7	1.5	59454	1.3	25.0	17.5	160M/4B	132.6	183.6	-	-	99.5	621	-	559	573	725	556-569
		757.1	1.8	49264	1.5				132.6	183.6	-	-	99.5						
		629.9	2.2	40987	1.7				132.6	183.6	-	-	99.5						
		578.0	2.4	37610	1.8				132.6	183.6	-	-	99.5						
		484.5	2.9	31526	2.1				120.9	167.4	-	-	90.7						
		417.7	3.4	27180	2.4				120.9	167.4	-	-	90.7						
		399.7	3.5	26008	2.5				120.9	167.4	-	-	90.7						
		344.5	4.1	22416	2.8				113.1	156.6	-	-	84.8						

* Soğutucu gereklidir / Cooling is required / Kühlung ist erforderlich / È richiesto raffreddamento / Le refroidissement est nécessaire / Se requiere un enfriamiento

P1 (kW)		iges	n2 (rpm)	M2 (Nm)	fs	Pt (20°C) (kW)	Pt (40°C) (kW)	Motor IE2	FR (kN)					~ Kg					mm
									MC	MS	PC	PS	CPC	M...	P...	F	FS	CPC	
11.00	PLB 65004	913.7	3.1	29727	2.2	25.0	17.5	160M/2B	120.9	167.4	-	-	90.7	614	-	552	566	718	556-569
		757.1	3.7	24632	2.6				113.1	156.6	-	-	84.8						
		629.9	4.4	20494	3.0				113.1	156.6	-	-	84.8						
	PLB 50004	587.6	1.5	59476	0.8	20.0	14.0	160L/6B	151.3	209.1	-	-	113.5	554	-	496	509	662	536-549
		543.4	1.7	55003	0.9				151.3	209.1	-	-	113.5						
		506.3	1.8	51247	0.9				151.3	209.1	-	-	113.5						
		455.5	2.0	46105	1.0				151.3	209.1	-	-	113.5						
		395.2	2.3	40002	1.5				151.3	209.1	-	-	113.5						
		351.3	2.6	35558	1.7				138.0	190.7	-	-	103.5						
		315.8	2.8	31965	1.9				138.0	190.7	-	-	103.5						
		289.0	3.1	29252	2.0				138.0	190.7	-	-	103.5						
		241.5	3.7	24444	2.3				129.1	178.4	-	-	96.8						
	PLB 50004	961.2	1.5	62545	0.8	20.0	14.0	160M/4B	178.0	246.0	-	-	133.5	532	-	474	487	640	536-549
		926.1	1.5	60261	0.8				151.3	209.1	-	-	113.5						
		856.4	1.6	55725	0.9				151.3	209.1	-	-	113.5						
		797.5	1.8	51893	0.9				151.3	209.1	-	-	113.5						
		708.7	2.0	46115	1.0				151.3	209.1	-	-	113.5						
		669.0	2.1	43531	1.0				151.3	209.1	-	-	113.5						
		587.6	2.4	38235	1.2				151.3	209.1	-	-	113.5						
		543.4	2.6	35359	1.2				138.0	190.7	-	-	103.5						
		506.3	2.8	32945	1.3				138.0	190.7	-	-	103.5						
		455.5	3.1	29639	1.4				138.0	190.7	-	-	103.5						
		395.2	3.5	25715	2.2				129.1	178.4	-	-	96.8						
		351.3	4.0	22859	2.4				129.1	178.4	-	-	96.8						
		315.8	4.4	20549	2.7				129.1	178.4	-	-	96.8						
		289.0	4.8	18805	2.9				120.2	166.1	-	-	90.1						
	PLB 50004	1348.8	2.1	43883	1.0	20.0	14.0	160M/2B	151.3	209.1	-	-	113.5	525	-	467	480	633	536-549
		1119.0	2.5	36406	1.2				151.3	209.1	-	-	113.5						
		961.2	2.9	31272	1.4				138.0	190.7	-	-	103.5						
		926.1	3.0	30130	1.4				138.0	190.7	-	-	103.5						
		856.4	3.3	27863	1.5				138.0	190.7	-	-	103.5						
		797.5	3.5	25946	1.6				129.1	178.4	-	-	96.8						
		708.7	4.0	23057	1.8				129.1	178.4	-	-	96.8						
		669.0	4.2	21766	1.9				129.1	178.4	-	-	96.8						
		587.6	4.8	19117	2.1				120.2	166.1	-	-	90.1						
		543.4	5.2	17679	2.2				120.2	166.1	-	-	90.1						
		506.3	5.5	16472	2.3				106.8	147.6	-	-	80.1						
		455.5	6.1	14820	2.6				106.8	147.6	-	-	80.1						
	PLB 35004	658.8	2.1	42868	0.8	17.0	11.9	160M/4B	122.4	173.4	-	-	91.8	400	-	364	372	463	516-529
		591.8	2.4	38508	0.8				122.4	173.4	-	-	91.8						
		542.0	2.6	35268	0.9				111.6	158.1	-	-	83.7						
		452.9	3.1	29470	1.0				111.6	158.1	-	-	83.7						
		414.8	3.4	26991	1.1				111.6	158.1	-	-	83.7						
		385.0	3.6	25052	1.4				104.4	147.9	-	-	78.3						
		352.6	4.0	22943	1.5				104.4	147.9	-	-	78.3						
		319.4	4.4	20783	1.6				104.4	147.9	-	-	78.3						
		292.5	4.8	19033	1.7				97.2	137.7	-	-	72.9						
		244.3	5.7	15896	2.0				86.4	122.4	-	-	64.8						
		223.7	6.3	14556	2.2				86.4	122.4	-	-	64.8						
		202.7	6.9	13190	2.4				82.8	117.3	-	-	62.1						
		185.6	7.5	12077	2.6				79.2	112.2	-	-	59.4						
	PLB 35004	414.8	2.2	41986	0.8	17.0	11.9	160L/6B	122.4	173.4	-	-	91.8	422	-	386	394	485	516-529
		385.0	2.3	38969	1.0				122.4	173.4	-	-	91.8						
		352.6	2.6	35690	1.0				111.6	158.1	-	-	83.7						
		319.4	2.8	32329	1.1				111.6	158.1	-	-	83.7						
		292.5	3.1	29607	1.2				111.6	158.1	-	-	83.7						
		244.3	3.7	24728	1.4				104.4	147.9	-	-	78.3						
		223.7	4.0	22643	1.5				104.4	147.9	-	-	78.3						
		202.7	4.4	20517	1.6				104.4	147.9	-	-	78.3						
		185.6	4.8	18786	1.8				97.2	137.7	-	-	72.9						
	PLB 35004	1253.8	2.2	40792	0.8	17.0	11.9	160M/2B	122.4	173.4	-	-	91.8	393	-	357	365	456	516-529
		1037.7	2.7	33761	0.9				111.6	158.1	-	-	83.7						
		860.9	3.3	28009	1.1				111.6	158.1	-	-	83.7						
		741.3	3.8	24118	1.2				104.4	147.9	-	-	78.3						
		658.8	4.3	21434	1.4				104.4	147.9	-	-	78.3						
		591.8	4.7	19254	1.5				97.2	137.7	-	-	72.9						
		542.0	5.2	17634	1.6				97.2	137.7	-	-	72.9						
		452.9	6.2	14735	1.8				86.4	122.4	-	-	64.8						
		414.8	6.8	13495	2.0				82.8	117.3	-	-	62.1						
		385.0	7.3	12526	2.5				82.8	117.3	-	-	62.1						
		352.6	7.9	11472	2.7				79.2	112.2	-	-	59.4						
		319.4	8.8	10392	2.9				75.6	107.1	-	-	56.7						

P1 (kW)	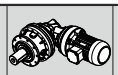	iges	n2 (rpm)	M2 (Nm)	fs	Pt (20°C) (kW)	Pt (40°C) (kW)	Motor IE2	FR (kN)					~ Kg					mm
									MC	MS	PC	PS	CPC	M...	P...	F	FS	CPC	
11.00	PLB 30004	385.0	2.3	38969	0.8	17.0	11.9	160L/6B	76.5	116.5	-	-	57.4	416	-	375	383	479	496-509
		352.6	2.6	35690	0.9				69.8	106.2	-	-	52.3						
		306.0	2.9	30973	1.0				69.8	106.2	-	-	52.3						
	PLB 30004	460.7	3.0	29978	1.0	17.0	11.9	160M/4B	69.8	106.2	-	-	52.3	394	-	353	361	457	496-509
		385.0	3.6	25052	1.1				65.3	99.3	-	-	48.9						
		352.6	4.0	22943	1.2				65.3	99.3	-	-	48.9						
		306.0	4.6	19911	1.4				60.8	92.5	-	-	45.6						
	PLB 30004	819.1	3.4	26649	0.8	17.0	11.9	160M/2B	69.8	106.2	-	-	52.3	387	-	346	354	450	496-509
		729.3	3.8	23728	0.9				65.3	99.3	-	-	48.9						
		676.7	4.1	22016	1.3				65.3	99.3	-	-	48.9						
		598.9	4.7	19485	1.1				60.8	92.5	-	-	45.6						
		519.8	5.4	16912	1.2				60.8	92.5	-	-	45.6						
		460.7	6.1	14989	1.8				54.0	82.2	-	-	40.5						
		385.0	7.3	12526	2.0				51.8	78.8	-	-	38.8						
		352.6	7.9	11472	2.2				49.5	75.4	-	-	37.1						
		306.0	9.2	9956	2.5				47.3	71.9	-	-	35.4						
	PLB 25004	397.8	2.3	40265	0.8	15.0	10.5	160L/6B	76.5	116.5	-	-	57.4	385	-	349	357	448	476-489
		364.3	2.5	36874	0.8				76.5	116.5	-	-	57.4						
		304.0	3.0	30771	1.0				69.8	106.2	-	-	52.3						
		285.0	3.2	28847	1.0				69.8	106.2	-	-	52.3						
		252.4	3.6	25548	1.1				65.3	99.3	-	-	48.9						
	PLB 25004	562.6	2.5	36608	0.8	15.0	10.5	160M/4B	76.5	116.5	-	-	57.4	363	-	327	335	426	476-489
		498.3	2.8	32424	0.9				69.8	106.2	-	-	52.3						
		449.2	3.1	29229	1.0				69.8	106.2	-	-	52.3						
		397.8	3.5	25885	1.1				65.3	99.3	-	-	48.9						
		364.3	3.8	23705	1.2				65.3	99.3	-	-	48.9						
		304.0	4.6	19781	1.4				60.8	92.5	-	-	45.6						
		285.0	4.9	18545	1.5				60.8	92.5	-	-	45.6						
		252.4	5.5	16424	1.6				54.0	82.2	-	-	40.5						
	PLB 25004	789.4	3.5	25683	1.1	15.0	10.5	160M/2B	65.3	99.3	-	-	48.9	356	-	320	328	419	476-489
		731.4	3.8	23796	0.9				65.3	99.3	-	-	48.9						
		651.2	4.3	21187	1.0				65.3	99.3	-	-	48.9						
		562.6	5.0	18304	1.5				60.8	92.5	-	-	45.6						
		498.3	5.6	16212	1.6				54.0	82.2	-	-	40.5						
		449.2	6.2	14615	1.8				54.0	82.2	-	-	40.5						
		397.8	7.0	12942	2.0				51.8	78.8	-	-	38.8						
		364.3	7.7	11852	2.1				49.5	75.4	-	-	37.1						
		304.0	9.2	9891	2.5				47.3	71.9	-	-	35.4						
		285.0	9.8	9272	2.6				45.0	68.5	-	-	33.8						
		252.4	11.1	8212	2.9				45.0	68.5	-	-	33.8						
	PLB 18004	323.8	4.3	21069	0.8	13.0	9.1	160M/4B	43.5	76.9	101.5	134.9	32.6	270	297	239	275	320	452-469
		281.0	5.0	18285	0.9				40.5	71.6	94.5	125.6	30.4						
		224.4	6.2	14602	1.1				36.0	63.6	84.0	111.6	27.0						
		185.8	7.5	12090	1.2				33.0	58.3	77.0	102.3	24.8						
	PLB 18004	185.8	4.8	18807	0.9	13.0	9.1	160L/6B	40.5	71.6	94.5	125.6	30.4	292	319	261	297	342	452-469
	PLB 18004	580.7	4.8	18893	0.8	13.0	9.1	160M/2B	40.5	71.6	94.5	125.6	30.4	263	290	232	268	313	452-469
		558.2	5.0	18161	0.8				40.5	71.6	94.5	125.6	30.4						
		500.1	5.6	16271	1.0				36.0	63.6	84.0	111.6	27.0						
		442.9	6.3	14410	1.1				36.0	63.6	84.0	111.6	27.0						
		394.3	7.1	12828	1.2				34.5	61.0	80.5	107.0	25.9						
		353.6	7.9	11504	1.3				33.0	58.3	77.0	102.3	24.8						
		323.8	8.6	10535	1.4				31.5	55.7	73.5	97.7	23.6						
		281.0	10.0	9142	1.6				30.0	53.0	70.0	93.0	22.5						
		224.4	12.5	7301	1.9				30.0	53.0	70.0	93.0	22.5						
		185.8	15.1	6045	2.2				28.2	49.8	65.8	87.4	21.2						
	PLB 16004	203.5	4.4	20598	0.8	11.0	7.7	160L/6B	43.5	76.9	101.5	134.9	32.6	267	294	236	272	317	428-445
		184.4	4.9	18665	0.8				40.5	71.6	94.5	125.6	30.4						
		168.9	5.3	17096	1.0				40.5	71.6	94.5	125.6	30.4						
		140.1	6.4	14181	1.2				36.0	63.6	84.0	111.6	27.0						
	PLB 16004	320.6	4.4	20861	0.8	11.0	7.7	160M/4B	43.5	76.9	101.5	134.9	32.6	245	272	214	250	295	428-445
		290.4	4.8	18896	0.8				40.5	71.6	94.5	125.6	30.4						
		230.9	6.1	15025	1.0				36.0	63.6	84.0	111.6	27.0						
		203.5	6.9	13242	1.1				34.5	61.0	80.5	107.0	25.9						
		184.4	7.6	11999	1.2				33.0	58.3	77.0	102.3	24.8						
		168.9	8.3	10990	1.5				33.0	58.3	77.0	102.3	24.8						
		140.1	10.0	9116	1.8				30.0	53.0	70.0	93.0	22.5						

P1 (kW)		iges	n2 (rpm)	M2 (Nm)	fs	Pt (20°C) (kW)	Pt (40°C) (kW)	Motor IE2	FR (kN) MC	MS	PC	PS	CPC	~ Kg M…	P…	F	FS	CPC	mm
11.00	PLB 16004	457.4	6.1	14881	0.8	11.0	7.7	160M/2B	36.0	63.6	84.0	111.6	27.0	238	265	207	243	288	428-445
		418.9	6.7	13629	0.8				34.5	61.0	80.5	107.0	25.9						
		379.5	7.4	12347	0.9				34.5	61.0	80.5	107.0	25.9						
		347.5	8.1	11306	1.0				33.0	58.3	77.0	102.3	24.8						
		320.6	8.7	10431	1.4				31.5	55.7	73.5	97.7	23.6						
		301.8	9.3	9819	1.1				31.5	55.7	73.5	97.7	23.6						
		290.4	9.6	9448	1.5				30.0	53.0	70.0	93.0	22.5						
		240.9	11.6	7838	1.3				30.0	53.0	70.0	93.0	22.5						
		230.9	12.1	7512	1.8				30.0	53.0	70.0	93.0	22.5						
		203.5	13.8	6621	2.0				28.2	49.8	65.8	87.4	21.2						
		184.4	15.2	5999	2.2				28.2	49.8	65.8	87.4	21.2						
		168.9	16.6	5495	2.7				28.2	49.8	65.8	87.4	21.2						
	PLB 10004	168.9	8.3	10990	0.9	11.0	7.7	160M/4B	35.8	52.3	-	-	26.8	237	-	205	242	287	410-421
		140.1	10.0	9116	1.1				32.5	47.5	-	-	24.4						
	PLB 10004	320.6	8.7	10431	0.8	11.0	7.7	160M/2B	34.1	49.9	-	-	25.6	230	-	198	235	280	410-421
		301.8	9.3	9819	0.9				34.1	49.9	-	-	25.6						
		278.4	10.1	9058	1.1				32.5	47.5	-	-	24.4						
		265.9	10.5	8651	1.0				32.5	47.5	-	-	24.4						
		230.9	12.1	7512	1.2				32.5	47.5	-	-	24.4						
		203.5	13.8	6621	1.2				30.6	44.7	-	-	22.9						
		184.4	15.2	5999	1.3				30.6	44.7	-	-	22.9						
		168.9	16.6	5495	1.6				30.6	44.7	-	-	22.9						
		140.1	20.0	4558	1.9				27.0	39.4	-	-	20.2						
	PLB 7004*	190.1	14.7	6185	0.8	8.0	5.6	160M/2B	-	-	54.1	64.9	40.5	-	194	175	197	210	392-403
		174.1	16.1	5664	0.9				-	-	54.1	64.9	40.5						
		157.7	17.8	5131	1.0				-	-	47.7	57.3	35.8						
	PLB 5004*	140.1	20.0	4558	0.8	6.0	4.2	160M/2B	14.5	18.7	26.1	30.3	19.6	158	167	149	160	171	370-385
	PLB 50003	220.5	4.1	23128	1.4	25.0	17.5	160L/6B	129.1	178.4	-	-	96.8	535	-	416	431	643	536-549
		154.3	5.8	16185	2.4				106.8	147.6	-	-	80.1						
		139.9	6.4	14674	2.0				106.8	147.6	-	-	80.1						
		118.1	7.6	12388	3.0				97.9	135.3	-	-	73.4						
	PLB 50003	220.5	6.3	14868	2.0	25.0	17.5	160M/4B	106.8	147.6	-	-	80.1	513	-	394	409	621	536-549
		139.9	10.0	9433	3.0				89.0	123.0	-	-	66.8						
	PLB 35003	123.0	7.3	12902	2.1	23.0	16.1	160L/6B	82.8	117.3	-	-	62.1	467	-	430	438	528	516-529
		94.1	9.6	9870	2.6				72.0	102.0	-	-	54.0						
	PLB 35003	123.0	11.4	8294	3.0	23.0	16.1	160M/4B	72.0	102.0	-	-	54.0	445	-	408	416	506	516-529
	PLB 30003	163.8	5.5	17181	1.2	23.0	16.1	160L/6B	60.8	92.5	-	-	45.6	461	-	422	432	522	496-509
		135.9	6.6	14255	1.4				51.8	78.8	-	-	38.8						
		104.5	8.6	10961	2.3				47.3	71.9	-	-	35.4						
		80.0	11.3	8391	2.9				45.0	68.5	-	-	33.8						
	PLB 30003	163.8	8.5	11045	1.7	23.0	16.1	160M/4B	47.3	71.9	-	-	35.4	439	-	400	410	500	496-509
		135.9	10.3	9164	2.0				45.0	68.5	-	-	33.8						
	PLB 25003	197.4	4.6	20705	0.8	20.0	14.0	160L/6B	60.8	92.5	-	-	45.6	370	-	334	342	433	476-489
		164.2	5.5	17223	1.2				60.8	92.5	-	-	45.6						
		141.6	6.4	14852	1.4				54.0	82.2	-	-	40.5						
		125.4	7.2	13153	1.5				51.8	78.8	-	-	38.8						
		104.2	8.6	10930	1.7				47.3	71.9	-	-	35.4						
		96.4	9.3	10111	2.4				47.3	71.9	-	-	35.4						
		89.8	10.0	9419	2.0				45.0	68.5	-	-	33.8						
		79.6	11.3	8349	2.2				45.0	68.5	-	-	33.8						
	PLB 25003	238.2	5.9	16062	1.0	20.0	14.0	160M/4B	54.0	82.2	-	-	40.5	348	-	312	320	411	476-489
		197.4	7.1	13311	1.2				51.8	78.8	-	-	38.8						
		164.2	8.5	11072	1.7				47.3	71.9	-	-	35.4						
		141.6	9.9	9548	2.0				45.0	68.5	-	-	33.8						
		125.4	11.2	8456	2.2				45.0	68.5	-	-	33.8						
		104.2	13.4	7026	2.5				42.3	64.4	-	-	31.7						
		89.8	15.6	6055	2.9				42.3	64.4	-	-	31.7						
	PLB 25003	238.2	11.8	8031	1.8	20.0	14.0	160M/2B	45.0	68.5	-	-	33.8	341	-	305	313	404	476-489
		197.4	14.2	6655	2.1				42.3	64.4	-	-	31.7						
	PLB 18003	163.3	5.5	17129	0.8	17.0	11.9	160L/6B	36.0	63.6	84.0	111.6	27.0	290	317	259	295	340	452-469
		135.5	6.6	14213	1.1				34.5	61.0	80.5	107.0	25.9						
		116.7	7.7	12241	1.1				33.0	58.3	77.0	102.3	24.8						
		103.3	8.7	10835	1.2				31.5	55.7	73.5	97.7	23.6						
		85.7	10.5	8989	1.6				30.0	53.0	70.0	93.0	22.5						
		71.2	12.6	7468	1.8				28.2	49.8	65.8	87.4	21.2						
		54.4	16.5	5706	2.3				28.2	49.8	65.8	87.4	21.2						

* Soğutucu gereklidir / Cooling is required / Kühlung ist erforderlich / È richiesto raffreddamento / Le refroidissement est nécessaire / Se requiere un enfriamiento

P1 (kW)		iges	n2 (rpm)	M2 (Nm)	fs	Pt (20°C) (kW)	Pt (40°C) (kW)	Motor IE2	FR (kN)					~ Kg					mm
									MC	MS	PC	PS	CPC	M...	P...	F	FS	CPC	
11.00	PLB 18003	163.3	8.6	11011	1.1	17.0	11.9	160M/4B	31.5	55.7	73.5	97.7	23.6	268	295	237	273	318	452-469
		135.5	10.3	9137	1.5				30.0	53.0	70.0	93.0	22.5						
		116.7	12.0	7869	1.5				30.0	53.0	70.0	93.0	22.5						
		103.3	13.6	6965	1.7				28.2	49.8	65.8	87.4	21.2						
		85.7	16.3	5779	2.3				28.2	49.8	65.8	87.4	21.2						
		71.2	19.7	4801	2.6				24.9	44.0	58.1	77.2	18.7						
	PLB 18003	163.3	17.1	5506	2.1	17.0	11.9	160M/2B	28.2	49.8	65.8	87.4	21.2	261	288	230	266	311	452-469
		135.5	20.7	4568	2.7				24.9	44.0	58.1	77.2	18.7						
		116.7	24.0	3935	2.7				23.4	41.3	54.6	72.5	17.6						
		103.3	27.1	3483	3.0				23.4	41.3	54.6	72.5	17.6						
	PLB 16003	140.0	6.4	14685	0.9	15.0	10.5	160L/6B	36.0	63.6	84.0	111.6	27.0	284	311	253	289	334	428-445
		125.8	7.2	13195	0.8				34.5	61.0	80.5	107.0	25.9						
		120.6	7.5	12650	1.0				34.5	61.0	80.5	107.0	25.9						
		116.1	7.8	12178	0.8				33.0	58.3	77.0	102.3	24.8						
		96.2	9.4	10090	1.2				31.5	55.7	73.5	97.7	23.6						
		88.8	10.1	9314	1.3				30.0	53.0	70.0	93.0	22.5						
		76.5	11.8	8024	1.5				30.0	53.0	70.0	93.0	22.5						
		61.1	14.7	6409	1.8				28.2	49.8	65.8	87.4	21.2						
		50.7	17.8	5318	2.4				24.9	44.0	58.1	77.2	18.7						
		46.4	19.4	4867	2.6				24.9	44.0	58.1	77.2	18.7						
	PLB 16003	182.9	7.7	12333	0.8	15.0	10.5	160M/4B	33.0	58.3	77.0	102.3	24.8	262	289	231	267	312	428-445
		157.5	8.9	10620	0.9				31.5	55.7	73.5	97.7	23.6						
		140.0	10.0	9440	1.3				30.0	53.0	70.0	93.0	22.5						
		125.8	11.1	8483	1.1				30.0	53.0	70.0	93.0	22.5						
		120.6	11.6	8132	1.5				30.0	53.0	70.0	93.0	22.5						
		116.1	12.1	7829	1.2				30.0	53.0	70.0	93.0	22.5						
		96.2	14.6	6487	1.8				28.2	49.8	65.8	87.4	21.2						
		88.8	15.8	5988	1.9				28.2	49.8	65.8	87.4	21.2						
		76.5	18.3	5158	2.2				24.9	44.0	58.1	77.2	18.7						
		61.1	22.9	4120	2.6				23.4	41.3	54.6	72.5	17.6						
	PLB 16003	266.4	10.5	8982	0.8	15.0	10.5	160M/2B	30.0	53.0	70.0	93.0	22.5	255	282	224	260	305	428-445
		221.0	12.7	7451	1.2				28.2	49.8	65.8	87.4	21.2						
		182.9	15.3	6166	1.4				28.2	49.8	65.8	87.4	21.2						
		157.5	17.8	5310	1.6				24.9	44.0	58.1	77.2	18.7						
		140.0	20.0	4720	2.3				24.9	44.0	58.1	77.2	18.7						
		125.8	22.3	4241	1.9				24.9	44.0	58.1	77.2	18.7						
		120.6	23.2	4066	2.6				23.4	41.3	54.6	72.5	17.6						
		116.1	24.1	3914	2.1				23.4	41.3	54.6	72.5	17.6						
	PLB 10003	96.2	9.4	10090	0.8	15.0	10.5	160L/6B	34.1	49.9	-	-	25.6	276	-	244	281	326	410-421
		88.8	10.1	9314	0.9				32.5	47.5	-	-	24.4						
		73.1	12.3	7667	1.2				32.5	47.5	-	-	24.4						
		61.1	14.7	6409	1.2				30.6	44.7	-	-	22.9						
		50.7	17.8	5318	1.6				27.0	39.4	-	-	20.2						
		46.4	19.4	4867	1.8				27.0	39.4	-	-	20.2						
	PLB 10003	140.0	10.0	9440	0.9	15.0	10.5	160M/4B	32.5	47.5	-	-	24.4	254	-	222	259	304	410-421
		125.8	11.1	8483	0.8				32.5	47.5	-	-	24.4						
		120.6	11.6	8132	1.0				32.5	47.5	-	-	24.4						
		116.1	12.1	7829	0.8				32.5	47.5	-	-	24.4						
		96.2	14.6	6487	1.2				30.6	44.7	-	-	22.9						
		88.8	15.8	5988	1.3				30.6	44.7	-	-	22.9						
		73.1	19.2	4929	1.7				27.0	39.4	-	-	20.2						
		61.1	22.9	4120	1.7				25.4	37.1	-	-	19.0						
		50.7	27.6	3419	2.4				24.1	35.2	-	-	18.0						
		46.4	30.2	3129	2.5				24.1	35.2	-	-	18.0						
	PLB 10003	221.0	12.7	7451	0.8	15.0	10.5	160M/2B	30.6	44.7	-	-	22.9	247	-	215	252	297	410-421
		182.9	15.3	6166	1.0				30.6	44.7	-	-	22.9						
		157.5	17.8	5310	1.1				27.0	39.4	-	-	20.2						
		140.0	20.0	4720	1.5				27.0	39.4	-	-	20.2						
		125.8	22.3	4241	1.3				27.0	39.4	-	-	20.2						
		120.6	23.2	4066	1.8				25.4	37.1	-	-	19.0						
		116.1	24.1	3914	1.4				25.4	37.1	-	-	19.0						
		96.2	29.1	3243	2.1				24.1	35.2	-	-	18.0						
		88.8	31.5	2994	2.3				24.1	35.2	-	-	18.0						
	PLB 7003	55.6	16.2	5832	0.8	14.0	9.8	160L/6B	-	-	54.1	64.9	40.5	-	216	198	219	233	392-403
		53.6	16.8	5622	0.8				-	-	54.1	64.9	40.5						
	PLB 7003	77.9	18.0	5253	0.9	14.0	9.8	160M/4B	-	-	47.7	57.3	35.8	-	194	176	197	211	392-403
		67.1	20.9	4525	1.0				-	-	47.7	57.3	35.8						
		60.5	23.1	4079	0.9				-	-	44.9	53.8	33.6						
		55.6	25.2	3749	1.1				-	-	44.9	53.8	33.6						
		53.6	26.1	3614	1.2				-	-	44.9	53.8	33.6						

P1 (kW)		iges	n2 (rpm)	M2 (Nm)	fs	Pt (20°C) (kW)	Pt (40°C) (kW)	Motor IE2	FR (kN) MC	MS	PC	PS	CPC	~ Kg M…	P…	F	FS	CPC	mm
11.00	PLB 7003	123.3	22.7	4157	0.8	14.0	9.8	160M/2B	-	-	44.9	53.8	33.6	-	187	169	190	204	392-403
		106.3	26.3	3584	1.0				-	-	44.9	53.8	33.6						
		94.2	29.7	3176	1.3				-	-	42.6	51.1	31.9						
		88.0	31.8	2967	1.2				-	-	42.6	51.1	31.9						
		77.9	35.9	2626	1.6				-	-	40.3	48.3	30.2						
		67.1	41.7	2262	1.7				-	-	38.5	46.2	28.9						
		60.5	46.3	2040	1.7				-	-	37.4	44.9	28.0						
		55.6	50.4	1875	2.0				-	-	36.8	44.2	27.6						
		53.6	52.2	1807	2.1				-	-	36.8	44.2	27.6						
	PLB 5003*	39.4	22.8	4133	0.8	10.0	7.0	160L/6B	13.7	17.6	24.6	28.5	18.4	181	190	172	183	194	370-385
	PLB 5003*	47.5	29.5	3203	1.0	10.0	7.0	160M/4B	13.0	16.7	23.3	27.0	17.5	159	168	150	161	172	370-385
		39.4	35.5	2657	1.2				12.3	15.8	22.1	25.6	16.5						
	PLB 5003*	84.9	33.0	2862	0.9	10.0	7.0	160M/2B	12.3	15.8	22.1	25.6	16.5	152	161	143	154	165	370-385
		75.4	37.1	2542	0.8				12.3	15.8	22.1	25.6	16.5						
		67.8	41.3	2286	1.3				11.7	15.1	21.1	24.5	15.8						
		53.9	51.9	1817	1.2				11.2	14.4	20.2	23.4	15.1						
		47.5	58.9	1601	1.8				10.3	13.3	18.6	21.5	13.9						
		39.4	71.1	1328	2.2				10.0	12.8	18.0	20.8	13.5						
	PLB 2503*	39.4	35.5	2657	0.8	8.0	5.6	160M/4B	12.3	15.8	22.1	25.6	16.5	153	162	145	155	166	348-363
	PLB 2503*	67.8	41.3	2286	0.9	8.0	5.6	160M/2B	11.7	15.1	21.1	24.5	15.8	146	155	138	148	159	348-363
		53.9	51.9	1817	0.9				11.2	14.4	20.2	23.4	15.1						
		47.5	58.9	1601	1.3				10.3	13.3	18.6	21.5	13.9						
		39.4	71.1	1328	1.5				10.0	12.8	18.0	20.8	13.5						
	PLB 1603*	37.1	75.5	1251	0.8	5.0	3.5	160M/2B	3.1	3.8	6.7	8.4	5.0	129	131	127	130	134	326-340
	PLB 16002	36.7	24.5	3989	1.5	23.0	16.1	160L/6B	23.4	41.3	54.6	72.5	17.6	265	292	234	270	315	428-445
		30.5	29.5	3315	2.4				22.2	39.2	51.8	68.8	16.7						
		23.3	38.6	2533	2.3				20.1	35.5	46.9	62.3	15.1						
	PLB 16002	36.7	38.1	2564	2.3	23.0	16.1	160M/4B	20.1	35.5	46.9	62.3	15.1	243	270	212	248	293	428-445
	PLB 10002	36.7	24.5	3989	1.1	23.0	16.1	160L/6B	25.4	37.1	-	-	19.0	257	-	225	262	307	410-421
		30.5	29.5	3315	1.6				24.1	35.2	-	-	18.0						
		23.3	38.6	2533	1.5				21.8	31.8	-	-	16.3						
		19.3	46.6	2098	2.4				21.1	30.9	-	-	15.8						
	PLB 10002	36.7	38.1	2564	1.5	23.0	16.1	160M/4B	21.8	31.8	-	-	16.3	235	-	203	240	285	410-421
		30.5	45.9	2131	2.3				21.1	30.9	-	-	15.8						
		23.3	60.1	1628	2.2				19.2	28.0	-	-	14.4						
	PLB 10002	36.7	76.3	1282	2.7	23.0	16.1	160M/2B	18.2	26.6	-	-	13.7	228	-	196	233	278	410-421
	PLB 7002	31.6	28.5	3435	0.9	18.0	12.6	160L/6B	-	-	42.6	51.1	31.9	-	227	208	230	243	392-403
		27.2	33.1	2956	1.2				-	-	40.3	48.3	30.2						
		24.1	37.3	2620	1.5				-	-	40.3	48.3	30.2						
		20.0	45.0	2174	1.3				-	-	37.4	44.9	28.0						
		17.3	52.0	1880	1.8				-	-	36.8	44.2	27.6						
		15.3	58.8	1663	2.2				-	-	33.9	40.7	25.4						
		12.7	70.9	1380	2.9				-	-	32.8	39.3	24.6						
	PLB 7002	38.1	36.7	2662	0.9	18.0	12.6	160M/4B	-	-	40.3	48.3	30.2	-	205	186	208	221	392-403
		31.6	44.3	2208	1.3				-	-	37.4	44.9	28.0						
		27.2	51.5	1901	1.8				-	-	36.8	44.2	27.6						
		24.1	58.1	1684	2.2				-	-	33.9	40.7	25.4						
		20.0	70.0	1398	1.9				-	-	32.8	39.3	24.6						
		17.3	80.9	1209	2.6				-	-	31.1	37.3	23.3						
	PLB 7002	38.1	73.5	1331	1.6	18.0	12.6	160M/2B	-	-	32.2	38.6	24.2	-	198	179	201	214	392-403
		31.6	88.6	1104	2.3				-	-	29.9	35.9	22.4						
	PLB 5002	28.1	32.0	3054	0.8	15.0	10.5	160L/6B	13.0	16.7	23.3	27.0	17.5	173	182	165	175	186	370-385
		22.5	40.0	2446	1.2				11.7	15.1	21.1	24.5	15.8						
		20.6	43.7	2239	1.4				11.4	14.6	20.5	23.7	15.4						
		17.8	50.6	1935	1.2				11.2	14.4	20.2	23.4	15.1						
		14.2	63.4	1543	1.7				10.2	13.1	18.3	21.2	13.7						
		13.1	68.7	1424	2.0				10.0	12.8	18.0	20.8	13.5						
	PLB 5002	32.7	42.8	2285	0.9	15.0	10.5	160M/4B	11.4	14.6	20.5	23.7	15.4	151	160	143	153	164	370-385
		28.1	49.8	1963	1.1				11.2	14.4	20.2	23.4	15.1						
		22.5	62.2	1572	1.7				10.3	13.3	18.6	21.5	13.9						
		20.6	68.0	1439	2.0				10.0	12.8	18.0	20.8	13.5						
		17.8	78.7	1244	1.7				9.5	12.2	17.0	19.7	12.8						
		14.2	98.6	992	2.5				8.9	11.5	16.1	18.6	12.0						
		13.1	106.9	915	2.9				8.9	11.5	16.1	18.6	12.0						
	PLB 5002	39.5	70.9	1380	1.1	15.0	10.5	160M/2B	10.0	12.8	18.0	20.8	13.5	144	153	136	146	157	370-385
		32.7	85.6	1142	1.6				9.3	11.9	16.7	19.3	12.5						
		28.1	99.6	982	2.1				8.9	11.5	16.1	18.6	12.0						
		22.5	124.4	786	3.0				8.5	10.9	15.3	17.7	11.5						
		17.8	157.3	622	3.0				7.8	10.0	14.0	16.2	10.5						

* Soğutucu gereklidir / Cooling is required / Kühlung ist erforderlich / È richiesto raffreddamento / Le refroidissement est nécessaire / Se requiere un enfriamiento

P1 (kW)		iges	n2 (rpm)	M2 (Nm)	fs	Pt (20°C) (kW)	Pt (40°C) (kW)	Motor IE2	FR (kN)					~ Kg					mm
									MC	MS	PC	PS	CPC	M...	P...	F	FS	CPC	
11.00	PLB 2502	15.2 12.1	59.2 74.4	1652 1315	0.9 1.3	12.0	8.4	160L/6B	10.3 9.8	13.3 12.6	18.6 17.6	21.5 20.4	13.9 13.2	169	178	157	171	182	348-363
	PLB 2502	17.6 15.2 12.1	79.5 92.1 115.7	1230 1062 845	1.0 1.4 1.9	12.0	8.4	160M/4B	9.5 9.1 8.5	12.2 11.7 10.9	17.0 16.4 15.3	19.7 19.0 17.7	12.8 12.3 11.5	147	156	135	149	160	348-363
	PLB 2502	21.3 17.6 15.2	131.5 159.1 184.2	744 615 531	1.2 1.8 2.4	12.0	8.4	160M/2B	8.1 7.8 7.4	10.4 10.0 9.6	14.5 14.0 13.4	16.8 16.2 15.5	10.9 10.5 10.0	140	149	128	142	153	348-363
	PLB 1602*	10.4	86.5	1130	0.8	8.0	5.6	160L/6B	2.9	3.6	6.4	8.0	4.8	152	154	150	153	157	326-340
	PLB 1602*	12.6 10.4	111.1 134.6	880 727	1.0 1.2	8.0	5.6	160M/4B	2.7 2.5	3.3 3.1	5.8 5.5	7.3 6.9	4.4 4.1	130	132	128	131	135	326-340
	PLB 1602*	16.4 12.6 10.4	170.7 222.2 269.2	573 440 363	1.0 1.8 2.1	8.0	5.6	160M/2B	2.3 2.2 2.1	2.9 2.7 2.6	5.1 4.9 4.6	6.4 6.1 5.8	3.8 3.6 3.5	123	125	121	124	128	326-340
	PLB 1002*	10.4	134.6	727	0.8	8.0	5.6	160M/4B	2.5	3.1	5.5	6.9	4.1	128	130	126	129	133	304-318
	PLB 1002*	12.6 10.4	222.2 269.2	440 363	1.1 1.4	8.0	5.6	160M/2B	2.2 2.1	2.7 2.6	4.9 4.6	6.1 5.8	3.6 3.5	121	123	119	122	126	304-318
15.00	PLB 90004	840.3 771.2 724.4 663.9 638.5 572.4 506.9 459.6 419.7 390.0 322.9 266.3 247.4	1.1 1.2 1.2 1.4 1.4 1.6 1.8 2.0 2.1 2.3 2.8 3.4 3.6	115983 106446 99986 91636 88130 79006 69965 63437 57930 53830 44569 36756 34148	0.8 0.8 0.9 1.2 1.0 1.4 1.5 1.3 1.8 1.9 2.2 2.5 2.7	30.0	21.0	180L/6A	310.0 310.0 310.0 310.0 310.0 263.5 263.5 263.5 263.5 263.5 240.3 240.3 224.8	432.0 432.0 432.0 432.0 432.0 367.2 367.2 367.2 367.2 367.2 334.8 334.8 313.2	- - - - - - - - - - - - -	- - - - - - - - - - - - -	232.5 232.5 232.5 232.5 232.5 197.6 197.6 197.6 197.6 197.6 180.2 180.2 168.6	865	-	769	791	1039	576-585
	PLB 90004	1010.0 840.3 771.2 724.4 663.9 638.5 572.4 506.9 459.6 419.7 390.0	1.4 1.7 1.8 1.9 2.1 2.2 2.4 2.8 3.0 3.3 3.6	89618 74561 68429 64277 58909 56655 50790 44978 40781 37240 34605	1.0 1.1 1.2 1.3 1.7 1.4 1.9 2.2 1.9 2.5 2.7	30.0	21.0	160L/4A	310.0 263.5 263.5 263.5 263.5 263.5 263.5 240.3 240.3 240.3 224.8	432.0 367.2 367.2 367.2 367.2 367.2 367.2 334.8 334.8 334.8 313.2	- - - - - - - - - - -	- - - - - - - - - - -	232.5 197.6 197.6 197.6 197.6 197.6 197.6 180.2 180.2 180.2 168.6	842	-	746	768	1016	576-585
	PLB 90004	1010.0 840.3 771.2 724.4 663.9 638.5 572.4 506.9 459.6 419.7 390.0	2.8 3.3 3.6 3.9 4.4	44809 37280 34215 32138 28327	1.7 2.0 2.1 2.3 2.5	30.0	21.0	160L/2A	240.3 240.3 224.8 224.8 224.8	334.8 334.8 313.2 313.2 313.2	- - - - -	- - - - -	180.2 180.2 168.6 168.6 168.6	832	-	736	758	1006	576-585
	PLB 65004	757.1 629.9 578.0 484.5 417.7 399.7 344.5 305.2 265.0 252.7 234.7 194.4	1.2 1.4 1.6 1.9 2.2 2.3 2.6 2.9 3.4 3.6 3.8 4.6	104500 86943 79779 66874 57654 55169 47550 42126 36577 34879 32395 26832	0.8 0.9 0.9 1.1 1.2 1.3 1.4 1.6 1.8 1.8 2.0 2.3	25.0	17.5	180L/6A	156.0 156.0 132.6 132.6 132.6 132.6 120.9 120.9 120.9 113.1 113.1 105.3	216.0 216.0 183.6 183.6 183.6 183.6 167.4 167.4 167.4 156.6 156.6 145.8	- - - - - - - - - - - -	- - - - - - - - - - - -	117.0 117.0 99.5 99.5 99.5 99.5 90.7 90.7 90.7 84.8 84.8 79.0	659	-	597	611	763	556-569
	PLB 65004	913.7 757.1 629.9 578.0 484.5 417.7 399.7 344.5 305.2 265.0 252.7 234.7	1.5 1.8 2.2 2.4 2.9 3.4 3.5 4.1 4.6 5.3 5.5 6.0	81074 67178 55892 51287 42990 37063 35466 30568 27081 23514 22422 20825	0.9 1.1 1.3 1.4 1.6 1.8 1.8 2.1 2.3 2.6 2.7 2.9	25.0	17.5	160L/4A	132.6 132.6 132.6 132.6 120.9 120.9 120.9 113.1 105.3 105.3 93.6 93.6	183.6 183.6 183.6 183.6 167.4 167.4 167.4 156.6 145.8 145.8 129.6 129.6	- - - - - - - - - - - -	- - - - - - - - - - - -	99.5 99.5 99.5 99.5 90.7 90.7 90.7 84.8 79.0 79.0 70.2 70.2	636	-	574	588	740	556-569

* Soğutucu gereklidir / Cooling is required / Kühlung ist erforderlich / È richiesto raffreddamento / Le refroidissement est nécessaire / Se requiere un enfriamiento

P1 (kW)		iges	n2 (rpm)	M2 (Nm)	fs	Pt (20°C) (kW)	Pt (40°C) (kW)	Motor IE2	FR (kN) MC	MS	PC	PS	CPC	~ Kg M…	P…	F	FS	CPC	mm
15.00	PLB 65004	913.7	3.1	40537	1.6	25.0	17.5	160L/2A	120.9	167.4	-	-	90.7	626	-	564	578	730	556-569
		757.1	3.7	33589	1.9				113.1	156.6	-	-	84.8						
		629.9	4.4	27946	2.2				113.1	156.6	-	-	84.8						
		578.0	4.8	25643	2.4				105.3	145.8	-	-	79.0						
		484.5	5.8	21495	2.8				93.6	129.6	-	-	70.2						
	PLB 50004	669.0	2.1	59361	0.8	20.0	14.0	160L/4A	151.3	209.1	-	-	113.5	547	-	489	502	655	536-549
		587.6	2.4	52138	0.9				151.3	209.1	-	-	113.5						
		543.4	2.6	48216	0.9				138.0	190.7	-	-	103.5						
		506.3	2.8	44925	1.0				138.0	190.7	-	-	103.5						
		455.5	3.1	40417	1.1				138.0	190.7	-	-	103.5						
		395.2	3.5	35067	1.6				129.1	178.4	-	-	96.8						
		351.3	4.0	31171	1.8				129.1	178.4	-	-	96.8						
		315.8	4.4	28021	1.9				129.1	178.4	-	-	96.8						
		289.0	4.8	25643	2.1				120.2	166.1	-	-	90.1						
		241.5	5.8	21429	2.4				106.8	147.6	-	-	80.1						
	PLB 50004	1348.8	2.1	59840	0.8	20.0	14.0	160L/2A	151.3	209.1	-	-	113.5	537	-	479	492	645	536-549
		1119.0	2.5	49645	0.9				151.3	209.1	-	-	113.5						
		961.2	2.9	42644	1.0				138.0	190.7	-	-	103.5						
		926.1	3.0	41087	1.0				138.0	190.7	-	-	103.5						
		856.4	3.3	37995	1.1				138.0	190.7	-	-	103.5						
		797.5	3.5	35382	1.2				129.1	178.4	-	-	96.8						
		708.7	4.0	31442	1.3				129.1	178.4	-	-	96.8						
		669.0	4.2	29681	1.4				129.1	178.4	-	-	96.8						
		587.6	4.8	26069	1.5				120.2	166.1	-	-	90.1						
		543.4	5.2	24108	1.6				120.2	166.1	-	-	90.1						
		506.3	5.5	22462	1.7				106.8	147.6	-	-	80.1						
		455.5	6.1	20209	1.9				106.8	147.6	-	-	80.1						
		395.2	7.1	17533	2.9				102.4	141.5	-	-	76.8						
	PLB 50004	395.2	2.3	54548	1.1	20.0	14.0	180L/6A	151.3	209.1	-	-	113.5	570	-	512	525	678	536-549
		351.3	2.6	48489	1.2				138.0	190.7	-	-	103.5						
		315.8	2.8	43589	1.4				138.0	190.7	-	-	103.5						
		289.0	3.1	39890	1.5				138.0	190.7	-	-	103.5						
		241.5	3.7	33333	1.7				129.1	178.4	-	-	96.8						
	PLB 35004	352.6	2.6	48668	0.8	17.0	11.9	180L/6A	111.6	158.1	-	-	83.7	438	-	402	410	501	516-529
		319.4	2.8	44086	0.8				111.6	158.1	-	-	83.7						
		292.5	3.1	40373	0.9				111.6	158.1	-	-	83.7						
		244.3	3.7	33720	1.0				104.4	147.9	-	-	78.3						
		223.7	4.0	30876	1.1				104.4	147.9	-	-	78.3						
		202.7	4.4	27978	1.2				104.4	147.9	-	-	78.3						
		185.6	4.8	25618	1.3				97.2	137.7	-	-	72.9						
	PLB 35004	452.9	3.1	40186	0.8	17.0	11.9	160L/4A	111.6	158.1	-	-	83.7	415	-	379	387	478	516-529
		414.8	3.4	36806	0.8				111.6	158.1	-	-	83.7						
		385.0	3.6	34161	1.0				104.4	147.9	-	-	78.3						
		352.6	4.0	31287	1.1				104.4	147.9	-	-	78.3						
		319.4	4.4	28341	1.2				104.4	147.9	-	-	78.3						
		292.5	4.8	25954	1.3				97.2	137.7	-	-	72.9						
		244.3	5.7	21677	1.5				86.4	122.4	-	-	64.8						
		223.7	6.3	19849	1.6				86.4	122.4	-	-	64.8						
		202.7	6.9	17986	1.7				82.8	117.3	-	-	62.1						
		185.6	7.5	16468	1.9				79.2	112.2	-	-	59.4						
	PLB 35004	860.9	3.3	38194	0.8	17.0	11.9	160L/2A	111.6	158.1	-	-	83.7	405	-	369	377	468	516-529
		741.3	3.8	32888	0.9				104.4	147.9	-	-	78.3						
		658.8	4.3	29228	1.0				104.4	147.9	-	-	78.3						
		591.8	4.7	26256	1.1				97.2	137.7	-	-	72.9						
		542.0	5.2	24046	1.2				97.2	137.7	-	-	72.9						
		452.9	6.2	20093	1.4				86.4	122.4	-	-	64.8						
		414.8	6.8	18403	1.5				82.8	117.3	-	-	62.1						
		385.0	7.3	17081	1.8				82.8	117.3	-	-	62.1						
		352.6	7.9	15643	2.0				79.2	112.2	-	-	59.4						
		319.4	8.8	14170	2.1				75.6	107.1	-	-	56.7						
		292.5	9.6	12977	2.3				72.0	102.0	-	-	54.0						
		244.3	11.5	10839	2.7				72.0	102.0	-	-	54.0						
		223.7	12.5	9925	2.9				67.7	95.9	-	-	50.8						
	PLB 30004	385.0	3.6	34161	0.8	17.0	11.9	160L/4A	65.3	99.3	-	-	48.9	409	-	368	376	472	496-509
		352.6	4.0	31287	0.9				65.3	99.3	-	-	48.9						
		306.0	4.6	27152	1.0				60.8	92.5	-	-	45.6						
	PLB 30004	676.7	4.1	30022	0.9	17.0	11.9	160L/2A	65.3	99.3	-	-	48.9	399	-	358	366	462	496-509
		598.9	4.7	26571	0.8				60.8	92.5	-	-	45.6						
		519.8	5.4	23061	0.9				60.8	92.5	-	-	45.6						
		460.7	6.1	20439	1.3				54.0	82.2	-	-	40.5						
		385.0	7.3	17081	1.5				51.8	78.8	-	-	38.8						
		352.6	7.9	15643	1.6				49.5	75.4	-	-	37.1						
		306.0	9.2	13576	1.8				47.3	71.9	-	-	35.4						

P1 (kW)		iges	n2 (rpm)	M2 (Nm)	fs	Pt (20°C) (kW)	Pt (40°C) (kW)	Motor IE2	FR (kN)					~ Kg					mm
									MC	MS	PC	PS	CPC	M...	P...	F	FS	CPC	
15.00	PLB 25004*	397.8	3.5	35297	0.8	15.0	10.5	160L/4A	65.3	99.3	-	-	48.9	378	-	342	350	441	476-489
		364.3	3.8	32325	0.9				65.3	99.3	-	-	48.9						
		304.0	4.6	26974	1.0				60.8	92.5	-	-	45.6						
		285.0	4.9	25288	1.1				60.8	92.5	-	-	45.6						
		252.4	5.5	22396	1.2				54.0	82.2	-	-	40.5						
	PLB 25004	789.4	3.5	35022	0.8	15.0	10.5	160L/2A	65.3	99.3	-	-	48.9	368	-	332	340	431	476-489
		562.6	5.0	24960	1.1				60.8	92.5	-	-	45.6						
		498.3	5.6	22107	1.2				54.0	82.2	-	-	40.5						
		449.2	6.2	19929	1.3				54.0	82.2	-	-	40.5						
		397.8	7.0	17649	1.5				51.8	78.8	-	-	38.8						
		364.3	7.7	16162	1.6				49.5	75.4	-	-	37.1						
		304.0	9.2	13487	1.8				47.3	71.9	-	-	35.4						
		285.0	9.8	12644	1.9				45.0	68.5	-	-	33.8						
		252.4	11.1	11198	2.1				45.0	68.5	-	-	33.8						
	PLB 25004	252.4	3.6	34838	0.8	15.0	10.5	180L/6A	65.3	99.3	-	-	48.9	401	-	365	373	464	476-489
	PLB 18004*	224.4	6.2	19911	0.8	13.0	9.1	160L/4A	36.0	63.6	84.0	111.6	27.0	285	312	254	290	335	452-469
		185.8	7.5	16486	0.9				33.0	58.3	77.0	102.3	24.8						
	PLB 18004*	442.9	6.3	19650	0.8	13.0	9.1	160L/2A	36.0	63.6	84.0	111.6	27.0	275	302	244	280	325	452-469
		394.3	7.1	17493	0.9				34.5	61.0	80.5	107.0	25.9						
		353.6	7.9	15688	0.9				33.0	58.3	77.0	102.3	24.8						
		323.8	8.6	14366	1.0				31.5	55.7	73.5	97.7	23.6						
		281.0	10.0	12467	1.1				30.0	53.0	70.0	93.0	22.5						
		224.4	12.5	9956	1.4				30.0	53.0	70.0	93.0	22.5						
		185.8	15.1	8243	1.6				28.2	49.8	65.8	87.4	21.2						
	PLB 16004*	168.9	5.3	23313	0.8	11.0	7.7	180L/6A	40.5	71.6	94.5	125.6	27.0	283	310	252	288	333	428-445
		140.1	6.4	19337	0.9				36.0	63.6	84.0	111.6	30.4						
	PLB 16004*	203.5	6.9	18057	0.8	11.0	7.7	160L/4A	34.5	61.0	80.5	107.0	25.9	260	287	229	265	310	428-445
		184.4	7.6	16362	0.9				33.0	58.3	77.0	102.3	24.8						
		168.9	8.3	14987	1.1				33.0	58.3	77.0	102.3	24.8						
		140.1	10.0	12431	1.3				30.0	53.0	70.0	93.0	22.5						
	PLB 16004*	320.6	8.7	14224	1.0	11.0	7.7	160L/2A	31.5	55.7	73.5	97.7	23.6	250	277	219	255	300	428-445
		301.8	9.3	13390	0.8				31.5	55.7	73.5	97.7	23.6						
		290.4	9.6	12884	1.1				30.0	53.0	70.0	93.0	22.5						
		240.9	11.6	10688	1.0				30.0	53.0	70.0	93.0	22.5						
		230.9	12.1	10244	1.3				30.0	53.0	70.0	93.0	22.5						
		203.5	13.8	9028	1.5				28.2	49.8	65.8	87.4	21.2						
		184.4	15.2	8181	1.6				28.2	49.8	65.8	87.4	21.2						
		168.9	16.6	7493	2.0				28.2	49.8	65.8	87.4	21.2						
		140.1	20.0	6216	2.3				24.9	44.0	58.1	77.2	18.7						
	PLB 10004*	140.1	10.0	12431	0.8	11.0	7.7	160L/4A	32.5	47.5	-	-	24.4	252	-	220	257	302	410-421
	PLB 10004*	278.4	10.1	12351	0.8	11.0	7.7	160L/2A	32.5	47.5	-	-	24.4	242	-	210	247	292	410-421
		230.9	12.1	10244	0.9				32.5	47.5	-	-	24.4						
		203.5	13.8	9028	0.9				30.6	44.7	-	-	22.9						
		184.4	15.2	8181	0.9				30.6	44.7	-	-	22.9						
		168.9	16.6	7493	1.2				30.6	44.7	-	-	22.9						
		140.1	20.0	6216	1.4				27.0	39.4	-	-	20.2						
	PLB 50003	220.5	4.1	31539	1.0	25.0	17.5	180L/6A	129.1	178.4	-	-	96.8	551	-	432	447	659	536-549
		154.3	5.8	22070	1.7				106.8	147.6	-	-	80.1						
		139.9	6.4	20010	1.5				106.8	147.6	-	-	80.1						
		118.1	7.6	16892	2.2				97.9	135.3	-	-	73.4						
		97.9	9.2	14003	2.5				93.5	129.2	-	-	70.1						
	PLB 50003	220.5	6.3	20275	1.5	25.0	17.5	160L/4A	106.8	147.6	-	-	80.1	528	-	409	424	636	536-549
		154.3	9.1	14188	2.5				93.5	129.2	-	-	70.1						
		139.9	10.0	12864	2.2				89.0	123.0	-	-	66.8						
	PLB 50003	220.5	12.7	10137	2.7	25.0	17.5	160L/2A	83.7	115.6	-	-	62.7	518	-	399	414	626	536-549
	PLB 35003	123.0	7.3	17593	1.5	23.0	16.1	180L/6A	82.8	117.3	-	-	62.1	483	-	446	454	544	516-529
		94.1	9.6	13459	1.9				72.0	102.0	-	-	54.0						
		80.0	11.3	11443	2.6				72.0	102.0	-	-	54.0						
		66.4	13.6	9497	3.0				67.7	95.9	-	-	50.8						
	PLB 35003	123.0	11.4	11310	2.2	23.0	16.1	160L/4A	72.0	102.0	-	-	54.0	460	-	423	431	521	516-529
		94.1	14.9	8652	2.7				67.7	95.9	-	-	50.8						
	PLB 30003	163.8	5.5	23429	0.9	23.0	16.1	180L/6A	60.8	92.5	-	-	45.6	477	-	438	448	538	496-509
		135.9	6.6	19438	1.0				51.8	78.8	-	-	38.8						
		104.5	8.6	14947	1.7				47.3	71.9	-	-	35.4						
		80.0	11.3	11443	2.1				45.0	68.5	-	-	33.8						
		66.4	13.6	9497	2.4				42.3	64.4	-	-	31.7						
		52.7	17.1	7538	2.9				42.3	64.4	-	-	31.7						

* Soğutucu gereklidir / Cooling is required / Kühlung ist erforderlich / È richiesto raffreddamento / Le refroidissement est nécessaire / Se requiere un enfriamiento

P1 (kW)		iges	n2 (rpm)	M2 (Nm)	fs	Pt (20°C) (kW)	Pt (40°C) (kW)	Motor IE2	FR (kN) MC	MS	PC	PS	CPC	~ Kg M…	P…	F	FS	CPC	mm
15.00	PLB 30003	163.8	8.5	15061	1.3	23.0	16.1	160L/4A	47.3	71.9	-	-	35.4	454	-	415	425	515	496-509
		135.9	10.3	12496	1.5				45.0	68.5	-	-	33.8						
		104.5	13.4	9609	2.4				42.3	64.4	-	-	31.7						
		80.0	17.5	7356	3.0				42.3	64.4	-	-	31.7						
	PLB 30003	163.8	17.1	7531	2.3	23.0	16.1	160L/2A	42.3	64.4	-	-	31.7	444	-	405	415	505	496-509
		135.9	20.6	6248	2.6				37.4	56.9	-	-	28.0						
	PLB 25003	164.2	5.5	23486	0.9	20.0	14.0	180L/6A	60.8	92.5	-	-	45.6	386	-	350	358	449	476-489
		141.6	6.4	20253	1.0				54.0	82.2	-	-	40.5						
		125.4	7.2	17936	1.1				51.8	78.8	-	-	38.8						
		104.2	8.6	14904	1.3				47.3	71.9	-	-	35.4						
		96.4	9.3	13788	1.8				47.3	71.9	-	-	35.4						
		89.8	10.0	12844	1.5				45.0	68.5	-	-	33.8						
		79.6	11.3	11385	1.6				45.0	68.5	-	-	33.8						
		69.1	13.0	9884	2.3				42.3	64.4	-	-	31.7						
		61.2	14.7	8754	2.6				42.3	64.4	-	-	31.7						
		50.7	17.8	7252	3.0				37.4	56.9	-	-	28.0						
	PLB 25003	197.4	7.1	18151	0.8	20.0	14.0	160L/4A	51.8	78.8	-	-	38.8	363	-	327	335	426	476-489
		164.2	8.5	15098	1.3				47.3	71.9	-	-	35.4						
		141.6	9.9	13020	1.4				45.0	68.5	-	-	33.8						
		125.4	11.2	11530	1.6				45.0	68.5	-	-	33.8						
		104.2	13.4	9581	1.9				42.3	64.4	-	-	31.7						
		96.4	14.5	8864	2.6				42.3	64.4	-	-	31.7						
		89.8	15.6	8257	2.1				42.3	64.4	-	-	31.7						
		79.6	17.6	7319	2.3				37.4	56.9	-	-	28.0						
	PLB 25003	238.2	11.8	10951	1.3	20.0	14.0	160L/2A	45.0	68.5	-	-	33.8	353	-	317	325	416	476-489
		197.4	14.2	9075	1.5				42.3	64.4	-	-	31.7						
		164.2	17.1	7549	2.3				42.3	64.4	-	-	31.7						
		141.6	19.8	6510	2.5				37.4	56.9	-	-	28.0						
		125.4	22.3	5765	2.8				37.4	56.9	-	-	28.0						
	PLB 18003	135.5	6.6	19381	0.8	17.0	11.9	180L/6A	34.5	61.0	80.5	107.0	25.9	306	333	275	311	356	452-469
		116.7	7.7	16692	0.8				33.0	58.3	77.0	102.3	24.8						
		103.3	8.7	14775	0.9				31.5	55.7	73.5	97.7	23.6						
		85.7	10.5	12258	1.2				30.0	53.0	70.0	93.0	22.5						
		71.2	12.6	10184	1.3				28.2	49.8	65.8	87.4	21.2						
		54.4	16.5	7781	1.7				28.2	49.8	65.8	87.4	21.2						
	PLB 18003	163.3	8.6	15015	0.8	17.0	11.9	160L/4A	31.5	55.7	73.5	97.7	23.6	283	310	252	288	333	452-469
		135.5	10.3	12459	1.1				30.0	53.0	70.0	93.0	22.5						
		116.7	12.0	10730	1.1				30.0	53.0	70.0	93.0	22.5						
		103.3	13.6	9498	1.2				28.2	49.8	65.8	87.4	21.2						
		85.7	16.3	7880	1.7				28.2	49.8	65.8	87.4	21.2						
		71.2	19.7	6547	1.9				24.9	44.0	58.1	77.2	18.7						
		54.4	25.7	5002	2.4				23.4	41.3	54.6	72.5	17.6						
	PLB 18003	163.3	17.1	7508	1.5	17.0	11.9	160L/2A	28.2	49.8	65.8	87.4	21.2	273	300	242	278	323	452-469
		135.5	20.7	6230	2.0				24.9	44.0	58.1	77.2	18.7						
		116.7	24.0	5365	2.0				23.4	41.3	54.6	72.5	17.6						
		103.3	27.1	4749	2.2				23.4	41.3	54.6	72.5	17.6						
		85.7	32.7	3940	3.0				21.0	37.1	49.0	65.1	15.8						
	PLB 16003	120.6	7.5	17250	1.9	15.0	10.5	180L/6A	34.5	61.0	80.5	107.0	25.9	300	327	269	305	350	428-445
		96.2	9.4	13760	1.8				31.5	55.7	73.5	97.7	23.6						
		88.8	10.1	12701	1.3				30.0	53.0	70.0	93.0	22.5						
		76.5	11.8	10942	1.1				30.0	53.0	70.0	93.0	22.5						
		61.1	14.7	8739	1.0				28.2	49.8	65.8	87.4	21.2						
		50.7	17.8	7252	0.9				24.9	44.0	58.1	77.2	18.7						
		46.4	19.4	6637	0.8				24.9	44.0	58.1	77.2	18.7						
	PLB 16003	140.0	10.0	12873	1.0	15.0	10.5	160L/4A	30.0	53.0	70.0	93.0	22.5	277	304	246	282	327	428-445
		125.8	11.1	11567	0.8				30.0	53.0	70.0	93.0	22.5						
		120.6	11.6	11089	1.1				30.0	53.0	70.0	93.0	22.5						
		116.1	12.1	10675	0.9				30.0	53.0	70.0	93.0	22.5						
		96.2	14.6	8846	1.3				28.2	49.8	65.8	87.4	21.2						
		88.8	15.8	8165	1.4				28.2	49.8	65.8	87.4	21.2						
		76.5	18.3	7034	1.6				24.9	44.0	58.1	77.2	18.7						
		61.1	22.9	5618	1.9				23.4	41.3	54.6	72.5	17.6						
		50.7	27.6	4662	2.6				22.2	39.2	51.8	68.8	16.7						
		46.4	30.2	4266	2.8				22.2	39.2	51.8	68.8	16.7						
	PLB 16003	221.0	12.7	10160	0.9	15.0	10.5	160L/2A	28.2	49.8	65.8	87.4	21.2	267	294	236	272	317	428-445
		182.9	15.3	8409	1.0				28.2	49.8	65.8	87.4	21.2						
		157.5	17.8	7241	1.2				24.9	44.0	58.1	77.2	18.7						
		140.0	20.0	6436	1.7				24.9	44.0	58.1	77.2	18.7						
		125.8	22.3	5784	1.4				24.9	44.0	58.1	77.2	18.7						
		120.6	23.2	5545	1.9				23.4	41.3	54.6	72.5	17.6						
		116.1	24.1	5338	1.5				23.4	41.3	54.6	72.5	17.6						
		96.2	29.1	4423	2.3				22.2	39.2	51.8	68.8	16.7						
		88.8	31.5	4083	2.5				22.2	39.2	51.8	68.8	16.7						
		76.5	36.6	3517	2.8				21.0	37.1	49.0	65.1	15.8						

P1 (kW)		iges	n2 (rpm)	M2 (Nm)	fs	Pt (20°C) (kW)	Pt (40°C) (kW)	Motor IE2	FR (kN) MC	MS	PC	PS	CPC	~ Kg M…	P…	F	FS	CPC	mm
15.00	PLB 10003	73.1 61.1 50.7 46.4	12.3 14.7 17.8 19.4	10456 8739 7252 6637	0.9 0.9 1.2 1.3	15.0	10.5	180L/6A	32.5 30.6 27.0 27.0	47.5 44.7 39.4 39.4	- - - -	- - - -	24.4 22.9 20.2 20.2	292	-	260	297	342	410-421
	PLB 10003	96.2 88.8 73.1 61.1 50.7 46.4	14.6 15.8 19.2 22.9 27.6 30.2	8846 8165 6721 5618 4662 4266	0.9 0.9 1.3 1.3 1.7 1.9	15.0	10.5	160L/4A	30.6 30.6 27.0 25.4 24.1 24.1	44.7 44.7 39.4 37.1 35.2 35.2	- - - - - -	- - - - - -	22.9 22.9 20.2 19.0 18.0 18.0	269	-	237	274	319	410-421
	PLB 10003	157.5 140.0 125.8 120.6 116.1 96.2 88.8 73.1 61.1 50.7	17.8 20.0 22.3 23.2 24.1 29.1 31.5 38.3 45.8 55.2	7241 6436 5784 5545 5338 4423 4083 3361 2809 2331	0.8 1.1 1.0 1.3 1.0 1.6 1.7 2.3 2.3 3.0	15.0	10.5	160L/2A	27.0 27.0 27.0 25.4 25.4 24.1 24.1 21.8 21.1 20.2	39.4 39.4 39.4 37.1 37.1 35.2 35.2 31.8 30.9 29.5	- - - - - - - - - -	- - - - - - - - - -	20.2 20.2 20.2 19.0 19.0 18.0 18.0 16.3 15.8 15.1	259	-	227	264	309	410-421
	PLB 7003*	55.6 53.6	25.2 26.1	5112 4928	0.8 0.9	14.0	9.8	160L/4A	- -	- -	44.9 44.9	53.8 53.8	33.6 33.6	-	209	191	212	226	392-403
	PLB 7003*	106.3 94.2 88.0 77.9 67.1 60.5 55.6 53.6	26.3 29.7 31.8 35.9 41.7 46.3 50.4 52.2	4887 4331 4046 3581 3085 2781 2556 2464	0.8 1.0 0.9 1.1 1.3 1.2 1.5 1.5	14.0	9.8	160L/2A	- - - - - - - -	- - - - - - - -	44.9 42.6 42.6 40.3 38.5 37.4 36.8 36.8	53.8 51.1 51.1 48.3 46.2 44.9 44.2 44.2	33.6 31.9 31.9 30.2 28.9 28.0 27.6 27.6	-	199	181	202	216	392-403
	PLB 5003*	47.5 39.4	29.5 35.5	4368 3623	0.8 0.9	10.0	7.0	160L/4A	13.0 12.3	16.7 15.8	23.3 22.1	27.0 25.6	17.5 16.5	174	183	165	176	187	370-385
	PLB 5003*	67.8 53.9 47.5 39.4	41.3 51.9 58.9 71.1	3117 2478 2184 1811	0.9 0.9 1.3 1.6	10.0	7.0	160L/2A	11.7 11.2 10.3 10.0	15.1 14.4 13.3 12.8	21.1 20.2 18.6 18.0	24.5 23.4 21.5 20.8	15.8 15.1 13.9 13.5	164	173	155	166	177	370-385
	PLB 2503*	47.5 39.4	58.9 71.1	2184 1811	0.9 1.1	8.0	5.6	160L/2A	10.3 10.0	13.3 12.8	18.6 18.0	21.5 20.8	13.9 13.5	158	167	150	160	171	348-363
	PLB 25002	29.2	30.8	4328	2.8	30.0	21.0	180L/6A	33.3	50.7	-	-	25.0	418	-	381	389	481	476-489
	PLB 16002	36.7 30.5 23.3 19.3	24.5 29.5 38.6 46.6	5440 4521 3454 2861	1.1 1.7 1.7 2.5	23.0	16.1	180L/6A	23.4 22.2 20.1 19.5	41.3 39.2 35.5 34.5	54.6 51.8 46.9 45.5	72.5 68.8 62.3 60.5	17.6 16.7 15.1 14.6	281	308	250	286	331	428-445
	PLB 16002	36.7 30.5 23.3	38.1 45.9 60.1	3497 2906 2220	1.7 2.5 2.4	23.0	16.1	160L/4A	20.1 19.5 17.7	35.5 34.5 31.3	46.9 45.5 41.3	62.3 60.5 54.9	15.1 14.6 13.3	258	285	227	263	308	428-445
	PLB 16002	36.7	76.3	1748	2.9	23.0	16.1	160L/2A	16.8	29.7	39.2	52.1	12.6	248	275	217	253	298	428-445
	PLB 10002	36.7 30.5 23.3 19.3 14.8	24.5 29.5 38.6 46.6 60.8	5440 4521 3454 2861 2194	0.8 1.2 1.1 1.7 2.8	23.0	16.1	180L/6A	25.4 24.1 21.8 21.1 19.2	37.1 35.2 31.8 30.9 28.0	- - - - -	- - - - -	19.0 18.0 16.3 15.8 14.4	273	-	241	278	323	410-421
	PLB 10002	36.7 30.5 23.3 19.3	38.1 45.9 60.1 72.5	3497 2906 2220 1839	1.1 1.7 1.6 2.5	23.0	16.1	160L/4A	21.8 21.1 19.2 18.2	31.8 30.9 28.0 26.6	- - - -	- - - -	16.3 15.8 14.4 13.7	250	-	218	255	300	410-421
	PLB 10002	36.7 30.5 23.3	76.3 91.8 120.2	1748 1453 1110	2.0 3.0 2.9	23.0	16.1	160L/2A	18.2 16.9 15.8	26.6 24.7 23.0	- - -	- - -	13.7 12.7 11.8	240	-	208	245	290	410-421
	PLB 7002	27.2 24.1 20.1 17.3 15.3 12.7	33.1 37.3 45.0 52.0 58.8 70.9	4032 3572 2964 2564 2268 1882	0.9 1.1 1.0 1.3 1.6 2.1	18.0	12.6	180L/6A	- - - - - -	- - - - - -	40.3 40.3 37.4 36.8 33.9 32.8	48.3 48.3 44.9 44.2 40.7 39.3	30.2 30.2 28.0 27.6 25.4 24.6	-	243	224	246	259	392-403

* Soğutucu gereklidir / Cooling is required / Kühlung ist erforderlich / È richiesto raffreddamento / Le refroidissement est nécessaire / Se requiere un enfriamiento

P1 (kW)		iges	n2 (rpm)	M2 (Nm)	fs	Pt (20°C) (kW)	Pt (40°C) (kW)	Motor IE2	FR (kN)					~ Kg					mm
									MC	MS	PC	PS	CPC	M...	P...	F	FS	CPC	
15.00	PLB 7002	31.6	44.3	3011	1.0	18.0	12.6	160L/4A	-	-	37.4	44.9	28.0	-	220	201	223	236	392-403
		27.2	51.5	2592	1.3				-	-	36.8	44.2	27.6						
		24.1	58.1	2296	1.6				-	-	33.9	40.7	25.4						
		20.0	70.0	1906	1.4				-	-	32.8	39.3	24.6						
		17.3	80.9	1648	1.9				-	-	31.1	37.3	23.3						
		15.3	91.5	1458	2.4				-	-	29.9	35.9	22.4						
		12.7	110.2	1210	3.0				-	-	27.9	33.5	20.9						
	PLB 7002	38.1	73.5	1815	1.2	18.0	12.6	160L/2A	-	-	32.2	38.6	24.2	-	210	191	213	226	392-403
		31.6	88.6	1505	1.7				-	-	29.9	35.9	22.4						
		27.2	102.9	1296	2.3				-	-	29.3	35.2	22.0						
		24.1	116.2	1148	2.9				-	-	27.9	33.5	20.9						
		20.0	140.0	953	2.5				-	-	26.5	31.7	19.8						
	PLB 5002	22.5	40.0	3335	0.9	15.0	10.5	180L/6A	11.7	15.1	21.1	24.5	15.8	189	198	181	191	202	370-385
		20.6	43.7	3053	1.0				11.4	14.6	20.5	23.7	15.4						
		17.8	50.6	2638	0.9				11.2	14.4	20.2	23.4	15.1						
		14.2	63.4	2105	1.3				10.2	13.1	18.3	21.2	13.7						
		13.1	68.7	1942	1.5				10.0	12.8	18.0	20.8	13.5						
	PLB 5002	28.1	49.8	2677	0.8	15.0	10.5	160L/4A	11.2	14.4	20.2	23.4	15.1	166	175	158	168	179	370-385
		22.5	62.2	2144	1.3				10.3	13.3	18.6	21.5	13.9						
		20.6	68.0	1963	1.5				10.0	12.8	18.0	20.8	13.5						
		17.8	78.7	1696	1.2				9.5	12.2	17.0	19.7	12.8						
		14.2	98.6	1353	1.8				8.9	11.5	16.1	18.6	12.0						
		13.1	106.9	1248	2.1				8.9	11.5	16.1	18.6	12.0						
	PLB 5002	39.5	70.9	1882	0.8	15.0	10.5	160L/2A	10.0	12.8	18.0	20.8	13.5	156	165	148	158	169	370-385
		32.7	85.6	1558	1.2				9.3	11.9	16.7	19.3	12.5						
		28.1	99.6	1339	1.5				8.9	11.5	16.1	18.6	12.0						
		22.5	124.4	1072	2.2				8.5	10.9	15.3	17.7	11.5						
		20.6	135.9	981	2.6				8.1	10.4	14.5	16.8	10.9						
		17.8	157.3	848	2.2				7.8	10.0	14.0	16.2	10.5						
	PLB 2502	12.1	74.4	1793	1.0	12.0	8.4	180L/6A	9.8	12.6	17.6	20.4	13.2	185	194	173	187	198	348-363
	PLB 2502*	15.2	92.1	1448	1.0	12.0	8.4	160L/4A	9.1	11.7	16.4	19.0	12.3	162	171	150	164	175	348-363
		12.1	115.7	1153	1.4				8.5	10.9	15.3	17.7	11.5						
	PLB 2502*	21.3	131.5	1015	0.8	12.0	8.4	160L/2A	8.1	10.4	14.5	16.8	10.9	152	161	140	154	165	348-363
		17.6	159.1	839	1.3				7.8	10.0	14.0	16.2	10.5						
		15.2	184.2	724	1.7				7.4	9.6	13.4	15.5	10.0						
		12.1	231.4	576	2.5				6.9	8.9	12.4	14.4	9.3						
	PLB 1602*	10.4	134.6	991	0.9	8.0	5.6	160L/4A	2.5	3.1	5.5	6.9	4.1	145	147	143	146	150	326-340
	PLB 1602*	12.6	222.2	600	1.3	8.0	5.6	160L/2A	2.2	2.7	4.9	6.1	3.6	135	137	133	136	140	326-340
		10.4	269.2	495	1.5				2.1	2.6	4.6	5.8	3.5						
	PLB 1002*	12.6	222.2	600	0.8	8.0	5.6	160L/2A	2.2	2.7	4.9	6.1	3.6	133	135	131	134	138	304-318
		10.4	269.2	495	1.0				2.1	2.6	4.6	5.8	3.5						
18.50	PLB 90004	663.9	1.4	113017	1.0	30.0	21.0	200L/6B	310.0	432.0	-	-	232.5	919	-	823	845	1093	576-585
		638.5	1.4	108693	0.8				310.0	432.0	-	-	232.5						
		572.4	1.6	97441	1.1				263.5	367.2	-	-	197.6						
		506.9	1.8	86291	1.2				263.5	367.2	-	-	197.6						
		459.6	2.0	78239	1.0				263.5	367.2	-	-	197.6						
		419.7	2.1	71446	1.4				263.5	367.2	-	-	197.6						
		390.0	2.3	66391	1.5				263.5	367.2	-	-	197.6						
		322.9	2.8	54968	1.8				240.3	334.8	-	-	180.2						
		266.3	3.4	45333	2.0				240.3	334.8	-	-	180.2						
		247.4	3.6	42115	2.2				224.8	313.2	-	-	168.6						
	PLB 90004	1010.0	1.4	110529	0.8	30.0	21.0	180M/4B	310.0	432.0	-	-	232.5	876	-	780	802	1050	576-585
		840.3	1.7	91958	0.9				263.5	367.2	-	-	197.6						
		771.2	1.8	84396	1.0				263.5	367.2	-	-	197.6						
		724.4	1.9	79275	1.0				263.5	367.2	-	-	197.6						
		663.9	2.1	72654	1.4				263.5	367.2	-	-	197.6						
		638.5	2.2	69874	1.2				263.5	367.2	-	-	197.6						
		572.4	2.4	62641	1.6				263.5	367.2	-	-	197.6						
		506.9	2.8	55473	1.7				240.3	334.8	-	-	180.2						
		459.6	3.0	50296	1.5				240.3	334.8	-	-	180.2						
		419.7	3.3	45930	2.0				240.3	334.8	-	-	180.2						
		390.0	3.6	42680	2.2				224.8	313.2	-	-	168.6						
		322.9	4.3	35337	2.5				224.8	313.2	-	-	168.6						
		266.3	5.3	29143	3.0				209.3	291.6	-	-	156.9						
	PLB 90004	1010.0	2.8	55265	1.4	30.0	21.0	160L/2C	240.3	334.8	-	-	180.2	842	-	746	768	1016	576-585
		840.3	3.3	45979	1.6				240.3	334.8	-	-	180.2						
		771.2	3.6	42198	1.7				224.8	313.2	-	-	168.6						
		724.4	3.9	39637	1.8				224.8	313.2	-	-	168.6						
		663.9	4.2	36327	2.5				224.8	313.2	-	-	168.6						
		638.5	4.4	34937	2.0				224.8	313.2	-	-	168.6						
		572.4	4.9	31320	2.8				209.3	291.6	-	-	156.9						
		459.6	6.1	25148	2.7				186.0	259.2	-	-	139.5						

* Soğutucu gereklidir / Cooling is required / Kühlung ist erforderlich / È richiesto raffreddamento / Le refroidissement est nécessaire / Se requiere un enfriamiento

P1 (kW)		iges	n2 (rpm)	M2 (Nm)	fs	Pt (20°C) (kW)	Pt (40°C) (kW)	Motor IE2	FR (kN)					~ Kg					mm
									MC	MS	PC	PS	CPC	M...	P...	F	FS	CPC	
18.50	PLB 65004	913.7	1.5	99991	0.8	25.0	17.5	180M/4B	132.6	183.6	-	-	99.5	670	-	608	622	774	556-569
		757.1	1.8	82853	0.9				132.6	183.6	-	-	99.5						
		629.9	2.2	68933	1.0				132.6	183.6	-	-	99.5						
		578.0	2.4	63253	1.1				132.6	183.6	-	-	99.5						
		484.5	2.9	53021	1.3				120.9	167.4	-	-	90.7						
		417.7	3.4	45711	1.4				120.9	167.4	-	-	90.7						
		399.7	3.5	43741	1.5				120.9	167.4	-	-	90.7						
		344.5	4.1	37700	1.7				113.1	156.6	-	-	84.8						
		305.2	4.6	33400	1.9				105.3	145.8	-	-	79.0						
		265.0	5.3	29000	2.1				105.3	145.8	-	-	79.0						
		252.7	5.5	27654	2.2				93.6	129.6	-	-	70.2						
		234.7	6.0	25684	2.3				93.6	129.6	-	-	70.2						
		194.4	7.2	21274	2.7				89.7	124.2	-	-	67.3						
	PLB 65004	578.0	1.6	98394	0.8	25.0	17.5	200L/6B	132.6	183.6	-	-	99.5	713	-	651	665	817	556-569
		484.5	1.9	82478	0.9				132.6	183.6	-	-	99.5						
		417.7	2.2	71106	1.0				132.6	183.6	-	-	99.5						
		399.7	2.3	68042	1.0				132.6	183.6	-	-	99.5						
		344.5	2.6	58645	1.2				120.9	167.4	-	-	90.7						
		305.2	2.9	51955	1.3				120.9	167.4	-	-	90.7						
		265.0	3.4	45112	1.4				120.9	167.4	-	-	90.7						
		252.7	3.6	43018	1.5				113.1	156.6	-	-	84.8						
		234.7	3.8	39954	1.6				113.1	156.6	-	-	84.8						
		194.4	4.6	33093	1.9				105.3	145.8	-	-	79.0						
	PLB 65004	913.7	3.1	49995	1.3	25.0	17.5	160L/2C	120.9	167.4	-	-	90.7	636	-	574	588	740	556-569
		757.1	3.7	41427	1.5				113.1	156.6	-	-	84.8						
		629.9	4.4	34467	1.8				113.1	156.6	-	-	84.8						
		578.0	4.8	31627	1.9				105.3	145.8	-	-	79.0						
		484.5	5.8	26511	2.2				93.6	129.6	-	-	70.2						
		417.7	6.7	22856	2.6				89.7	124.2	-	-	67.3						
		399.7	7.0	21871	2.7				89.7	124.2	-	-	67.3						
		344.5	8.1	18850	3.0				85.8	118.8	-	-	64.4						
	PLB 50004	395.2	2.3	67276	0.9	20.0	14.0	200L/6B	151.3	209.1	-	-	113.5	624	-	566	579	732	536-549
		351.3	2.6	59803	1.0				138.0	190.7	-	-	103.5						
		315.8	2.8	53759	1.1				138.0	190.7	-	-	103.5						
		289.0	3.1	49197	1.2				138.0	190.7	-	-	103.5						
		241.5	3.7	41111	1.4				129.1	178.4	-	-	96.8						
	PLB 50004	506.3	2.8	55407	0.8	20.0	14.0	180M/4B	138.0	190.7	-	-	103.5	581	-	523	536	689	536-549
		455.5	3.1	49848	0.9				138.0	190.7	-	-	103.5						
		395.2	3.5	43249	1.3				129.1	178.4	-	-	96.8						
		351.3	4.0	38445	1.5				129.1	178.4	-	-	96.8						
		315.8	4.4	34560	1.6				129.1	178.4	-	-	96.8						
		289.0	4.8	31627	1.7				120.2	166.1	-	-	90.1						
		241.5	5.8	26429	2.0				106.8	147.6	-	-	80.1						
	PLB 50004	961.2	2.9	52594	0.8	20.0	14.0	160L/2C	138.0	190.7	-	-	103.5	547	-	489	502	655	536-549
		926.1	3.0	50674	0.9				138.0	190.7	-	-	103.5						
		856.4	3.3	46860	0.9				138.0	190.7	-	-	103.5						
		797.5	3.5	43637	1.0				129.1	178.4	-	-	96.8						
		708.7	4.0	38778	1.1				129.1	178.4	-	-	96.8						
		669.0	4.2	36606	1.1				129.1	178.4	-	-	96.8						
		587.6	4.8	32152	1.2				120.2	166.1	-	-	90.1						
		543.4	5.2	29733	1.3				120.2	166.1	-	-	90.1						
		506.3	5.5	27703	1.4				106.8	147.6	-	-	80.1						
		455.5	6.1	24924	1.5				106.8	147.6	-	-	80.1						
		395.2	7.1	21624	2.4				102.4	141.5	-	-	76.8						
		351.3	8.0	19222	2.6				97.9	135.3	-	-	73.4						
		315.8	8.9	17280	2.8				93.5	129.2	-	-	70.1						
	PLB 35004	385.0	3.6	42132	0.8	17.0	11.9	180M/4B	104.4	147.9	-	-	78.3	449	-	413	421	512	516-529
		352.6	4.0	38587	0.9				104.4	147.9	-	-	78.3						
		319.4	4.4	34954	1.0				104.4	147.9	-	-	78.3						
		292.5	4.8	32010	1.0				97.2	137.7	-	-	72.9						
		244.3	5.7	26735	1.2				86.4	122.4	-	-	64.8						
		223.7	6.3	24481	1.3				86.4	122.4	-	-	64.8						
		202.7	6.9	22182	1.4				82.8	117.3	-	-	62.1						
		185.6	7.5	20311	1.5				79.2	112.2	-	-	59.4						
	PLB 35004*	244.3	3.7	31595	0.8	17.0	11.9	200L/6B	104.4	147.9	-	-	78.3	492	-	456	464	555	516-529
		223.7	4.0	34506	0.9				104.4	147.9	-	-	78.3						
		202.7	4.4	38081	1.0				104.4	147.9	-	-	78.3						
		185.6	4.8	41588	1.1				97.2	137.7	-	-	72.9						

* Soğutucu gereklidir / Cooling is required / Kühlung ist erforderlich / È richiesto raffreddamento / Le refroidissement est nécessaire / Se requiere un enfriamiento

P1 (kW)		iges	n2 (rpm)	M2 (Nm)	fs	Pt (20°C) (kW)	Pt (40°C) (kW)	Motor IE2	FR (kN)					~ Kg					mm
									MC	MS	PC	PS	CPC	M...	P...	F	FS	CPC	
18.50	PLB 35004*	658.8	4.3	36048	0.8	17.0	11.9	160L/2C	104.4	147.9	-	-	78.3	415	-	379	387	478	516-529
		591.8	4.7	32382	0.9				97.2	137.7	-	-	72.9						
		542.0	5.2	29657	0.9				97.2	137.7	-	-	72.9						
		452.9	6.2	24782	1.1				86.4	122.4	-	-	64.8						
		414.8	6.8	22697	1.2				82.8	117.3	-	-	62.1						
		385.0	7.3	21066	1.5				82.8	117.3	-	-	62.1						
		352.6	7.9	19293	1.6				79.2	112.2	-	-	59.4						
		319.4	8.8	17477	1.7				75.6	107.1	-	-	56.7						
		292.5	9.6	16005	1.9				72.0	102.0	-	-	54.0						
		244.3	11.5	13367	2.2				72.0	102.0	-	-	54.0						
		223.7	12.5	12240	2.3				67.7	95.9	-	-	50.8						
		202.7	13.8	11091	2.5				67.7	95.9	-	-	50.8						
		185.6	15.1	10156	2.7				67.7	95.9	-	-	50.8						
	PLB 30004*	676.7	4.1	37027	0.8	17.0	11.9	160L/2C	65.3	99.3	-	-	48.9	409	-	368	376	472	496-509
		460.7	6.1	25208	1.0				54.0	82.2	-	-	40.5						
		385.0	7.3	21066	1.2				51.8	78.8	-	-	38.8						
		352.6	7.9	19293	1.3				49.5	75.4	-	-	37.1						
		306.0	9.2	16744	1.5				47.3	71.9	-	-	35.4						
	PLB 30004*	306.0	4.6	33487	0.8	17.0	11.9	180M/4B	60.8	92.5	-	-	45.6	443	-	402	410	506	496-509
	PLB 25004*	304.0	4.6	33268	0.8	15.0	10.5	180M/4B	60.8	92.5	-	-	45.6	412	-	376	384	475	476-489
		285.0	4.9	31189	0.9				60.8	92.5	-	-	45.6						
		252.4	5.5	27621	1.0				54.0	82.2	-	-	40.5						
	PLB 25004*	562.6	5.0	30784	0.9	15.0	10.5	160L/2C	60.8	92.5	-	-	45.6	378	-	342	350	441	476-489
		498.3	5.6	27266	1.0				54.0	82.2	-	-	40.5						
		449.2	6.2	24579	1.1				54.0	82.2	-	-	40.5						
		397.8	7.0	21767	1.2				51.8	78.8	-	-	38.8						
		364.3	7.7	19934	1.3				49.5	75.4	-	-	37.1						
		304.0	9.2	16634	1.5				47.3	71.9	-	-	35.4						
		285.0	9.8	15594	1.6				45.0	68.5	-	-	33.8						
		252.4	11.1	13811	1.7				45.0	68.5	-	-	33.8						
	PLB 18004*	353.6	7.9	19348	0.8	13.0	9.1	160L/2C	33.0	58.3	77.0	102.3	24.8	285	312	254	290	335	452-469
		323.8	8.6	17718	0.8				31.5	55.7	73.5	97.7	23.6						
		281.0	10.0	15376	0.9				30.0	53.0	70.0	93.0	22.5						
		224.4	12.5	12279	1.1				30.0	53.0	70.0	93.0	22.5						
		185.8	15.1	10167	1.3				28.2	49.8	65.8	87.4	21.2						
	PLB 16004*	168.9	8.3	18484	0.9	11.0	7.7	180M/4B	33.0	58.3	77.0	102.3	24.8	294	321	263	299	344	428-445
		140.1	10.0	15332	1.0				30.0	53.0	70.0	93.0	22.5						
	PLB 16004*	320.6	8.7	17542	0.8	11.0	7.7	160L/2C	31.5	55.7	73.5	97.7	23.6	260	287	229	265	310	428-445
		290.4	9.6	15890	0.9				30.0	53.0	70.0	93.0	22.5						
		240.9	11.6	13181	0.8				30.0	53.0	70.0	93.0	22.5						
		230.9	12.1	12634	1.1				30.0	53.0	70.0	93.0	22.5						
		203.5	13.8	11135	1.2				28.2	49.8	65.8	87.4	21.2						
		184.4	15.2	10090	1.3				28.2	49.8	65.8	87.4	21.2						
		168.9	16.6	9242	1.6				28.2	49.8	65.8	87.4	21.2						
		140.1	20.0	7666	1.8				24.9	44.0	58.1	77.2	18.7						
	PLB 10004*	184.4	15.2	10090	0.8	11.0	7.7	160L/2C	30.6	44.7	-	-	22.9	252	-	220	257	302	410-421
		168.9	16.6	9242	1.0				30.6	44.7	-	-	22.9						
		140.1	20.0	7666	1.1				27.0	39.4	-	-	20.2						
	PLB 90003	149.3	6.0	26337	2.6	45.0	31.5	200L/6B	186.0	259.2	-	-	139.5	898	-	802	824	1072	576-585
		124.2	7.2	21910	3.0				178.3	248.4	-	-	133.7						
	PLB 65003	111.9	8.0	19740	2.9	35.0	24.5	200L/6B	85.8	118.8	-	-	64.4	738	-	676	690	842	556-569
	PLB 50003	220.5	4.1	38898	0.8	25.0	17.5	200L/6B	129.1	178.4	-	-	96.8	605	-	486	501	713	536-549
		154.3	5.8	27220	1.4				106.8	147.6	-	-	80.1						
		139.9	6.4	24679	1.2				106.8	147.6	-	-	80.1						
		118.1	7.6	20834	1.8				97.9	135.3	-	-	73.4						
		97.9	9.2	17270	2.1				93.5	129.2	-	-	70.1						
	PLB 50003	220.5	6.3	25006	1.2	25.0	17.5	180M/4B	106.8	147.6	-	-	80.1	562	-	443	458	670	536-549
		154.3	9.1	17498	2.0				93.5	129.2	-	-	70.1						
		139.9	10.0	15865	1.8				89.0	123.0	-	-	66.8						
		118.1	11.9	13393	2.5				89.0	123.0	-	-	66.8						
		97.9	14.3	11102	3.0				83.7	115.6	-	-	62.7						
	PLB 50003	220.5	12.7	12503	2.2	25.0	17.5	160L/2C	83.7	115.6	-	-	62.7	528	-	409	424	636	536-549
	PLB 35003	123.0	7.3	21698	1.2	23.0	16.1	200L/6B	82.8	117.3	-	-	62.1	537	-	500	508	598	516-529
		94.1	9.6	16600	1.5				72.0	102.0	-	-	54.0						
		80.0	11.3	14113	2.1				72.0	102.0	-	-	54.0						
		66.4	13.6	11713	2.4				67.7	95.9	-	-	50.8						
		52.7	17.1	9297	2.9				67.7	95.9	-	-	50.8						
	PLB 35003	123.0	11.4	13949	1.8	23.0	16.1	180M/4B	72.0	102.0	-	-	54.0	494	-	457	465	555	516-529
		94.1	14.9	10671	2.2				67.7	95.9	-	-	50.8						
		80.0	17.5	9072	3.0				67.7	95.9	-	-	50.8						

* Soğutucu gereklidir / Cooling is required / Kühlung ist erforderlich / È richiesto raffreddamento / Le refroidissement est nécessaire / Se requiere un enfriamiento

P1 (kW)		iges	n2 (rpm)	M2 (Nm)	fs	Pt (20°C) (kW)	Pt (40°C) (kW)	Motor IE2	FR (kN)					~ Kg					mm
									MC	MS	PC	PS	CPC	M...	P...	F	FS	CPC	
18.50	PLB 30003	135.9	6.6	23974	0.8	23.0	16.1	200L/6B	51.8	78.8	-	-	38.8	531	-	492	502	592	496-509
		104.5	8.6	18434	1.3				47.3	71.9	-	-	35.4						
		80.0	11.3	14113	1.7				45.0	68.5	-	-	33.8						
		66.4	13.6	11713	2.0				42.3	64.4	-	-	31.7						
		52.7	17.1	9297	2.4				42.3	64.4	-	-	31.7						
	PLB 30003	163.8	8.5	18576	1.0	23.0	16.1	180M/4B	47.3	71.9	-	-	35.4	488	-	449	459	549	496-509
		135.9	10.3	15412	1.2				45.0	68.5	-	-	33.8						
		104.5	13.4	11851	1.9				42.3	64.4	-	-	31.7						
		80.0	17.5	9072	2.4				42.3	64.4	-	-	31.7						
		66.4	21.1	7530	2.8				37.4	56.9	-	-	28.0						
	PLB 30003	163.8	17.1	9288	1.8	23.0	16.1	160L/2C	42.3	64.4	-	-	31.7	454	-	415	425	515	496-509
		135.9	20.6	7706	2.1				37.4	56.9	-	-	28.0						
	PLB 25003	141.6	6.4	24979	0.8	20.0	14.0	200L/6B	54.0	82.2	-	-	40.5	440	-	404	412	503	476-489
		125.4	7.2	22121	0.9				51.8	78.8	-	-	38.8						
		104.2	8.6	18382	1.0				47.3	71.9	-	-	35.4						
		96.4	9.3	17006	1.4				47.3	71.9	-	-	35.4						
		89.8	10.0	15841	1.2				45.0	68.5	-	-	33.8						
		79.6	11.3	14042	1.3				45.0	68.5	-	-	33.8						
		69.1	13.0	12190	1.9				42.3	64.4	-	-	31.7						
		61.2	14.7	10796	2.1				42.3	64.4	-	-	31.7						
		50.7	17.8	8944	2.5				37.4	56.9	-	-	28.0						
	PLB 25003	164.2	8.5	18621	1.0	20.0	14.0	180M/4B	47.3	71.9	-	-	35.4	397	-	361	369	460	476-489
		141.6	9.9	16058	1.2				45.0	68.5	-	-	33.8						
		125.4	11.2	14221	1.3				45.0	68.5	-	-	33.8						
		104.2	13.4	11817	1.5				42.3	64.4	-	-	31.7						
		96.4	14.5	10932	2.1				42.3	64.4	-	-	31.7						
		89.8	15.6	10184	1.7				42.3	64.4	-	-	31.7						
		79.6	17.6	9027	1.9				37.4	56.9	-	-	28.0						
		69.1	20.3	7836	2.7				37.4	56.9	-	-	28.0						
		61.2	22.9	6940	3.0				35.1	53.4	-	-	26.3						
	PLB 25003	238.2	11.8	13506	1.0	20.0	14.0	160L/2C	45.0	68.5	-	-	33.8	363	-	327	335	426	476-489
		197.4	14.2	11193	1.2				42.3	64.4	-	-	31.7						
		164.2	17.1	9310	1.8				42.3	64.4	-	-	31.7						
		141.6	19.8	8029	2.1				37.4	56.9	-	-	28.0						
		125.4	22.3	7110	2.3				37.4	56.9	-	-	28.0						
		104.2	26.9	5908	2.7				35.1	53.4	-	-	26.3						
		89.8	31.2	5092	3.0				33.3	50.7	-	-	25.0						
	PLB 18003*	135.5	10.3	15366	0.9	17.0	11.9	180M/4B	30.0	53.0	70.0	93.0	22.5	317	344	286	322	367	452-469
		116.7	12.0	13234	0.9				30.0	53.0	70.0	93.0	22.5						
		103.3	13.6	11715	1.0				28.2	49.8	65.8	87.4	21.2						
		85.7	16.3	9719	1.3				28.2	49.8	65.8	87.4	21.2						
		71.2	19.7	8074	1.6				24.9	44.0	58.1	77.2	18.7						
		54.4	25.7	6169	2.0				23.4	41.3	54.6	72.5	17.6						
	PLB 18003*	85.7	10.5	15118	0.9	17.0	11.9	200L/6B	30.0	53.0	70.0	93.0	22.5	360	387	329	365	410	452-469
		71.2	12.6	12560	1.1				28.2	49.8	65.8	87.4	21.2						
		54.4	16.5	9597	1.4				28.2	49.8	65.8	87.4	21.2						
	PLB 18003*	163.3	17.1	9259	1.2	17.0	11.9	160L/2C	28.2	49.8	65.8	87.4	21.2	283	310	252	288	333	452-469
		135.5	20.7	7683	1.6				24.9	44.0	58.1	77.2	18.7						
		116.7	24.0	6617	1.6				23.4	41.3	54.6	72.5	17.6						
		103.3	27.1	5857	1.8				23.4	41.3	54.6	72.5	17.6						
		85.7	32.7	4859	2.4				21.0	37.1	49.0	65.1	15.8						
		71.2	39.3	4037	2.8				20.1	35.5	46.9	62.3	15.1						
	PLB 16003*	140.0	10.0	15877	0.8	15.0	10.5	180M/4B	30.0	53.0	70.0	93.0	22.5	311	338	280	316	361	428-445
		120.6	11.6	13677	0.9				30.0	53.0	70.0	93.0	22.5						
		96.2	14.6	10909	1.1				28.2	49.8	65.8	87.4	21.2						
		88.8	15.8	10070	1.1				28.2	49.8	65.8	87.4	21.2						
		76.5	18.3	8675	1.3				24.9	44.0	58.1	77.2	18.7						
		61.1	22.9	6929	1.5				23.4	41.3	54.6	72.5	17.6						
		50.7	27.6	5750	2.1				22.2	39.2	51.8	68.8	16.7						
		46.4	30.2	5262	2.2				22.2	39.2	51.8	68.8	16.7						
	PLB 16003*	88.8	10.1	15665	0.8	15.0	10.5	200L/6B	30.0	53.0	70.0	93.0	22.5	354	381	323	359	404	428-445
		76.5	11.8	13495	0.9				30.0	53.0	70.0	93.0	22.5						
		61.1	14.7	10778	1.1				28.2	49.8	65.8	87.4	21.2						
		50.7	17.8	8944	1.4				24.9	44.0	58.1	77.2	18.7						
		46.4	19.4	8185	1.5				24.9	44.0	58.1	77.2	18.7						

* Soğutucu gereklidir / Cooling is required / Kühlung ist erforderlich / È richiesto raffreddamento / Le refroidissement est nécessaire / Se requiere un enfriamiento

P1 (kW)		iges	n2 (rpm)	M2 (Nm)	fs	Pt (20°C) (kW)	Pt (40°C) (kW)	Motor IE2	FR (kN)					~ Kg					mm
									MC	MS	PC	PS	CPC	M...	P...	F	FS	CPC	
18.50	PLB 16003*	182.9	15.3	10371	0.9	15.0	10.5	160L/2C	28.2	49.8	65.8	87.4	21.2	277	304	246	282	327	428-445
		157.5	17.8	8931	1.0				24.9	44.0	58.1	77.2	18.7						
		140.0	20.0	7938	1.4				24.9	44.0	58.1	77.2	18.7						
		125.8	22.3	7133	1.2				24.9	44.0	58.1	77.2	18.7						
		120.6	23.2	6838	1.6				23.4	41.3	54.6	72.5	17.6						
		116.1	24.1	6583	1.2				23.4	41.3	54.6	72.5	17.6						
		96.2	29.1	5455	1.9				22.2	39.2	51.8	68.8	16.7						
		88.8	31.5	5035	2.0				22.2	39.2	51.8	68.8	16.7						
		76.5	36.6	4338	2.3				21.0	37.1	49.0	65.1	15.8						
		61.1	45.8	3464	2.7				19.5	34.5	45.5	60.5	14.6						
	PLB 10003*	88.8	15.8	10070	0.8	15.0	10.5	180M/4B	30.6	44.7	-	-	22.9	303	-	271	308	353	410-421
		73.1	19.2	8290	1.0				27.0	39.4	-	-	20.2						
		61.1	22.9	6929	1.0				25.4	37.1	-	-	19.0						
		50.7	27.6	5750	1.4				24.1	35.2	-	-	18.0						
		46.4	30.2	5262	1.5				24.1	35.2	-	-	18.0						
	PLB 10003*	50.7	17.8	8944	1.0	15.0	10.5	200L/6B	27.0	39.4	-	-	20.2	346	-	314	351	396	410-421
		46.4	19.4	8185	1.0				27.0	39.4	-	-	20.2						
	PLB 10003*	140.0	20.0	7938	0.9	15.0	10.5	160L/2C	27.0	39.4	-	-	20.2	269	-	237	274	319	410-421
		125.8	22.3	7133	0.8				27.0	39.4	-	-	20.2						
		120.6	23.2	6838	1.0				25.4	37.1	-	-	19.0						
		116.1	24.1	6583	0.8				25.4	37.1	-	-	19.0						
		96.2	29.1	5455	1.3				24.1	35.2	-	-	18.0						
		88.8	31.5	5035	1.4				24.1	35.2	-	-	18.0						
		73.1	38.3	4145	1.9				21.8	31.8	-	-	16.3						
		61.1	45.8	3464	1.8				21.1	30.9	-	-	15.8						
		50.7	55.2	2875	2.5				20.2	29.5	-	-	15.1						
		46.4	60.3	2631	2.7				19.2	28.0	-	-	14.4						
	PLB 7003*	94.2	29.7	5341	0.8	14.0	9.8	160L/2C	-	-	42.6	51.1	31.9	-	209	191	212	226	392-403
		77.9	35.9	4417	0.9				-	-	40.3	48.3	30.2						
		67.1	41.7	3805	1.0				-	-	38.5	46.2	28.9						
		60.5	46.3	3430	1.0				-	-	37.4	44.9	28.0						
		55.6	50.4	3153	1.2				-	-	36.8	44.2	27.6						
		53.6	52.2	3039	1.2				-	-	36.8	44.2	27.6						
	PLB 5003*	47.5	58.9	2693	1.1	10.0	7.0	160L/2C	10.3	13.3	18.6	21.5	13.9	174	183	165	176	187	370-385
		39.4	71.1	2234	1.3				10.0	12.8	18.0	20.8	13.5						
	PLB 2503*	47.5	58.9	2693	0.8	8.0	5.6	160L/2C	10.3	13.3	18.6	21.5	13.9	168	177	160	170	181	348-363
		39.4	71.1	2234	0.9				10.0	12.8	18.0	20.8	13.5						
	PLB 25002	29.2	30.8	5338	2.2	30.0	21.0	200L/6B	33.3	50.7	-	-	25.0	472	-	435	443	535	476-489
	PLB 18002	20.0	45.0	3656	2.6	25.0	17.5	200L/6B	19.5	34.5	45.5	60.5	14.6	390	417	359	395	440	452-469
	PLB 16002	36.7	24.5	6709	0.9	23.0	16.1	200L/6B	23.4	41.3	54.6	72.5	17.6	335	362	304	340	385	428-445
		30.5	29.5	5576	1.4				22.2	39.2	51.8	68.8	16.7						
		23.3	38.6	4259	1.3				20.1	35.5	46.9	62.3	15.1						
		19.3	46.6	3528	2.1				19.5	34.5	45.5	60.5	14.6						
	PLB 16002	36.7	38.1	4313	2.9	23.0	16.1	180M/4B	20.1	35.5	46.9	62.3	15.1	292	319	261	297	342	428-445
		30.5	45.9	3584	1.9				19.5	34.5	45.5	60.5	14.6						
		23.3	60.1	2738	2.0				17.7	31.3	41.3	54.9	13.3						
		19.3	72.5	2268	1.3				16.8	29.7	39.2	52.1	12.6						
	PLB 16002	36.7	76.3	2156	2.4	23.0	16.1	160L/2C	16.8	29.7	39.2	52.1	12.6	258	285	227	263	308	428-445
	PLB 10002	30.5	29.5	5576	1.0	23.0	16.1	200L/6B	24.1	35.2	-	-	18.0	327	-	295	332	377	410-421
		23.3	38.6	4259	0.9				21.8	31.8	-	-	16.3						
		19.3	46.6	3528	1.4				21.1	30.9	-	-	15.8						
		14.8	60.8	2706	2.2				19.2	28.0	-	-	14.4						
		12.3	73.2	2248	3.0				18.2	26.6	-	-	13.7						
	PLB 10002	36.7	38.1	4313	0.9	23.0	16.1	180M/4B	21.8	31.8	-	-	16.3	284	-	252	289	334	410-421
		30.5	45.9	3584	1.4				21.1	30.9	-	-	15.8						
		23.3	60.1	2738	1.3				19.2	28.0	-	-	14.4						
		19.3	72.5	2268	2.0				18.2	26.6	-	-	13.7						
	PLB 10002	36.7	76.3	2156	1.6	23.0	16.1	160L/2C	18.2	26.6	-	-	13.7	250	-	218	255	300	410-421
		30.5	91.8	1792	2.5				16.9	24.7	-	-	12.7						
		23.3	120.2	1369	2.3				15.8	23.0	-	-	11.8						
	PLB 7002*	24.1	37.3	4406	0.9	18.0	12.6	200L/6B	-	-	40.3	48.3	30.2	-	297	278	300	313	392-403
		20.0	45.0	3656	0.8				-	-	37.4	44.9	28.0						
		17.3	52.0	3163	1.0				-	-	36.8	44.2	27.6						
		15.3	58.8	2797	1.3				-	-	33.9	40.7	25.4						
		12.7	70.9	2322	1.7				-	-	32.8	39.3	24.6						

* Soğutucu gereklidir / Cooling is required / Kühlung ist erforderlich / È richiesto raffreddamento / Le refroidissement est nécessaire / Se requiere un enfriamiento

P1 (kW)		iges	n2 (rpm)	M2 (Nm)	fs	Pt (20°C) (kW)	Pt (40°C) (kW)	Motor IE2	FR (kN) MC	MS	PC	PS	CPC	~ Kg M…	P…	F	FS	CPC	mm
18.50	PLB 7002*	31.6	44.3	3714	0.8	18.0	12.6	180M/4B	-	-	37.4	44.9	28.0	-	254	235	257	270	392-403
		27.2	51.5	3196	1.0				-	-	36.8	44.2	27.6						
		24.1	58.1	2832	1.3				-	-	33.9	40.7	25.4						
		20.0	70.0	2350	1.1				-	-	32.8	39.3	24.6						
		17.3	80.9	2033	1.5				-	-	31.1	37.3	23.3						
		15.3	91.5	1798	1.9				-	-	29.9	35.9	22.4						
		12.7	110.2	1492	2.4				-	-	27.9	33.5	20.9						
	PLB 7002*	38.1	73.5	2239	1.0	18.0	12.6	160L/2C	-	-	32.2	38.6	24.2	-	220	201	223	236	392-403
		31.6	88.6	1857	1.4				-	-	29.9	35.9	22.4						
		27.2	102.9	1598	1.8				-	-	29.3	35.2	22.0						
		24.1	116.2	1416	2.3				-	-	27.9	33.5	20.9						
		20.0	140.0	1175	2.0				-	-	26.5	31.7	19.8						
		17.3	161.8	1017	2.7				-	-	25.6	30.7	19.2						
	PLB 5002*	20.6	43.7	3766	0.8	15.0	10.5	200L/6B	11.4	14.6	20.5	23.7	15.4	243	252	235	245	256	370-385
		14.2	63.4	2596	1.0				10.2	13.1	18.3	21.2	13.7						
		13.1	68.7	2395	1.2				10.0	12.8	18.0	20.8	13.5						
	PLB 5002*	22.5	62.2	2644	1.0	15.0	10.5	180M/4B	10.3	13.3	18.6	21.5	13.9	200	209	192	202	213	370-385
		20.6	68.0	2421	1.2				10.0	12.8	18.0	20.8	13.5						
		17.8	78.7	2092	1.0				9.5	12.2	17.0	19.7	12.8						
		14.2	98.6	1669	1.5				8.9	11.5	16.1	18.6	12.0						
		13.1	106.9	1539	1.7				8.9	11.5	16.1	18.6	12.0						
	PLB 5002*	32.7	85.6	1921	0.9	15.0	10.5	160L/2C	9.3	11.9	16.7	19.3	12.5	166	175	158	168	179	370-385
		28.1	99.6	1651	1.2				8.9	11.5	16.1	18.6	12.0						
		22.5	124.4	1322	1.8				8.5	10.9	15.3	17.7	11.5						
		20.6	135.9	1210	2.1				8.1	10.4	14.5	16.8	10.9						
		17.8	157.3	1046	1.8				7.8	10.0	14.0	16.2	10.5						
		14.2	197.2	834	2.6				7.3	9.3	13.1	15.1	9.8						
	PLB 2502*	12.1	74.4	2212	0.8	12.0	8.4	200L/6B	9.8	12.6	17.6	20.4	13.2	239	248	227	241	252	348-363
	PLB 2502	15.2	92.1	1786	0.8	12.0	8.4	180M/4B	9.1	11.7	16.4	19.0	12.3	196	205	184	198	209	348-363
		12.1	115.7	1422	1.2				8.5	10.9	15.3	17.7	11.5						
	PLB 2502*	17.6	159.1	1034	1.0	12.0	8.4	160L/2C	7.8	10.0	14.0	16.2	10.5	162	171	150	164	175	348-363
		15.2	184.2	893	1.4				7.4	9.6	13.4	15.5	10.0						
		12.1	231.4	711	2.0				6.9	8.9	12.4	14.4	9.3						
	PLB 1602*	12.6	222.2	740	1.1	8.0	5.6	160L/2C	2.2	2.7	4.9	6.1	3.6	145	147	143	146	150	326-340
		10.4	269.2	611	1.2				2.1	2.6	4.6	5.8	3.5						
	PLB 1002*	10.4	269.2	611	0.8	8.0	5.6	160L/2C	2.1	2.6	4.6	5.8	3.5	143	145	141	144	148	304-318
22.00	PLB 90004	663.9	1.4	134399	0.8	30.0	21.0	200L/6C	310.0	432.0	-	-	232.5	931	-	835	857	1105	576-585
		572.4	1.6	115876	0.9				263.5	367.2	-	-	197.6						
		506.9	1.8	102616	1.0				263.5	367.2	-	-	197.6						
		459.6	2.0	93041	0.9				263.5	367.2	-	-	197.6						
		419.7	2.1	84963	1.2				263.5	367.2	-	-	197.6						
		390.0	2.3	78951	1.3				263.5	367.2	-	-	197.6						
		322.9	2.8	65367	1.5				240.3	334.8	-	-	180.2						
		266.3	3.4	53909	1.7				240.3	334.8	-	-	180.2						
		247.4	3.6	50083	1.8				224.8	313.2	-	-	168.6						
	PLB 90004	840.3	1.7	109356	0.8	30.0	21.0	180L/4B	263.5	367.2	-	-	197.6	885	-	789	811	1059	576-585
		771.2	1.8	100363	0.8				263.5	367.2	-	-	197.6						
		724.4	1.9	94273	0.9				263.5	367.2	-	-	197.6						
		663.9	2.1	86399	1.2				263.5	367.2	-	-	197.6						
		638.5	2.2	83094	1.0				263.5	367.2	-	-	197.6						
		572.4	2.4	74492	1.3				263.5	367.2	-	-	197.6						
		506.9	2.8	65967	1.5				240.3	334.8	-	-	180.2						
		459.6	3.0	59812	1.3				240.3	334.8	-	-	180.2						
		419.7	3.3	54619	1.7				240.3	334.8	-	-	180.2						
		390.0	3.6	50754	1.8				224.8	313.2	-	-	168.6						
		322.9	4.3	42022	2.1				224.8	313.2	-	-	168.6						
		266.3	5.3	34656	2.5				209.3	291.6	-	-	156.9						
		247.4	5.7	32196	2.7				186.0	259.2	-	-	139.5						
	PLB 90004	1010.0	2.8	65720	1.2	30.0	21.0	180M/2A	240.3	334.8	-	-	180.2	862	-	766	788	1036	576-585
		840.3	3.3	54678	1.4				240.3	334.8	-	-	180.2						
		771.2	3.6	50182	1.5				224.8	313.2	-	-	168.6						
		724.4	3.9	47136	1.5				224.8	313.2	-	-	168.6						
		663.9	4.2	43200	2.1				224.8	313.2	-	-	168.6						
		638.5	4.4	41547	1.7				224.8	313.2	-	-	168.6						
		572.4	4.9	37246	2.3				209.3	291.6	-	-	156.9						
		506.9	5.5	32984	2.6				186.0	259.2	-	-	139.5						
		459.6	6.1	29906	2.3				186.0	259.2	-	-	139.5						

* Soğutucu gereklidir / Cooling is required / Kühlung ist erforderlich / È richiesto raffreddamento / Le refroidissement est nécessaire / Se requiere un enfriamiento

P1 (kW)		iges	n2 (rpm)	M2 (Nm)	fs	Pt (20°C) (kW)	Pt (40°C) (kW)	Motor IE2	FR (kN) MC	MS	PC	PS	CPC	~ Kg M…	P…	F	FS	CPC	mm
22.00	PLB 65004	417.7	2.2	84559	0.8	25.0	17.5	200L/6C	132.6	183.6	-	-	99.5	725	-	663	677	829	556-569
		399.7	2.3	80915	0.9				132.6	183.6	-	-	99.5						
		344.5	2.6	69740	1.0				120.9	167.4	-	-	90.7						
		305.2	2.9	61784	1.1				120.9	167.4	-	-	90.7						
		265.0	3.4	53646	1.2				120.9	167.4	-	-	90.7						
		252.7	3.6	51156	1.3				113.1	156.6	-	-	84.8						
		234.7	3.8	47512	1.3				113.1	156.6	-	-	84.8						
		194.4	4.6	39354	1.6				105.3	145.8	-	-	79.0						
	PLB 65004	629.9	2.2	81975	0.9	25.0	17.5	180L/4B	132.6	183.6	-	-	99.5	679	-	617	631	783	556-569
		578.0	2.4	75220	0.9				132.6	183.6	-	-	99.5						
		484.5	2.9	63052	1.1				120.9	167.4	-	-	90.7						
		417.7	3.4	54359	1.2				120.9	167.4	-	-	90.7						
		399.7	3.5	52017	1.2				120.9	167.4	-	-	90.7						
		344.5	4.1	44833	1.4				113.1	156.6	-	-	84.8						
		305.2	4.6	39718	1.6				105.3	145.8	-	-	79.0						
		265.0	5.3	34487	1.8				105.3	145.8	-	-	79.0						
		252.7	5.5	32886	1.8				93.6	129.6	-	-	70.2						
		234.7	6.0	30544	1.9				93.6	129.6	-	-	70.2						
		194.4	7.2	25299	2.3				89.7	124.2	-	-	67.3						
	PLB 65004	913.7	3.1	59454	1.1	25.0	17.5	180M/2A	120.9	167.4	-	-	90.7	656	-	594	608	760	556-569
		757.1	3.7	49264	1.3				113.1	156.6	-	-	84.8						
		629.9	4.4	40987	1.5				113.1	156.6	-	-	84.8						
		578.0	4.8	37610	1.6				105.3	145.8	-	-	79.0						
		484.5	5.8	31526	1.9				93.6	129.6	-	-	70.2						
		417.7	6.7	27180	2.1				89.7	124.2	-	-	67.3						
		399.7	7.0	26008	2.2				89.7	124.2	-	-	67.3						
		344.5	8.1	22416	2.5				85.8	118.8	-	-	64.4						
		305.2	9.2	19859	2.8				81.9	113.4	-	-	61.4						
	PLB 50004*	395.2	2.3	80004	0.8	20.0	14.0	200L/6C	151.3	209.1	-	-	113.5	636	-	578	591	744	536-549
		351.3	2.6	71117	0.8				138.0	190.7	-	-	103.5						
		315.8	2.8	63930	0.9				138.0	190.7	-	-	103.5						
		289.0	3.1	58505	1.0				138.0	190.7	-	-	103.5						
		241.5	3.7	48889	1.1				129.1	178.4	-	-	96.8						
	PLB 50004*	395.2	3.5	51431	1.1	20.0	14.0	180L/4B	129.1	178.4	-	-	96.8	590	-	532	545	698	536-549
		351.3	4.0	45718	1.2				129.1	178.4	-	-	96.8						
		315.8	4.4	41098	1.3				129.1	178.4	-	-	96.8						
		289.0	4.8	37610	1.4				120.2	166.1	-	-	90.1						
		241.5	5.8	31429	1.7				106.8	147.6	-	-	80.1						
	PLB 50004*	856.4	3.3	55725	0.8	20.0	14.0	180M/2A	138.0	190.7	-	-	103.5	567	-	509	522	675	536-549
		797.5	3.5	51893	0.8				129.1	178.4	-	-	96.8						
		708.7	4.0	46115	0.9				129.1	178.4	-	-	96.8						
		669.0	4.2	43531	0.9				129.1	178.4	-	-	96.8						
		587.6	4.8	38235	1.0				120.2	166.1	-	-	90.1						
		543.4	5.2	35359	1.1				120.2	166.1	-	-	90.1						
		506.3	5.5	32945	1.2				106.8	147.6	-	-	80.1						
		455.5	6.1	29639	1.3				106.8	147.6	-	-	80.1						
		395.2	7.1	25715	2.0				102.4	141.5	-	-	76.8						
		351.3	8.0	22859	2.2				97.9	135.3	-	-	73.4						
		315.8	8.9	20549	2.4				93.5	129.2	-	-	70.1						
		289.0	9.7	18805	2.6				89.0	123.0	-	-	66.8						
		241.5	11.6	15714	3.0				89.0	123.0	-	-	66.8						
	PLB 35004*	223.7	4.0	45285	0.8	17.0	11.9	200L/6C	104.4	147.9	-	-	78.3	504	-	468	476	567	516-529
		202.7	4.4	41034	0.8				104.4	147.9	-	-	78.3						
		185.6	4.8	37573	0.9				97.2	137.7	-	-	72.9						
	PLB 35004*	352.6	4.0	45887	0.8	17.0	11.9	180L/4B	104.4	147.9	-	-	78.3	458	-	422	430	521	516-529
		319.4	4.4	41566	0.8				104.4	147.9	-	-	78.3						
		292.5	4.8	38066	0.9				97.2	137.7	-	-	72.9						
		244.3	5.7	31793	1.0				86.4	122.4	-	-	64.8						
		223.7	6.3	29112	1.1				86.4	122.4	-	-	64.8						
		202.7	6.9	26379	1.2				82.8	117.3	-	-	62.1						
		185.6	7.5	24154	1.3				79.2	112.2	-	-	59.4						
	PLB 35004*	542.0	5.2	35268	0.8	17.0	11.9	180M/2A	97.2	137.7	-	-	72.9	435	-	399	407	498	516-529
		452.9	6.2	29470	0.9				86.4	122.4	-	-	64.8						
		414.8	6.8	26991	1.0				82.8	117.3	-	-	62.1						
		385.0	7.3	25052	1.2				82.8	117.3	-	-	62.1						
		352.6	7.9	22943	1.3				79.2	112.2	-	-	59.4						
		319.4	8.8	20783	1.4				75.6	107.1	-	-	56.7						
		292.5	9.6	19033	1.6				72.0	102.0	-	-	54.0						
		244.3	11.5	15896	1.8				72.0	102.0	-	-	54.0						
		223.7	12.5	14556	2.0				67.7	95.9	-	-	50.8						
		202.7	13.8	13190	2.1				67.7	95.9	-	-	50.8						
		185.6	15.1	12077	2.3				67.7	95.9	-	-	50.8						

* Soğutucu gereklidir / Cooling is required / Kühlung ist erforderlich / È richiesto raffreddamento / Le refroidissement est nécessaire / Se requiere un enfriamiento

P1 (kW)		iges	n2 (rpm)	M2 (Nm)	fs	Pt (20°C) (kW)	Pt (40°C) (kW)	Motor IE2	FR (kN)					~ Kg					mm
									MC	MS	PC	PS	CPC	M...	P...	F	FS	CPC	
22.00	PLB 30004*	460.7	6.1	29978	0.9	17.0	11.9	180M/2A	54.0	82.2	-	-	40.5	429	-	388	396	492	496-509
		385.0	7.3	25052	1.0				51.8	78.8	-	-	38.8						
		352.6	7.9	22943	1.1				49.5	75.4	-	-	37.1						
		306.0	9.2	19911	1.2				47.3	71.9	-	-	35.4						
	PLB 25004*	252.4	5.5	32847	0.8	15.0	10.5	180L/4B	54.0	82.2	-	-	40.5	421	-	385	393	484	476-489
	PLB 25004*	498.3	5.6	32424	0.8	15.0	10.5	180M/2A	54.0	82.2	-	-	40.5	398	-	362	370	461	476-489
		449.2	6.2	29229	0.9				54.0	82.2	-	-	40.5						
		397.8	7.0	25885	1.0				51.8	78.8	-	-	38.8						
		364.3	7.7	23705	1.1				49.5	75.4	-	-	37.1						
		304.0	9.2	19781	1.2				47.3	71.9	-	-	35.4						
		285.0	9.8	18545	1.3				45.0	68.5	-	-	33.8						
		252.4	11.1	16424	1.5				45.0	68.5	-	-	33.8						
	PLB 18004*	281.0	10.0	18285	0.8	13.0	9.1	180M/2A	30.0	53.0	70.0	93.0	22.5	305	332	274	310	355	452-469
		224.4	12.5	14602	0.9				30.0	53.0	70.0	93.0	22.5						
		185.8	15.1	12090	1.1				28.2	49.8	65.8	87.4	21.2						
	PLB 16004*	168.9	8.3	21980	0.8	11.0	7.7	180L/4B	33.0	58.3	77.0	102.3	24.8	303	330	272	308	353	428-445
		140.1	10.0	18232	0.9				30.0	53.0	70.0	93.0	22.5						
	PLB 16004*	230.9	12.1	15025	0.9	11.0	7.7	180M/2A	30.0	53.0	70.0	93.0	22.5	280	307	249	285	330	428-445
		203.5	13.8	13242	1.0				28.2	49.8	65.8	87.4	21.2						
		184.4	15.2	11999	1.1				28.2	49.8	65.8	87.4	21.2						
		168.9	16.6	10990	1.3				28.2	49.8	65.8	87.4	21.2						
		140.1	20.0	9116	1.5				24.9	44.0	58.1	77.2	18.7						
	PLB 10004*	168.9	16.6	10990	0.8	11.0	7.7	180M/2A	30.6	44.7	-	-	22.9	272	-	240	277	322	410-421
		140.1	20.0	9116	0.9				27.0	39.4	-	-	20.2						
	PLB 90003	149.3	6.0	31320	2.2	45.0	31.5	200L/6C	186.0	259.2	-	-	139.5	910	-	814	836	1084	576-585
		124.2	7.2	26055	2.5				178.3	248.4	-	-	133.7						
	PLB 65003	111.9	8.0	23474	2.4	35.0	24.5	200L/6C	85.8	118.8	-	-	64.4	750	-	688	702	854	556-569
		93.1	9.7	19531	2.8				78.0	108.0	-	-	58.5						
	PLB 50003	154.3	5.8	32369	1.2	25.0	17.5	200L/6C	106.8	147.6	-	-	80.1	617	-	498	513	725	536-549
		139.9	6.4	29348	1.0				106.8	147.6	-	-	80.1						
		118.1	7.6	24775	1.5				97.9	135.3	-	-	73.4						
		97.9	9.2	20538	1.7				93.5	129.2	-	-	70.1						
		76.5	11.8	16048	2.9				89.0	123.0	-	-	66.8						
	PLB 50003	220.5	6.3	29736	1.0	25.0	17.5	180L/4B	106.8	147.6	-	-	80.1	571	-	452	467	679	536-549
		154.3	9.1	20809	1.7				93.5	129.2	-	-	70.1						
		139.9	10.0	18867	1.5				89.0	123.0	-	-	66.8						
		118.1	11.9	15927	2.1				89.0	123.0	-	-	66.8						
		97.9	14.3	13203	2.5				83.7	115.6	-	-	62.7						
	PLB 50003	220.5	12.7	14868	1.8	25.0	17.5	180M/2A	83.7	115.6	-	-	62.7	548	-	429	444	656	536-549
		139.9	20.0	9433	2.6				73.9	102.1	-	-	55.4						
	PLB 35003	123.0	7.3	25803	1.0	23.0	16.1	200L/6C	82.8	117.3	-	-	62.1	549	-	512	520	610	516-529
		94.1	9.6	19740	1.3				72.0	102.0	-	-	54.0						
		80.0	11.3	16782	1.7				72.0	102.0	-	-	54.0						
		66.4	13.6	13929	2.0				67.7	95.9	-	-	50.8						
		52.7	17.1	11055	2.4				67.7	95.9	-	-	50.8						
		43.7	20.6	9167	2.8				59.8	84.7	-	-	44.8						
	PLB 35003	123.0	11.4	16588	1.5	23.0	16.1	180L/4B	72.0	102.0	-	-	54.0	503	-	466	474	564	516-529
		94.1	14.9	12690	1.9				67.7	95.9	-	-	50.8						
		80.0	17.5	10789	2.5				67.7	95.9	-	-	50.8						
		66.4	21.1	8955	2.9				59.8	84.7	-	-	44.8						
	PLB 35003	123.0	22.8	8294	2.6	23.0	16.1	180M/2A	56.2	79.6	-	-	42.1	480	-	443	451	541	516-529
	PLB 30003	163.8	8.5	22090	0.9	23.0	16.1	180L/4B	47.3	71.9	-	-	35.4	497	-	458	468	558	496-509
		135.9	10.3	18327	1.0				45.0	68.5	-	-	33.8						
		104.5	13.4	14093	1.6				42.3	64.4	-	-	31.7						
		80.0	17.5	10789	2.1				42.3	64.4	-	-	31.7						
		66.4	21.1	8955	2.4				37.4	56.9	-	-	28.0						
		52.7	26.6	7107	2.9				35.1	53.4	-	-	26.3						
	PLB 30003	104.5	8.6	21922	1.1	23.0	16.1	200L/6C	47.3	71.9	-	-	35.4	543	-	504	514	604	496-509
		80.0	11.3	16782	1.4				45.0	68.5	-	-	33.8						
		66.4	13.6	13929	1.7				42.3	64.4	-	-	31.7						
		52.7	17.1	11055	2.0				42.3	64.4	-	-	31.7						
	PLB 30003	163.8	17.1	11045	1.5	23.0	16.1	180M/2A	42.3	64.4	-	-	31.7	474	-	435	445	535	496-509
		135.9	20.6	9164	1.8				37.4	56.9	-	-	28.0						
		104.5	26.8	7046	2.9				35.1	53.4	-	-	26.3						

* Soğutucu gereklidir / Cooling is required / Kühlung ist erforderlich / È richiesto raffreddamento / Le refroidissement est nécessaire / Se requiere un enfriamiento

P1 (kW)		iges	n2 (rpm)	M2 (Nm)	fs	Pt (20°C) (kW)	Pt (40°C) (kW)	Motor IE2	FR (kN) MC	MS	PC	PS	CPC	~ Kg M…	P…	F	FS	CPC	mm
22.00	PLB 25003*	125.4	7.2	26306	0.8	20.0	14.0	200L/6C	51.8	78.8	-	-	38.8	452	-	416	424	515	476-489
		104.2	8.6	21859	0.9				47.3	71.9	-	-	35.4						
		96.4	9.3	20223	1.2				47.3	71.9	-	-	35.4						
		89.8	10.0	18838	1.0				45.0	68.5	-	-	33.8						
		79.6	11.3	16699	1.1				45.0	68.5	-	-	33.8						
		69.1	13.0	14496	1.6				42.3	64.4	-	-	31.7						
		61.2	14.7	12839	1.8				42.3	64.4	-	-	31.7						
		50.7	17.8	10636	2.1				37.4	56.9	-	-	28.0						
	PLB 25003*	164.2	8.5	22144	0.9	20.0	14.0	180L/4B	47.3	71.9	-	-	35.4	406	-	370	378	469	476-489
		141.6	9.9	19096	1.0				45.0	68.5	-	-	33.8						
		125.4	11.2	16911	1.1				45.0	68.5	-	-	33.8						
		104.2	13.4	14052	1.3				42.3	64.4	-	-	31.7						
		96.4	14.5	13000	1.7				42.3	64.4	-	-	31.7						
		89.8	15.6	12110	1.4				42.3	64.4	-	-	31.7						
		79.6	17.6	10735	1.6				37.4	56.9	-	-	28.0						
		69.1	20.3	9319	2.3				37.4	56.9	-	-	28.0						
		61.2	22.9	8253	2.5				35.1	53.4	-	-	26.3						
		50.7	27.6	6837	3.0				33.3	50.7	-	-	25.0						
	PLB 25003*	238.2	11.8	16062	0.9	20.0	14.0	180M/2A	45.0	68.5	-	-	33.8	383	-	347	355	446	476-489
		197.4	14.2	13311	1.0				42.3	64.4	-	-	31.7						
		164.2	17.1	11072	1.5				42.3	64.4	-	-	31.7						
		141.6	19.8	9548	1.7				37.4	56.9	-	-	28.0						
		125.4	22.3	8456	1.9				37.4	56.9	-	-	28.0						
		104.2	26.9	7026	2.3				35.1	53.4	-	-	26.3						
		89.8	31.2	6055	2.5				33.3	50.7	-	-	25.0						
		79.6	35.2	5367	2.8				31.5	48.0	-	-	23.6						
	PLB 18003*	135.5	10.3	18273	0.8	17.0	11.9	180L/4B	30.0	53.0	70.0	93.0	22.5	326	353	295	331	376	452-469
		116.7	12.0	15738	0.8				30.0	53.0	70.0	93.0	22.5						
		103.3	13.6	13931	0.8				28.2	49.8	65.8	87.4	21.2						
		85.7	16.3	11557	1.1				28.2	49.8	65.8	87.4	21.2						
		71.2	19.7	9602	1.3				24.9	44.0	58.1	77.2	18.7						
		54.4	25.7	7336	1.6				23.4	41.3	54.6	72.5	17.6						
	PLB 18003*	85.7	10.5	17978	0.8	17.0	11.9	200L/6C	30.0	53.0	70.0	93.0	22.5	372	399	341	377	422	452-469
		71.2	12.6	14936	0.9				28.2	49.8	65.8	87.4	21.2						
		54.4	16.5	11412	1.1				28.2	49.8	65.8	87.4	21.2						
	PLB 18003*	163.3	17.1	11011	1.0	17.0	11.9	180M/2A	28.2	49.8	65.8	87.4	21.2	303	330	272	308	353	452-469
		135.5	20.7	9137	1.4				24.9	44.0	58.1	77.2	18.7						
		116.7	24.0	7869	1.3				23.4	41.3	54.6	72.5	17.6						
		103.3	27.1	6965	1.5				23.4	41.3	54.6	72.5	17.6						
		85.7	32.7	5779	2.0				21.0	37.1	49.0	65.1	15.8						
		71.2	39.3	4801	2.4				20.1	35.5	46.9	62.3	15.1						
		54.4	51.5	3668	2.9				19.2	33.9	44.8	59.5	14.4						
	PLB 16003*	96.2	14.6	12973	0.9	15.0	10.5	180L/4B	28.2	49.8	65.8	87.4	21.2	320	347	289	325	370	428-445
		88.8	15.8	11975	1.0				28.2	49.8	65.8	87.4	21.2						
		76.5	18.3	10317	1.1				24.9	44.0	58.1	77.2	18.7						
		61.1	22.9	8240	1.3				23.4	41.3	54.6	72.5	17.6						
		50.7	27.6	6837	1.7				22.2	39.2	51.8	68.8	16.7						
		46.4	30.2	6257	1.9				22.2	39.2	51.8	68.8	16.7						
	PLB 16003*	61.1	14.7	12818	0.9	15.0	10.5	200L/6C	28.2	49.8	65.8	87.4	21.2	366	393	335	371	416	428-445
		50.7	17.8	10636	1.2				24.9	44.0	58.1	77.2	18.7						
		46.4	19.4	9734	1.3				24.9	44.0	58.1	77.2	18.7						
	PLB 16003*	157.5	17.8	10620	0.8	15.0	10.5	180M/2A	24.9	44.0	58.1	77.2	18.7	297	324	266	302	347	428-445
		140.0	20.0	9440	1.2				24.9	44.0	58.1	77.2	18.7						
		125.8	22.3	8483	1.0				24.9	44.0	58.1	77.2	18.7						
		120.6	23.2	8132	1.3				23.4	41.3	54.6	72.5	17.6						
		116.1	24.1	7829	1.0				23.4	41.3	54.6	72.5	17.6						
		96.2	29.1	6487	1.6				22.2	39.2	51.8	68.8	16.7						
		88.8	31.5	5988	1.7				22.2	39.2	51.8	68.8	16.7						
		76.5	36.6	5158	1.9				21.0	37.1	49.0	65.1	15.8						
		61.1	45.8	4120	2.3				19.5	34.5	45.5	60.5	14.6						
	PLB 10003*	50.7	17.8	10636	0.8	15.0	10.5	200L/6C	27.0	39.4	-	-	20.2	358	-	326	363	408	410-421
		46.4	19.4	9734	0.9				27.0	39.4	-	-	20.2						
	PLB 10003*	73.1	19.2	9858	0.9	15.0	10.5	180L/4B	27.0	39.4	-	-	20.2	312	-	280	317	362	410-421
		61.1	22.9	8240	0.9				25.4	37.1	-	-	19.0						
		50.7	27.6	6837	1.2				24.1	35.2	-	-	18.0						
		46.4	30.2	6257	1.3				24.1	35.2	-	-	18.0						
	PLB 10003*	140.0	20.0	9440	0.8	15.0	10.5	180M/2A	27.0	39.4	-	-	20.2	289	-	257	294	339	410-421
		120.6	23.2	8132	0.9				25.4	37.1	-	-	19.0						
		96.2	29.1	6487	1.1				24.1	35.2	-	-	18.0						
		88.8	31.5	5988	1.1				24.1	35.2	-	-	18.0						
		73.1	38.3	4929	1.6				21.8	31.8	-	-	16.3						
		61.1	45.8	4120	1.5				21.1	30.9	-	-	15.8						
		50.7	55.2	3419	2.1				20.2	29.5	-	-	15.1						
		46.4	60.3	3129	2.2				19.2	28.0	-	-	14.4						

* Soğutucu gereklidir / Cooling is required / Kühlung ist erforderlich / È richiesto raffreddamento / Le refroidissement est nécessaire / Se requiere un enfriamiento

P1 (kW)		iges	n2 (rpm)	M2 (Nm)	fs	Pt (20°C) (kW)	Pt (40°C) (kW)	Motor IE2	FR (kN)					~ Kg					mm
									MC	MS	PC	PS	CPC	M...	P...	F	FS	CPC	
22.00	PLB 7003*	77.9	35.9	5253	0.8	14.0	9.8	180M/2A	-	-	40.3	48.3	30.2	-	229	211	232	246	392-403
		67.1	41.7	4525	0.9				-	-	38.5	46.2	28.9						
		60.5	46.3	4079	0.8				-	-	37.4	44.9	28.0						
		55.6	50.4	3749	1.0				-	-	36.8	44.2	27.6						
		53.6	52.2	3614	1.0				-	-	36.8	44.2	27.6						
	PLB 5003*	47.5	58.9	3203	0.9	10.0	7.0	180M/2A	10.3	13.3	18.6	21.5	13.9	194	203	185	196	207	370-385
		39.4	71.1	2657	1.1				10.0	12.8	18.0	20.8	13.5						
	PLB 25002	29.2	30.8	6348	1.9	30.0	21.0	200L/6C	33.3	50.7	-	-	25.0	484	-	447	455	547	476-489
		24.3	37.0	5283	2.8				31.5	48.0	-	-	23.6						
		19.2	46.9	4174	2.7				29.3	44.5	-	-	21.9						
	PLB 25002	29.2	47.9	4081	2.7	30.0	21.0	180L/4B	28.8	43.8	-	-	21.6	438	-	401	409	501	476-489
	PLB 18002	20.0	45.0	4348	2.2	25.0	17.5	200L/6C	19.5	34.5	45.5	60.5	14.6	402	429	371	407	452	452-469
		16.6	54.2	3609	2.9				18.6	32.9	43.4	57.7	14.0						
	PLB 16002	36.7	24.5	7978	0.8	23.0	16.1	200L/6C	23.4	41.3	54.6	72.5	17.6	347	374	316	352	397	428-445
		30.5	29.5	6630	1.2				22.2	39.2	51.8	68.8	16.7						
		23.3	38.6	5065	1.1				20.1	35.5	46.9	62.3	15.1						
		19.3	46.6	4196	1.7				19.5	34.5	45.5	60.5	14.6						
		14.8	60.8	3217	2.8				17.7	31.3	41.3	54.9	13.3						
	PLB 16002	36.7	38.1	5129	1.1	23.0	16.1	180L/4B	20.1	35.5	46.9	62.3	15.1	301	328	270	306	351	428-445
		30.5	45.9	4262	1.7				19.5	34.5	45.5	60.5	14.6						
		23.3	60.1	3256	1.6				17.7	31.3	41.3	54.9	13.3						
		19.3	72.5	2697	2.5				16.8	29.7	39.2	52.1	12.6						
	PLB 16002	36.7	76.3	2564	2.0	23.0	16.1	180M/2A	16.8	29.7	39.2	52.1	12.6	278	305	247	283	328	428-445
		30.5	91.8	2131	3.0				15.6	27.6	36.4	48.4	11.7						
		23.3	120.2	1628	2.9				14.6	25.7	34.0	45.1	10.9						
	PLB 10002	30.5	29.5	6630	0.8	23.0	16.1	200L/6C	24.1	35.2	-	-	18.0	339	-	307	344	389	410-421
		23.3	38.6	5065	0.8				21.8	31.8	-	-	16.3						
		19.3	46.6	4196	1.2				21.1	30.9	-	-	15.8						
		14.8	60.8	3217	1.9				19.2	28.0	-	-	14.4						
		12.3	73.2	2674	2.5				18.2	26.6	-	-	13.7						
	PLB 10002	36.7	38.1	5129	0.8	23.0	16.1	180L/4B	21.8	31.8	-	-	16.3	293	-	261	298	343	410-421
		30.5	45.9	4262	1.2				21.1	30.9	-	-	15.8						
		23.3	60.1	3256	1.1				19.2	28.0	-	-	14.4						
		19.3	72.5	2697	1.7				18.2	26.6	-	-	13.7						
		14.8	94.6	2068	2.7				16.7	24.5	-	-	12.6						
	PLB 10002	36.7	76.3	2564	1.3	23.0	16.1	180M/2A	18.2	26.6	-	-	13.7	270	-	238	275	320	410-421
		30.5	91.8	2131	2.1				16.9	24.7	-	-	12.7						
		23.3	120.2	1628	2.0				15.8	23.0	-	-	11.8						
		19.3	145.1	1349	3.0				15.0	21.9	-	-	11.2						
	PLB 7002*	24.1	37.3	5239	0.8	18.0	12.6	200L/6C	-	-	40.3	48.3	30.2	-	309	290	312	325	392-403
		17.3	52.0	3761	0.9				-	-	36.8	44.2	27.6						
		15.3	58.8	3326	1.1				-	-	33.9	40.7	25.4						
		12.7	70.9	2761	1.4				-	-	32.8	39.3	24.6						
	PLB 7002*	27.2	51.5	3801	0.9	18.0	12.6	180L/4B	-	-	36.8	44.2	27.6	-	263	244	266	279	392-403
		24.1	58.1	3368	1.1				-	-	33.9	40.7	25.4						
		20.0	70.0	2795	1.0				-	-	32.8	39.3	24.6						
		17.3	80.9	2418	1.3				-	-	31.1	37.3	23.3						
		15.3	91.5	2138	1.6				-	-	29.9	35.9	22.4						
		12.7	110.2	1775	2.1				-	-	27.9	33.5	20.9						
	PLB 7002*	38.1	73.5	2662	0.8	18.0	12.6	180M/2A	-	-	32.2	38.6	24.2	-	240	221	243	256	392-403
		31.6	88.6	2208	1.2				-	-	29.9	35.9	22.4						
		27.2	102.9	1901	1.6				-	-	29.3	35.2	22.0						
		24.1	116.2	1684	2.0				-	-	27.9	33.5	20.9						
		20.0	140.0	1398	1.7				-	-	26.5	31.7	19.8						
		17.3	161.8	1209	2.3				-	-	25.6	30.7	19.2						
		15.3	183.0	1069	2.8				-	-	24.4	29.3	18.3						
	PLB 5002*	14.2	63.4	3087	0.9	15.0	10.5	200L/6C	10.2	13.1	18.3	21.2	13.7	255	264	247	257	268	370-385
		13.1	68.7	2848	1.0				10.0	12.8	18.0	20.8	13.5						
	PLB 5002*	32.7	85.6	2285	0.8	15.0	10.5	180M/2A	9.3	11.9	16.7	19.3	12.5	186	195	178	188	199	370-385
		28.1	99.6	1963	1.0				8.9	11.5	16.1	18.6	12.0						
		22.5	124.4	1572	1.5				8.5	10.9	15.3	17.7	11.5						
		20.6	135.9	1439	1.8				8.1	10.4	14.5	16.8	10.9						
		17.8	157.3	1244	1.5				7.8	10.0	14.0	16.2	10.5						
		14.2	197.2	992	2.2				7.3	9.3	13.1	15.1	9.8						
		13.1	213.7	915	2.6				7.1	9.1	12.8	14.8	9.6						
	PLB 5002	22.5	62.2	3144	0.9	15.0	10.5	180L/4B	10.3	13.3	18.6	21.5	13.9	209	218	201	211	222	370-385
		20.6	68.0	2879	1.0				10.0	12.8	18.0	20.8	13.5						
		17.8	78.7	2488	0.8				9.5	12.2	17.0	19.7	12.8						
		14.2	98.6	1984	1.2				8.9	11.5	16.1	18.6	12.0						
		13.1	106.9	1831	1.5				8.9	11.5	16.1	18.6	12.0						

* Soğutucu gereklidir / Cooling is required / Kühlung ist erforderlich / È richiesto raffreddamento / Le refroidissement est nécessaire / Se requiere un enfriamiento

PGR DRIVE TECHNOLOGIES

P1 (kW)		iges	n2 (rpm)	M2 (Nm)	fs	Pt (20°C) (kW)	Pt (40°C) (kW)	Motor IE2	FR (kN)					~ Kg					mm
									MC	MS	PC	PS	CPC	M...	P...	F	FS	CPC	
22.00	PLB 2502	12.1	115.7	1691	1.0	12.0	8.4	180L/4B	8.5	10.9	15.3	17.7	11.5	205	214	193	207	218	348-363
	PLB 2502*	17.6 15.2 12.1	159.1 184.2 231.4	1230 1062 845	0.9 1.2 1.7	12.0	8.4	180M/2A	7.8 7.4 6.9	10.0 9.6 8.9	14.0 13.4 12.4	16.2 15.5 14.4	10.5 10.0 9.3	182	191	170	184	195	348-363
	PLB 1602*	12.6 10.4	222.2 269.2	880 727	0.9 1.0	8.0	5.6	180M/2A	2.2 2.1	2.7 2.6	4.9 4.6	6.1 5.8	3.6 3.5	165	167	163	166	170	326-340
30.00	PLB 90004*	419.7 390.0 322.9 266.3 247.4	2.1 2.3 2.8 3.4 3.6	115859 107660 89137 73513 68295	0.9 0.9 1.1 1.3 1.3	30.0	21.0	225M/6B	263.5 263.5 240.3 240.3 224.8	367.2 367.2 334.8 334.8 313.2	- - - - -	- - - - -	197.6 197.6 180.2 180.2 168.6	999	-	903	925	1173	576-585
	PLB 90004	663.9 572.4 506.9 459.6 419.7 390.0 322.9 266.3 247.4	2.1 2.4 2.8 3.0 3.3 3.6 4.3 5.3 5.7	117817 101579 89956 81562 74481 69210 57303 47258 43904	0.9 1.0 1.1 0.9 1.3 1.3 1.6 1.8 1.9	30.0	21.0	200L/4D	263.5 263.5 240.3 240.3 240.3 224.8 224.8 209.3 186.0	367.2 367.2 334.8 334.8 334.8 313.2 313.2 291.6 259.2	- - - - - - - - -	- - - - - - - - -	197.6 197.6 180.2 180.2 180.2 168.6 168.6 156.9 139.5	943	-	847	869	1117	576-585
	PLB 90004	1010.0 840.3 771.2 724.4 663.9 638.5 572.4 506.9 459.6 419.7 390.0 322.9	2.8 3.3 3.6 3.9 4.2 4.4 4.9 5.5 6.1 6.7 7.2 8.7	89618 74561 68429 64277 58909 56655 50790 44978 40781 37240 34605 28651	0.9 1.0 1.1 1.1 1.5 1.3 1.7 1.9 1.7 2.2 2.4 2.8	30.0	21.0	200L/2B	240.3 240.3 224.8 224.8 224.8 224.8 209.3 186.0 186.0 178.3 178.3 162.8	334.8 334.8 313.2 313.2 313.2 313.2 291.6 259.2 259.2 248.4 248.4 226.8	- - - - - - - - - - - -	- - - - - - - - - - - -	180.2 180.2 168.6 168.6 168.6 168.6 156.9 139.5 139.5 133.7 133.7 122.1	928	-	832	854	1102	576-585
	PLB 65004*	305.2 265.0 252.7 234.7 194.4	2.9 3.4 3.6 3.8 4.6	84251 73154 69758 64789 53665	0.8 0.9 0.9 1.0 1.2	25.0	17.5	225M/6B	120.9 120.9 113.1 113.1 105.3	167.4 167.4 156.6 156.6 145.8	- - - - -	- - - - -	90.7 90.7 84.8 84.8 79.0	793	-	731	745	897	556-569
	PLB 65004*	484.5 417.7 399.7 344.5 305.2 265.0 252.7 234.7 194.4	2.9 3.4 3.5 4.1 4.6 5.3 5.5 6.0 7.2	85980 74126 70932 61136 54161 47027 44845 41650 34499	0.8 0.9 0.9 1.0 1.1 1.3 1.3 1.4 1.7	25.0	17.5	200L/4D	120.9 120.9 120.9 113.1 105.3 105.3 93.6 93.6 89.7	167.4 167.4 167.4 156.6 145.8 145.8 129.6 129.6 124.2	- - - - - - - - -	- - - - - - - - -	90.7 90.7 90.7 84.8 79.0 79.0 70.2 70.2 67.3	737	-	675	689	841	556-569
	PLB 65004*	913.7 757.1 629.9 578.0 484.5 417.7 399.7 344.5 305.2 265.0 252.7 234.7 194.4	3.1 3.7 4.4 4.8 5.8 6.7 7.0 8.1 9.2 10.6 11.1 11.9 14.4	81074 67178 55892 51287 42990 37063 35466 30568 27081 23514 22422 20825 17249	0.8 1.0 1.1 1.2 1.4 1.6 1.6 1.8 2.0 2.3 2.4 2.5 3.0	25.0	17.5	200L/2B	120.9 113.1 113.1 105.3 93.6 89.7 89.7 85.8 81.9 78.0 78.0 78.0 73.3	167.4 156.6 156.6 145.8 129.6 124.2 124.2 118.8 113.4 108.0 108.0 108.0 101.5	- - - - - - - - - - - - -	- - - - - - - - - - - - -	90.7 84.8 84.8 79.0 70.2 67.3 67.3 64.4 61.4 58.5 58.5 58.5 55.0	722	-	660	674	826	556-569
	PLB 50004*	395.2 351.3 315.8 289.0 241.5	3.5 4.0 4.4 4.8 5.8	70133 62342 56043 51287 42857	0.8 0.9 1.0 1.1 1.2	20.0	14.0	200L/4D	129.1 129.1 129.1 120.2 106.8	178.4 178.4 178.4 166.1 147.6	- - - - -	- - - - -	96.8 96.8 96.8 90.1 80.1	648	-	590	603	756	536-549
	PLB 50004*	241.5	3.7	66667	0.8	20.0	14.0	225M/6B	129.1	178.4	-	-	96.8	704	-	646	659	812	536-549

* Soğutucu gereklidir / Cooling is required / Kühlung ist erforderlich / È richiesto raffreddamento / Le refroidissement est nécessaire / Se requiere un enfriamiento

P1 (kW)		iges	n2 (rpm)	M2 (Nm)	fs	Pt (20°C) (kW)	Pt (40°C) (kW)	Motor IE2	FR (kN)					~ Kg					mm
									MC	MS	PC	PS	CPC	M...	P...	F	FS	CPC	
30.00	PLB 50004*	587.6	4.8	52138	0.8	20.0	14.0	200L/2B	120.2	166.1	-	-	90.1	633	-	575	588	741	536-549
		543.4	5.2	48216	0.8				120.2	166.1	-	-	90.1						
		506.3	5.5	44925	0.9				106.8	147.6	-	-	80.1						
		455.5	6.1	40417	0.9				106.8	147.6	-	-	80.1						
		395.2	7.1	35067	1.5				102.4	141.5	-	-	76.8						
		351.3	8.0	31171	1.6				97.9	135.3	-	-	73.4						
		315.8	8.9	28021	1.7				93.5	129.2	-	-	70.1						
		289.0	9.7	25643	1.9				89.0	123.0	-	-	66.8						
		241.5	11.6	21429	2.2				89.0	123.0	-	-	66.8						
	PLB 35004*	223.7	6.3	39698	0.8	17.0	11.9	200L/4D	86.4	122.4	-	-	64.8	516	-	480	488	579	516-529
		202.7	6.9	35972	0.9				82.8	117.3	-	-	62.1						
		185.6	7.5	32937	0.9				79.2	112.2	-	-	59.4						
	PLB 35004*	385.0	7.3	34161	0.9	17.0	11.9	200L/2B	82.8	117.3	-	-	62.1	501	-	465	473	564	516-529
		352.6	7.9	31287	1.0				79.2	112.2	-	-	59.4						
		319.4	8.8	28341	1.1				75.6	107.1	-	-	56.7						
		292.5	9.6	25954	1.1				72.0	102.0	-	-	54.0						
		244.3	11.5	21677	1.3				72.0	102.0	-	-	54.0						
		223.7	12.5	19849	1.4				67.7	95.9	-	-	50.8						
		202.7	13.8	17986	1.6				67.7	95.9	-	-	50.8						
		185.6	15.1	16468	1.7				67.7	95.9	-	-	50.8						
	PLB 30004*	352.6	7.9	31287	0.8	17.0	11.9	200L/2B	49.5	75.4	-	-	37.1	495	-	454	462	558	496-509
		306.0	9.2	27152	0.9				47.3	71.9	-	-	35.4						
	PLB 25004*	364.3	7.7	32325	0.8	15.0	10.5	200L/2B	49.5	75.4	-	-	37.1	464	-	428	436	527	476-489
		304.0	9.2	26974	0.9				47.3	71.9	-	-	35.4						
		285.0	9.8	25288	1.0				45.0	68.5	-	-	33.8						
		252.4	11.1	22396	1.1				45.0	68.5	-	-	33.8						
	PLB 18004*	185.8	15.1	16486	0.8	13.0	9.1	200L/2B	28.2	49.8	65.8	87.4	21.2	371	398	340	376	421	452-469
	PLB 16004*	184.4	15.2	16362	0.8	11.0	7.7	200L/2B	28.2	49.8	65.8	87.4	21.2	346	373	315	351	396	428-445
		168.9	16.6	14987	1.0				28.2	49.8	65.8	87.4	21.2						
		140.1	20.0	12431	1.1				24.9	44.0	58.1	77.2	18.7						
	PLB 90003	149.3	6.0	42709	1.6	45.0	31.5	225M/6B	186.0	259.2	-	-	139.5	978	-	882	904	1152	576-585
		124.2	7.2	35529	1.8				178.3	248.4	-	-	133.7						
		95.5	9.4	27319	2.3				162.8	226.8	-	-	122.1						
		81.7	11.0	23371	2.6				155.0	216.0	-	-	116.3						
	PLB 90003	149.3	9.4	27456	2.3	45.0	31.5	200L/4D	162.8	226.8	-	-	122.1	922	-	826	848	1096	576-585
		124.2	11.3	22840	2.7				155.0	216.0	-	-	116.3						
	PLB 65003	111.9	8.0	32011	1.8	35.0	24.5	225M/6B	85.8	118.8	-	-	64.4	818	-	756	770	922	556-569
		93.1	9.7	26633	2.1				78.0	108.0	-	-	58.5						
		71.6	12.6	20482	2.6				73.3	101.5	-	-	55.0						
		61.3	14.7	17536	2.9				73.3	101.5	-	-	55.0						
	PLB 65003	111.9	12.5	20578	2.6	35.0	24.5	200L/4D	73.3	101.5	-	-	55.0	762	-	700	714	866	556-569
		93.1	15.0	17121	3.0				73.3	101.5	-	-	55.0						
	PLB 50003*	154.3	5.8	44140	0.9	25.0	17.5	225M/6B	106.8	147.6	-	-	80.1	685	-	566	581	793	536-549
		139.9	6.4	40020	0.8				106.8	147.6	-	-	80.1						
		118.1	7.6	33784	1.1				97.9	135.3	-	-	73.4						
		97.9	9.2	28006	1.3				93.5	129.2	-	-	70.1						
		76.5	11.8	21884	2.1				89.0	123.0	-	-	66.8						
		58.5	15.4	16735	2.7				83.7	115.6	-	-	62.7						
	PLB 50003*	154.3	9.1	28376	1.2	25.0	17.5	200L/4D	93.5	129.2	-	-	70.1	629	-	510	525	737	536-549
		139.9	10.0	25727	1.1				89.0	123.0	-	-	66.8						
		118.1	11.9	21718	1.6				89.0	123.0	-	-	66.8						
		97.9	14.3	18004	1.8				83.7	115.6	-	-	62.7						
	PLB 50003*	220.5	12.7	20275	1.3	25.0	17.5	200L/2B	83.7	115.6	-	-	62.7	614	-	495	510	722	536-549
		154.3	18.1	14188	2.2				73.9	102.1	-	-	55.4						
		139.9	20.0	12864	1.9				73.9	102.1	-	-	55.4						
		118.1	23.7	10859	2.8				69.4	95.9	-	-	52.1						
	PLB 35003*	123.0	7.3	35186	0.8	23.0	16.1	225M/6B	82.8	117.3	-	-	62.1	617	-	580	588	678	516-529
		94.1	9.6	26919	0.9				72.0	102.0	-	-	54.0						
		80.0	11.3	22885	1.3				72.0	102.0	-	-	54.0						
		66.4	13.6	18995	1.5				67.7	95.9	-	-	50.8						
		52.7	17.1	15076	1.8				67.7	95.9	-	-	50.8						
		43.7	20.6	12501	2.1				59.8	84.7	-	-	44.8						
	PLB 35003*	123.0	11.4	22620	1.1	23.0	16.1	200L/4D	72.0	102.0	-	-	54.0	561	-	524	532	622	516-529
		94.1	14.9	17305	1.4				67.7	95.9	-	-	50.8						
		80.0	17.5	14712	1.8				67.7	95.9	-	-	50.8						
		66.4	21.1	12211	2.1				59.8	84.7	-	-	44.8						
		52.7	26.6	9691	2.6				56.2	79.6	-	-	42.1						
		43.7	32.0	8036	3.0				53.3	75.5	-	-	40.0						

* Soğutucu gereklidir / Cooling is required / Kühlung ist erforderlich / È richiesto raffreddamento / Le refroidissement est nécessaire / Se requiere un enfriamiento

P1 (kW)		iges	n2 (rpm)	M2 (Nm)	fs	Pt (20°C) (kW)	Pt (40°C) (kW)	Motor IE2	FR (kN)					~ Kg					mm
									MC	MS	PC	PS	CPC	M...	P...	F	FS	CPC	
30.00	PLB 35003*	123.0 94.1	22.8 29.8	11310 8652	1.9 2.4	23.0	16.1	200L/2B	56.2 53.3	79.6 75.5	- -	- -	42.1 40.0	546	-	509	517	607	516-529
	PLB 30003*	104.5 80.0 66.4 52.7	8.6 11.3 13.6 17.1	29894 22885 18995 15076	0.8 1.0 1.2 1.5	23.0	16.1	225M/6B	47.3 45.0 42.3 42.3	71.9 68.5 64.4 64.4	- - - -	- - - -	35.4 33.8 31.7 31.7	611	-	572	582	672	496-509
	PLB 30003*	104.5 80.0 66.4 52.7	13.4 17.5 21.1 26.6	19217 14712 12211 9691	1.2 1.5 1.7 2.1	23.0	16.1	200L/4D	42.3 42.3 37.4 35.1	64.4 64.4 56.9 53.4	- - - -	- - - -	31.7 31.7 28.0 26.3	555	-	516	526	616	496-509
	PLB 30003*	163.8 135.9 104.5 80.0	17.1 20.6 26.8 35.0	15061 12496 9609 7356	1.1 1.3 2.1 2.7	23.0	16.1	200L/2B	42.3 37.4 35.1 31.5	64.4 56.9 53.4 48.0	- - - -	- - - -	31.7 28.0 26.3 23.6	540	-	501	511	601	496-509
	PLB 25003*	96.4 79.6 69.1 61.2 50.7	9.3 11.3 13.0 14.7 17.8	27577 22771 19767 17507 14503	0.9 0.8 1.2 1.3 1.5	20.0	14.0	225M/6B	47.3 45.0 42.3 42.3 37.4	71.9 68.5 64.4 64.4 56.9	- - - - -	- - - - -	35.4 33.8 31.7 31.7 28.0	520	-	484	492	583	476-489
	PLB 25003*	125.4 104.2 96.4 89.8 79.6 69.1 61.2 50.7	11.2 13.4 14.5 15.6 17.6 20.3 22.9 27.6	23061 19162 17728 16514 14638 12707 11255 9324	0.8 0.9 1.3 1.1 1.2 1.7 1.9 2.2	20.0	14.0	200L/4D	45.0 42.3 42.3 42.3 37.4 37.4 35.1 33.3	68.5 64.4 64.4 64.4 56.9 56.9 53.4 50.7	- - - - - - - -	- - - - - - - -	33.8 31.7 31.7 31.7 28.0 28.0 26.3 25.0	464	-	428	436	527	476-489
	PLB 25003*	197.4 164.2 141.6 125.4 104.2 96.4 89.8 79.6 69.1	14.2 17.1 19.8 22.3 26.9 29.0 31.2 35.2 40.5	18151 15098 13020 11530 9581 8864 8257 7319 6354	0.8 1.1 1.3 1.4 1.7 2.3 1.9 2.1 3.0	20.0	14.0	200L/2B	42.3 42.3 37.4 37.4 35.1 33.3 33.3 31.5 30.2	64.4 64.4 56.9 56.9 53.4 50.7 50.7 48.0 45.9	- - - - - - - - -	- - - - - - - - -	31.7 31.7 28.0 28.0 26.3 25.0 25.0 23.6 22.6	449	-	413	421	512	476-489
	PLB 18003*	85.7 71.2 54.4	16.3 19.7 25.7	15760 13094 10004	0.8 1.0 1.2	17.0	11.9	200L/4D	28.2 24.9 23.4	49.8 44.0 41.3	65.8 58.1 54.6	87.4 77.2 72.5	21.2 18.7 17.6	384	411	353	389	434	452-469
	PLB 18003*	54.4	16.5	15562	0.8	17.0	11.9	225M/6B	28.2	49.8	65.8	87.4	21.2	440	467	409	445	490	452-469
	PLB 18003*	163.3 135.5 116.7 103.3 85.7 71.2 54.4	17.1 20.7 24.0 27.1 32.7 39.3 51.5	15015 12459 10730 9498 7880 6547 5002	0.8 1.0 1.0 1.1 1.5 1.7 2.1	17.0	11.9	200L/2B	28.2 24.9 23.4 23.4 21.0 20.1 19.2	49.8 44.0 41.3 41.3 37.1 35.5 33.9	65.8 58.1 54.6 54.6 49.0 46.9 44.8	87.4 77.2 72.5 72.5 65.1 62.3 59.5	21.2 18.7 17.6 17.6 15.8 15.1 14.4	369	396	338	374	419	452-469
	PLB 16003*	50.7 46.4	17.8 19.4	14503 13273	0.9 0.9	15.0	10.5	225M/6B	24.9 24.9	44.0 44.0	58.1 58.1	77.2 77.2	18.7 18.7	434	461	403	439	484	428-445
	PLB 16003*	76.5 61.1 50.7 46.4	18.3 22.9 27.6 30.2	14068 11236 9324 8533	0.8 0.9 1.3 1.4	15.0	10.5	200L/4D	24.9 23.4 22.2 22.2	44.0 41.3 39.2 39.2	58.1 54.6 51.8 51.8	77.2 72.5 68.8 68.8	18.7 17.6 16.7 16.7	378	405	347	383	428	428-445
	PLB 16003*	140.0 120.6 116.1 96.2 88.8 76.5 61.1 50.7 46.4	20.0 23.2 24.1 29.1 31.5 36.6 45.8 55.2 60.3	12873 11089 10675 8846 8165 7034 5618 4662 4266	0.8 1.0 0.8 1.2 1.2 1.4 1.7 2.2 2.4	15.0	10.5	200L/2B	24.9 23.4 23.4 22.2 22.2 21.0 19.5 18.6 17.7	44.0 41.3 41.3 39.2 39.2 37.1 34.5 32.9 31.3	58.1 54.6 54.6 51.8 51.8 49.0 45.5 43.4 41.3	77.2 72.5 72.5 68.8 68.8 65.1 60.5 57.7 54.9	18.7 17.6 17.6 16.7 16.7 15.8 14.6 14.0 13.3	363	390	332	368	413	428-445
	PLB 10003*	50.7 46.4	27.6 30.2	9324 8533	0.9 0.9	15.0	10.5	200L/4D	24.1 24.1	35.2 35.2	- -	- -	18.0 18.0	370	-	338	375	420	410-421
	PLB 10003*	96.2 88.8 73.1 61.1 50.7 46.4	29.1 31.5 38.3 45.8 55.2 60.3	8846 8165 6721 5618 4662 4266	0.8 0.8 1.1 1.1 1.5 1.6	15.0	10.5	200L/2B	24.1 24.1 21.8 21.1 20.2 19.2	35.2 35.2 31.8 30.9 29.5 28.0	- - - - - -	- - - - - -	18.0 18.0 16.3 15.8 15.1 14.4	355	-	323	360	405	410-421

* Soğutucu gereklidir / Cooling is required / Kühlung ist erforderlich / È richiesto raffreddamento / Le refroidissement est nécessaire / Se requiere un enfriamiento

P1 (kW)		iges	n2 (rpm)	M2 (Nm)	fs	Pt (20°C) (kW)	Pt (40°C) (kW)	Motor IE2	FR (kN)					~ Kg					mm
									MC	MS	PC	PS	CPC	M...	P...	F	FS	CPC	
30.00	PLB 7003*	53.6	52.2	4928	0.8	14.0	9.8	200L/2B	-	-	36.8	44.2	27.6	-	295	277	298	312	392-403
	PLB 5003*	39.4	71.1	3623	0.8	10.0	7.0	200L/2B	10.0	12.8	18.0	20.8	13.5	260	269	251	262	273	370-385
	PLB 50002	28.0	32.1	8300	2.8	38.0	26.6	225M/6B	65.9	91.0	-	-	49.4	639	-	581	594	743	536-549
	PLB 35002	22.0	40.9	6522	3.0	34.0	23.8	225M/6B	48.2	68.3	-	-	36.2	558	-	521	529	621	516-529
	PLB 25002	29.2 24.3 19.2 16.0	30.8 37.0 46.9 56.3	8656 7203 5692 4743	1.4 2.1 2.0 2.9	30.0	21.0	225M/6B	33.3 31.5 29.3 27.9	50.7 48.0 44.5 42.5	- - - -	- - - -	25.0 23.6 21.9 20.9	552	-	515	523	615	476-489
	PLB 25002	29.2 24.3 19.2	47.9 57.6 72.9	5565 4631 3659	2.0 3.0 2.8	30.0	21.0	200L/4D	28.8 26.6 25.2	43.8 40.4 38.4	- - -	- - -	21.6 19.9 18.9	496	-	459	467	559	476-489
	PLB 18002*	20.0 16.6 13.2 10.9	45.0 54.2 68.2 82.6	5929 4921 3913 3231	1.6 2.1 2.3 3.0	25.0	17.5	225M/6B	19.5 18.6 17.1 15.9	34.5 32.9 30.2 28.1	45.5 43.4 39.9 37.1	60.5 57.7 53.0 49.3	14.6 14.0 12.8 11.9	470	497	439	475	520	452-469
	PLB 18002*	20.0	70.0	3811	2.3	25.0	17.5	200L/4D	17.1	30.2	39.9	53.0	12.8	414	441	383	419	464	452-469
	PLB 16002*	30.5 23.3 19.3 14.8 12.3	29.5 38.6 46.6 60.8 73.2	9041 6907 5721 4387 3646	0.9 0.8 1.3 2.1 2.7	23.0	16.1	225M/6B	22.2 20.1 19.5 17.7 16.8	39.2 35.5 34.5 31.3 29.7	51.8 46.9 45.5 41.3 39.2	68.8 62.3 60.5 54.9 52.1	16.7 15.1 14.6 13.3 12.6	415	442	384	420	465	428-445
	PLB 16002*	36.7 30.5 23.3 19.3 14.8	38.1 45.9 60.1 72.5 94.6	6994 5812 4440 3678 2820	0.8 1.3 1.2 1.8 3.0	23.0	16.1	200L/4D	20.1 19.5 17.7 16.8 15.5	35.5 34.5 31.3 29.7 27.3	46.9 45.5 41.3 39.2 36.1	62.3 60.5 54.9 52.1 47.9	15.1 14.6 13.3 12.6 11.6	359	386	328	364	409	428-445
	PLB 16002*	36.7 30.5 23.3	76.3 91.8 120.2	3497 2906 2220	1.5 2.2 2.1	23.0	16.1	200L/2B	16.8 15.6 14.6	29.7 27.6 25.7	39.2 36.4 34.0	52.1 48.4 45.1	12.6 11.7 10.9	344	371	313	349	394	428-445
	PLB 10002*	30.5 23.3 19.3 14.8 12.3	45.9 60.1 72.5 94.6 113.8	5812 4440 3678 2820 2344	0.9 0.8 1.2 2.0 2.7	23.0	16.1	200L/4D	21.1 19.2 18.2 16.7 15.8	30.9 28.0 26.6 24.5 23.0	- - - - -	- - - - -	15.8 14.4 13.7 12.6 11.8	351	-	319	356	401	410-421
	PLB 10002*	19.3 14.8 12.3	46.6 60.8 73.2	5721 4387 3646	0.9 1.4 1.9	23.0	16.1	225M/6B	21.1 19.2 18.2	30.9 28.0 26.6	- - -	- - -	15.8 14.4 13.7	407	-	375	412	457	410-421
	PLB 10002*	36.7 30.5 23.3 19.3	76.3 91.8 120.2 145.1	3497 2906 2220 1839	1.0 1.5 1.4 2.2	23.0	16.1	200L/2B	18.2 16.9 15.8 15.0	26.6 24.7 23.0 21.9	- - - -	- - - -	13.7 12.7 11.8 11.2	336	-	304	341	386	410-421
	PLB 7002*	24.1 17.3 15.3 12.7	58.1 80.9 91.5 110.2	4593 3297 2916 2420	0.8 0.9 1.2 1.5	18.0	12.6	200L/4D	- - - -	- - - -	33.9 31.1 29.9 27.9	40.7 37.3 35.9 33.5	25.4 23.3 22.4 20.9	-	321	302	324	337	392-403
	PLB 7002*	15.3 12.7	58.8 70.9	4536 3765	0.8 1.0	18.0	12.6	225M/6B	- -	- -	33.9 32.8	40.7 39.3	25.4 24.6	-	377	358	380	393	392-403
	PLB 7002*	31.6 27.2 24.1 20.0 17.3 15.3 12.7	88.6 102.9 116.2 140.0 161.8 183.0 220.5	3011 2592 2296 1906 1648 1458 1210	0.9 1.1 1.4 1.2 1.7 2.1 2.7	18.0	12.6	200L/2B	- - - - - - -	- - - - - - -	29.9 29.3 27.9 26.5 25.6 24.4 23.3	35.9 35.2 33.5 31.7 30.7 29.3 27.9	22.4 22.0 20.9 19.8 19.2 18.3 17.5	-	306	287	309	322	392-403
	PLB 5002*	14.2 13.1	98.6 106.9	2706 2496	0.9 1.1	15.0	10.5	200L/4D	8.9 8.9	11.5 11.5	16.1 16.1	18.6 18.6	12.0 12.0	267	276	259	269	280	370-385
	PLB 5002*	28.1 22.5 20.6 17.8 14.2 13.1	99.6 124.4 135.9 157.3 197.2 213.7	2677 2144 1963 1696 1353 1248	0.8 1.1 1.3 1.1 1.6 1.9	15.0	10.5	200L/2B	8.9 8.5 8.1 7.8 7.3 7.1	11.5 10.9 10.4 10.0 9.3 9.1	16.1 15.3 14.5 14.0 13.1 12.8	18.6 17.7 16.8 16.2 15.1 14.8	12.0 11.5 10.9 10.5 9.8 9.6	252	261	244	254	265	370-385
	PLB 2502*	15.2 12.1	184.2 231.4	1448 1153	0.9 1.3	12.0	8.4	200L/2B	7.4 6.9	9.6 8.9	13.4 12.4	15.5 14.4	10.0 9.3	248	257	236	250	261	348-363
	PLB 1602*	10.4	269.2	991	0.8	8.0	5.6	200L/2B	2.1	2.6	4.6	5.8	3.5	231	233	229	232	236	326-340

* Soğutucu gereklidir / Cooling is required / Kühlung ist erforderlich / È richiesto raffreddamento / Le refroidissement est nécessaire / Se requiere un enfriamiento

P1 (kW)		iges	n2 (rpm)	M2 (Nm)	fs	Pt (20°C) (kW)	Pt (40°C) (kW)	Motor IE2	FR (kN) MC	MS	PC	PS	CPC	~ Kg M…	P…	F	FS	CPC	mm
37.00	PLB 90004*	572.4	2.4	125281	0.8	30.0	21.0	225M/4C	263.5	367.2	-	-	197.6	1025	-	929	951	1199	576-585
		506.9	2.8	110945	0.9				240.3	334.8	-	-	180.2						
		459.6	3.0	100593	0.8				240.3	334.8	-	-	180.2						
		419.7	3.3	91860	1.0				240.3	334.8	-	-	180.2						
		390.0	3.6	85359	1.1				224.8	313.2	-	-	168.6						
		322.9	4.3	70673	1.3				224.8	313.2	-	-	168.6						
		266.3	5.3	58285	1.5				209.3	291.6	-	-	156.9						
		247.4	5.7	54148	1.6				186.0	259.2	-	-	139.5						
	PLB 90004*	840.3	3.3	91958	0.8	30.0	21.0	200L/2C	240.3	334.8	-	-	180.2	939	-	843	865	1113	576-585
		771.2	3.6	84396	0.9				224.8	313.2	-	-	168.6						
		724.4	3.9	79275	0.9				224.8	313.2	-	-	168.6						
		663.9	4.2	72654	1.2				224.8	313.2	-	-	168.6						
		638.5	4.4	69874	1.0				224.8	313.2	-	-	168.6						
		572.4	4.9	62641	1.4				209.3	291.6	-	-	156.9						
		506.9	5.5	55473	1.5				186.0	259.2	-	-	139.5						
		459.6	6.1	50296	1.3				186.0	259.2	-	-	139.5						
		419.7	6.7	45930	1.8				178.3	248.4	-	-	133.7						
		390.0	7.2	42680	1.9				178.3	248.4	-	-	133.7						
		322.9	8.7	35337	2.2				162.8	226.8	-	-	122.1						
		266.3	10.5	29143	2.7				155.0	216.0	-	-	116.3						
		247.4	11.3	27074	2.8				155.0	216.0	-	-	116.3						
	PLB 65004*	757.1	3.7	82853	0.8	25.0	17.5	200L/2C	113.1	156.6	-	-	84.8	733	-	671	685	837	556-569
		629.9	4.4	68933	0.9				113.1	156.6	-	-	84.8						
		578.0	4.8	63253	1.0				105.3	145.8	-	-	79.0						
		484.5	5.8	53021	1.1				93.6	129.6	-	-	70.2						
		417.7	6.7	45711	1.3				89.7	124.2	-	-	67.3						
		399.7	7.0	43741	1.3				89.7	124.2	-	-	67.3						
		344.5	8.1	37700	1.5				85.8	118.8	-	-	64.4						
		305.2	9.2	33400	1.7				81.9	113.4	-	-	61.4						
		265.0	10.6	29000	1.9				78.0	108.0	-	-	58.5						
		252.7	11.1	27654	2.0				78.0	108.0	-	-	58.5						
		234.7	11.9	25684	2.1				78.0	108.0	-	-	58.5						
		194.4	14.4	21274	2.4				73.3	101.5	-	-	55.0						
	PLB 65004*	344.5	4.1	75401	0.8	25.0	17.5	225M/4C	113.1	156.6	-	-	84.8	819	-	757	771	923	556-569
		305.2	4.6	66799	0.9				105.3	145.8	-	-	79.0						
		265.0	5.3	58001	1.0				105.3	145.8	-	-	79.0						
		252.7	5.5	55308	1.1				93.6	129.6	-	-	70.2						
		234.7	6.0	51369	1.2				93.6	129.6	-	-	70.2						
		194.4	7.2	42548	1.4				89.7	124.2	-	-	67.3						
	PLB 50004*	315.8	4.4	69119	0.8	20.0	14.0	225M/4C	129.1	178.4	-	-	96.8	730	-	672	685	838	536-549
		289.0	4.8	63253	0.9				120.2	166.1	-	-	90.1						
		241.5	5.8	52857	1.0				106.8	147.6	-	-	80.1						
	PLB 50004*	455.5	6.1	49848	0.8	20.0	14.0	200L/2C	106.8	147.6	-	-	80.1	644	-	586	599	752	536-549
		395.2	7.1	43249	1.2				102.4	141.5	-	-	76.8						
		351.3	8.0	38445	1.3				97.9	135.3	-	-	73.4						
		315.8	8.9	34560	1.4				93.5	129.2	-	-	70.1						
		289.0	9.7	31627	1.5				89.0	123.0	-	-	66.8						
		241.5	11.6	26429	1.8				89.0	123.0	-	-	66.8						
	PLB 35004*	185.6	7.5	40622	0.8	17.0	11.9	225M/4C	79.2	112.2	-	-	59.4	598	-	562	570	661	516-529
	PLB 35004*	352.6	7.9	38587	0.8	17.0	11.9	200L/2C	79.2	112.2	-	-	59.4	512	-	476	484	575	516-529
		319.4	8.8	34954	0.9				75.6	107.1	-	-	56.7						
		292.5	9.6	32010	0.9				72.0	102.0	-	-	54.0						
		244.3	11.5	26735	1.1				72.0	102.0	-	-	54.0						
		223.7	12.5	24481	1.2				67.7	95.9	-	-	50.8						
		202.7	13.8	22182	1.3				67.7	95.9	-	-	50.8						
		185.6	15.1	20311	1.4				67.7	95.9	-	-	50.8						
	PLB 25004*	285.0	9.8	31189	0.8	15.0	10.5	200L/2C	45.0	68.5	-	-	33.8	475	-	439	447	538	476-489
		252.4	11.1	27621	0.9				45.0	68.5	-	-	33.8						
	PLB 16004*	168.9	16.6	18484	0.8	11.0	7.7	200L/2C	28.2	49.8	65.8	87.4	21.2	357	384	326	362	407	428-445
		140.1	20.0	15332	0.9				24.9	44.0	58.1	77.2	18.7						
	PLB 90003	149.3	9.4	33862	1.9	45.0	31.5	225M/4C	162.8	226.8	-	-	122.1	1004	-	908	930	1178	576-585
		124.2	11.3	28170	2.2				155.0	216.0	-	-	116.3						
		95.5	14.7	21660	2.7				145.7	203.0	-	-	109.3						
	PLB 65003*	111.9	12.5	25380	2.1	35.0	24.5	225M/4C	73.3	101.5	-	-	55.0	844	-	782	796	948	556-569
		93.1	15.0	21116	2.4				73.3	101.5	-	-	55.0						
		71.6	19.6	16239	3.0				64.7	89.6	-	-	48.6						
	PLB 50003*	154.3	9.1	34997	1.0	25.0	17.5	225M/4C	93.5	129.2	-	-	70.1	711	-	592	607	819	536-549
		139.9	10.0	31730	0.9				89.0	123.0	-	-	66.8						
		118.1	11.9	26786	1.3				89.0	123.0	-	-	66.8						
		97.9	14.3	22205	1.5				83.7	115.6	-	-	62.7						
		76.5	18.3	17351	2.5				73.9	102.1	-	-	55.4						

* Soğutucu gereklidir / Cooling is required / Kühlung ist erforderlich / È richiesto raffreddamento / Le refroidissement est nécessaire / Se requiere un enfriamiento

P1 (kW)		iges	n2 (rpm)	M2 (Nm)	fs	Pt (20°C) (kW)	Pt (40°C) (kW)	Motor IE2	FR (kN)					~ Kg					mm
									MC	MS	PC	PS	CPC	M...	P...	F	FS	CPC	
37.00	PLB 50003*	220.5	12.7	25006	1.1	25.0	17.5	200L/2C	83.7	115.6	-	-	62.7	625	-	506	521	733	536-549
		154.3	18.1	17498	1.8				73.9	102.1	-	-	55.4						
		139.9	20.0	15865	1.6				73.9	102.1	-	-	55.4						
		118.1	23.7	13393	2.2				69.4	95.9	-	-	52.1						
		97.9	28.6	11102	2.6				65.9	91.0	-	-	49.4						
	PLB 35003*	123.0	11.4	27897	0.9	23.0	16.1	225M/4C	72.0	102.0	-	-	54.0	643	-	606	614	704	516-529
		94.1	14.9	21343	1.1				67.7	95.9	-	-	50.8						
		80.0	17.5	18145	1.5				67.7	95.9	-	-	50.8						
		66.4	21.1	15060	1.7				59.8	84.7	-	-	44.8						
		52.7	26.6	11953	2.1				56.2	79.6	-	-	42.1						
		43.7	32.0	9912	2.5				53.3	75.5	-	-	40.0						
	PLB 35003*	123.0	22.8	13949	1.6	23.0	16.1	200L/2C	56.2	79.6	-	-	42.1	557	-	520	528	618	516-529
		94.1	29.8	10671	2.0				53.3	75.5	-	-	40.0						
		80.0	35.0	9072	2.7				50.4	71.4	-	-	37.8						
	PLB 30003*	104.5	13.4	23701	1.0	23.0	16.1	225M/4C	42.3	64.4	-	-	31.7	637	-	598	608	698	496-509
		80.0	17.5	18145	1.2				42.3	64.4	-	-	31.7						
		66.4	21.1	15060	1.4				37.4	56.9	-	-	28.0						
		52.7	26.6	11953	1.7				35.1	53.4	-	-	26.3						
	PLB 30003*	163.8	17.1	18576	0.9	23.0	16.1	200L/2C	42.3	64.4	-	-	31.7	551	-	512	522	612	496-509
		135.9	20.6	15412	1.1				37.4	56.9	-	-	28.0						
		104.5	26.8	11851	1.7				35.1	53.4	-	-	26.3						
		80.0	35.0	9072	2.2				31.5	48.0	-	-	23.6						
		66.4	42.2	7530	2.5				30.2	45.9	-	-	22.6						
		52.7	53.1	5976	3.0				27.9	42.5	-	-	20.9						
	PLB 25003*	104.2	13.4	23633	0.8	20.0	14.0	225M/4C	42.3	64.4	-	-	31.7	546	-	510	518	609	476-489
		96.4	14.5	21864	1.0				42.3	64.4	-	-	31.7						
		89.8	15.6	20367	0.9				42.3	64.4	-	-	31.7						
		79.6	17.6	18054	0.9				37.4	56.9	-	-	28.0						
		69.1	20.3	15672	1.4				37.4	56.9	-	-	28.0						
		61.2	22.9	13881	1.5				35.1	53.4	-	-	26.3						
		50.7	27.6	11499	1.8				33.3	50.7	-	-	25.0						
	PLB 25003*	164.2	17.1	18621	0.9	20.0	14.0	200L/2C	42.3	64.4	-	-	31.7	460	-	424	432	523	476-489
		141.6	19.8	16058	1.0				37.4	56.9	-	-	28.0						
		125.4	22.3	14221	1.1				37.4	56.9	-	-	28.0						
		104.2	26.9	11817	1.3				35.1	53.4	-	-	26.3						
		96.4	29.0	10932	1.9				33.3	50.7	-	-	25.0						
		89.8	31.2	10184	1.5				33.3	50.7	-	-	25.0						
		79.6	35.2	9027	1.7				31.5	48.0	-	-	23.6						
		69.1	40.5	7836	2.4				30.2	45.9	-	-	22.6						
		61.2	45.8	6940	2.7				29.3	44.5	-	-	21.9						
	PLB 18003*	71.2	19.7	16149	0.8	17.0	11.9	225M/4C	24.9	44.0	58.1	77.2	18.7	466	493	435	471	516	452-469
		54.4	25.7	12338	1.0				23.4	41.3	54.6	72.5	17.6						
	PLB 18003*	135.5	20.7	15366	0.8	17.0	11.9	200L/2C	24.9	44.0	58.1	77.2	18.7	380	407	349	385	430	452-469
		116.7	24.0	13234	0.8				23.4	41.3	54.6	72.5	17.6						
		103.3	27.1	11715	0.9				23.4	41.3	54.6	72.5	17.6						
		85.7	32.7	9719	1.2				21.0	37.1	49.0	65.1	15.8						
		71.2	39.3	8074	1.4				20.1	35.5	46.9	62.3	15.1						
		54.4	51.5	6169	1.7				19.2	33.9	44.8	59.5	14.4						
	PLB 16003*	61.1	22.9	13858	0.8	15.0	10.5	225M/4C	23.4	41.3	54.6	72.5	17.6	460	487	429	465	510	428-445
		50.7	27.6	11499	1.0				22.2	39.2	51.8	68.8	16.7						
		46.4	30.2	10524	1.1				22.2	39.2	51.8	68.8	16.7						
	PLB 16003*	120.6	23.2	13677	0.8	15.0	10.5	200L/2C	23.4	41.3	54.6	72.5	17.6	374	401	343	379	424	428-445
		96.2	29.1	10909	0.9				22.2	39.2	51.8	68.8	16.7						
		88.8	31.5	10070	1.0				22.2	39.2	51.8	68.8	16.7						
		76.5	36.6	8675	1.2				21.0	37.1	49.0	65.1	15.8						
		61.1	45.8	6929	1.4				19.5	34.5	45.5	60.5	14.6						
		50.7	55.2	5750	1.8				18.6	32.9	43.4	57.7	14.0						
		46.4	60.3	5262	2.0				17.7	31.3	41.3	54.9	13.3						
	PLB 10003*	46.4	30.2	10524	0.8	15.0	10.5	225M/4C	24.1	35.2	-	-	18.0	452	-	420	457	502	410-421
	PLB 10003*	73.1	38.3	8290	0.9	15.0	10.5	200L/2C	21.8	31.8	-	-	16.3	366	-	334	371	416	410-421
		61.1	45.8	6929	0.9				21.1	30.9	-	-	15.8						
		50.7	55.2	5750	1.2				20.2	29.5	-	-	15.1						
		46.4	60.3	5262	1.3				19.2	28.0	-	-	14.4						
	PLB 25002*	29.2	47.9	6863	1.6	30.0	21.0	225M/4C	28.8	43.8	-	-	21.6	578	-	541	549	641	476-489
		24.3	57.6	5711	2.4				26.6	40.4	-	-	19.9						
		19.2	72.9	4513	2.3				25.2	38.4	-	-	18.9						
	PLB 25002*	29.2	95.9	3432	2.9	30.0	21.0	200L/2C	23.2	35.3	-	-	17.4	492	-	455	463	555	476-489
	PLB 18002*	20.0	70.0	4701	1.9	25.0	17.5	225M/4C	17.1	30.2	39.9	53.0	12.8	496	523	465	501	546	452-469
		16.6	84.3	3902	2.5				15.9	28.1	37.1	49.3	11.9						
		13.2	106.1	3102	2.7				15.3	27.0	35.7	47.4	11.5						

* Soğutucu gereklidir / Cooling is required / Kühlung ist erforderlich / È richiesto raffreddamento / Le refroidissement est nécessaire / Se requiere un enfriamiento

P1 (kW)		iges	n2 (rpm)	M2 (Nm)	fs	Pt (20°C) (kW)	Pt (40°C) (kW)	Motor IE2	FR (kN) MC	MS	PC	PS	CPC	~ Kg M…	P…	F	FS	CPC	mm
37.00	PLB 16002*	30.5	45.9	7169	1.0	23.0	16.1	225M/4C	19.5	34.5	45.5	60.5	14.6	441	468	410	446	491	428-445
		23.3	60.1	5476	1.0				17.7	31.3	41.3	54.9	13.3						
		19.3	72.5	4536	1.5				16.8	29.7	39.2	52.1	12.6						
		14.8	94.6	3479	2.4				15.5	27.3	36.1	47.9	11.6						
	PLB 16002*	36.7	76.3	4313	1.2	23.0	16.1	200L/2C	16.8	29.7	39.2	52.1	12.6	355	382	324	360	405	428-445
		30.5	91.8	3584	1.8				15.6	27.6	36.4	48.4	11.7						
		23.3	120.2	2738	1.7				14.6	25.7	34.0	45.1	10.9						
		19.3	145.1	2268	2.6				13.8	24.4	32.2	42.8	10.4						
	PLB 10002*	19.3	72.5	4536	1.0	23.0	16.1	225M/4C	18.2	26.6	-	-	13.7	433	-	401	438	483	410-421
		14.8	94.6	3479	1.6				16.7	24.5	-	-	12.6						
		12.3	113.8	2891	2.2				15.8	23.0	-	-	11.8						
	PLB 10002*	36.7	76.3	4313	0.8	23.0	16.1	200L/2C	18.2	26.6	-	-	13.7	347	-	315	352	397	410-421
		30.5	91.8	3584	1.2				16.9	24.7	-	-	12.7						
		23.3	120.2	2738	1.2				15.8	23.0	-	-	11.8						
		19.3	145.1	2268	1.8				15.0	21.9	-	-	11.2						
		14.8	189.2	1739	2.8				13.8	20.2	-	-	10.4						
	PLB 7002*	17.3	80.9	4066	0.8	18.0	12.6	225M/4C	-	-	31.1	37.3	23.3	-	403	384	406	419	392-403
		15.3	91.5	3596	1.0				-	-	29.9	35.9	22.4						
		12.7	110.2	2985	1.2				-	-	27.9	33.5	20.9						
	PLB 7002*	27.2	102.9	3196	0.9	18.0	12.6	200L/2C	-	-	29.3	35.2	22.0	-	317	298	320	333	392-403
		24.1	116.2	2832	1.2				-	-	27.9	33.5	20.9						
		20.0	140.0	2350	1.0				-	-	26.5	31.7	19.8						
		17.3	161.8	2033	1.3				-	-	25.6	30.7	19.2						
		15.3	183.0	1798	1.7				-	-	24.4	29.3	18.3						
		12.7	220.5	1492	2.2				-	-	23.3	27.9	17.5						
	PLB 5002*	13.1	106.9	3079	0.9	15.0	10.5	225M/4C	8.9	11.5	16.1	18.6	12.0	349	358	341	351	362	370-385
	PLB 5002*	22.5	124.4	2644	0.9	15.0	10.5	200L/2C	8.5	10.9	15.3	17.7	11.5	263	272	255	265	276	370-385
		20.6	135.9	2421	1.0				8.1	10.4	14.5	16.8	10.9						
		17.8	157.3	2092	0.9				7.8	10.0	14.0	16.2	10.5						
		14.2	197.2	1669	1.3				7.3	9.3	13.1	15.1	9.8						
		13.1	213.7	1539	1.5				7.1	9.1	12.8	14.8	9.6						
	PLB 2502*	12.1	231.4	1422	1.0	12.0	8.4	200L/2C	6.9	8.9	12.4	14.4	9.3	259	268	247	261	272	348-363
45.00	PLB 90004*	419.7	3.3	111721	0.8	30.0	21.0	225M/4D	240.3	334.8	-	-	180.2	1045	-	949	971	1219	576-585
		390.0	3.6	103815	0.9				224.8	313.2	-	-	168.6						
		322.9	4.3	85954	1.0				224.8	313.2	-	-	168.6						
		266.3	5.3	70887	1.2				209.3	291.6	-	-	156.9						
		247.4	5.7	65856	1.3				186.0	259.2	-	-	139.5						
	PLB 90004*	724.4	3.9	96415	0.8	30.0	21.0	225M/2B	224.8	313.2	-	-	168.6	1000	-	904	926	1174	576-585
		663.9	4.2	88363	1.0				224.8	313.2	-	-	168.6						
		638.5	4.4	84982	0.8				224.8	313.2	-	-	168.6						
		572.4	4.9	76185	1.1				209.3	291.6	-	-	156.9						
		506.9	5.5	67467	1.3				186.0	259.2	-	-	139.5						
		459.6	6.1	61171	1.1				186.0	259.2	-	-	139.5						
		419.7	6.7	55861	1.5				178.3	248.4	-	-	133.7						
		390.0	7.2	51908	1.6				178.3	248.4	-	-	133.7						
		322.9	8.7	42977	1.8				162.8	226.8	-	-	122.1						
		266.3	10.5	35444	2.2				155.0	216.0	-	-	116.3						
		247.4	11.3	32928	2.3				155.0	216.0	-	-	116.3						
	PLB 65004*	305.2	4.6	81242	0.8	25.0	17.5	225M/4D	105.3	145.8	-	-	79.0	839	-	777	791	943	556-569
		265.0	5.3	70541	0.9				105.3	145.8	-	-	79.0						
		252.7	5.5	67267	0.9				93.6	129.6	-	-	70.2						
		234.7	6.0	62476	1.0				93.6	129.6	-	-	70.2						
		194.4	7.2	51748	1.1				89.7	124.2	-	-	67.3						
	PLB 65004*	578.0	4.8	76930	0.8	25.0	17.5	225M/2B	105.3	145.8	-	-	79.0	794	-	732	746	898	556-569
		484.5	5.8	64485	0.9				93.6	129.6	-	-	70.2						
		417.7	6.7	55594	1.0				89.7	124.2	-	-	67.3						
		399.7	7.0	53199	1.1				89.7	124.2	-	-	67.3						
		344.5	8.1	45852	1.2				85.8	118.8	-	-	64.4						
		305.2	9.2	40621	1.4				81.9	113.4	-	-	61.4						
		265.0	10.6	35271	1.5				78.0	108.0	-	-	58.5						
		252.7	11.1	33634	1.6				78.0	108.0	-	-	58.5						
		234.7	11.9	31238	1.7				78.0	108.0	-	-	58.5						
		194.4	14.4	25874	2.0				73.3	101.5	-	-	55.0						
	PLB 50004*	241.5	5.8	64286	0.8	20.0	14.0	225M/4D	106.8	147.6	-	-	80.1	750	-	692	705	858	536-549
	PLB 50004*	395.2	7.1	52600	1.0	20.0	14.0	225M/2B	102.4	141.5	-	-	76.8	705	-	647	660	813	536-549
		351.3	8.0	46757	1.1				97.9	135.3	-	-	73.4						
		315.8	8.9	42032	1.2				93.5	129.2	-	-	70.1						
		289.0	9.7	38465	1.3				89.0	123.0	-	-	66.8						
		241.5	11.6	32143	1.5				89.0	123.0	-	-	66.8						

* Soğutucu gereklidir / Cooling is required / Kühlung ist erforderlich / È richiesto raffreddamento / Le refroidissement est nécessaire / Se requiere un enfriamiento

P1 (kW)		iges	n2 (rpm)	M2 (Nm)	fs	Pt (20°C) (kW)	Pt (40°C) (kW)	Motor IE2	FR (kN)					~ Kg					mm
									MC	MS	PC	PS	CPC	M...	P...	F	FS	CPC	
45.00	PLB 35004*	292.5	9.6	38931	0.8	17.0	11.9	225M/2B	72.0	102.0	-	-	54.0	573	-	537	545	636	516-529
		244.3	11.5	32516	0.9				72.0	102.0	-	-	54.0						
		223.7	12.5	29774	1.0				67.7	95.9	-	-	50.8						
		202.7	13.8	26979	1.0				67.7	95.9	-	-	50.8						
		185.6	15.1	24703	1.1				67.7	95.9	-	-	50.8						
	PLB 16004*	140.1	20.0	18647	0.8	11.0	7.7	225M/2B	24.9	44.0	58.1	77.2	18.7	418	445	387	423	468	429-445
	PLB 90003	149.3	9.4	41184	1.5	45.0	31.5	225M/4D	162.8	226.8	-	-	122.1	1024	-	928	950	1198	576-585
		124.2	11.3	34260	1.8				155.0	216.0	-	-	116.3						
		95.5	14.7	26343	2.2				145.7	203.0	-	-	109.3						
		81.7	17.1	22537	2.5				145.7	203.0	-	-	109.3						
	PLB 90003	149.3	18.8	20592	2.7	45.0	31.5	225M/2B	128.7	179.3	-	-	96.5	979	-	883	905	1153	576-585
	PLB 65003*	111.9	12.5	30867	1.7	35.0	24.5	225M/4D	73.3	101.5	-	-	55.0	864	-	802	816	968	556-569
		93.1	15.0	25681	2.0				73.3	101.5	-	-	55.0						
		71.6	19.6	19751	2.5				64.7	89.6	-	-	48.6						
		61.3	22.8	16909	2.8				60.8	84.2	-	-	45.6						
	PLB 65003*	111.9	25.0	15434	3.0	35.0	24.5	225M/2B	60.8	84.2	-	-	45.6	819	-	757	771	923	556-569
	PLB 50003*	154.3	9.1	42563	0.8	25.0	17.5	225M/4D	93.5	129.2	-	-	70.1	731	-	612	627	839	536-549
		118.1	11.9	32578	1.0				89.0	123.0	-	-	66.8						
		97.9	14.3	27006	1.2				83.7	115.6	-	-	62.7						
		76.5	18.3	21102	2.0				73.9	102.1	-	-	55.4						
		58.5	23.9	16137	2.5				69.4	95.9	-	-	52.1						
	PLB 50003*	220.5	12.7	30412	0.9	25.0	17.5	225M/2B	83.7	115.6	-	-	62.7	686	-	567	582	794	536-549
		154.3	18.1	21282	1.5				73.9	102.1	-	-	55.4						
		139.9	20.0	19296	1.3				73.9	102.1	-	-	55.4						
		118.1	23.7	16289	1.8				69.4	95.9	-	-	52.1						
		97.9	28.6	13503	2.2				65.9	91.0	-	-	49.4						
	PLB 35003*	94.1	14.9	25957	0.9	23.0	16.1	225M/4D	67.7	95.9	-	-	50.8	663	-	626	634	724	516-529
		80.0	17.5	22068	1.2				67.7	95.9	-	-	50.8						
		66.4	21.1	18316	1.4				59.8	84.7	-	-	44.8						
		52.7	26.6	14537	1.7				56.2	79.6	-	-	42.1						
		43.7	32.0	12055	2.0				53.3	75.5	-	-	40.0						
	PLB 35003*	123.0	22.8	16965	1.3	23.0	16.1	225M/2B	56.2	79.6	-	-	42.1	618	-	581	589	679	516-529
		94.1	29.8	12979	1.6				53.3	75.5	-	-	40.0						
		80.0	35.0	11034	2.2				50.4	71.4	-	-	37.8						
		66.4	42.2	9158	2.5				48.2	68.3	-	-	36.2						
		52.7	53.1	7269	3.0				44.6	63.2	-	-	33.5						
	PLB 30003*	104.5	13.4	28826	0.8	23.0	16.1	225M/4D	42.3	64.4	-	-	31.7	657	-	618	628	718	496-509
		80.0	17.5	22068	1.0				42.3	64.4	-	-	31.7						
		66.4	21.1	18316	1.2				37.4	56.9	-	-	28.0						
		52.7	26.6	14537	1.4				35.1	53.4	-	-	26.3						
	PLB 30003*	163.8	17.1	22592	0.8	23.0	16.1	225M/2B	42.3	64.4	-	-	31.7	612	-	573	583	673	496-509
		135.9	20.6	18744	0.9				37.4	56.9	-	-	28.0						
		104.5	26.8	14413	1.4				35.1	53.4	-	-	26.3						
		80.0	35.0	11034	1.8				31.5	48.0	-	-	23.6						
		66.4	42.2	9158	2.1				30.2	45.9	-	-	22.6						
		52.7	53.1	7269	2.5				27.9	42.5	-	-	20.9						
	PLB 25003*	96.4	14.5	26592	0.9	20.0	14.0	225M/4D	42.3	64.4	-	-	31.7	566	-	530	538	629	476-489
		79.6	17.6	21957	0.8				37.4	56.9	-	-	28.0						
		69.1	20.3	19061	1.1				37.4	56.9	-	-	28.0						
		61.2	22.9	16882	1.2				35.1	53.4	-	-	26.3						
		50.7	27.6	13985	1.5				33.3	50.7	-	-	25.0						
	PLB 25003*	164.2	17.1	22647	0.8	20.0	14.0	225M/2B	42.3	64.4	-	-	31.7	521	-	485	493	584	476-489
		141.6	19.8	19530	0.8				37.4	56.9	-	-	28.0						
		125.4	22.3	17296	0.9				37.4	56.9	-	-	28.0						
		104.2	26.9	14372	1.1				35.1	53.4	-	-	26.3						
		96.4	29.0	13296	1.5				33.3	50.7	-	-	25.0						
		89.8	31.2	12386	1.2				33.3	50.7	-	-	25.0						
		79.6	35.2	10979	1.4				31.5	48.0	-	-	23.6						
		69.1	40.5	9531	2.0				30.2	45.9	-	-	22.6						
		61.2	45.8	8441	2.2				29.3	44.5	-	-	21.9						
		50.7	55.2	6993	2.6				27.9	42.5	-	-	20.9						
	PLB 18003*	54.4	25.7	15006	0.8	17.0	11.9	225M/4D	23.4	41.3	54.6	72.5	17.6	486	513	455	491	536	452-469
	PLB 18003*	85.7	32.7	11820	1.0	17.0	11.9	225M/2B	21.0	37.1	49.0	65.1	15.8	441	468	410	446	491	452-469
		71.2	39.3	9820	1.2				20.1	35.5	46.9	62.3	15.1						
		54.4	51.5	7503	1.4				19.2	33.9	44.8	59.5	14.4						
	PLB 16003*	50.7	27.6	13985	0.9	15.0	10.5	225M/4D	22.2	39.2	51.8	68.8	16.7	480	507	449	485	530	428-445
		46.4	30.2	12799	0.9				22.2	39.2	51.8	68.8	16.7						

* Soğutucu gereklidir / Cooling is required / Kühlung ist erforderlich / È richiesto raffreddamento / Le refroidissement est nécessaire / Se requiere un enfriamiento

P1 (kW)		iges	n2 (rpm)	M2 (Nm)	fs	Pt (20°C) (kW)	Pt (40°C) (kW)	Motor IE2	FR (kN)					~ Kg					mm
									MC	MS	PC	PS	CPC	M...	P...	F	FS	CPC	
45.00	PLB 16003*	96.2 88.8 76.5 61.1 50.7 46.4	29.1 31.5 36.6 45.8 55.2 60.3	13268 12248 10551 8427 6993 6400	0.8 0.8 0.9 1.1 1.5 1.6	15.0	10.5	225M/2B	22.2 22.2 21.0 19.5 18.6 17.7	39.2 39.2 37.1 34.5 32.9 31.3	51.8 51.8 49.0 45.5 43.4 41.3	68.8 68.8 65.1 60.5 57.7 54.9	16.7 16.7 15.8 14.6 14.0 13.3	435	462	404	440	485	428-445
	PLB 10003*	73.1 61.1 50.7 46.4	38.3 45.8 55.2 60.3	10082 8427 6993 6400	0.8 0.8 1.0 1.1	15.0	10.5	225M/2B	21.8 21.1 20.2 19.2	31.8 30.9 29.5 28.0	- - - -	- - - -	16.3 15.8 15.1 14.4	427	-	395	432	477	410-421
	PLB 50002*	28.0	50.0	8004	2.6	38.0	26.6	225M/4D	57.0	78.7	-	-	42.7	685	-	627	640	789	536-549
	PLB 35002*	22.0	63.6	6289	2.9	34.0	23.8	225M/4D	41.8	59.2	-	-	31.3	604	-	567	575	667	516-529
	PLB 25002*	29.2 24.3 19.2 16.0	47.9 57.6 72.9 87.5	8347 6946 5488 4574	1.3 2.0 1.9 2.8	30.0	21.0	225M/4D	28.8 26.6 25.2 23.9	43.8 40.4 38.4 36.3	- - - -	- - - -	21.6 19.9 18.9 17.9	598	-	561	569	661	476-489
	PLB 25002*	29.2	95.9	4173	2.4	30.0	21.0	225M/2B	23.2	35.3	-	-	17.4	553	-	516	524	616	476-489
	PLB 18002*	20.0 16.6 13.2 10.9	70.0 84.3 106.1 128.4	5717 4745 3773 3116	1.5 2.1 2.2 2.9	25.0	17.5	225M/4D	17.1 15.9 15.3 14.6	30.2 28.1 27.0 25.7	39.9 37.1 35.7 34.0	53.0 49.3 47.4 45.1	12.8 11.9 11.5 10.9	516	543	485	521	566	452-469
	PLB 18002*	20.0	140.0	2859	2.7	25.0	17.5	225M/2B	13.8	24.4	32.2	42.8	10.4	471	498	440	476	521	452-469
	PLB 16002*	30.5 23.3 19.3 14.8 12.3	45.9 60.1 72.5 94.6 113.8	8719 6660 5517 4231 3516	0.8 0.8 1.2 2.0 2.6	23.0	16.1	225M/4D	19.5 17.7 16.8 15.5 14.6	34.5 31.3 29.7 27.3 25.7	45.5 41.3 39.2 36.1 34.0	60.5 54.9 52.1 47.9 45.1	14.6 13.3 12.6 11.6 10.9	461	488	430	466	511	428-445
	PLB 16002*	36.7 30.5 23.3 19.3	76.3 91.8 120.2 145.1	5245 4359 3330 2758	1.0 1.5 1.4 2.1	23.0	16.1	225M/2B	16.8 15.6 14.6 13.8	29.7 27.6 25.7 24.4	39.2 36.4 34.0 32.2	52.1 48.4 45.1 42.8	12.6 11.7 10.9 10.4	416	443	385	421	466	428-445
	PLB 10002*	19.3 14.8 12.3	72.5 94.6 113.8	5517 4231 3516	0.8 1.3 1.8	23.0	16.1	225M/4D	18.2 16.7 15.8	26.6 24.5 23.0	- - -	- - -	13.7 12.6 11.8	453	-	421	458	503	410-421
	PLB 10002*	30.5 23.3 19.3 14.8	91.8 120.2 145.1 189.2	4359 3330 2758 2115	1.0 1.0 1.4 2.3	23.0	16.1	225M/2B	16.9 15.8 15.0 13.8	24.7 23.0 21.9 20.2	- - - -	- - - -	12.7 11.8 11.2 10.4	408	-	376	413	458	410-421
	PLB 7002*	15.3 12.7	91.5 110.2	4374 3630	0.8 1.0	18.0	12.6	225M/4D	- -	- -	29.9 27.9	35.9 33.5	22.4 20.9	-	423	404	426	439	392-403
	PLB 7002*	27.2 24.1 20.0 17.3 15.3 12.7	102.9 116.2 140.0 161.8 183.0 220.5	3888 3445 2859 2473 2187 1815	0.8 1.0 0.8 1.1 1.4 1.8	18.0	12.6	225M/2B	- - - - - -	- - - - - -	29.3 27.9 26.5 25.6 24.4 23.3	35.2 33.5 31.7 30.7 29.3 27.9	22.0 20.9 19.8 19.2 18.3 17.5	-	378	359	381	394	392-403
	PLB 5002*	20.6 14.2 13.1	135.9 197.2 213.7	2944 2030 1872	0.9 1.1 1.3	15.0	10.5	225M/2B	8.1 7.3 7.1	10.4 9.3 9.1	14.5 13.1 12.8	16.8 15.1 14.8	10.9 9.8 9.6	324	333	316	326	337	370-385
	PLB 2502*	12.1	231.4	1729	0.8	12.0	8.4	225M/2B	6.9	8.9	12.4	14.4	9.3	320	329	308	322	333	348-363
55.00	PLB 90004*	663.9 572.4 506.9 459.6 419.7 390.0 322.9 266.3 247.4	4.2 4.9 5.5 6.1 6.7 7.2 8.7 10.5 11.3	107999 93114 82459 74765 68274 63443 52527 43320 40245	0.8 0.9 1.0 0.9 1.2 1.3 1.5 1.8 1.9	30.0	21.0	250M/2B	224.8 209.3 186.0 186.0 178.3 178.3 162.8 155.0 155.0	313.2 291.6 259.2 259.2 248.4 248.4 226.8 216.0 216.0	- - - - - - - - -	- - - - - - - - -	168.6 156.9 139.5 139.5 133.7 133.7 122.1 116.3 116.3	1294	-	1198	1220	1468	576-585
	PLB 90004*	322.9 266.3 247.4	4.3 5.3 5.7	105055 86640 80491	0.9 1.0 1.1	30.0	21.0	250M/4D	224.8 209.3 186.0	313.2 291.6 259.2	- - -	- - -	168.6 156.9 139.5	1312	-	1216	1238	1486	576-585

* Soğutucu gereklidir / Cooling is required / Kühlung ist erforderlich / È richiesto raffreddamento / Le refroidissement est nécessaire / Se requiere un enfriamiento

P1 (kW)		iges	n2 (rpm)	M2 (Nm)	fs	Pt (20°C) (kW)	Pt (40°C) (kW)	Motor IE2	FR (kN)					~ Kg					mm
									MC	MS	PC	PS	CPC	M...	P...	F	FS	CPC	
55.00		484.5	5.8	78815	0.8				93.6	129.6	-	-	70.2						
		417.7	6.7	67949	0.9				89.7	124.2	-	-	67.3						
		399.7	7.0	65021	0.9				89.7	124.2	-	-	67.3						
		344.5	8.1	56041	1.0				85.8	118.8	-	-	64.4						
	PLB 65004*	305.2	9.2	49648	1.1	25.0	17.5	250M/2B	81.9	113.4	-	-	61.4	1088	-	1026	1040	1192	556-569
		265.0	10.6	43109	1.3				78.0	108.0	-	-	58.5						
		252.7	11.1	41108	1.3				78.0	108.0	-	-	58.5						
		234.7	11.9	38180	1.4				78.0	108.0	-	-	58.5						
		194.4	14.4	31624	1.6				73.3	101.5	-	-	55.0						
	PLB 65004*	234.7	6.0	76359	0.8	25.0	17.5	250M/4D	93.6	129.6	-	-	70.2	1106	-	1044	1058	1210	556-569
		194.4	7.2	63248	0.9				89.7	124.2	-	-	67.3						
		395.2	7.1	64289	0.8				102.4	141.5	-	-	76.8						
		351.3	8.0	57147	0.9				97.9	135.3	-	-	73.4						
	PLB 50004*	315.8	8.9	51372	0.9	20.0	14.0	250M/2B	93.5	129.2	-	-	70.1	999	-	941	954	1107	536-549
		289.0	9.7	47013	1.0				89.0	123.0	-	-	66.8						
		241.5	11.6	39286	1.2				89.0	123.0	-	-	66.8						
		223.7	12.5	36390	0.8				67.7	95.9	-	-	50.8						
	PLB 35004*	202.7	13.8	32974	0.8	17.0	11.9	250M/2B	67.7	95.9	-	-	50.8	867	-	831	839	930	516-529
		185.6	15.1	30192	0.9				67.7	95.9	-	-	50.8						
		149.3	9.4	50336	1.2				162.8	226.8	-	-	122.1						
	PLB 90003*	124.2	11.3	41874	1.5	45.0	31.5	250M/4D	155.0	216.0	-	-	116.3	1291	-	1195	1217	1465	576-585
		95.5	14.7	32198	1.8				145.7	203.0	-	-	109.3						
		81.7	17.1	27545	2.1				145.7	203.0	-	-	109.3						
	PLB 90003*	149.3	18.8	25168	2.2	45.0	31.5	250M/2B	128.7	179.3	-	-	96.5	1273	-	1177	1199	1447	576-585
		124.2	22.5	20937	2.6				120.9	168.5	-	-	90.7						
		111.9	12.5	37727	1.4				73.3	101.5	-	-	55.0						
		93.1	15.0	31388	1.6				73.3	101.5	-	-	55.0						
	PLB 65003*	71.6	19.6	24140	2.0	35.0	24.5	250M/4D	64.7	89.6	-	-	48.6	1131	-	1069	1083	1235	556-569
		61.3	22.8	20667	2.3				60.8	84.2	-	-	45.6						
		47.1	29.7	15880	2.8				57.7	79.9	-	-	43.3						
	PLB 65003*	111.9	25.0	18863	2.5	35.0	24.5	250M/2B	60.8	84.2	-	-	45.6	1113	-	1051	1065	1217	556-569
		93.1	30.1	15694	2.9				57.7	79.9	-	-	43.3						
		118.1	11.9	39817	0.9				89.0	123.0	-	-	66.8						
	PLB 50003*	97.9	14.3	33007	1.0	25.0	17.5	250M/4D	83.7	115.6	-	-	62.7	998	-	879	894	1106	536-549
		76.5	18.3	25792	1.7				73.9	102.1	-	-	55.4						
		58.5	23.9	19723	2.1				69.4	95.9	-	-	52.1						
		154.3	18.1	26011	1.2				73.9	102.1	-	-	55.4						
		139.9	20.0	23583	1.0				73.9	102.1	-	-	55.4						
	PLB 50003*	118.1	23.7	19909	1.5	25.0	17.5	250M/2B	69.4	95.9	-	-	52.1	980	-	861	876	1088	536-549
		97.9	28.6	16503	1.8				65.9	91.0	-	-	49.4						
		76.5	36.6	12896	3.0				62.3	86.1	-	-	46.7						
		80.0	17.5	26972	1.0				67.7	95.9	-	-	50.8						
	PLB 35003*	66.4	21.1	22387	1.2	23.0	16.1	250M/4D	59.8	84.7	-	-	44.8	930	-	893	901	991	516-529
		52.7	26.6	17768	1.4				56.2	79.6	-	-	42.1						
		43.7	32.0	14733	1.6				53.3	75.5	-	-	40.0						
		123.0	22.8	20735	1.0				56.2	79.6	-	-	42.1						
		94.1	29.8	15863	1.3				53.3	75.5	-	-	40.0						
	PLB 35003*	80.0	35.0	13486	1.8	23.0	16.1	250M/2B	50.4	71.4	-	-	37.8	912	-	875	883	973	516-529
		66.4	42.2	11193	2.1				48.2	68.3	-	-	36.2						
		52.7	53.1	8884	2.5				44.6	63.2	-	-	33.5						
		43.7	64.1	7367	2.9				41.8	59.2	-	-	31.3						
		80.0	17.5	26972	0.8				42.3	64.4	-	-	31.7						
	PLB 30003*	66.4	21.1	22387	0.9	23.0	16.1	250M/4D	37.4	56.9	-	-	28.0	924	-	885	895	985	496-509
		52.7	26.6	17768	1.2				35.1	53.4	-	-	26.3						
		104.5	26.8	17616	1.2				35.1	53.4	-	-	26.3						
	PLB 30003*	80.0	35.0	13486	1.5	23.0	16.1	250M/2B	31.5	48.0	-	-	23.6	906	-	867	877	967	496-509
		66.4	42.2	11193	1.7				30.2	45.9	-	-	22.6						
		52.7	53.1	8884	2.0				27.9	42.5	-	-	20.9						
		69.1	20.3	23297	0.9				37.4	56.9	-	-	28.0						
	PLB 25003*	61.2	22.9	20633	1.0	20.0	14.0	250M/4D	35.1	53.4	-	-	26.3	833	-	797	805	896	476-489
		50.7	27.6	17093	1.2				33.3	50.7	-	-	25.0						
		125.4	22.3	21139	0.8				37.4	56.9	-	-	28.0						
		104.2	26.9	17565	0.9				35.1	53.4	-	-	26.3						
		96.4	29.0	16251	1.2				33.3	50.7	-	-	25.0						
	PLB 25003*	89.8	31.2	15138	1.0	20.0	14.0	250M/2B	33.3	50.7	-	-	25.0	815	-	779	787	878	476-489
		79.6	35.2	13418	1.1				31.5	48.0	-	-	23.6						
		69.1	40.5	11648	1.6				30.2	45.9	-	-	22.6						
		61.2	45.8	10317	1.8				29.3	44.5	-	-	21.9						
		50.7	55.2	8547	2.1				27.9	42.5	-	-	20.9						

* Soğutucu gereklidir / Cooling is required / Kühlung ist erforderlich / È richiesto raffreddamento / Le refroidissement est nécessaire / Se requiere un enfriamiento

P1 (kW)		iges	n2 (rpm)	M2 (Nm)	fs	Pt (20°C) (kW)	Pt (40°C) (kW)	Motor IE2	FR (kN)					~ Kg					mm
									MC	MS	PC	PS	CPC	M...	P...	F	FS	CPC	
55.00	PLB 18003*	85.7 71.2 54.4	32.7 39.3 51.5	14447 12002 9170	0.8 0.9 1.2	17.0	11.9	250M/2B	21.0 20.1 19.2	37.1 35.5 33.9	49.0 46.9 44.8	65.1 62.3 59.5	15.8 15.1 14.4	735	762	704	740	785	452-469
	PLB 16003*	46.4	30.2	15644	0.8	15.0	10.5	250M/4D	22.2	39.2	51.8	68.8	16.7	747	774	716	752	797	428-445
	PLB 16003*	76.5 61.1 50.7 46.4	36.6 45.8 55.2 60.3	12896 10300 8547 7822	0.8 0.9 1.2 1.3	15.0	10.5	250M/2B	21.0 19.5 18.6 17.7	37.1 34.5 32.9 31.3	49.0 45.5 43.4 41.3	65.1 60.5 57.7 54.9	15.8 14.6 14.0 13.3	729	756	698	734	779	428-445
	PLB 10003*	50.7 46.4	55.2 60.3	8547 7822	0.8 0.9	15.0	10.5	250M/2B	20.2 19.2	29.5 28.0	- -	- -	15.1 14.4	721	-	689	726	771	410-421
	PLB 50002*	28.0	50.0	9783	2.1	38.0	26.6	250M/4D	57.0	78.7	-	-	42.7	952	-	894	907	1056	536-549
	PLB 35002*	22.0	63.6	7686	2.4	34.0	23.8	250M/4D	41.8	59.2	-	-	31.3	871	-	834	842	934	516-529
	PLB 25002*	29.2 24.3 19.2 16.0	47.9 57.6 72.9 87.5	10202 8490 6708 5590	1.1 1.6 1.5 2.3	30.0	21.0	250M/4D	28.8 26.6 25.2 23.9	43.8 40.4 38.4 36.3	- - - -	- - - -	21.6 19.9 18.9 17.9	865	-	828	836	928	476-489
	PLB 25002*	29.2 24.3 19.2	95.9 115.2 145.8	5101 4245 3354	1.9 2.9 2.7	30.0	21.0	250M/2B	23.2 21.8 20.7	35.3 33.2 31.5	- - -	- - -	17.4 16.4 15.5	847	-	810	818	910	476-489
	PLB 18002*	20.0 16.6 13.2 10.9	70.0 84.3 106.1 128.4	6988 5800 4612 3808	1.3 1.7 1.8 2.4	25.0	17.5	250M/4D	17.1 15.9 15.3 14.6	30.2 28.1 27.0 25.7	39.9 37.1 35.7 34.0	53.0 49.3 47.4 45.1	12.8 11.9 11.5 10.9	783	810	752	788	833	452-469
	PLB 18002*	20.0 16.6	140.0 168.7	3494 2900	2.2 3.0	25.0	17.5	250M/2B	13.8 13.4	24.4 23.6	32.2 31.2	42.8 41.4	10.4 10.0	765	792	734	770	815	452-469
	PLB 16002*	19.3 14.8 12.3	72.5 94.6 113.8	6743 5171 4297	1.0 1.6 2.2	23.0	16.1	250M/4D	16.8 15.5 14.6	29.7 27.3 25.7	39.2 36.1 34.0	52.1 47.9 45.1	12.6 11.6 10.9	728	755	697	733	778	428-445
	PLB 16002*	36.7 30.5 23.3 19.3 14.8	76.3 91.8 120.2 145.1 189.2	6411 5328 4070 3371 2585	0.8 1.2 1.1 1.7 2.8	23.0	16.1	250M/2B	16.8 15.6 14.6 13.8 12.8	29.7 27.6 25.7 24.4 22.5	39.2 36.4 34.0 32.2 29.8	52.1 48.4 45.1 42.8 39.5	12.6 11.7 10.9 10.4 9.6	710	737	679	715	760	428-445
	PLB 10002*	30.5 23.3 19.3 14.8 12.3	91.8 120.2 145.1 189.2 227.6	5328 4070 3371 2585 2149	0.8 0.8 1.2 1.9 2.6	23.0	16.1	250M/2B	16.9 15.8 15.0 13.8 13.2	24.7 23.0 21.9 20.2 19.2	- - - - -	- - - - -	12.7 11.8 11.2 10.4 9.9	702	-	670	707	752	410-421
	PLB 10002*	14.8 12.3	94.6 113.8	5171 4297	1.1 1.5	23.0	16.1	250M/4D	16.7 15.8	24.5 23.0	- -	- -	12.6 11.8	720	-	688	725	770	410-421
	PLB 7002*	12.7	110.2	4437	0.8	18.0	12.6	250M/4D	-	-	27.9	33.5	20.9	-	690	671	693	706	392-403
	PLB 7002*	24.1 17.3 15.3 12.7	116.2 161.8 183.0 220.5	4210 3022 2673 2219	0.8 0.9 1.1 1.5	18.0	12.6	250M/2B	- - - -	- - - -	27.9 25.6 24.4 23.3	33.5 30.7 29.3 27.9	20.9 19.2 18.3 17.5	-	672	653	675	688	392-403
	PLB 5002*	14.2 13.1	197.2 213.7	2481 2288	0.9 1.0	15.0	10.5	250M/2B	7.3 7.1	9.3 9.1	13.1 12.8	15.1 14.8	9.8 9.6	618	627	610	620	631	370-385
75.00	PLB 90004*	506.9 419.7 390.0 322.9 266.3 247.4	5.5 6.7 7.2 8.7 10.5 11.3	112444 93101 86513 71628 59073 54880	0.8 0.9 1.0 1.1 1.3 1.4	30.0	21.0	280M/2B	186.0 178.3 178.3 162.8 155.0 155.0	259.2 248.4 248.4 226.8 216.0 216.0	- - - - - -	- - - - - -	139.5 133.7 133.7 122.1 116.3 116.3	1384	-	1288	1310	1558	576-585
	PLB 90004*	247.4	5.7	109760	0.8	30.0	21.0	280M/4B	186.0	259.2	-	-	139.5	1432	-	1336	1358	1606	576-585
	PLB 65004*	305.2 265.0 252.7 234.7 194.4	9.2 10.6 11.1 11.9 14.4	67702 58784 56056 52063 43123	0.8 0.9 1.0 1.0 1.2	25.0	17.5	280M/2B	81.9 78.0 78.0 78.0 73.3	113.4 108.0 108.0 108.0 101.5	- - - - -	- - - - -	61.4 58.5 58.5 58.5 55.0	1178	-	1116	1130	1282	556-569
	PLB 50004*	289.0 241.5	9.7 11.6	64108 53571	0.8 0.9	20.0	14.0	280M/2B	89.0 89.0	123.0 123.0	- -	- -	66.8 66.8	1089	-	1031	1044	1197	536-549

* Soğutucu gereklidir / Cooling is required / Kühlung ist erforderlich / È richiesto raffreddamento / Le refroidissement est nécessaire / Se requiere un enfriamiento

P1 (kW)		iges	n2 (rpm)	M2 (Nm)	fs	Pt (20°C) (kW)	Pt (40°C) (kW)	Motor IE2	FR (kN) MC	MS	PC	PS	CPC	~ Kg M…	P…	F	FS	CPC	mm
75.00	PLB 90003*	149.3	9.4	68640	0.9	45.0	31.5	280M/4B	162.8	226.8	-	-	122.1	1411	-	1315	1337	1585	576-585
		124.2	11.3	57101	1.1				155.0	216.0	-	-	116.3						
		95.5	14.7	43906	1.3				145.7	203.0	-	-	109.3						
		81.7	17.1	37561	1.5				145.7	203.0	-	-	109.3						
		64.6	21.7	29700	2.3				128.7	179.3	-	-	96.5						
		49.7	28.2	22849	2.9				114.7	159.8	-	-	86.0						
	PLB 90003*	149.3	18.8	34320	1.6	45.0	31.5	280M/2B	128.7	179.3	-	-	96.5	1363	-	1267	1289	1537	576-585
		124.2	22.5	28550	1.9				120.9	168.5	-	-	90.7						
		95.5	29.3	21953	2.4				114.7	159.8	-	-	86.0						
		81.7	34.3	18781	2.7				108.5	151.2	-	-	81.4						
	PLB 65003*	111.9	12.5	51446	1.0	35.0	24.5	280M/4B	73.3	101.5	-	-	55.0	1251	-	1189	1203	1355	556-569
		93.1	15.0	42802	1.2				73.3	101.5	-	-	55.0						
		71.6	19.6	32918	1.5				64.7	89.6	-	-	48.6						
		61.3	22.8	28182	1.7				60.8	84.2	-	-	45.6						
		47.1	29.7	21654	2.1				57.7	79.9	-	-	43.3						
	PLB 65003*	111.9	25.0	25723	1.8	35.0	24.5	280M/2B	60.8	84.2	-	-	45.6	1203	-	1141	1155	1307	556-569
		93.1	30.1	21401	2.1				57.7	79.9	-	-	43.3						
		71.6	39.1	16459	2.6				52.3	72.4	-	-	39.2						
		61.3	45.7	14091	3.0				50.7	70.2	-	-	38.0						
	PLB 50003*	154.3	18.1	35469	0.9	25.0	17.5	280M/2B	73.9	102.1	-	-	55.4	1070	-	951	966	1178	536-549
		139.9	20.0	32159	0.8				73.9	102.1	-	-	55.4						
		118.1	23.7	27148	1.1				69.4	95.9	-	-	52.1						
		97.9	28.6	22505	1.3				65.9	91.0	-	-	49.4						
		76.5	36.6	17585	2.2				62.3	86.1	-	-	46.7						
		58.5	47.9	13448	2.7				57.0	78.7	-	-	42.7						
	PLB 50003*	76.5	18.3	35171	1.2	25.0	17.5	280M/4B	73.9	102.1	-	-	55.4	1118	-	999	1014	1226	536-549
		58.5	23.9	26895	1.5				69.4	95.9	-	-	52.1						
	PLB 35003*	66.4	21.1	30527	0.8	23.0	16.1	280M/4B	59.8	84.7	-	-	44.8	1050	-	1013	1021	1111	516-529
		52.7	26.6	24229	1.0				56.2	79.6	-	-	42.1						
		43.7	32.0	20091	1.2				53.3	75.5	-	-	40.0						
	PLB 35003*	123.0	22.8	28274	0.8	23.0	16.1	280M/2B	56.2	79.6	-	-	42.1	1002	-	965	973	1063	516-529
		94.1	29.8	21631	1.0				53.3	75.5	-	-	40.0						
		80.0	35.0	18390	1.3				50.4	71.4	-	-	37.8						
		66.4	42.2	15264	1.5				48.2	68.3	-	-	36.2						
		52.7	53.1	12114	1.8				44.6	63.2	-	-	33.5						
		43.7	64.1	10045	2.1				41.8	59.2	-	-	31.3						
	PLB 30003*	52.7	26.6	24229	0.8	23.0	16.1	280M/4B	35.1	53.4	-	-	26.3	1044	-	1005	1015	1105	496-509
	PLB 30003*	104.5	26.8	24022	0.9	23.0	16.1	280M/2B	35.1	53.4	-	-	26.3	996	-	957	967	1057	496-509
		80.0	35.0	18390	1.1				31.5	48.0	-	-	23.6						
		66.4	42.2	15264	1.2				30.2	45.9	-	-	22.6						
		52.7	53.1	12114	1.5				27.9	42.5	-	-	20.9						
	PLB 25003*	50.7	27.6	23309	0.9	20.0	14.0	280M/4B	33.3	50.7	-	-	25.0	953	-	917	925	1016	476-489
	PLB 25003*	96.4	29.0	22160	0.9	20.0	14.0	280M/2B	33.3	50.7	-	-	25.0	905	-	869	877	968	476-489
		79.6	35.2	18298	0.8				31.5	48.0	-	-	23.6						
		69.1	40.5	15884	1.2				30.2	45.9	-	-	22.6						
		61.2	45.8	14068	1.3				29.3	44.5	-	-	21.9						
		50.7	55.2	11655	1.5				27.9	42.5	-	-	20.9						
	PLB 18003*	54.4	51.5	12505	0.8	17.0	11.9	280M/2B	19.2	33.9	44.8	59.5	14.4	825	852	794	830	875	452-469
	PLB 16003*	50.7	55.2	11655	0.9	15.0	10.5	280M/2B	18.6	32.9	43.4	57.7	14.0	819	846	788	824	869	428-445
		46.4	60.3	10666	1.0				17.7	31.3	41.3	54.9	13.3						
	PLB 50002*	28.0	50.0	13340	1.6	38.0	26.6	280M/4B	57.0	78.7	-	-	42.7	1072	-	1014	1027	1176	536-549
		23.6	59.3	11244	2.3				52.5	72.6	-	-	39.4						
		18.4	76.1	8766	2.3				49.8	68.9	-	-	37.4						
	PLB 50002*	28.0	100.0	6670	2.8	38.0	26.6	280M/2B	45.4	62.7	-	-	34.0	1024	-	966	979	1128	536-549
	PLB 35002*	22.0	63.6	10481	1.7	34.0	23.8	280M/4B	41.8	59.2	-	-	31.3	991	-	954	962	1054	516-529
		18.7	74.9	8909	2.3				40.3	57.1	-	-	30.2						
		14.5	96.6	6908	2.5				37.1	52.5	-	-	27.8						
	PLB 25002*	29.2	47.9	13912	0.8	30.0	21.0	280M/4B	28.8	43.8	-	-	21.6	985	-	948	956	1048	476-489
		24.3	57.6	11577	1.2				26.6	40.4	-	-	19.9						
		19.2	72.9	9147	1.1				25.2	38.4	-	-	18.9						
		16.0	87.5	7623	1.7				23.9	36.3	-	-	17.9						
		12.3	113.8	5860	2.7				21.8	33.2	-	-	16.4						
	PLB 25002*	29.2	95.9	6956	1.4	30.0	21.0	280M/2B	23.2	35.3	-	-	17.4	937	-	900	908	1000	476-489
		24.3	115.2	5789	2.1				21.8	33.2	-	-	16.4						
		19.2	145.8	4574	2.0				20.7	31.5	-	-	15.5						
		16.0	175.0	3811	3.0				19.1	29.1	-	-	14.3						

* Soğutucu gereklidir / Cooling is required / Kühlung ist erforderlich / È richiesto raffreddamento / Le refroidissement est nécessaire / Se requiere un enfriamiento

P1 (kW)		iges	n2 (rpm)	M2 (Nm)	fs	Pt (20°C) (kW)	Pt (40°C) (kW)	Motor IE2	FR (kN)					~ Kg					mm
									MC	MS	PC	PS	CPC	M...	P...	F	FS	CPC	
75.00	PLB 18002*	20.0 16.6 13.2 10.9	70.0 84.3 106.1 128.4	9528 7909 6289 5193	0.9 1.2 1.3 1.7	25.0	17.5	280M/4B	17.1 15.9 15.3 14.6	30.2 28.1 27.0 25.7	39.9 37.1 35.7 34.0	53.0 49.3 47.4 45.1	12.8 11.9 11.5 10.9	903	930	872	908	953	452-469
	PLB 18002*	20.0 16.6 13.2	140.0 168.7 212.1	4764 3954 3144	1.6 2.2 2.3	25.0	17.5	280M/2B	13.8 13.4 12.2	24.4 23.6 21.5	32.2 31.2 28.4	42.8 41.4 37.7	10.4 10.0 9.1	855	882	824	860	905	452-469
	PLB 16002*	30.5 23.3 19.3 14.8 12.3	91.8 120.2 145.1 189.2 227.6	7265 5550 4597 3526 2930	0.9 0.8 1.3 2.1 2.8	23.0	16.1	280M/2B	15.6 14.6 13.8 12.8 12.2	27.6 25.7 24.4 22.5 21.5	36.4 34.0 32.2 29.8 28.4	48.4 45.1 42.8 39.5 37.7	11.7 10.9 10.4 9.6 9.1	800	827	769	805	850	428-445
	PLB 16002*	14.8 12.3	94.6 113.8	7051 5860	1.2 1.6	23.0	16.1	280M/4B	15.5 14.6	27.3 25.7	36.1 34.0	47.9 45.1	11.6 10.9	848	875	817	853	898	428-445
	PLB 10002*	14.8 12.3	94.6 113.8	7051 5860	0.8 1.1	23.0	16.1	280M/4B	16.7 15.8	24.5 23.0	- -	- -	12.6 11.8	840	-	808	845	890	410-421
	PLB 10002*	19.3 14.8 12.3	145.1 189.2 227.6	4597 3526 2930	0.9 1.4 1.9	23.0	16.1	280M/2B	15.0 13.8 13.2	21.9 20.2 19.2	- - -	- - -	11.2 10.4 9.9	792	-	760	797	842	410-421
	PLB 7002*	15.3 12.7	183.0 220.5	3645 3025	0.8 1.1	18.0	12.6	280M/2B	- -	- -	24.4 23.3	29.3 27.9	18.3 17.5	-	762	743	765	778	392-403
	PLB 5002*	13.1	213.7	3121	0.8	15.0	10.5	280M/2B	7.1	9.1	12.8	14.8	9.6	708	717	700	710	721	370-385
90.00	PLB 90004*	390.0 322.9 266.3 247.4	7.2 8.7 10.5 11.3	103815 85954 70887 65856	1.2 1.1 0.9 0.8	30.0	21.0	280M/2C	178.3 162.8 155.0 155.0	248.4 226.8 216.0 216.0	- - - -	- - - -	133.7 122.1 116.3 116.3	1395	-	1299	1321	1569	576-585
	PLB 65004*	265.0 252.7 234.7 194.4	10.6 11.1 11.9 14.4	70541 67267 62476 51748	0.8 0.8 0.8 1.0	25.0	17.5	280M/2C	78.0 78.0 78.0 73.3	108.0 108.0 108.0 101.5	- - - -	- - - -	58.5 58.5 58.5 55.0	1189	-	1127	1141	1293	556-569
	PLB 90003*	149.3 124.2 95.5 81.7 64.6 49.7	9.4 11.3 14.7 17.1 21.7 28.2	82368 68521 52687 45074 35640 27419	0.8 0.9 1.1 1.3 1.9 2.4	45.0	31.5	280M/4C	162.8 155.0 145.7 145.7 128.7 114.7	226.8 216.0 203.0 203.0 179.3 159.8	- - - - - -	- - - - - -	122.1 116.3 109.3 109.3 96.5 86.0	1425	-	1329	1351	1599	576-585
	PLB 90003*	149.3 124.2 95.5 81.7	18.8 22.5 29.3 34.3	41184 34260 26343 22537	1.4 1.6 2.0 2.3	45.0	31.5	280M/2C	128.7 120.9 114.7 108.5	179.3 168.5 159.8 151.2	- - - -	- - - -	96.5 90.7 86.0 81.4	1374	-	1278	1300	1548	576-585
	PLB 65003*	111.9 93.1 71.6 61.3 47.1	12.5 15.0 19.6 22.8 29.7	61735 51363 39501 33819 25985	0.9 1.0 1.2 1.4 1.7	35.0	24.5	280M/4C	73.3 73.3 64.7 60.8 57.7	101.5 101.5 89.6 84.2 79.9	- - - - -	- - - - -	55.0 55.0 48.6 45.6 43.3	1265	-	1203	1217	1369	556-569
	PLB 65003*	111.9 93.1 71.6 61.3	25.0 30.1 39.1 45.7	30867 25681 19751 16909	1.5 1.8 2.2 2.5	35.0	24.5	280M/2C	60.8 57.7 52.3 50.7	84.2 79.9 72.4 70.2	- - - -	- - - -	45.6 43.3 39.2 38.0	1214	-	1152	1166	1318	556-569
	PLB 50003*	76.5 58.5	18.3 23.9	42205 32274	1.0 1.3	25.0	17.5	280M/4C	73.9 69.4	102.1 95.9	- -	- -	55.4 52.1	1132	-	1013	1028	1240	536-549
	PLB 50003*	118.1 97.9 76.5 58.5	23.7 28.6 36.6 47.9	32578 27006 21102 16137	0.9 1.1 1.8 2.3	25.0	17.5	280M/2C	69.4 65.9 62.3 57.0	95.9 91.0 86.1 78.7	- - - -	- - - -	52.1 49.4 46.7 42.7	1081	-	962	977	1189	536-549
	PLB 35003*	52.7 43.7	26.6 32.0	29074 24109	0.9 1.0	23.0	16.1	280M/4C	56.2 53.3	79.6 75.5	- -	- -	42.1 40.0	1064	-	1027	1035	1125	516-529
	PLB 35003*	94.1 80.0 66.4 52.7 43.7	29.8 35.0 42.2 53.1 64.1	25957 22068 18316 14537 12055	0.8 1.1 1.3 1.5 1.8	23.0	16.1	280M/2C	53.3 50.4 48.2 44.6 41.8	75.5 71.4 68.3 63.2 59.2	- - - - -	- - - - -	40.0 37.8 36.2 33.5 31.3	1013	-	976	984	1074	516-529
	PLB 30003*	80.0 66.4 52.7	35.0 42.2 53.1	22068 18316 14537	0.9 1.0 1.2	23.0	16.1	280M/2C	31.5 30.2 27.9	48.0 45.9 42.5	- - -	- - -	23.6 22.6 20.9	1007	-	968	978	1068	496-509

* Soğutucu gereklidir / Cooling is required / Kühlung ist erforderlich / È richiesto raffreddamento / Le refroidissement est nécessaire / Se requiere un enfriamiento

P1 (kW)		iges	n2 (rpm)	M2 (Nm)	fs	Pt (20°C) (kW)	Pt (40°C) (kW)	Motor IE2	FR (kN)					~ Kg					mm
									MC	MS	PC	PS	CPC	M...	P...	F	FS	CPC	
90.00	PLB 25003*	96.4 69.1 61.2 50.7	29.0 40.5 45.8 55.2	26592 19061 16882 13985	0.8 1.0 1.1 1.3	20.0	14.0	280M/2C	33.3 30.2 29.3 27.9	50.7 45.9 44.5 42.5	- - - -	- - - -	25.0 22.6 21.9 20.9	916	-	880	888	979	476-489
	PLB 16003*	46.4	60.3	12799	0.8	15.0	10.5	280M/2C	17.7	31.3	41.3	54.9	13.3	830	857	799	835	880	428-445
	PLB 50002*	28.0 23.6 18.4 15.5	50.0 59.3 76.1 90.3	16008 13492 10519 8861	1.3 1.9 1.9 2.7	38.0	26.6	280M/4C	57.0 52.5 49.8 46.3	78.7 72.6 68.9 64.0	- - - -	- - - -	42.7 39.4 37.4 34.7	1086	-	1028	1041	1190	536-549
	PLB 50002*	28.0	100.0	8004	2.4	38.0	26.6	280M/2C	45.4	62.7	-	-	34.0	1035	-	977	990	1139	536-549
	PLB 35002*	22.0 18.7 14.5 12.3	63.6 74.9 96.6 113.8	12578 10691 8290 7032	1.5 1.9 2.1 2.7	34.0	23.8	280M/4C	41.8 40.3 37.1 34.9	59.2 57.1 52.5 49.5	- - - -	- - - -	31.3 30.2 27.8 26.2	1005	-	968	976	1068	516-529
	PLB 35002*	22.0	127.3	6289	2.6	34.0	23.8	280M/2C	34.9	49.5	-	-	26.2	954	-	917	925	1017	516-529
	PLB 25002*	24.3 19.2 16.0 12.3	57.6 72.9 87.5 113.8	13892 10977 9147 7032	1.0 0.9 1.4 2.3	30.0	21.0	280M/4C	26.6 25.2 23.9 21.8	40.4 38.4 36.3 33.2	- - - -	- - - -	19.9 18.9 17.9 16.4	999	-	962	970	1062	476-489
	PLB 25002*	29.2 24.3 19.2 16.0	95.9 115.2 145.8 175.0	8347 6946 5488 4574	1.2 1.8 1.6 2.5	30.0	21.0	280M/2C	23.2 21.8 20.7 19.1	35.3 33.2 31.5 29.1	- - - -	- - - -	17.4 16.4 15.5 14.3	948	-	911	919	1011	476-489
	PLB 18002*	20.0 16.6 13.2 10.9	70.0 84.3 106.1 128.4	11434 9490 7547 6232	0.8 1.0 1.1 1.4	25.0	17.5	280M/4C	17.1 15.9 15.3 14.6	30.2 28.1 27.0 25.7	39.9 37.1 35.7 34.0	53.0 49.3 47.4 45.1	12.8 11.9 11.5 10.9	917	944	886	922	967	452-469
	PLB 18002*	20.0 16.6 13.2 10.9	140.0 168.7 212.1 256.9	5717 4745 3773 3116	1.4 1.8 1.9 2.6	25.0	17.5	280M/2C	13.8 13.4 12.2 11.6	24.4 23.6 21.5 20.4	32.2 31.2 28.4 27.0	42.8 41.4 37.7 35.8	10.4 10.0 9.1 8.7	866	893	835	871	916	452-469
	PLB 16002*	14.8 12.3	94.6 113.8	8461 7032	1.0 1.3	23.0	16.1	280M/4C	15.5 14.6	27.3 25.7	36.1 34.0	47.9 45.1	11.6 10.9	862	889	831	867	912	428-445
	PLB 16002*	19.3 14.8 12.3	145.1 189.2 227.6	5517 4231 3516	1.1 1.7 2.4	23.0	16.1	280M/2C	13.8 12.8 12.2	24.4 22.5 21.5	32.2 29.8 28.4	42.8 39.5 37.7	10.4 9.6 9.1	811	838	780	816	861	428-445
	PLB 10002*	12.3	113.8	7032	0.9	23.0	16.1	280M/4C	15.8	23.0	-	-	11.8	854	-	822	859	904	410-421
	PLB 10002*	14.8 12.3	189.2 227.6	4231 3516	1.2 1.6	23.0	16.1	280M/2C	13.8 13.2	20.2 19.2	- -	- -	10.4 9.9	803	-	771	808	853	410-421
	PLB 7002*	12.7	220.5	3630	0.9	18.0	12.6	280M/2C	-	-	23.3	27.9	17.5	-	773	754	776	789	392-403

* Soğutucu gereklidir / Cooling is required / Kühlung ist erforderlich / È richiesto raffreddamento / Le refroidissement est nécessaire / Se requiere un enfriamiento

TEKNİK VERİLER / TECHNICAL DATA / TECHNISCHE DATEN / DATI TECNICI / DONNÉES TECHNIQUES / DATOS TÉCNICAS

	i_{ges}	M_2max (n1: 1400rpm) (Nm)
1001	3.56 ... 8.67	470
1002	12.6 ... 58.5	660
1003	54.2 ... 394.9	940
1004	337.4 ... 3422.2	1340

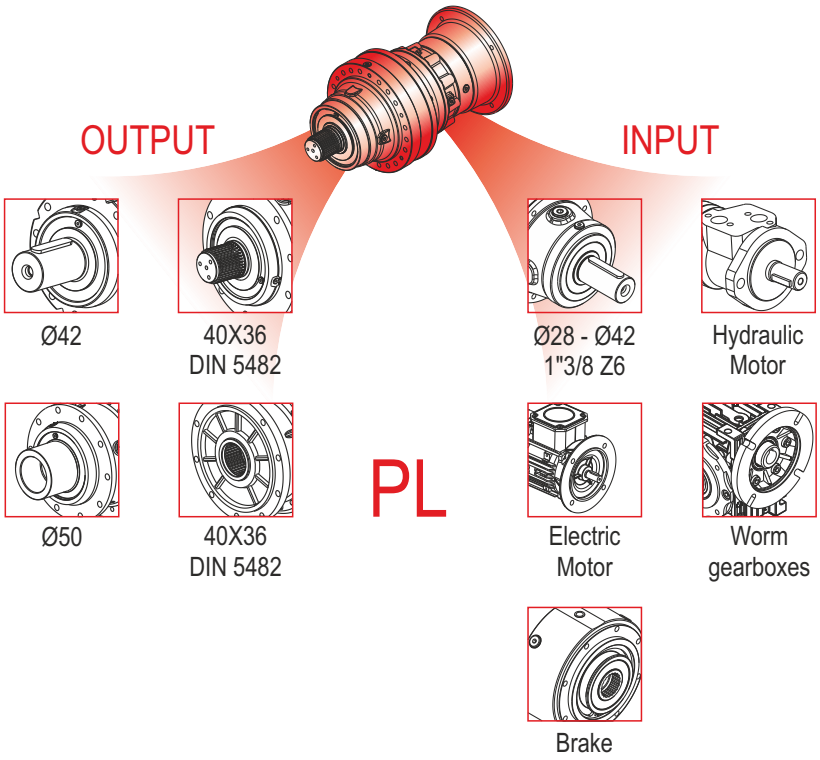

	i_{ges}	M_2max (n1: 1400rpm) (Nm)
1002	10.4 ... 19.8	570
1003	37.1 ... 171.6	800
1004	131.8 ... 1487.2	1140

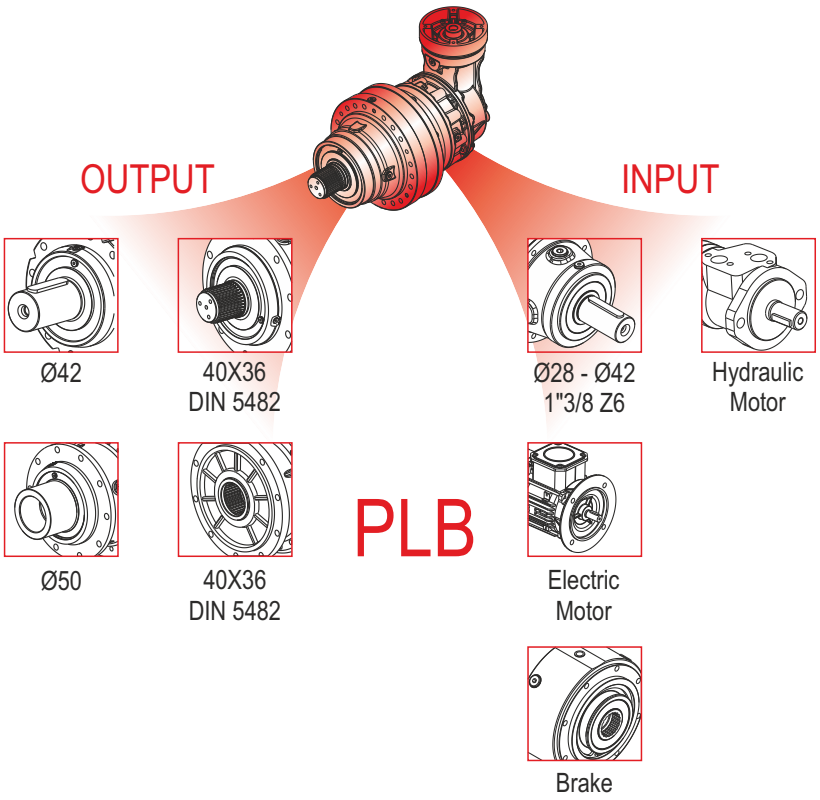

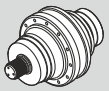	Pt [kW]	n_{1max} [min^{-1}]	i_{ges}	Mc [kNm] n_2 x h 10.000	Mc [kNm] n_2 x h 20.000	Mc [kNm] n_2 x h 50.000	Mc [kNm] n_2 x h 100.000	Giriş- Input - Antrieb - Entrata - Entrée - Entrada IEC (B5)	PMRV / PRV	EL - EML EM - EP - ET
PL 1001	12	2800	3.56 4.29 5.60 6.75 8.67	1.26 1.26 0.92 0.81 0.52	1.12 1.12 0.82 0.71 0.46	0.96 0.96 0.69 0.61 0.39	0.85 0.85 0.61 0.54 0.35	63 | 100 71 | 112 80 | 132 90 | 160	050 063 075 090	EL C 28 EL C 42 EML 42 EML 1"3/8 Z6
PL 1002	8	2800	12.6 15.2 19.9 24.0 28.9 31.4 37.8 45.6 58.5	1.26 1.26 1.26 1.26 1.26 0.92 0.92 0.81 0.81	1.12 1.12 1.12 1.12 1.12 0.82 0.82 0.71 0.71	0.96 0.96 0.96 0.96 0.96 0.69 0.69 0.61 0.61	0.85 0.85 0.85 0.85 0.85 0.61 0.61 0.54 0.54	63 71 80 90 100 112 132	050 063 075 090	EL C 28 EL C 42 EML 42 EML 1"3/8 Z6
PL 1003	5	2800	54.2 65.3 70.8 78.7 85.3 102.9 111.5 134.4 162.0 172.6 208.0 211.7 255.2 271.8 307.5 327.6 394.9	1.26 1.26 1.26 1.26 1.26 1.26 1.26 1.26 1.26 1.26 1.26 0.92 0.92 0.92 0.81 0.92 0.81	1.12 1.12 1.12 1.12 1.12 1.12 1.12 1.12 1.12 1.12 1.12 0.82 0.82 0.82 0.71 0.82 0.71	0.96 0.96 0.96 0.96 0.96 0.96 0.96 0.96 0.96 0.96 0.96 0.69 0.69 0.69 0.61 0.69 0.61	0.85 0.85 0.85 0.85 0.85 0.85 0.85 0.85 0.85 0.85 0.85 0.61 0.61 0.61 0.54 0.61 0.54	63 71 80 90 100 112 132	050 063 075 090	EL C 28 EL C 42 EML 42 EML 1"3/8 Z6
PL 1004	1.5	2800	337.4 365.7 396.4 440.8 477.9 531.3 576.0 624.4 694.3 752.6 836.9 907.2 966.3 1093.5 1144.5 1185.4 1318.1 1428.8 1692.3 3422.2	1.26 1.26 1.26 1.26 1.26 1.26 1.26 1.26 1.26 1.26 1.26 1.26 1.26 1.26 1.26 0.92 1.26 0.92 1.26 0.81	1.12 1.12 1.12 1.12 1.12 1.12 1.12 1.12 1.12 1.12 1.12 1.12 1.12 1.12 1.12 0.82 1.12 0.82 1.12 0.71	0.96 0.96 0.96 0.96 0.96 0.96 0.96 0.96 0.96 0.96 0.96 0.96 0.96 0.96 0.96 0.69 0.96 0.69 0.96 0.61	0.85 0.85 0.85 0.85 0.85 0.85 0.85 0.85 0.85 0.85 0.85 0.85 0.85 0.85 0.85 0.61 0.85 0.61 0.85 0.54	63 71 80 90	050 063 075 090	EL C 28 EL C 42 EML 42 EML 1"3/8 Z6

	Pt [kW]	n_{1max} [min^{-1}]	i_{ges}	Mc [kNm]				Giriş- Input - Antrieb - Entrata - Entrée - Entrada	
				n_2 x h	n_2 x h	n_2 x h	n_2 x h		
				10.000	20.000	50.000	100.000	IEC (B5)	EL - EML EM - EP - ET
PLB 1002	8	2800	10.4 12.6 16.4 19.8	1.26 1.26 0.92 0.81	1.12 1.12 0.82 0.71	0.96 0.96 0.69 0.61	0.85 0.85 0.61 0.54	80 90 100 112 132	EL C 28 EL C 42 EML 42 EML 1"3/8 Z6
PLB 1003	5	2800	37.1 44.7 53.9 58.4 70.4 84.9 92.0 110.9 133.6 171.6	1.26 1.26 1.26 1.26 1.26 1.26 0.92 0.92 0.81 0.81	1.12 1.12 1.12 1.12 1.12 1.12 0.82 0.82 0.71 0.71	0.96 0.96 0.96 0.96 0.96 0.96 0.69 0.69 0.61 0.61	0.85 0.85 0.85 0.85 0.85 0.85 0.61 0.61 0.54 0.54	80 90 100 112 132	EL C 28 EL C 42 EML 42 EML 1"3/8 Z6
PLB 1004	1.5	2800	131.8 158.9 191.6 207.7 230.9 301.7 327.1 363.7 394.2 475.2 515.1 572.8 610.1 735.4 797.2 960.9 1158.3 1233.8 1487.2	1.26 1.26 1.26 1.26 1.26 1.26 1.26 1.26 1.26 1.26 0.92 1.26 1.26 1.26 0.92 0.92 0.81 0.92 0.81	1.12 1.12 1.12 1.12 1.12 1.12 1.12 1.12 1.12 1.12 0.82 1.12 1.12 1.12 0.82 0.82 0.71 0.82 0.71	0.96 0.96 0.96 0.96 0.96 0.96 0.96 0.96 0.96 0.96 0.69 0.96 0.96 0.96 0.69 0.69 0.61 0.69 0.61	0.85 0.85 0.85 0.85 0.85 0.85 0.85 0.85 0.85 0.85 0.61 0.85 0.85 0.85 0.61 0.61 0.54 0.61 0.54	80 90	EL C 28 EL C 42 EML 42 EML 1"3/8 Z6

(n_2 x h = 20.000)

$$M_{max} = M_c \times 2$$

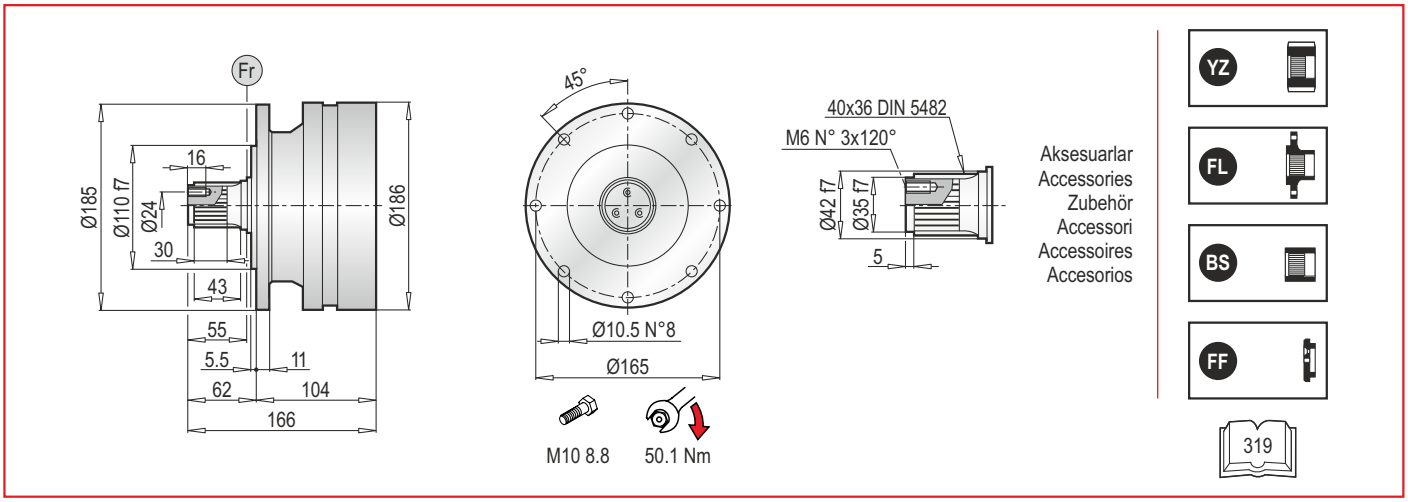

PL 1000 MS - Elektrik Motor Adaptörleri (IEC) / Electrıc Motor Couplings (IEC) /Anbauvorrichtung Für Elektromotore (IEC) / Predisposizioni Per Motori Elettrici (IEC) / Adaptations Pour Moteurs Electriques (IEC) /Acoplamientos Para Motores Eléctricos (IEC)

PL	IEC 63			IEC 71			IEC 80			IEC 90		
	LT	Z	ØD	LT	Z	ØD	LT	Z	ØD	LT	Z	ØD
1001	140	36	140	140	36	160	160	56	200	160	56	200
1002	188			188			208			208		
1003	236			236			256			256		
1004	284			284			304			304		

PL	IEC 100			IEC 112			IEC 132			IEC160		
	LT	Z	ØD	LT	Z	ØD	LT	Z	ØD	LT	Z	ØD
1001	170	66	250	170	66	250	204	100	300	243	139	350
1002	218			218			252			-		
1003	266			266			300			-		
1004	-			-			-			-		

PL	IEC ~ Kg							
	63	71	80	90	100	112	132	160
1001	19	19	21	21	22	22	26	36
1002	25	25	27	27	28	28	34	-
1003	31	31	33	33	34	34	40	-
1004	37	37	39	39	-	-	-	-

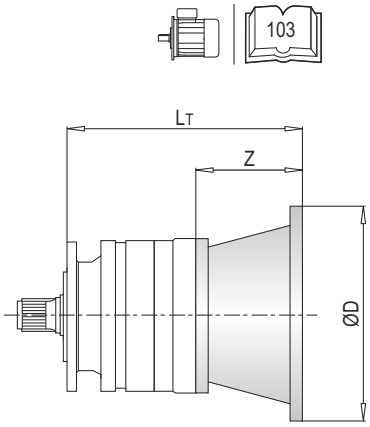

PL 1000 MS - Giriş Milleri / Input Shafts / Antriebswellen / Alberi Entrata / Arbres D'entree / Ejes De Entrada

PL	EL C 28				EL C 42				EML 42				EML 1"3/8 Z6			
	LT	Z	L	Ød	LT	Z	L	Ød	LT	Z	L	Ød	LT	Z	L	Ød
1001	168	64	50	28	168	64	82	42	198	94	82	42	198	94	106	1"3/8
1002	216				216				246				246			
1003	264				264				294				294			
1004	312				312				342				342			

PL	~ Kg			
	EL C 28	EL C 42	EML 42	EML 1"3/8 Z6
1001	19.5	20.0	23.0	23.0
1002	25.5	26.0	29.0	29.0
1003	31.5	32.0	35.0	35.0
1004	37.5	38.0	41.0	41.0

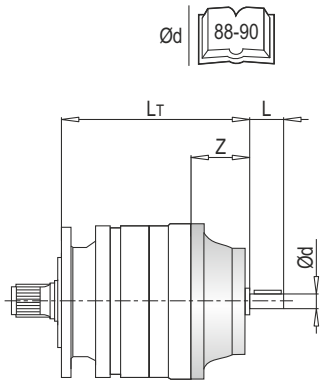

PL 1000 MS - Sonsuz Dişlili Redüktör Adaptörleri (PMRV/PRV) / Worm Gearbox Adaptors (PMRV/PRV) / Anschluss Für Schneckengetriebe (PMRV/PRV) / Predisposizioni Per Riduttori A Vite Senza Fine (PMRV/PRV) / Adaptation Pour Reducteurs A Vis Sans Fin (PMRV/PRV) / Acoplamiento Para Reductores De Tornillo Sin Fin (PMRV/PRV)

PL	PMRV/PRV 050					PMRV/PRV 063				
	LM	l	h	MA	G	LM	l	h	MA	G
1001	229.5	50	110	60	80	239	63	135	72	95
1002	277.5					287				
1003	325.5					335				
1004	373.5					383				

PL	PMRV/PRV 075					PMRV/PRV 090				
	LM	l	h	MA	G	LM	l	h	MA	G
1001	218	75	161	86	112.5	228	90	193	103	129.5
1002	266					276				
1004	314					324				
1004	362					372				

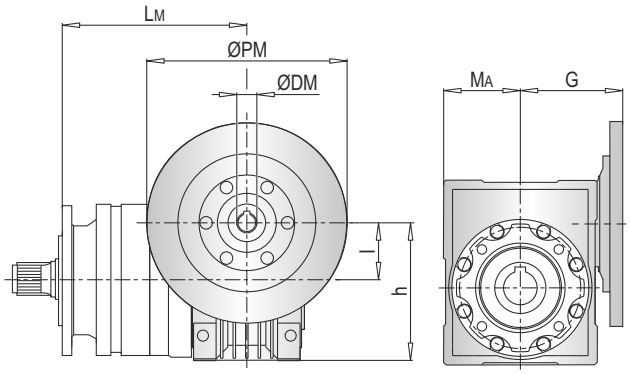

ØPM
ØDM
105

PL	PMRV/PRV ~ Kg			
	050	063	075	090
1001	22	25.5	28	33
1002	28	31.5	34	39
1004	34	37.5	40	45
1004	40	43.5	46	51

PLB 1000 MS - Elektrik Motor Adaptörleri (IEC) / Electric Motor Couplings (IEC) / Anbauvorrichtung Für Elektromotore (IEC) / Predisposizioni Per Motori Elettrici (IEC) / Adaptations Pour Moteurs Electriques (IEC) / Acoplamientos Para Motores Eléctricos (IEC)

PLB	IEC 80				IEC 90				IEC 100				IEC 112			
	A	LT	Z	ØD	A	LT	Z	ØD	A	LT	Z	ØD	A	LT	Z	ØD
1002	179	216	56	200	179	216	56	200	179	226	66	250	179	226	66	250
1003	227				227				227				227			
1004	275				275				-				-			

PLB	IEC 132			
	A	LT	Z	ØD
1002	179	260	100	300
1003	227			
1004	-			

PLB	IEC ~ Kg				
	80	90	100	112	132
1002	36	36	37	37	41
1003	42	42	43	43	47
1004	48	48	-	-	-

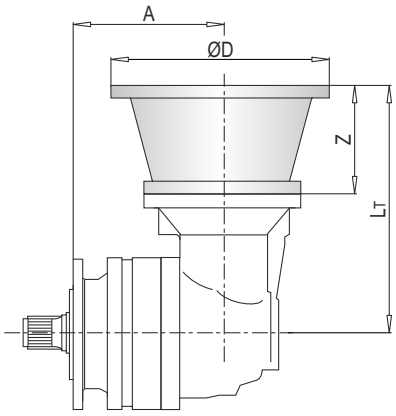

103

PLB 1000 MS - Giriş Milleri / Input Shafts / Antriebswellen / Alberi Entrata / Arbres D'entree / Ejes De Entrada

PLB	EL C 28					EL C 42					EML 42					EML 1"3/8 Z6				
	A	LT	Z	L	Ød	A	LT	Z	L	Ød	A	LT	Z	L	Ød	A	LT	Z	L	Ød
1002	179	224	64	50	28	179	224	64	82	42	179	254	94	82	42	179	254	94	106	1"3/8
1003	227					227					227					227				
1004	275					275					275					275				

PLB	~ Kg			
	EL C 28	EL C 42	EML 42	EML 1"3/8 Z6
1002	34.5	35.0	38.0	38.0
1003	40.5	41.0	44.0	44.0
1004	46.5	47.0	50.0	50.0

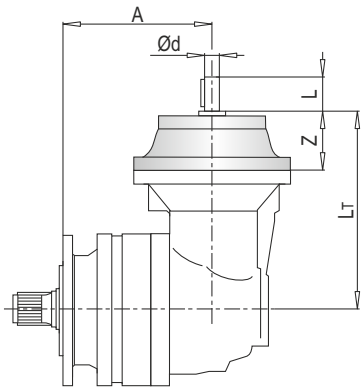

Ød
88-90

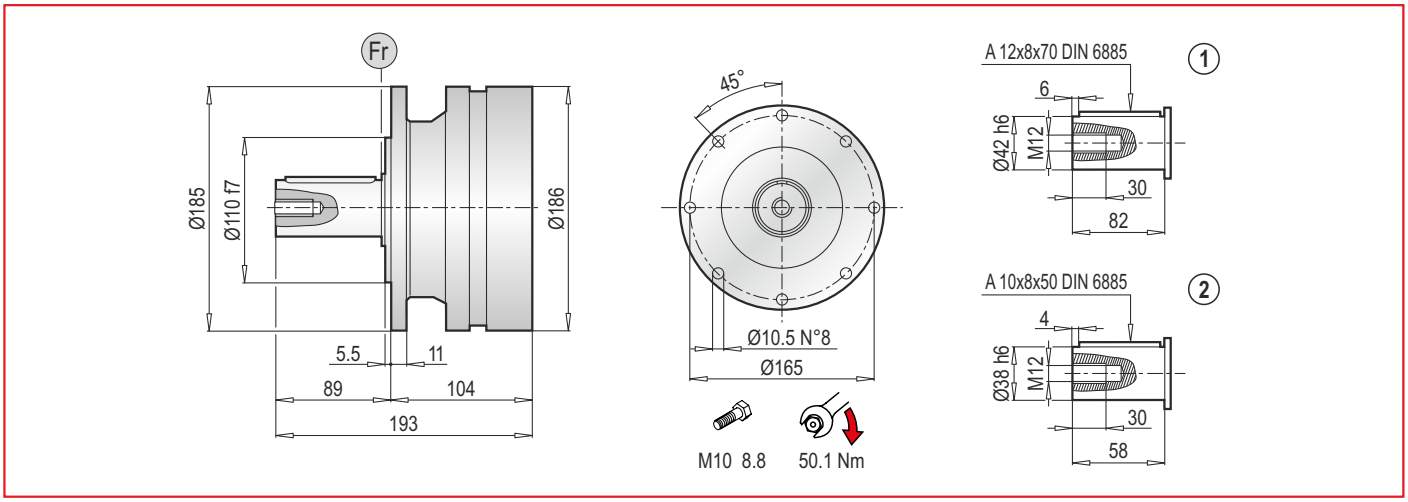

PL 1000 MC - Elektrik Motor Adaptörleri (IEC) / Electrıc Motor Couplings (IEC) /Anbauvorrichtung Für Elektromotore (IEC) / Predisposizioni Per Motori Elettrici (IEC) / Adaptations Pour Moteurs Electriques (IEC) /Acoplamientos Para Motores Eléctricos (IEC)

PL	IEC 63			IEC 71			IEC 80			IEC 90		
	LT	Z	ØD	LT	Z	ØD	LT	Z	ØD	LT	Z	ØD
1001	140	36	140	140	36	160	160	56	200	160	56	200
1002	188			188			208			208		
1003	236			236			256			256		
1004	284			284			304			304		

PL	IEC 100			IEC 112			IEC 132			IEC 160		
	LT	Z	ØD	LT	Z	ØD	LT	Z	ØD	LT	Z	ØD
1001	170	66	250	170	66	250	204	100	300	243	139	350
1002	218			218			252			-		
1003	266			266			300			-		
1004	-			-			-			-		

PL	IEC ~ Kg							
	63	71	80	90	100	112	132	160
1001	19	19	21	21	22	22	26	36
1002	25	25	27	27	28	28	34	-
1003	31	31	33	33	34	34	40	-
1004	37	37	39	39	-	-	-	-

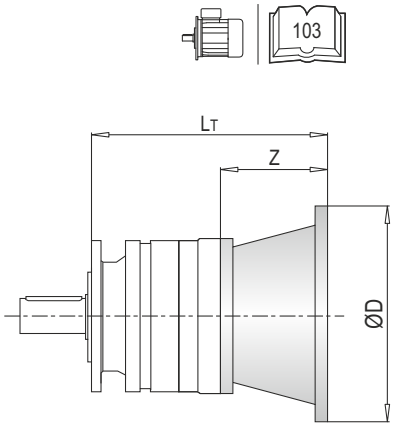

PL 1000 MC - Giriş Milleri / Input Shafts / Antriebswellen / Alberi Entrata / Arbres D'entree / Ejes De Entrada

PL	EL C 28				EL C 42				EML 42				EML 1"3/8 Z6			
	LT	Z	L	Ød	LT	Z	L	Ød	LT	Z	L	Ød	LT	Z	L	Ød
1001	168	64	50	28	168	64	82	42	198	94	82	42	198	94	106	1"3/8
1002	216				216				246				246			
1003	264				264				294				294			
1004	312				312				342				342			

PL	~ Kg			
	EL C 28	EL C 42	EML 42	EML 1"3/8 Z6
1001	19.5	20.0	23.0	23.0
1002	25.5	26.0	29.0	29.0
1003	31.5	32.0	35.0	35.0
1004	37.5	38.0	41.0	41.0

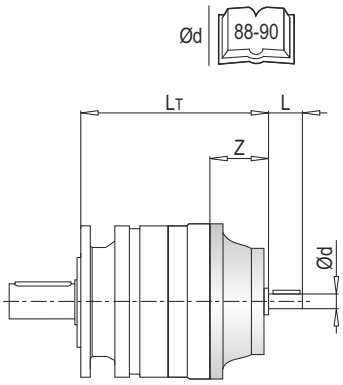

PL 1000 MC - Sonsuz Dişlili Redüktör Adaptörleri (PMRV/PRV) / Worm Gearbox Adaptors (PMRV/PRV) / Anschluss Für Schneckengetriebe (PMRV/PRV) / Predisposizioni Per Riduttori A Vite Senza Fine (PMRV/PRV) / Adaptation Pour Reducteurs A Vis Sans Fin (PMRV/PRV) / Acoplamiento Para Reductores De Tornillo Sin Fin (PMRV/PRV)

PL	PMRV/PRV 050					PMRV/PRV 063				
	LM	l	h	MA	G	LM	l	h	MA	G
1001	229.5	50	110	60	80	239	63	135	72	95
1002	277.5					287				
1003	325.5					335				
1004	373.5					383				

PL	PMRV/PRV 075					PMRV/PRV 090				
	LM	l	h	MA	G	LM	l	h	MA	G
1001	218	75	161	86	112.5	228	90	193	103	129.5
1002	266					276				
1004	314					324				
1004	362					372				

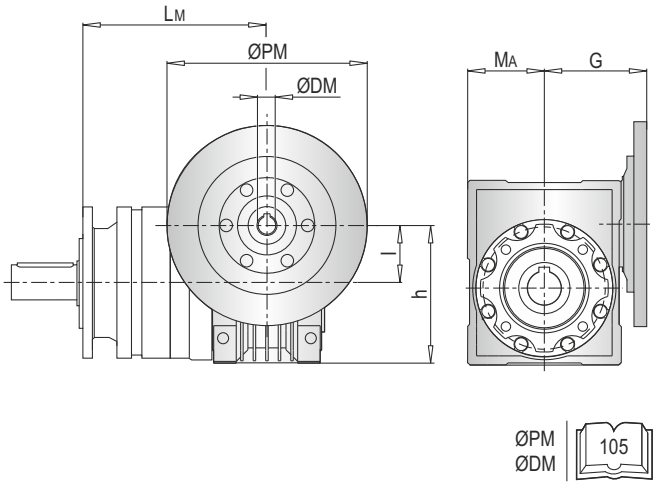

PL	PMRV/PRV ~ Kg			
	050	063	075	090
1001	22	25.5	28	33
1002	28	31.5	34	39
1004	34	37.5	40	45
1004	40	43.5	46	51

PLB 1000 MC - Elektrik Motor Adaptörleri (IEC) / Electric Motor Couplings (IEC) / Anbauvorrichtung Für Elektromotore (IEC) / Predisposizioni Per Motori Elettrici (IEC) / Adaptations Pour Moteurs Electriques (IEC) / Acoplamientos Para Motores Eléctricos (IEC)

PLB	IEC 80				IEC 90				IEC 100				IEC 112			
	A	LT	Z	ØD	A	LT	Z	ØD	A	LT	Z	ØD	A	LT	Z	ØD
1002	179	216	56	200	179	216	56	200	179	226	66	250	179	226	66	250
1003	227				227				227				227			
1004	275				275				-				-			

PLB	IEC 132			
	A	LT	Z	ØD
1002	179	260	100	300
1003	227			
1004	-			

PLB	IEC ~ Kg				
	80	90	100	112	132
1002	36	36	37	37	41
1003	42	42	43	43	47
1004	48	48	-	-	-

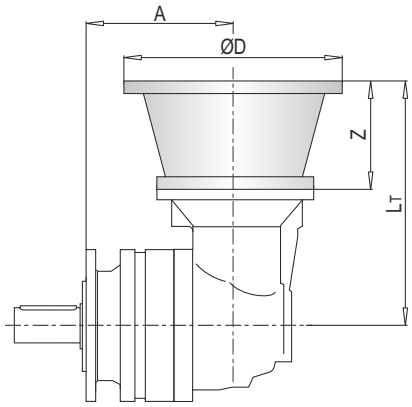

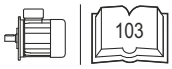

PLB 1000 MC - Giriş Milleri / Input Shafts / Antriebswellen / Alberi Entrata / Arbres D'entree / Ejes De Entrada

PLB	EL C 28					EL C 42					EML 42					EML 1"3/8 Z6				
	A	LT	Z	L	Ød	A	LT	Z	L	Ød	A	LT	Z	L	Ød	A	LT	Z	L	Ød
1002	179	224	64	50	28	179	224	64	82	42	179	254	94	82	42	179	254	94	106	1"3/8
1003	227					227					227					227				
1004	275					275					275					275				

PLB	~ Kg			
	EL C 28	EL C 42	EML 42	EML 1"3/8 Z6
1002	34.5	35.0	38.0	38.0
1003	40.5	41.0	44.0	44.0
1004	46.5	47.0	50.0	50.0

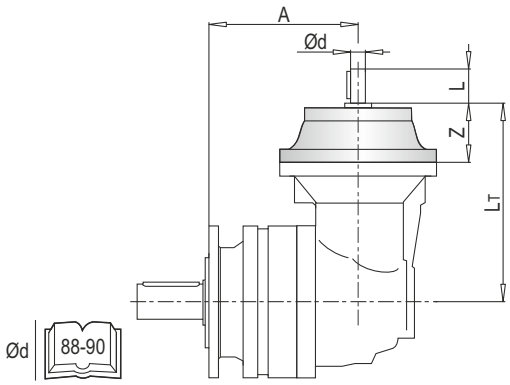

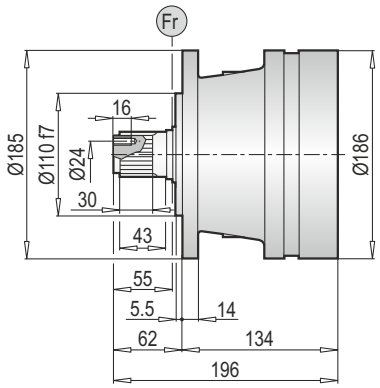

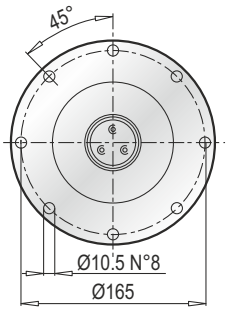

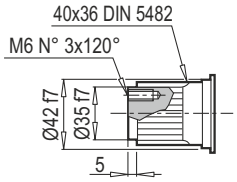

Aksesuarlar
Accessories
Zubehör
Accessori
Accessoires
Accesorios

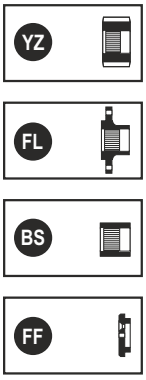

PL 1000 PS - Elektrik Motor Adaptörleri (IEC) / Electrıc Motor Couplings (IEC) / Anbauvorrichtung Für Elektromotore (IEC) / Predisposizioni Per Motori Elettrici (IEC) / Adaptations Pour Moteurs Electriques (IEC) / Acoplamientos Para Motores Eléctricos (IEC)

PL	IEC 63			IEC 71			IEC 80			IEC 90		
	LT	Z	ØD	LT	Z	ØD	LT	Z	ØD	LT	Z	ØD
1001	170	36	140	170	36	160	190	56	200	190	56	200
1002	218			218			238			238		
1003	266			266			286			286		
1004	314			314			334			334		

PL	IEC 100			IEC 112			IEC 132			IEC 160		
	LT	Z	ØD	LT	Z	ØD	LT	Z	ØD	LT	Z	ØD
1001	200	66	250	200	66	250	234	100	300	273	139	350
1002	248			248			282			-		
1003	296			296			330			-		
1004	-			-			-			-		

PL	IEC ~ Kg							
	63	71	80	90	100	112	132	160
1001	21	21	23	23	24	24	28	38
1002	27	27	29	29	30	30	34	-
1003	33	33	35	35	36	36	40	-
1004	39	39	41	41	-	-	-	-

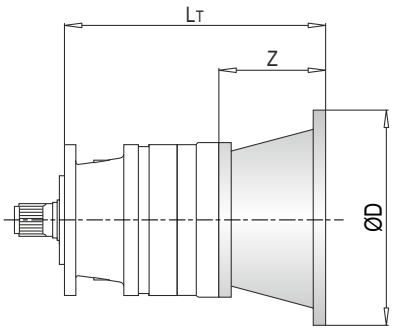

PL 1000 PS - Giriş Milleri / Input Shafts / Antriebswellen / Alberi Entrata / Arbres D'entree / Ejes De Entrada

PL	EL C 28				EL C 42				EML 42				EML 1"3/8 Z6			
	LT	Z	L	Ød	LT	Z	L	Ød	LT	Z	L	Ød	LT	Z	L	Ød
1001	198	64	50	28	198	64	82	42	228	94	82	42	228	94	106	1"3/8
1002	246				246				276				276			
1003	294				294				324				324			
1004	342				342				372				372			

PL	~ Kg			
	EL C 28	EL C 42	EML 42	EML 1"3/8 Z6
1001	19.5	20.0	23.0	23.0
1002	25.5	26.0	29.0	29.0
1003	31.5	32.0	35.0	35.0
1004	37.5	38.0	41.0	41.0

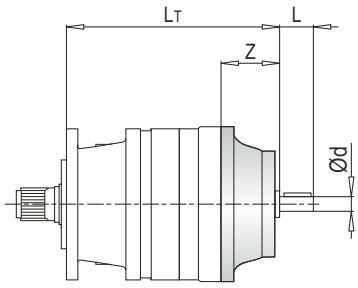

PL 1000 PS - Sonsuz Dişlili Redüktör Adaptörleri (PMRV/PRV) / Worm Gearbox Adaptors (PMRV/PRV) / Anschluss Für Schneckengetriebe (PMRV/PRV) / Predisposizioni Per Riduttori A Vite Senza Fine (PMRV/PRV) / Adaptation Pour Reducteurs A Vis Sans Fin (PMRV/PRV) / Acoplamiento Para Reductores De Tornillo Sin Fin (PMRV/PRV)

PL	PMRV/PRV 050					PMRV/PRV 063				
	LM	l	h	MA	G	LM	l	h	MA	G
1001	259.5	50	110	60	80	269	63	135	72	95
1002	307.5					317				
1003	355.5					365				
1004	403.5					413				

PL	PMRV/PRV 075					PMRV/PRV 090				
	LM	l	h	MA	G	LM	l	h	MA	G
1001	248	75	161	86	112.5	258	90	193	103	129.5
1002	296					306				
1004	344					354				
1004	392					402				

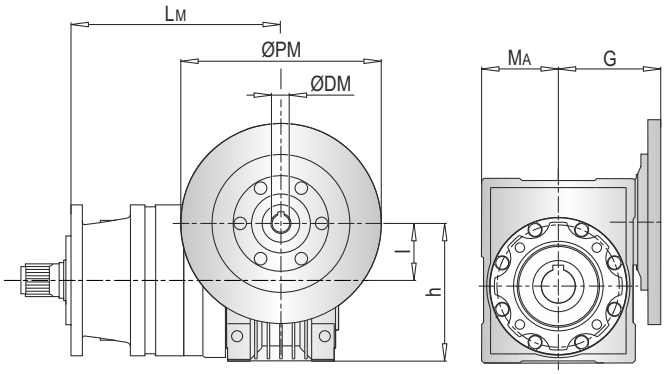

ØPM
ØDM
105

PL	PMRV/PRV ~ Kg			
	050	063	075	090
1001	24	27.5	30	35
1002	30	33.5	36	41
1004	36	39.5	42	47
1004	42	45.5	48	53

PLB 1000 PS - Elektrik Motor Adaptörleri (IEC) / Electric Motor Couplings (IEC) / Anbauvorrichtung Für Elektromotore (IEC) / Predisposizioni Per Motori Elettrici (IEC) / Adaptations Pour Moteurs Electriques (IEC) / Acoplamientos Para Motores Eléctricos (IEC)

PLB	IEC 80				IEC 90				IEC 100				IEC 112			
	A	LT	Z	ØD	A	LT	Z	ØD	A	LT	Z	ØD	A	LT	Z	ØD
1002	209	216	56	200	209	216	56	200	209	226	66	250	209	226	66	250
1003	257				257				257				257			
1004	305				305				-				-			

PLB	IEC 132			
	A	LT	Z	ØD
1002	209	260	100	300
1003	257			
1004	-			

PLB	IEC ~ Kg				
	80	90	100	112	132
1002	38	38	39	39	43
1003	44	44	45	45	49
1004	50	50	-	-	-

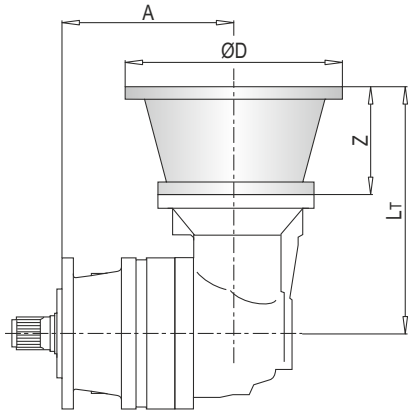

103

PLB 1000 PS - Giriş Milleri / Input Shafts / Antriebswellen / Alberi Entrata / Arbres D'entree / Ejes De Entrada

PLB	EL C 28					EL C 42					EML 42					EML 1"3/8 Z6				
	A	LT	Z	L	Ød	A	LT	Z	L	Ød	A	LT	Z	L	Ød	A	LT	Z	L	Ød
1002	209	224	64	50	28	209	224	64	82	42	209	254	94	82	42	209	254	94	106	1"3/8
1003	257					257					257					257				
1004	305					305					305					305				

PLB	~ Kg			
	EL C 28	EL C 42	EML 42	EML 1"3/8 Z6
1002	34.5	35.0	38.0	38.0
1003	40.5	41.0	44.0	44.0
1004	46.5	47.0	50.0	50.0

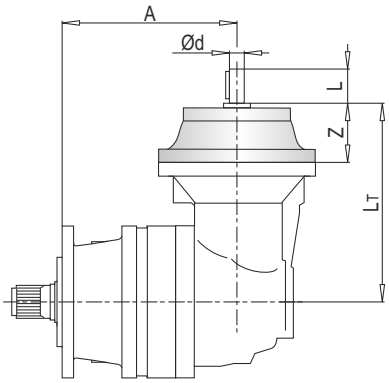

Ød
88-90

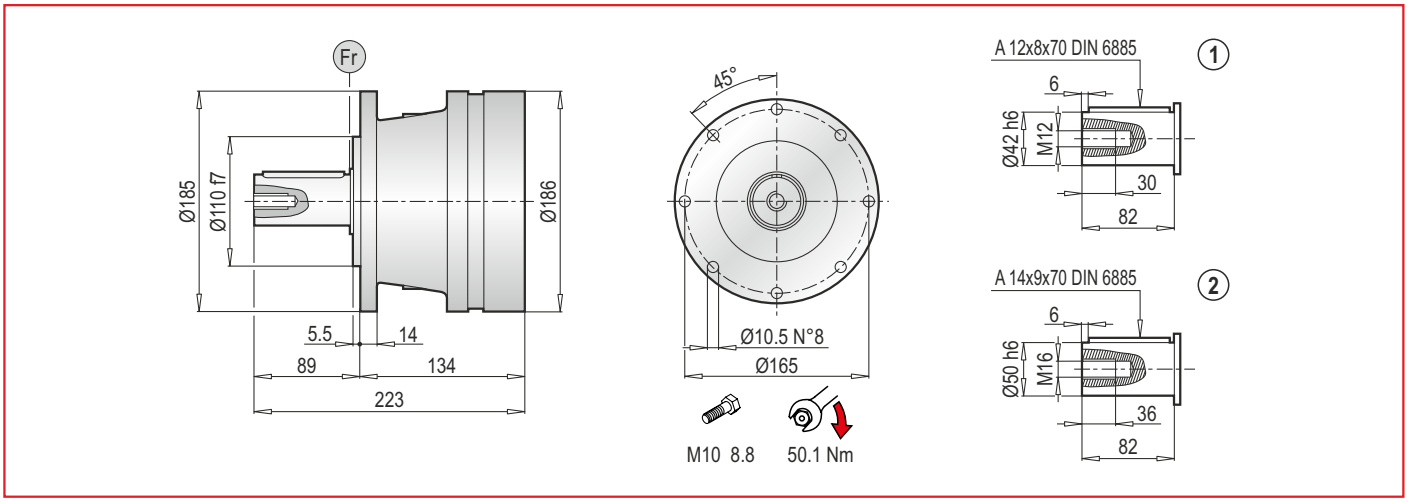

PL 1000 PC - Elektrik Motor Adaptörleri (IEC) / Electrıc Motor Couplings (IEC) / Anbauvorrichtung Für Elektromotore (IEC) / Predisposizioni Per Motori Elettrici (IEC) / Adaptations Pour Moteurs Electriques (IEC) / Acoplamientos Para Motores Eléctricos (IEC)

PL	IEC 63			IEC 71			IEC 80			IEC 90		
	LT	Z	ØD	LT	Z	ØD	LT	Z	ØD	LT	Z	ØD
1001	170	36	140	170	36	160	190	56	200	190	56	200
1002	218			218			238			238		
1003	266			266			286			286		
1004	314			314			334			334		

PL	IEC 100			IEC 112			IEC 132			IEC 160		
	LT	Z	ØD	LT	Z	ØD	LT	Z	ØD	LT	Z	ØD
1001	200	66	250	200	66	250	234	100	300	273	139	350
1002	248			248			282			-		
1003	296			296			330			-		
1004	-			-			-			-		

PL	IEC ~ Kg							
	63	71	80	90	100	112	132	160
1001	21	21	23	23	24	24	28	38
1002	27	27	29	29	30	30	34	-
1003	33	33	35	35	36	36	40	-
1004	39	39	41	41	-	-	-	-

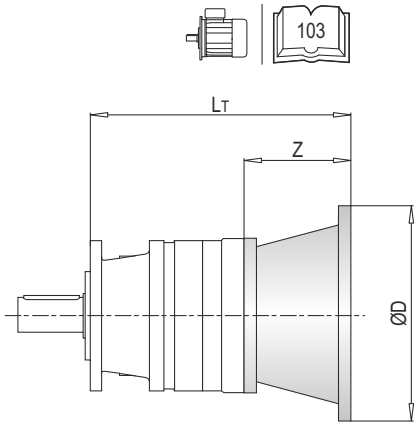

PL 1000 PC - Giriş Milleri / Input Shafts / Antriebswellen / Alberi Entrata / Arbres D'entree / Ejes De Entrada

PL	EL C 28				EL C 42				EML 42				EML 1"3/8 Z6			
	LT	Z	L	Ød	LT	Z	L	Ød	LT	Z	L	Ød	LT	Z	L	Ød
1001	198	64	50	28	198	64	82	42	228	94	82	42	228	94	106	1"3/8
1002	246				246				276				276			
1003	294				294				324				324			
1004	342				342				372				372			

PL	~ Kg			
	EL C 28	EL C 42	EML 42	EML 1"3/8 Z6
1001	19.5	20.0	23.0	23.0
1002	25.5	26.0	29.0	29.0
1003	31.5	32.0	35.0	35.0
1004	37.5	38.0	41.0	41.0

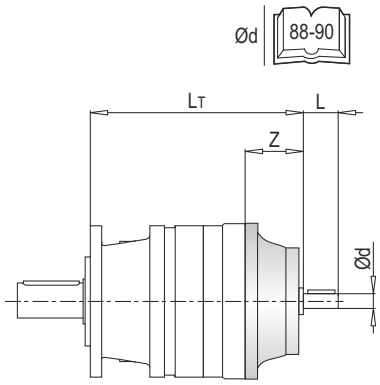

PL 1000 PC - Sonsuz Dişlili Redüktör Adaptörleri (PMRV/PRV) / Worm Gearbox Adaptors (PMRV/PRV) / Anschluss Für Schneckengetriebe (PMRV/PRV) / Predisposizioni Per Riduttori A Vite Senza Fine (PMRV/PRV) / Adaptation Pour Reducteurs A Vis Sans Fin (PMRV/PRV) / Acoplamiento Para Reductores De Tornillo Sin Fin (PMRV/PRV)

PL	PMRV/PRV 050					PMRV/PRV 063				
	LM	l	h	MA	G	LM	l	h	MA	G
1001	259.5	50	110	60	80	269	63	135	72	95
1002	307.5					317				
1003	355.5					365				
1004	403.5					413				

PL	PMRV/PRV 075					PMRV/PRV 090				
	LM	l	h	MA	G	LM	l	h	MA	G
1001	248	75	161	86	112.5	258	90	193	103	129.5
1002	296					306				
1003	344					354				
1004	392					402				

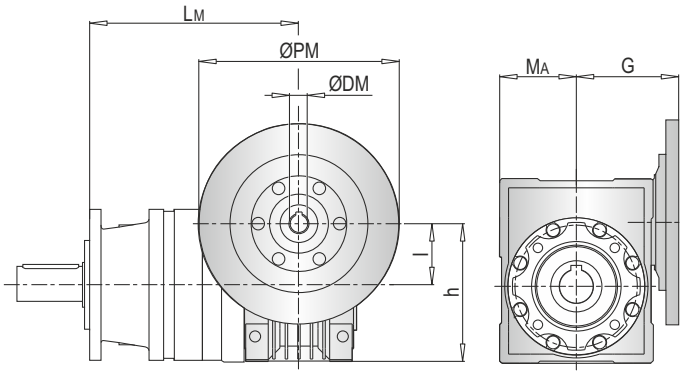

ØPM
ØDM
105

PL	PMRV/PRV ~ Kg			
	050	063	075	090
1001	24	27.5	30	35
1002	30	33.5	36	41
1003	36	39.5	42	47
1004	42	45.5	48	53

PLB 1000 PC - Elektrik Motor Adaptörleri (IEC) / Electric Motor Couplings (IEC) / Anbauvorrichtung Für Elektromotore (IEC) / Predisposizioni Per Motori Elettrici (IEC) / Adaptations Pour Moteurs Electriques (IEC) / Acoplamientos Para Motores Eléctricos (IEC)

PLB	IEC 80				IEC 90				IEC 100				IEC 112			
	A	LT	Z	ØD	A	LT	Z	ØD	A	LT	Z	ØD	A	LT	Z	ØD
1002	209	216	56	200	209	216	56	200	209	226	66	250	209	226	66	250
1003	257				257				257				257			
1004	305				305				-				-			

PLB	IEC 132			
	A	LT	Z	ØD
1002	209	260	100	300
1003	257			
1004	-			

PLB	IEC ~ Kg				
	80	90	100	112	132
1002	38	38	39	39	43
1003	44	44	45	45	49
1004	50	50	-	-	-

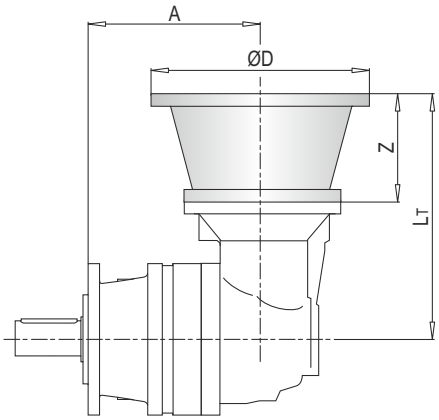

103

PLB 1000 PC - Giriş Milleri / Input Shafts / Antriebswellen / Alberi Entrata / Arbres D'entree / Ejes De Entrada

PLB	EL C 28					EL C 42					EML 42					EML 1"3/8 Z6				
	A	LT	Z	L	Ød	A	LT	Z	L	Ød	A	LT	Z	L	Ød	A	LT	Z	L	Ød
1002	209	224	64	50	28	209	224	64	82	42	209	254	94	82	42	209	254	94	106	1"3/8
1003	257					257					257					257				
1004	305					305					305					305				

PLB	~ Kg			
	EL C 28	EL C 42	EML 42	EML 1"3/8 Z6
1002	34.5	35.0	38.0	38.0
1003	40.5	41.0	44.0	44.0
1004	46.5	47.0	50.0	50.0

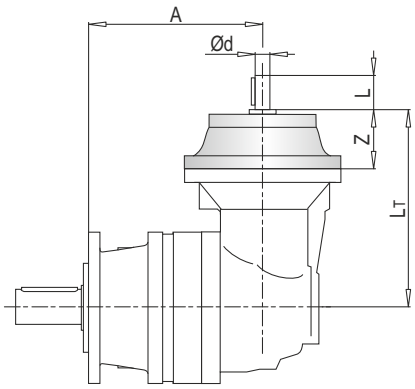

Ød
88-90

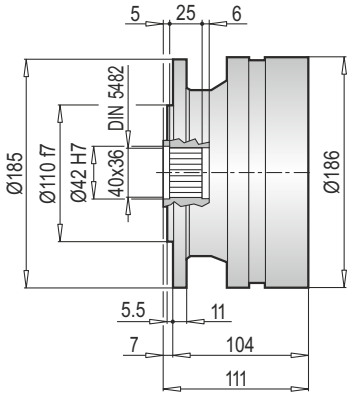

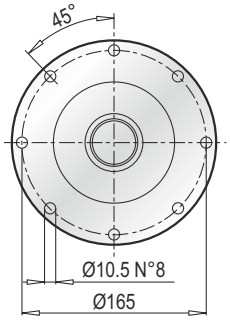

M10 8.8 50.1 Nm

Aksesuarlar
Accessories
Zubehör
Accessori
Accessoires
Accesorios

PL 1000 F - Elektrik Motor Adaptörleri (IEC) / Electrıc Motor Couplings (IEC) / Anbauvorrichtung Für Elektromotore (IEC) / Predisposizioni Per Motori Elettrici (IEC) / Adaptations Pour Moteurs Electriques (IEC) / Acoplamientos Para Motores Eléctricos (IEC)

PL	IEC 63			IEC 71			IEC 80			IEC 90		
	LT	Z	ØD	LT	Z	ØD	LT	Z	ØD	LT	Z	ØD
1001	140	36	140	140	36	160	160	56	200	160	56	200
1002	188			188			208			208		
1003	236			236			256			256		
1004	284			284			304			304		

PL	IEC 100			IEC 112			IEC 132			IEC 160		
	LT	Z	ØD	LT	Z	ØD	LT	Z	ØD	LT	Z	ØD
1001	170	66	250	170	66	250	204	100	300	243	139	350
1002	218			218			252			-		
1003	266			266			300			-		
1004	-			-			-			-		

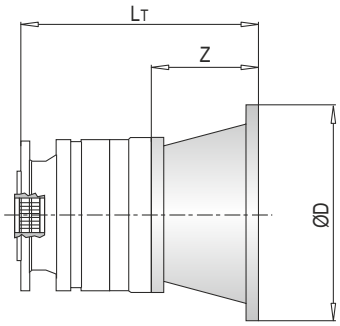

PL	IEC ~ Kg							
	63	71	80	90	100	112	132	160
1001	17	17	19	19	20	20	24	34
1002	23	23	25	25	26	26	30	-
1003	29	29	31	31	32	32	36	-
1004	35	35	37	37	-	-	-	-

PL 1000 F - Giriş Milleri / Input Shafts / Antriebswellen / Alberi Entrata / Arbres D'entree / Ejes De Entrada

PL	EL C 28				EL C 42				EML 42				EML 1"3/8 Z6			
	LT	Z	L	Ød	LT	Z	L	Ød	LT	Z	L	Ød	LT	Z	L	Ød
1001	168	64	50	28	168	64	82	42	198	94	82	42	198	94	106	1"3/8
1002	216				216				246				246			
1003	264				264				294				294			
1004	312				312				342				342			

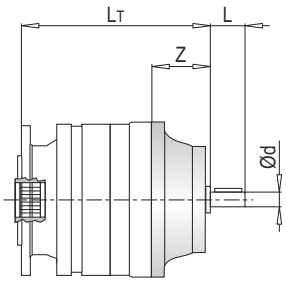

PL	~ Kg			
	EL C 28	EL C 42	EML 42	EML 1"3/8 Z6
1001	17.5	18.0	21.0	21.0
1002	23.5	24.0	27.0	27.0
1003	29.5	30.0	33.0	33.0
1004	35.5	36.0	39.0	39.0

PL 1000 F - Sonsuz Dişlili Redüktör Adaptörleri (PMRV/PRV) / Worm Gearbox Adaptors (PMRV/PRV) / Anschluss Für Schneckengetriebe (PMRV/PRV) / Predisposizioni Per Riduttori A Vite Senza Fine (PMRV/PRV) / Adaptation Pour Reducteurs A Vis Sans Fin (PMRV/PRV) / Acoplamiento Para Reductores De Tornillo Sin Fin (PMRV/PRV)

PL	PMRV/PRV 050					PMRV/PRV 063				
	LM	l	h	MA	G	LM	l	h	MA	G
1001	229.5	50	110	60	80	239	63	135	72	95
1002	277.5					287				
1003	325.5					335				
1004	373.5					383				

PL	PMRV/PRV 075					PMRV/PRV 090				
	LM	l	h	MA	G	LM	l	h	MA	G
1001	218	75	161	86	112.5	228	90	193	103	129.5
1002	266					276				
1003	314					324				
1004	362					372				

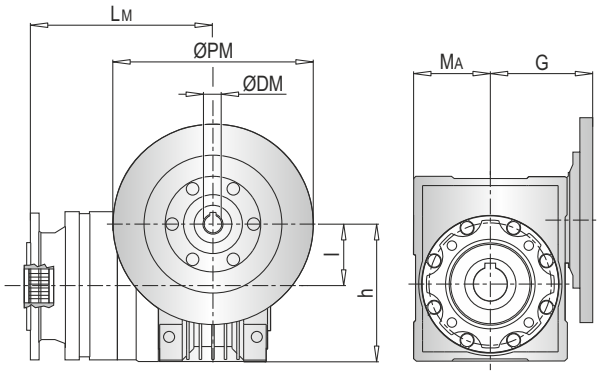

ØPM
ØDM
105

PL	PMRV/PRV ~ Kg			
	050	063	075	090
1001	20	23.5	26	31
1002	26	29.5	32	37
1004	32	35.5	38	43
1004	38	41.5	44	49

PLB 1000 F - Elektrik Motor Adaptörleri (IEC) / Electric Motor Couplings (IEC) / Anbauvorrichtung Für Elektromotore (IEC) / Predisposizioni Per Motori Elettrici (IEC) / Adaptations Pour Moteurs Electriques (IEC) / Acoplamientos Para Motores Eléctricos (IEC)

PLB	IEC 80				IEC 90				IEC 100				IEC 112			
	A	LT	Z	ØD	A	LT	Z	ØD	A	LT	Z	ØD	A	LT	Z	ØD
1002	179	216	56	200	179	216	56	200	179	226	66	250	179	226	66	250
1003	227				227				227				227			
1004	275				275											

PLB	IEC 132			
	A	LT	Z	ØD
1002	179	260	100	300
1003	227			
1004	-			

PLB	IEC ~ Kg				
	80	90	100	112	132
1002	34	34	35	35	39
1003	40	40	41	41	45
1004	46	46	-	-	-

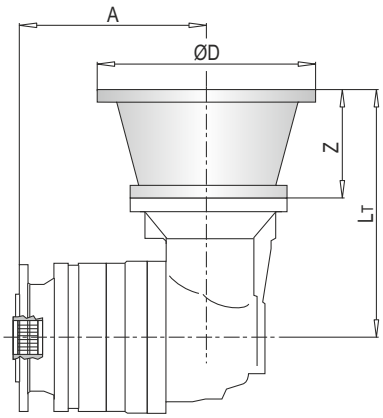

103

PLB 1000 F - Giriş Milleri / Input Shafts / Antriebswellen / Alberi Entrata / Arbres D'entree / Ejes De Entrada

PLB	EL C 28					EL C 42					EML 42					EML 1"3/8 Z6				
	A	LT	Z	L	Ød	A	LT	Z	L	Ød	A	LT	Z	L	Ød	A	LT	Z	L	Ød
1002	179	224	64	50	28	179	224	64	82	42	179	254	94	82	42	179	254	94	106	1"3/8
1003	227					227					227					227				
1004	275					275					275					275				

PLB	~ Kg			
	EL C 28	EL C 42	EML 42	EML 1"3/8 Z6
1002	32.5	33.0	36.0	36.0
1003	40.5	41.0	44.0	44.0
1004	46.5	47.0	50.0	50.0

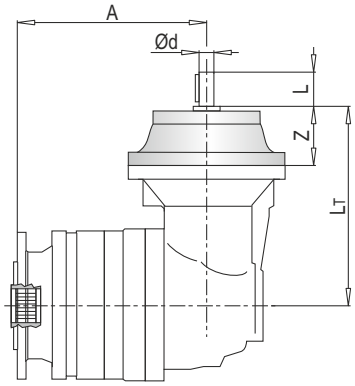

Ød
88-90

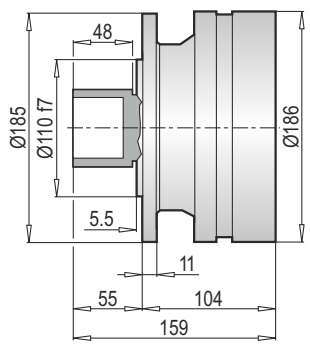

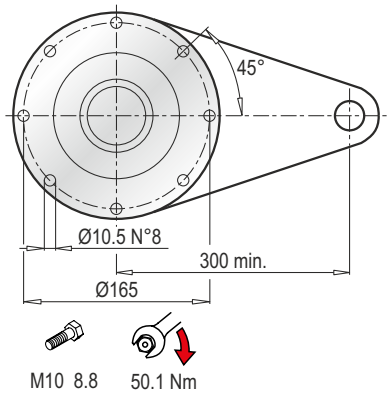

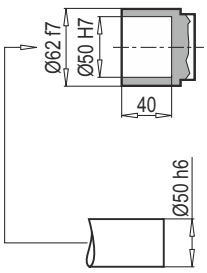

Aksesuarlar
Accessories
Zubehör
Accessori
Accessoires
Accesorios

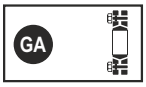

PL 1000 FS - Elektrik Motor Adaptörleri (IEC) / Electrıc Motor Couplings (IEC) / Anbauvorrichtung Für Elektromotore (IEC) / Predisposizioni Per Motori Elettrici (IEC) / Adaptations Pour Moteurs Electriques (IEC) / Acoplamientos Para Motores Eléctricos (IEC)

PL	IEC 63			IEC 71			IEC 80			IEC 90		
	LT	Z	ØD	LT	Z	ØD	LT	Z	ØD	LT	Z	ØD
1001	140	36	140	140	36	160	160	56	200	160	56	200
1002	188			188			208			208		
1003	236			236			256			256		
1004	284			284			304			304		

PL	IEC 100			IEC 112			IEC 132			IEC 160		
	LT	Z	ØD	LT	Z	ØD	LT	Z	ØD	LT	Z	ØD
1001	170	66	250	170	66	250	204	100	300	243	139	350
1002	218			218			252			-		
1003	266			266			300			-		
1004	-			-			-			-		

PL	IEC ~ Kg							
	63	71	80	90	100	112	132	160
1001	20	20	22	22	23	23	27	37
1002	26	26	28	28	29	29	33	-
1003	32	32	34	34	35	35	39	-
1004	38	38	40	40	-	-	-	-

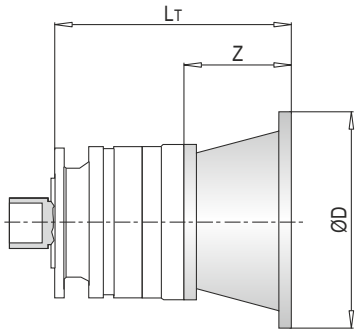

PL 1000 FS - Giriş Milleri / Input Shafts / Antriebswellen / Alberi Entrata / Arbres D'entree / Ejes De Entrada

PL	EL C 28				EL C 42				EML 42				EML 1"3/8 Z6			
	LT	Z	L	Ød	LT	Z	L	Ød	LT	Z	L	Ød	LT	Z	L	Ød
1001	168	64	50	28	168	64	82	42	198	94	82	42	198	94	106	1"3/8
1002	216				216				246				246			
1003	264				264				294				294			
1004	312				312				342				342			

PL	~ Kg			
	EL C 28	EL C 42	EML 42	EML 1"3/8 Z6
1001	20.5	21.0	24.0	24.0
1002	26.5	27.0	30.0	30.0
1003	32.5	33.0	36.0	36.0
1004	38.5	39.0	42.0	42.0

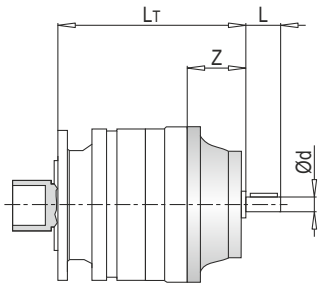

PL 1000 FS - Sonsuz Dişlili Redüktör Adaptörleri (PMRV/PRV) / Worm Gearbox Adaptors (PMRV/PRV) / Anschluss Für Schneckengetriebe (PMRV/PRV) / Predisposizioni Per Riduttori A Vite Senza Fine (PMRV/PRV) / Adaptation Pour Reducteurs A Vis Sans Fin (PMRV/PRV) / Acoplamiento Para Reductores De Tornillo Sin Fin (PMRV/PRV)

PL	PMRV/PRV 050					PMRV/PRV 063				
	LM	l	h	MA	G	LM	l	h	MA	G
1001	229.5	50	110	60	80	239	63	135	72	95
1002	277.5					287				
1003	325.5					335				
1004	373.5					383				

PL	PMRV/PRV 075					PMRV/PRV 090				
	LM	l	h	MA	G	LM	l	h	MA	G
1001	218	75	161	86	112.5	228	90	193	103	129.5
1002	266					276				
1003	314					324				
1004	362					372				

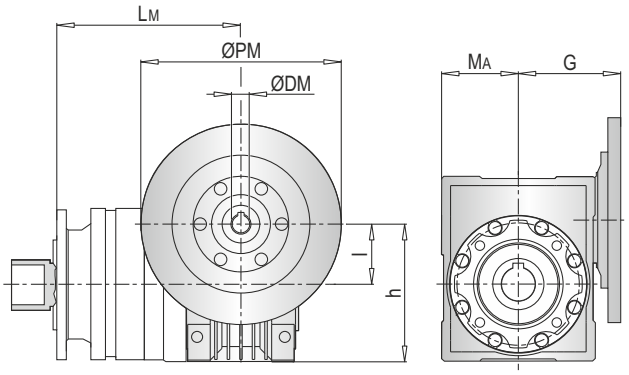

ØPM
ØDM
105

PL	PMRV/PRV ~ Kg			
	050	063	075	090
1001	23	26.5	29	34
1002	29	32.5	35	40
1004	35	38.5	41	46
1004	41	44.5	47	52

PLB 1000 FS - Elektrik Motor Adaptöleri (IEC) / Electric Motor Couplings (IEC) /Anbauvorrichtung Für Elektromotore (IEC) / Predisposizioni Per Motori Elettrici (IEC) / Adaptations Pour Moteurs Electriques (IEC) /Acoplamientos Para Motores Eléctricos (IEC)

PLB	IEC 80				IEC 90				IEC 100				IEC 112			
	A	LT	Z	ØD	A	LT	Z	ØD	A	LT	Z	ØD	A	LT	Z	ØD
1002	179	216	56	200	179	216	56	200	179	226	66	250	179	226	66	250
1003	227				227				227				227			
1004	275				275				-				-			

PLB	IEC 132			
	A	LT	Z	ØD
1002	179	260	100	300
1003	227			
1004	-			

PLB	IEC ~ Kg				
	80	90	100	112	132
1002	37	37	38	38	42
1003	43	43	44	44	48
1004	49	49	-	-	-

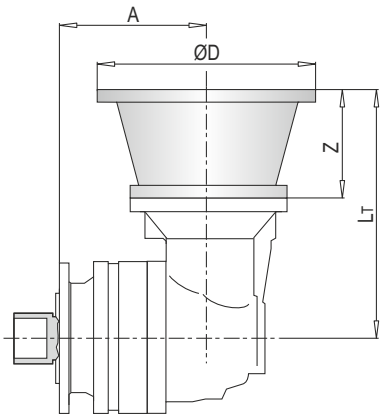

103

PLB 1000 FS - Giriş Milleri / Input Shafts / Antriebswellen / Alberi Entrata / Arbres D'entree / Ejes De Entrada

PLB	EL C 28					EL C 42					EML 42					EML 1"3/8 Z6				
	A	LT	Z	L	Ød	A	LT	Z	L	Ød	A	LT	Z	L	Ød	A	LT	Z	L	Ød
1002	179	224	64	50	28	179	224	64	82	42	179	254	94	82	42	179	254	94	106	1"3/8
1003	227					227					227					227				
1004	275					275					275					275				

PLB	~ Kg			
	EL C 28	EL C 42	EML 42	EML 1"3/8 Z6
1002	32.5	33.0	36.0	36.0
1003	38.5	39.0	42.0	42.0
1004	44.5	45.0	48.0	48.0

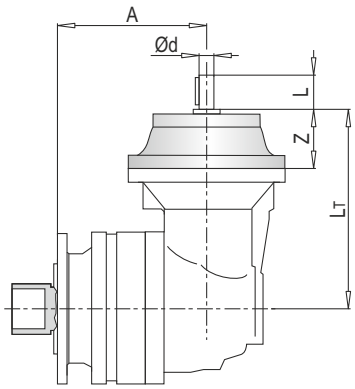

Ød
88-90

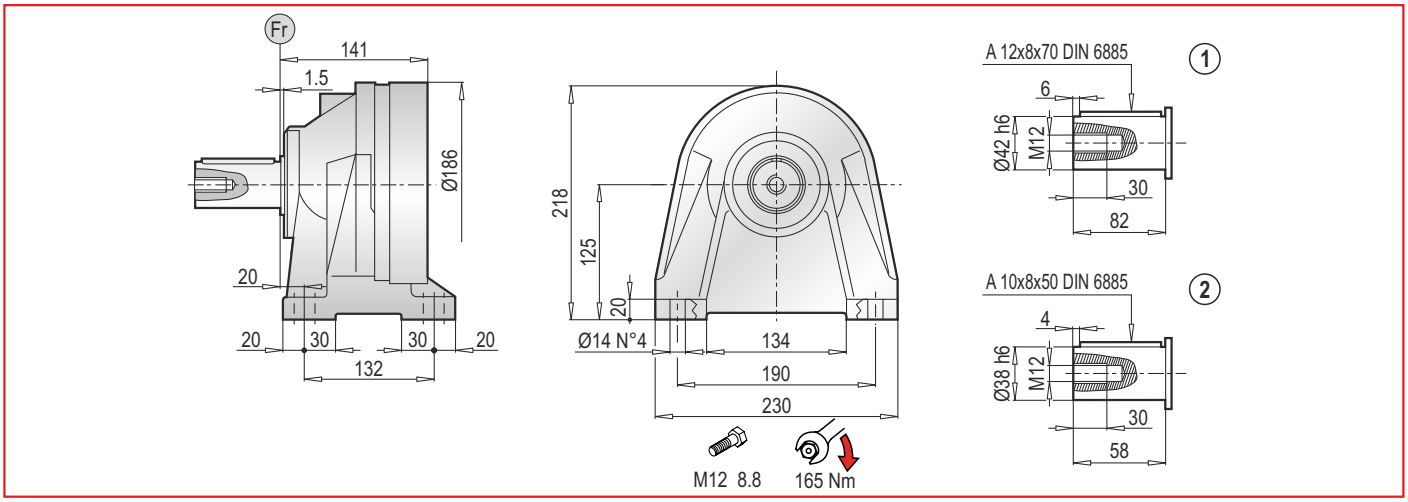

PL 1000 CPC - Elektrik Motor Adaptörleri (IEC) / Electrıc Motor Couplings (IEC) / Anbauvorrichtung Für Elektromotore (IEC) / Predisposizioni Per Motori Elettrici (IEC) / Adaptations Pour Moteurs Electriques (IEC) / Acoplamientos Para Motores Eléctricos (IEC)

PL	IEC 63			IEC 71			IEC 80			IEC 90		
	LT	Z	ØD	LT	Z	ØD	LT	Z	ØD	LT	Z	ØD
1001	177	36	140	177	36	160	197	56	200	197	56	200
1002	225			225			245			245		
1003	273			273			293			293		
1004	321			321			341			341		

PL	IEC 100			IEC 112			IEC 132			IEC 160		
	LT	Z	ØD	LT	Z	ØD	LT	Z	ØD	LT	Z	ØD
1001	207	66	250	207	66	250	241	100	300	280	139	350
1002	255			255			289			-		
1003	303			303			337			-		
1004	-			-			-			-		

PL	IEC ~ Kg							
	63	71	80	90	100	112	132	160
1001	24	24	26	26	27	27	31	41
1002	30	30	32	32	33	33	37	-
1003	36	36	38	38	39	39	43	-
1004	42	42	44	44	-	-	-	-

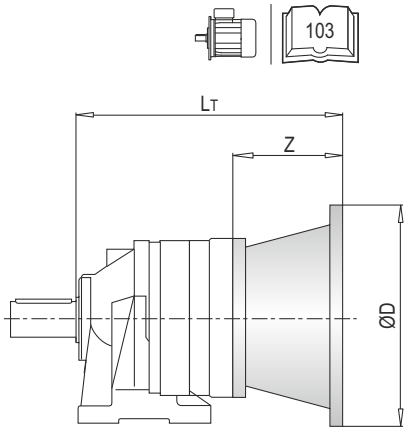

PL 1000 CPC - Giriş Milleri / Input Shafts / Antriebswellen / Alberi Entrata / Arbres D'entree / Ejes De Entrada

PL	EL C 28				EL C 42				EML 42				EML 1"3/8 Z6			
	LT	Z	L	Ød	LT	Z	L	Ød	LT	Z	L	Ød	LT	Z	L	Ød
1001	205	64	50	28	205	64	82	42	235	94	82	42	235	94	106	1"3/8
1002	253				253				283				283			
1003	301				301				331				331			
1004	349				349				379				379			

PL	~ Kg			
	EL C 28	EL C 42	EML 42	EML 1"3/8 Z6
1001	24.5	25.0	28.0	28.0
1002	30.5	31.0	34.0	34.0
1003	36.5	37.0	40.0	40.0
1004	42.5	43.0	46.0	46.0

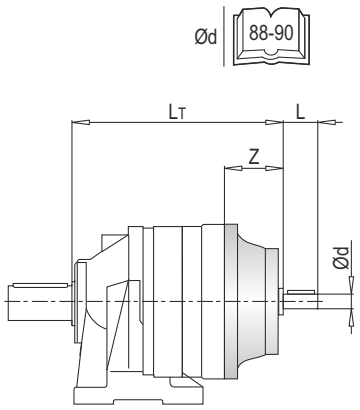

PL 1000 CPC - Sonsuz Dişlili Redüktör Adaptörleri (PMRV/PRV) / Worm Gearbox Adaptors (PMRV/PRV) / Anschluss Für Schneckengetriebe (PMRV/PRV) / Predisposizioni Per Riduttori A Vite Senza Fine (PMRV/PRV) / Adaptation Pour Reducteurs A Vis Sans Fin (PMRV/PRV) / Acoplamiento Para Reductores De Tornillo Sin Fin (PMRV/PRV)

PL	PMRV/PRV 050					PMRV/PRV 063				
	LM	I	h	MA	G	LM	I	h	MA	G
1001	226.5	50	110	60	80	276	63	135	72	95
1002	314.5					324				
1003	362.5					472				
1004	410.5					420				

PL	PMRV/PRV 075					PMRV/PRV 090				
	LM	I	h	MA	G	LM	I	h	MA	G
1001	255	75	161	86	112.5	265	90	193	103	129.5
1002	303					313				
1003	351					361				
1004	399					409				

PL	PMRV/PRV ~ Kg			
	050	063	075	090
1001	27	30.5	33	38
1002	33	36.5	39	44
1004	39	42.5	45	50
1004	45	48.5	51	56

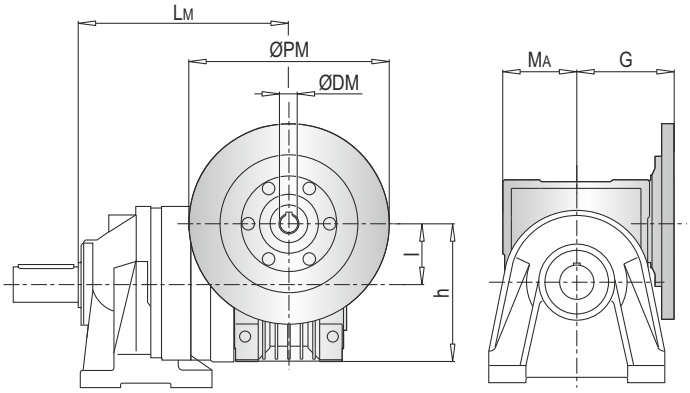

ØPM
ØDM
105

PLB 1000 CPC - Elektrik Motor Adaptörleri (IEC) / Electric Motor Couplings (IEC) / Anbauvorrichtung Für Elektromotore (IEC) / Predisposizioni Per Motori Elettrici (IEC) / Adaptations Pour Moteurs Electriques (IEC) / Acoplamientos Para Motores Eléctricos (IEC)

PLB	IEC 80				IEC 90				IEC 100				IEC 112			
	A	LT	Z	ØD	A	LT	Z	ØD	A	LT	Z	ØD	A	LT	Z	ØD
1002	216	216	56	200	216	216	56	200	216	226	66	250	216	226	66	250
1003	264				264				264				264			
1004	312				312				-				-			

PLB	IEC 132			
	A	LT	Z	ØD
1002	216	260	100	300
1003	264			
1004	-			

PLB	IEC ~ Kg				
	80	90	100	112	132
1002	41	41	42	42	46
1003	47	47	48	48	52
1004	53	53	-	-	-

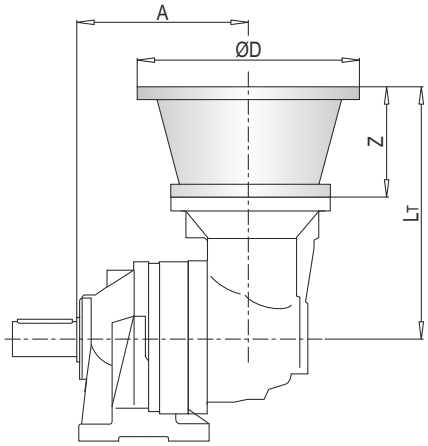

103

PLB 1000 CPC - Giriş Milleri / Input Shafts / Antriebswellen / Alberi Entrata / Arbres D'entree / Ejes De Entrada

PLB	EL C 28					EL C 42					EML 42					EML 1"3/8 Z6				
	A	LT	Z	L	Ød	A	LT	Z	L	Ød	A	LT	Z	L	Ød	A	LT	Z	L	Ød
1002	216	224	64	50	28	216	224	64	82	42	216	254	94	82	42	216	254	94	106	1"3/8
1003	264					264					264					264				
1004	312					312					312					312				

PLB	~ Kg			
	EL C 28	EL C 42	EML 42	EML 1"3/8 Z6
1002	39.5	40.0	43.0	43.0
1003	45.5	46.0	49.0	49.0
1004	51.5	52.0	55.0	55.0

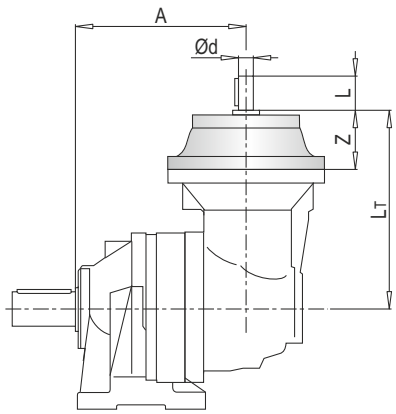

Ød
88-90

PL	~ Kg MS
1001	14
1002	20
1003	26
1004	32

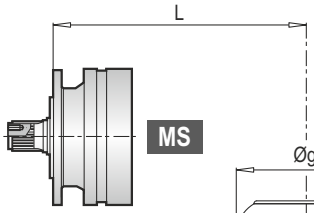

PL	~ Kg MC
1001	14
1002	20
1003	26
1004	32

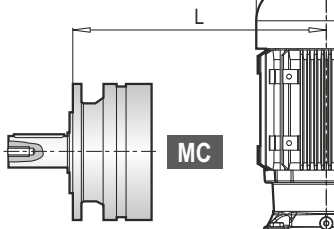

PL	~ Kg PS
1001	16
1002	22
1003	28
1004	34

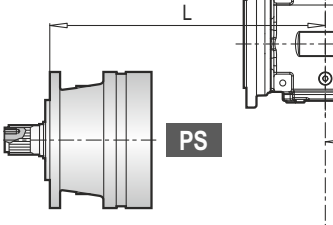

PL	~ Kg PC
1001	16
1002	22
1003	28
1004	34

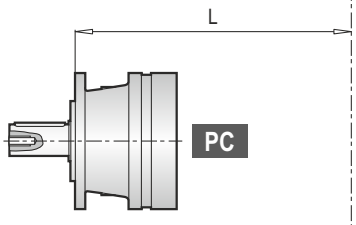

PL	~ Kg F
1001	12
1002	18
1003	24
1004	30

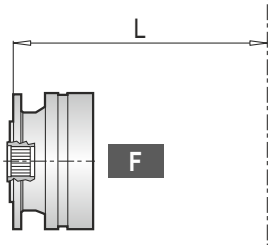

PL	~ Kg FS
1001	15
1002	21
1003	27
1004	33

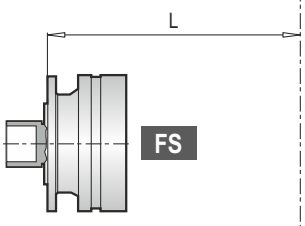

PL	~ Kg CPC
1001	19
1002	25
1003	31
1004	37

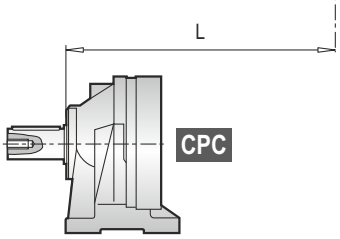

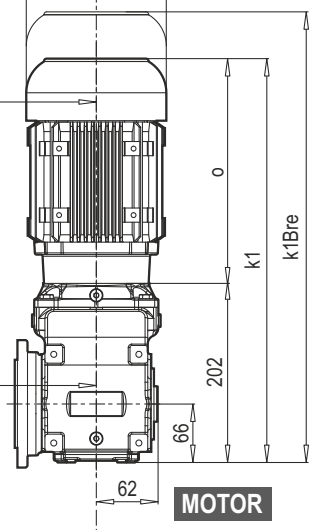

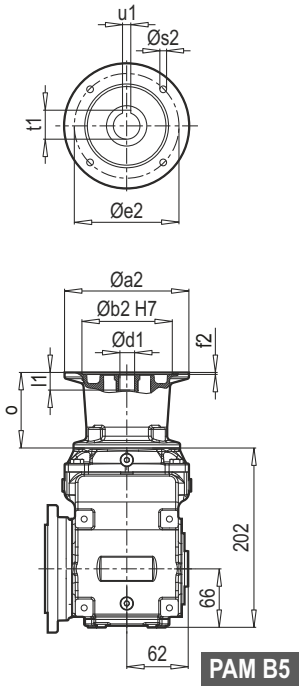

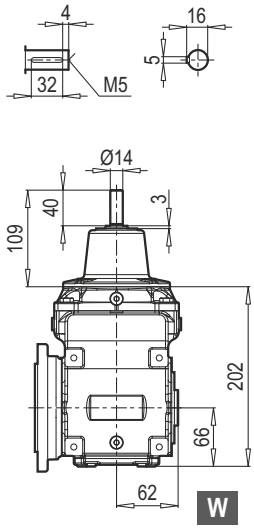

W ~ Kg	
PKD B 0290	11

PL	L						
	MS	MC	PS	PC	F	FS	CPC
1001	246	246	276	276	246	246	283
1002	294	294	324	324	294	294	331
1003	342	342	372	372	342	342	379
1004	390	390	420	420	390	390	427

	MOTOR	g	g1	k1	k1Bre	o
PKD B 0290	63 M	124	111	400	452	198
	71 M	140	119	429	489	227
	80 M	159	127	456	518	254
	90 S	193	151	482	555	280
	90 L	193	151	502	575	300

~ Kg	
MOTOR	PKD B 0290
63 M	14
71 M	20
80 M	21
90 S	24
90 L	26

	PAM B5	Øa2	Øb2	Øe2	f2	Øs2	Ød1	l1	t1	u1	o
PKD B 0290	63	140	95	115	3.5	M8	11	23	12.8	4	85
	71	160	110	130	4.0	M8	14	30	16.3	5	85
	80	200	130	165	4.0	M10	19	40	21.8	6	103
	90	200	130	165	4.0	M10	24	50	27.3	8	103

~ Kg	
PAM B5	PKD B 0290
63	12
71	13
80	15
90	15

AKSESUARLAR / ACCESSORIES / ZUBEHÖR / ACCESSORI / ACCESSOIRES / ACCESORIOS

YZ
Pinyon / Pinion / Ritzel
Pignoni / Pignon / Piñones

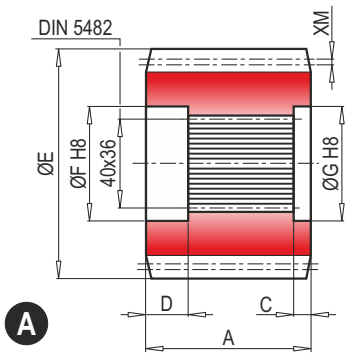

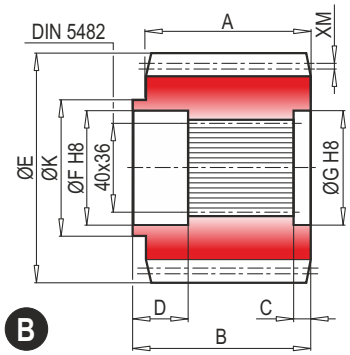

	Çıkış tipi Output type Abtriebs-version Versione Version Versión	M	Z	XM	A	B	C	D	E	F	G	K	Malzeme Material Material Materiale Matière Material	Kod Code Bestell-Nr. Codice Code Código
A	M..-P..	1.9	20	0.049	65	-	6	20.5	84.5	42	42	-	38NiCrMo4	1071.200.042
A	M..-P..	5	16	2.5	55	-	6	20.5	95	42	42	-	38NiCrMo4	1071.259.042
B	M..-P..	3.5	23	0	40	60.5	6	20.5	87.5	42	42	60	38NiCrMo4	1071.291.042

FF
Sabitleme rondelası / Stop bottom plate / Endscheibe /
Fondello di arresto / Bouchon de fermeture / Tapón de detención

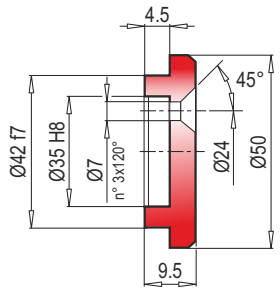

Kod / Code
Bestell - Nr. / Codice
Code / Código
1075.034.000

BS
Spline kaplin / Splined bushing / Innenverzahnte Buchse /
Boccola scanalata / Moyeu cannelé / Casquillo ranurado

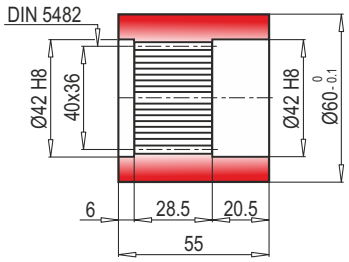

Malzeme / Material
Material / Materiale
Matière / Material
UNI C40
SAE 1040
DIN Ck40

Kod / Code
Bestell - Nr. / Codice
Code / Código
0171.100.076

KB
Spline mil / Splined rod / Außenverzahnte Welle /
Barra scanalata / Arbre cannelé / Barra ranurada

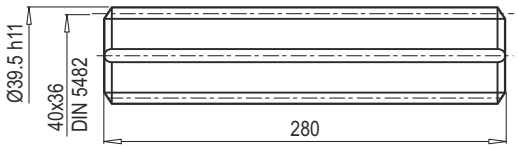

Malzeme / Material
Material / Materiale
Matière / Material

UNI 39NiCrMo3
Sertleşmiş ve tavlanmış / Hardened and tempered
Vergütet / Bonifié
Bonificado / Endurecido e temperado

Kod / Code
Bestell - Nr. / Codice
Code / Código
3071.179.042

FL
Flanş / Flange / Flansch
Flangia / Bride / Brida

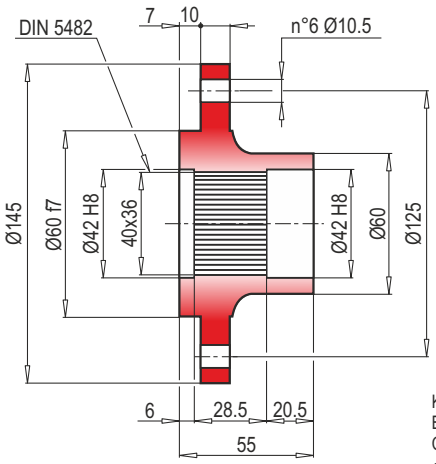

Kod / Code
Bestell - Nr. / Codice
Code / Código
0171.102.025

GA
Konik sıktırma / Shrink disc / Schrumpfscheibe /
Giunto di attrito / Frette de serrage / Disco de contracción

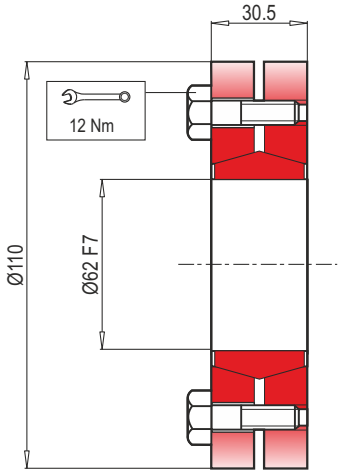

Maksimum moment
Max. torque
Max. Drehmoment
Coppia max.
Couple max.
Momento máx.
2.2 kNm

Kod / Code
Bestell - Nr. / Codice
Code / Código
5109.062.000

TR RADYAL YÜKLER (Fr)

Aşağıdaki grafikler istenilen $n_2$xh değerinin elde edilmesi için gerekli olan radyal yükleri ve K faktörlerini göstermektedir.

EN RADIAL LOADS (Fr)

The following curves show the radial loads and the K factors to obtain the required n2xh value.

DE RADIALLAST (Fr)

In den nachstehenden Diagrammen ist die Radiallast un der Koeffizient K dargestellt und kann mit dem gewünschten Wert $n_2$xh verglichen werden.

IT CARICHI RADIALI (Fr)

Nei diagrammi seguenti sono riportati i carichi radiali e i coefficienti K per rapportarli al valore $n_2$xh desiderato.

FR CHARGES RADIALES (Fr)

Dans les diagrammes suivants sont indiqués les charges radiales et les facteurs K de façon à obtenir la valeur $n_2$xh désirée.

ES CARGAS RADIALES (Fr)

En los siguientes diagramas se indican las cargas radiales y los coefici - entes K para obtener el valor requerido $n_2$xh.

M - P - CPC*

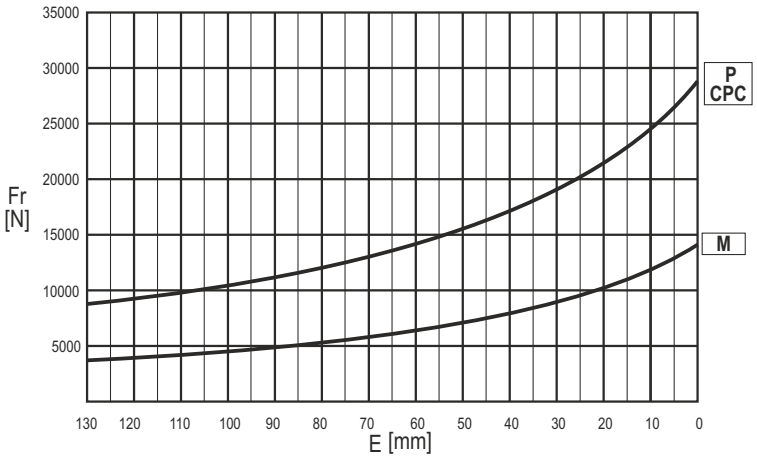

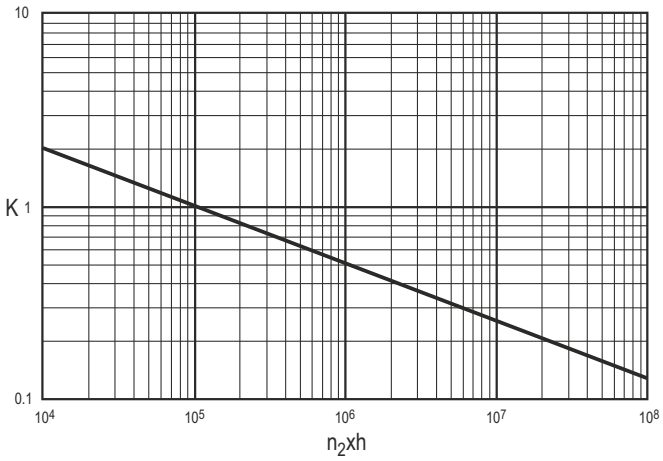

	n x h				
	10^5	10^4	10^6	10^7	10^8
M - P	Fr	Fr • K			
CPC*	Fr • 0.75	Fr • K • 0.75			

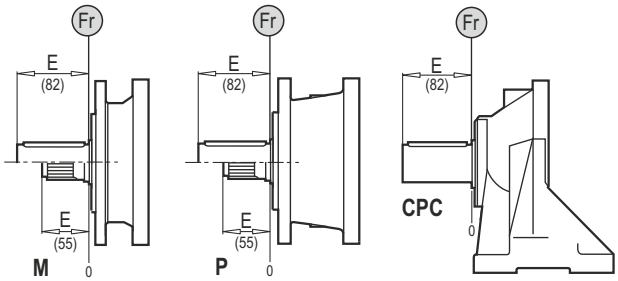

TR EKSENEL YÜKLER (Fa)

Tabloda yer alan eksenel yük değerleri, çıkış tipine ve uygulamanın yük yönüne göre değişir.

EN AXIAL LOADS (Fa)

The values of the axial loads in the table refer to the output versions and load direction of application.

DE AXIALLAST (Fa)

Die dargestellten Werte der Axiallast basieren auf der Version und der applizierten Lastrichtung.

IT CARICHI ASSIALI (Fa)

I valori dei carichi assiali indicati in tabella sono riferiti alle versioni e alla direzione di applicazione del carico.

FR CHARGES AXIALES (Fa)

Les valeurs des charges axiales indiquées dans le tableau se réfèrent aux versions et à la direction d'application de lacharge.

ES CARGAS AXIALES (Fa)

Los valores de las cargas axiales indicados en la tabla se refieren a las versiones y a la dirección de aplicación de la carga.

Fa [N]	M	P - CPC	
	16000	18000	←
	16000	18000	→

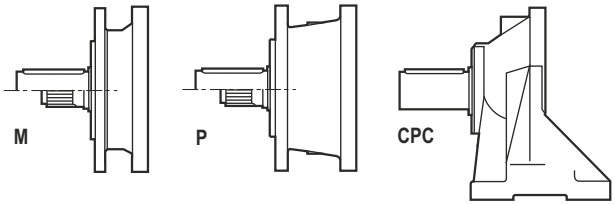

TEKNİK VERİLER / TECHNICAL DATA / TECHNISCHE DATEN / DATI TECNICI / DONNÉES TECHNIQUES / DATOS TÉCNICAS

	i_{ges}	M_2max (n1: 1400rpm) (Nm)
1601	3.56 ... 6.75	730
1602	12.6 ... 58.5	1020
1603	54.2 ... 394.9	1440
1604	337.4 ... 3422.2	2080

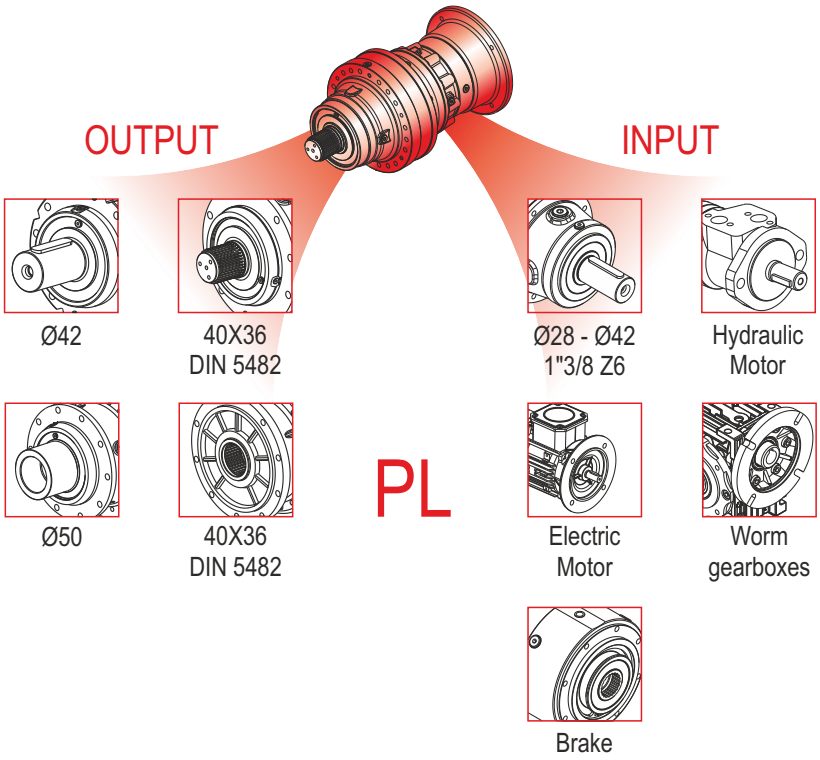

	i_{ges}	M_2max (n1: 1400rpm) (Nm)
1602	10.4 ... 19.8	880
1603	37.1 ... 171.6	1230
1604	131.8 ... 1487.2	1760

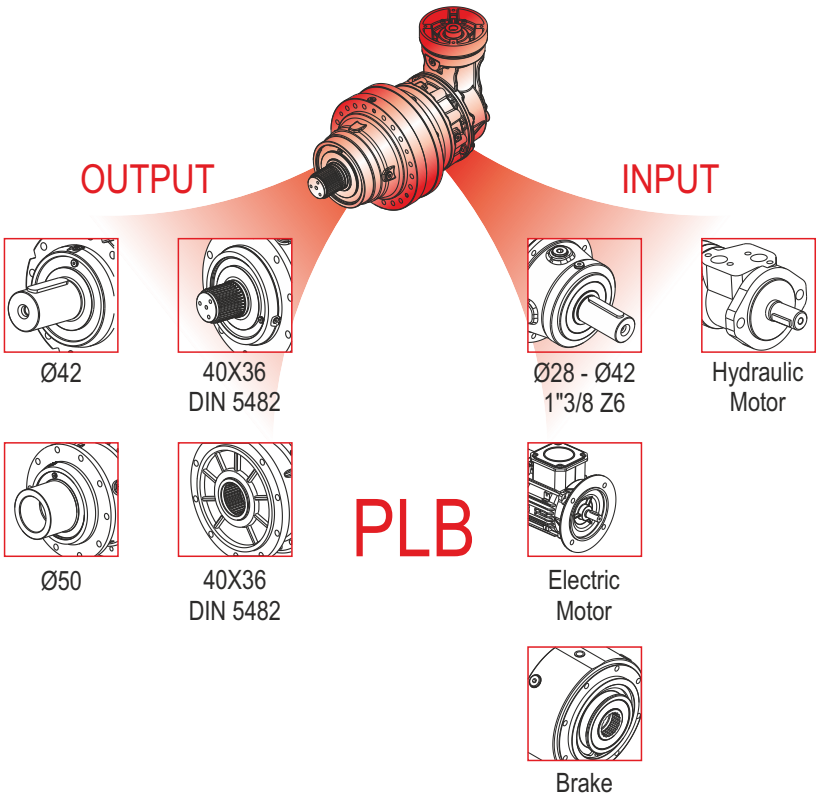

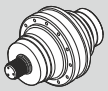	Pt [kW]	n_{1max} [min^{-1}]	i_{ges}	Mc [kNm] n_2 x h 10.000	n_2 x h 20.000	n_2 x h 50.000	n_2 x h 100.000	Giriş- Input - Antrieb - Entrata - Entrée - Entrada IEC (B5)	PMRV / PRV	EL - EML EM - EP - ET
PL 1601	12	2800	3.56	1.96	1.73	1.48	1.31	63 100	50	EL C 28
			4.29	1.96	1.73	1.48	1.31	71 112	63	EL C 42
			5.60	1.40	1.23	1.05	0.93	80 132	75	EML 42
			6.75	1.15	1.02	0.87	0.77	90 160	90	EML 1"3/8 Z6
PL 1602	8	2800	12.6	1.96	1.73	1.48	1.31	63 71 80 90 100 112 132	50 63 75 90	EL C 28 EL C 42 EML 42 EML 1"3/8 Z6
			15.2	1.96	1.73	1.48	1.31			
			19.9	1.96	1.73	1.48	1.31			
			24.0	1.96	1.73	1.48	1.31			
			28.9	1.96	1.73	1.48	1.31			
			31.4	1.40	1.23	1.05	0.93			
			37.8	1.40	1.23	1.05	0.93			
			45.6	1.15	1.02	0.87	0.77			
			58.5	1.15	1.02	0.87	0.77			
PL 1603	5	2800	54.2	1.96	1.73	1.48	1.31	63 71 80 90 100 112 132	50 63 75 90	EL C 28 EL C 42 EML 42 EML 1"3/8 Z6
			65.3	1.96	1.73	1.48	1.31			
			70.8	1.96	1.73	1.48	1.31			
			78.7	1.96	1.73	1.48	1.31			
			85.3	1.96	1.73	1.48	1.31			
			102.9	1.96	1.73	1.48	1.31			
			111.5	1.96	1.73	1.48	1.31			
			134.4	1.96	1.73	1.48	1.31			
			162.0	1.96	1.73	1.48	1.31			
			172.6	1.96	1.73	1.48	1.31			
			208.0	1.96	1.73	1.48	1.31			
			211.7	1.40	1.23	1.05	0.93			
			255.2	1.40	1.23	1.05	0.93			
			271.8	1.40	1.23	1.05	0.93			
			307.5	1.15	1.02	0.87	0.77			
			327.6	1.40	1.23	1.05	0.93			
			394.9	1.15	1.02	0.87	0.77			
PL 1604	1.5	2800	337.4	1.96	1.73	1.48	1.31	63 71 80 90	50 63 75 90	EL C 28 EL C 42 EML 42 EML 1"3/8 Z6
			365.7	1.96	1.73	1.48	1.31			
			396.4	1.96	1.73	1.48	1.31			
			440.8	1.96	1.73	1.48	1.31			
			477.9	1.96	1.73	1.48	1.31			
			531.3	1.96	1.73	1.48	1.31			
			576.0	1.96	1.73	1.48	1.31			
			624.4	1.96	1.73	1.48	1.31			
			694.3	1.96	1.73	1.48	1.31			
			752.6	1.96	1.73	1.48	1.31			
			836.9	1.96	1.73	1.48	1.31			
			907.2	1.96	1.73	1.48	1.31			
			966.3	1.96	1.73	1.48	1.31			
			1093.5	1.96	1.73	1.48	1.31			
			1144.5	1.96	1.73	1.48	1.31			
			1185.4	1.40	1.23	1.05	0.93			
			1318.1	1.96	1.73	1.48	1.31			
			1428.8	1.40	1.23	1.05	0.93			
			1692.3	1.96	1.73	1.48	1.31			
			3422.2	1.15	1.02	0.87	0.77			

	Pt [kW]	n_{1max} [min^{-1}]	i_{ges}	Mc [kNm]				Giriş- Input - Antrieb - Entrata - Entrée - Entrada	
				n_2 x h	n_2 x h	n_2 x h	n_2 x h		
				10.000	20.000	50.000	100.000	IEC (B5)	EL - EML EM - EP - ET
PLB 1602	8	2800	10.4 12.6 16.4 19.8	1.96 1.96 1.40 1.15	1.73 1.73 1.23 1.02	1.48 1.48 1.05 0.87	1.31 1.31 0.93 0.77	80 90 100 112 132	EL C 28 EL C 42 EML 42 EML 1"3/8 Z6
PLB 1603	5	2800	37.1 44.7 53.9 58.4 70.4 84.9 92.0 110.9 133.6 171.6	1.96 1.96 1.96 1.96 1.96 1.96 1.40 1.40 1.15 1.15	1.73 1.73 1.73 1.73 1.73 1.73 1.23 1.23 1.02 1.02	1.48 1.48 1.48 1.48 1.48 1.48 1.05 1.05 0.87 0.87	1.31 1.31 1.31 1.31 1.31 1.31 0.93 0.93 0.77 0.77	80 90 100 112 132	EL C 28 EL C 42 EML 42 EML 1"3/8 Z6
PLB 1604	1.5	2800	131.8 158.9 191.6 207.7 230.9 301.7 327.1 363.7 394.2 475.2 515.1 572.8 610.1 735.4 797.2 960.9 1158.3 1233.8 1487.2	1.96 1.96 1.96 1.96 1.96 1.96 1.96 1.96 1.96 1.96 1.40 1.96 1.96 1.96 1.40 1.40 1.15 1.40 1.15	1.73 1.73 1.73 1.73 1.73 1.73 1.73 1.73 1.73 1.73 1.23 1.73 1.73 1.73 1.23 1.23 1.02 1.23 1.02	1.48 1.48 1.48 1.48 1.48 1.48 1.48 1.48 1.48 1.48 1.05 1.48 1.48 1.48 1.05 1.05 0.87 1.05 0.87	1.31 1.31 1.31 1.31 1.31 1.31 1.31 1.31 1.31 1.31 0.93 1.31 1.31 1.31 0.93 0.93 0.77 0.93 0.77	80 90	EL C 28 EL C 42 EML 42 EML 1"3/8 Z6

⚠

(n_2 x h = 20.000)

$$M_{max} = M_c \times 2$$

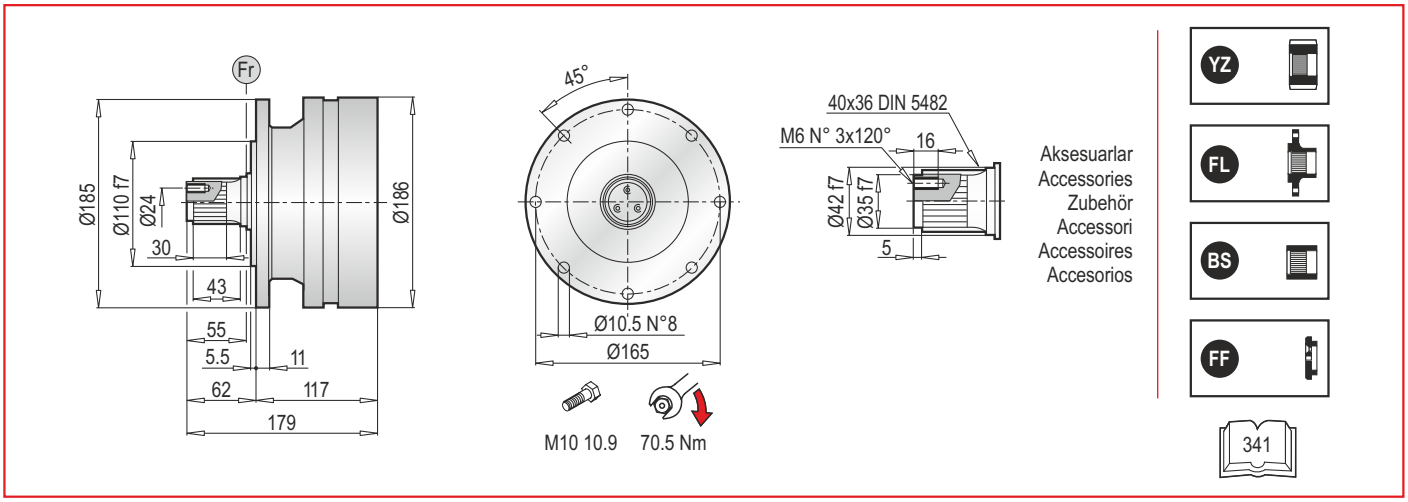

PL 1600 MS - Elektrik Motor Adaptörleri (IEC) / Electrıc Motor Couplings (IEC) /Anbauvorrichtung Für Elektromotore (IEC) / Predisposizioni Per Motori Elettrici (IEC) / Adaptations Pour Moteurs Electriques (IEC) /Acoplamientos Para Motores Eléctricos (IEC)

PL	IEC 63			IEC 71			IEC 80			IEC 90		
	LT	Z	ØD	LT	Z	ØD	LT	Z	ØD	LT	Z	ØD
1601	153	36	140	153	36	160	173	56	200	173	56	200
1602	201			201			221			221		
1603	249			249			269			269		
1604	297			297			317			317		

PL	IEC 100			IEC 112			IEC 132			IEC 160		
	LT	Z	ØD	LT	Z	ØD	LT	Z	ØD	LT	Z	ØD
1601	183	66	250	183	66	250	217	100	300	256	139	350
1602	231			231			265			-		
1603	279			279			313			-		
1604	-			-			-			-		

PL	IEC ~ Kg							
	63	71	80	90	100	112	132	160
1601	21	21	23	23	24	24	28	38
1602	27	27	29	29	30	30	34	-
1603	33	33	35	35	36	36	40	-
1604	39	39	41	41	-	-	-	-

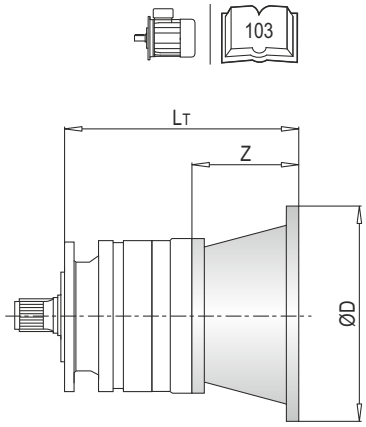

PL 1600 MS - Giriş Milleri / Input Shafts / Antriebswellen / Alberi Entrata / Arbres D'entree / Ejes De Entrada

PL	EL C 28				EL C 42				EML 42				EML 1"3/8 Z6			
	LT	Z	L	Ød	LT	Z	L	Ød	LT	Z	L	Ød	LT	Z	L	Ød
1601	181	64	50	28	181	64	82	42	211	94	82	42	211	94	106	1"3/8
1602	229				229				259				259			
1603	277				277				307				307			
1604	325				325				355				355			

PL	~ Kg			
	EL C 28	EL C 42	EML 42	EML 1"3/8 Z6
1601	21.5	22.0	25.0	25.0
1602	27.5	28.0	31.0	31.0
1603	33.5	34.0	37.0	37.0
1604	39.5	40.0	43.0	43.0

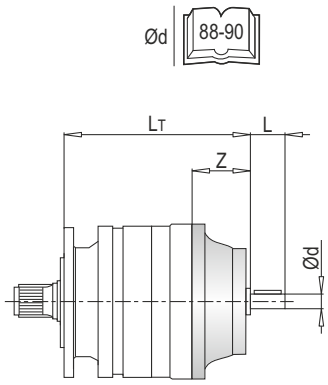

PL 1600 MS - Sonsuz Dişlili Redüktör Adaptörleri (PMRV/PRV) / Worm Gearbox Adaptors (PMRV/PRV) / Anschluss Für Schneckengetriebe (PMRV/PRV) / Predisposizioni Per Riduttori A Vite Senza Fine (PMRV/PRV) / Adaptation Pour Reducteurs A Vis Sans Fin (PMRV/PRV) / Acoplamiento Para Reductores De Tornillo Sin Fin (PMRV/PRV)

PL	PMRV/PRV 050					PMRV/PRV 063				
	LM	l	h	MA	G	LM	l	h	MA	G
1601	242.5	50	110	60	80	252	63	135	72	95
1602	290.5					300				
1603	338.5					348				
1604	386.5					396				

PL	PMRV/PRV 075					PMRV/PRV 090				
	LM	l	h	MA	G	LM	l	h	MA	G
1601	231	75	161	86	112.5	241	90	193	103	129.5
1602	279					289				
1603	327					337				
1604	375					385				

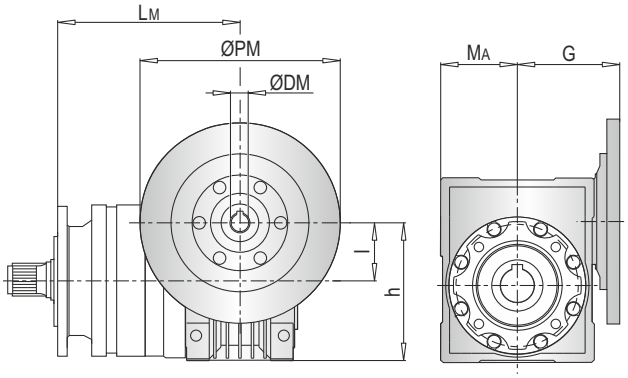

ØPM
ØDM
105

PL	PMRV/PRV ~ Kg			
	050	063	075	090
1601	24	27.5	30	35
1602	30	33.5	36	41
1603	36	39.5	42	47
1604	42	45.5	48	53

PLB 1600 MS - Elektrik Motor Adaptörleri (IEC) / Electric Motor Couplings (IEC) / Anbauvorrichtung Für Elektromotore (IEC) / Predisposizioni Per Motori Elettrici (IEC) / Adaptations Pour Moteurs Electriques (IEC) / Acoplamientos Para Motores Eléctricos (IEC)

PLB	IEC 80				IEC 90				IEC 100				IEC 112			
	A	LT	Z	ØD	A	LT	Z	ØD	A	LT	Z	ØD	A	LT	Z	ØD
1602	192	216	56	200	192	216	56	200	192	226	66	250	192	226	66	250
1603	240				240				240				240			
1604	288				288				-				-			

PLB	IEC 132			
	A	LT	Z	ØD
1602	192	260	100	300
1603	240			
1604	-			

PLB	IEC ~ Kg				
	80	90	100	112	132
1602	38	38	39	39	43
1603	44	44	45	45	49
1604	50	50	-	-	-

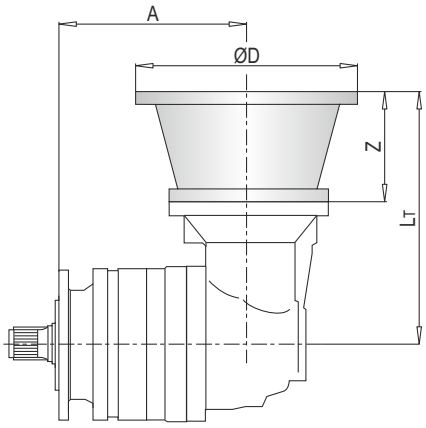

103

PLB 1600 MS - Giriş Milleri / Input Shafts / Antriebswellen / Alberi Entrata / Arbres D'entree / Ejes De Entrada

PLB	EL C 28					EL C 42					EML 42					EML 1"3/8 Z6				
	A	LT	Z	L	Ød	A	LT	Z	L	Ød	A	LT	Z	L	Ød	A	LT	Z	L	Ød
1602	192	224	64	50	28	192	224	64	82	42	192	254	94	82	42	192	254	94	106	1"3/8
1603	240					240					240					240				
1604	288					288					288					288				

PLB	~ Kg			
	EL C 28	EL C 42	EML 42	EML 1"3/8 Z6
1602	36.5	37.0	40.0	40.0
1603	42.5	43.0	46.0	46.0
1604	48.5	49.0	52.0	52.0

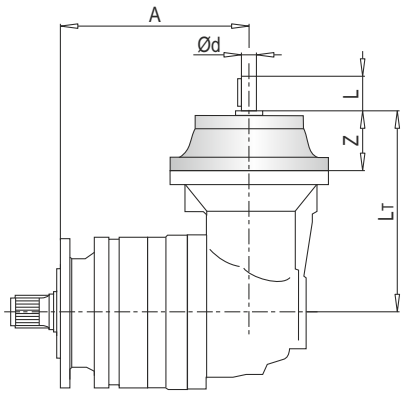

Ød
88-90

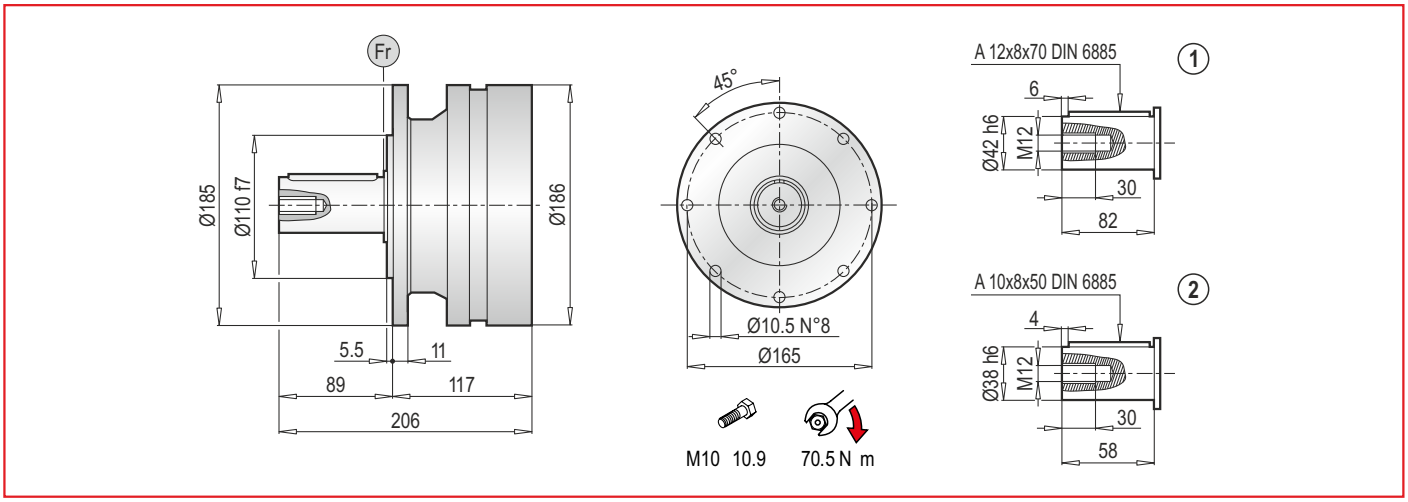

PL 1600 MC - Elektrik Motor Adaptörleri (IEC) / Electrıc Motor Couplings (IEC) /Anbauvorrichtung Für Elektromotore (IEC) / Predisposizioni Per Motori Elettrici (IEC) / Adaptations Pour Moteurs Electriques (IEC) /Acoplamientos Para Motores Eléctricos (IEC)

PL	IEC 63			IEC 71			IEC 80			IEC 90		
	LT	Z	ØD	LT	Z	ØD	LT	Z	ØD	LT	Z	ØD
1601	153	36	140	153	36	160	173	56	200	173	56	200
1602	201			201			221			221		
1603	249			249			269			269		
1604	297			297			317			317		

PL	IEC 100			IEC 112			IEC 132			IEC 160		
	LT	Z	ØD	LT	Z	ØD	LT	Z	ØD	LT	Z	ØD
1601	183	66	250	183	66	250	217	100	300	256	139	350
1602	231			231			265			-		
1603	279			279			313			-		
1604	-			-			-			-		

PL	IEC ~ Kg							
	63	71	80	90	100	112	132	160
1601	21	21	23	23	24	24	28	38
1602	27	27	29	29	30	30	34	-
1603	33	33	35	35	36	36	40	-
1604	39	39	41	41	-	-	-	-

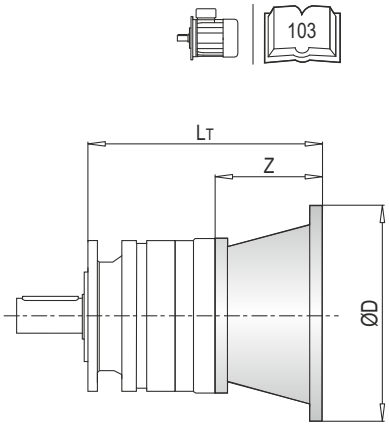

PL 1600 MC - Giriş Milleri / Input Shafts / Antriebswellen / Alberi Entrata / Arbres D'entree / Ejes De Entrada

PL	EL C 28				EL C 42				EML 42				EML 1"3/8 Z6			
	LT	Z	L	Ød	LT	Z	L	Ød	LT	Z	L	Ød	LT	Z	L	Ød
1601	181	64	50	28	181	64	82	42	211	94	82	42	211	94	106	1"3/8
1602	229				229				259				259			
1603	277				277				307				307			
1604	325				325				355				355			

PL	~ Kg			
	EL C 28	EL C 42	EML 42	EML 1"3/8 Z6
1601	21.5	22.0	25.0	25.0
1602	27.5	28.0	31.0	31.0
1603	33.5	34.0	37.0	37.0
1604	39.5	40.0	43.0	43.0

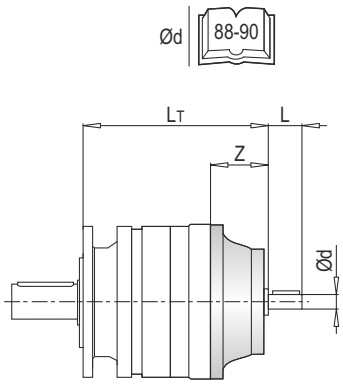

PL 1600 MC - Sonsuz Dişlili Redüktör Adaptörleri (PMRV/PRV) / Worm Gearbox Adaptors (PMRV/PRV) / Anschluss Für Schneckengetriebe (PMRV/PRV) / Predisposizioni Per Riduttori A Vite Senza Fine (PMRV/PRV) / Adaptation Pour Reducteurs A Vis Sans Fin (PMRV/PRV) / Acoplamiento Para Reductores De Tornillo Sin Fin (PMRV/PRV)

PL	PMRV/PRV 050					PMRV/PRV 063				
	LM	l	h	MA	G	LM	l	h	MA	G
1601	242.5	50	110	60	80	252	63	135	72	95
1602	290.5					300				
1603	338.5					348				
1604	386.5					396				

PL	PMRV/PRV 075					PMRV/PRV 090				
	LM	l	h	MA	G	LM	l	h	MA	G
1601	231	75	161	86	112.5	241	90	193	103	129.5
1602	279					289				
1603	327					337				
1604	375					385				

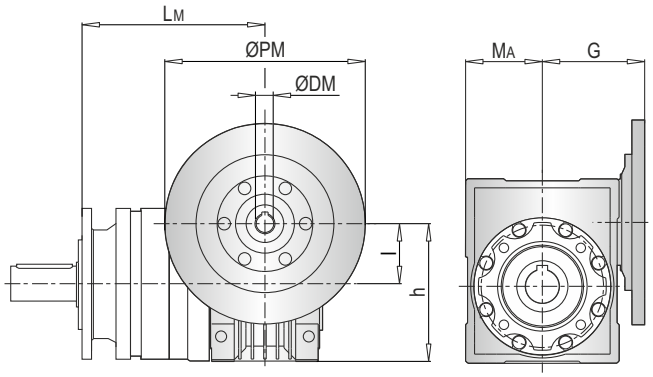

ØPM
ØDM
105

PL	PMRV/PRV ~ Kg			
	050	063	075	090
1601	24	27.5	30	35
1602	30	33.5	36	41
1603	36	39.5	42	47
1604	42	45.5	48	53

PLB 1600 MC - Elektrik Motor Adaptörleri (IEC) / Electric Motor Couplings (IEC) / Anbauvorrichtung Für Elektromotore (IEC) / Predisposizioni Per Motori Elettrici (IEC) / Adaptations Pour Moteurs Electriques (IEC) / Acoplamientos Para Motores Eléctricos (IEC)

PLB	IEC 80				IEC 90				IEC 100				IEC 112			
	A	LT	Z	ØD	A	LT	Z	ØD	A	LT	Z	ØD	A	LT	Z	ØD
1602	192	216	56	200	192	216	56	200	192	226	66	250	192	226	66	250
1603	240				240				240				240			
1604	288				288				-				-			

PLB	IEC 132			
	A	LT	Z	ØD
1602	192	260	100	300
1603	240			
1604	-			

PLB	IEC ~ Kg				
	80	90	100	112	132
1602	38	38	39	39	43
1603	44	44	45	45	49
1604	50	50	-	-	-

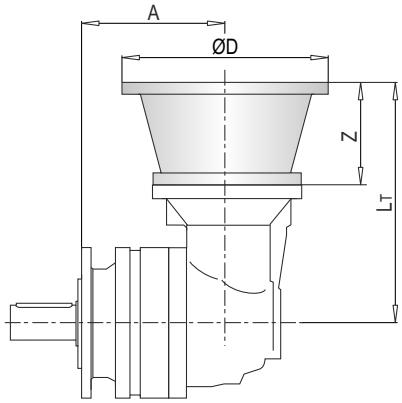

103

PLB 1600 MC - Giriş Milleri / Input Shafts / Antriebswellen / Alberi Entrata / Arbres D'entree / Ejes De Entrada

PLB	EL C 28					EL C 42					EML 42					EML 1"3/8 Z6				
	A	LT	Z	L	Ød	A	LT	Z	L	Ød	A	LT	Z	L	Ød	A	LT	Z	L	Ød
1602	192	224	64	50	28	192	224	64	82	42	192	254	94	82	42	192	254	94	106	1"3/8
1603	240					240					240					240				
1604	288					288					288					288				

PLB	~ Kg			
	EL C 28	EL C 42	EML 42	EML 1"3/8 Z6
1602	36.5	37.0	40.0	40.0
1603	42.5	43.0	46.0	46.0
1604	48.5	49.0	52.0	52.0

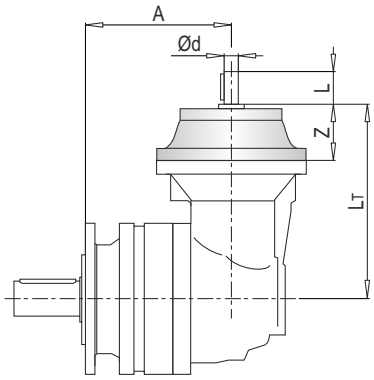

Ød
88-90

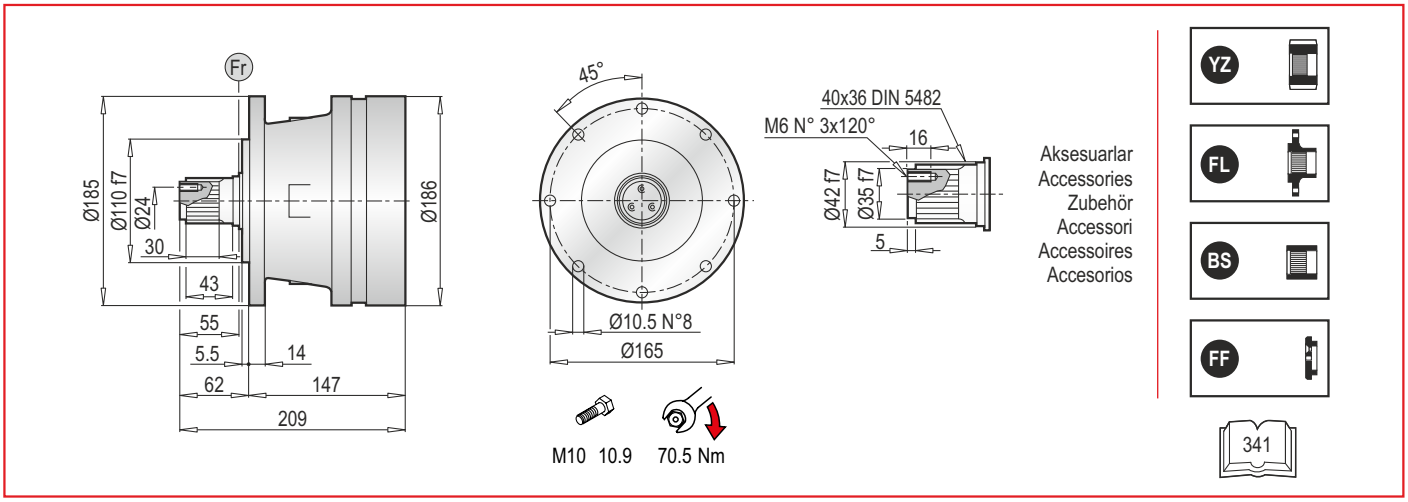

PL 1600 PS - Elektrik Motor Adaptörleri (IEC) / Electric Motor Couplings (IEC) / Anbauvorrichtung Für Elektromotore (IEC) / Predisposizioni Per Motori Elettrici (IEC) / Adaptations Pour Moteurs Electriques (IEC) / Acoplamientos Para Motores Eléctricos (IEC)

PL	IEC 63			IEC 71			IEC 80			IEC 90		
	LT	Z	ØD	LT	Z	ØD	LT	Z	ØD	LT	Z	ØD
1601	183	36	140	183	36	160	203	56	200	203	56	200
1602	231			231			251			251		
1603	279			279			299			299		
1604	327			327			347			347		

PL	IEC 100			IEC 112			IEC 132			IEC 160		
	LT	Z	ØD	LT	Z	ØD	LT	Z	ØD	LT	Z	ØD
1601	213	66	250	213	66	250	247	100	300	286	139	350
1602	261			261			295			-		
1603	309			309			343			-		
1604	-			-			-			-		

PL	IEC ~ Kg							
	63	71	80	90	100	112	132	160
1601	23	23	25	25	26	26	30	40
1602	29	29	31	31	32	32	36	-
1603	35	35	37	37	38	38	42	-
1604	41	41	43	43	-	-	-	-

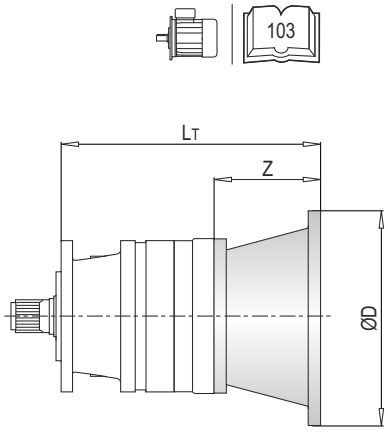

PL 1600 PS - Giriş Milleri / Input Shafts / Antriebswellen / Alberi Entrata / Arbres D'entree / Ejes De Entrada

PL	EL C 28				EL C 42				EML 42				EML 1"3/8 Z6			
	LT	Z	L	Ød	LT	Z	L	Ød	LT	Z	L	Ød	LT	Z	L	Ød
1601	211	64	50	28	211	64	82	42	241	94	82	42	241	94	106	1"3/8
1602	259				259				289				289			
1603	307				307				337				337			
1604	355				355				385				385			

PL	~ Kg			
	EL C 28	EL C 42	EML 42	EML 1"3/8 Z6
1601	23.5	24.0	27.0	27.0
1602	27.5	28.0	31.0	31.0
1603	33.5	34.0	37.0	37.0
1604	39.5	40.0	43.0	43.0

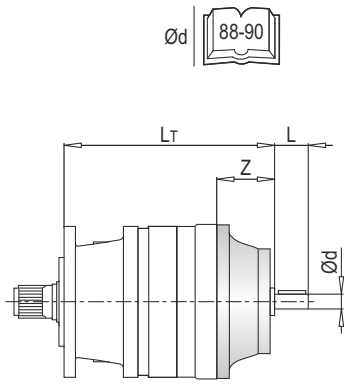

PL 1600 PS - Sonsuz Dişlili Redüktör Adaptörleri (PMRV/PRV) / Worm Gearbox Adaptors (PMRV/PRV) / Anschluss Für Schneckengetriebe (PMRV/PRV) / Predisposizioni Per Riduttori A Vite Senza Fine (PMRV/PRV) / Adaptation Pour Reducteurs A Vis Sans Fin (PMRV/PRV) / Acoplamiento Para Reductores De Tornillo Sin Fin (PMRV/PRV)

PL	PMRV/PRV 050					PMRV/PRV 063				
	LM	l	h	MA	G	LM	l	h	MA	G
1601	272.5	50	110	60	80	282	63	135	72	95
1602	320.5					330				
1603	368.5					378				
1604	416.5					426				

PL	PMRV/PRV 075					PMRV/PRV 090				
	LM	l	h	MA	G	LM	l	h	MA	G
1601	261	75	161	86	112.5	271	90	193	103	129.5
1602	309					319				
1603	357					367				
1604	405					415				

PL	PMRV/PRV~ Kg			
	050	063	075	090
1601	26	29.5	32	37
1602	32	35.5	38	43
1603	38	41.5	44	49
1604	44	47.5	50	55

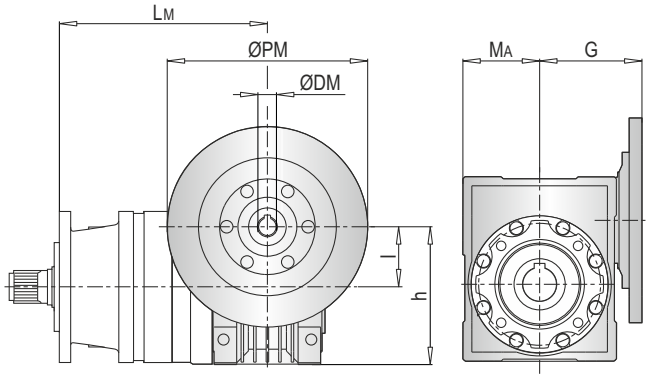

ØPM
ØDM
105

PLB 1600 PS - Elektrik Motor Adaptörleri (IEC) / Electric Motor Couplings (IEC) /Anbauvorrichtung Für Elektromotore (IEC) / Predisposizioni Per Motori Elettrici (IEC) / Adaptations Pour Moteurs Electriques (IEC) /Acoplamientos Para Motores Eléctricos (IEC)

PLB	IEC 80				IEC 90				IEC 100				IEC 112			
	A	LT	Z	ØD	A	LT	Z	ØD	A	LT	Z	ØD	A	LT	Z	ØD
1602	222	216	56	200	222	216	56	200	222	226	66	250	222	226	66	250
1603	270				270				270				270			
1604	318				318											

PLB	IEC 132			
	A	LT	Z	ØD
1602	222	260	100	300
1603	270			
1604	-			

PLB	IEC ~ Kg				
	80	90	100	112	132
1602	40	40	41	41	45
1603	46	46	47	47	51
1604	52	52	-	-	-

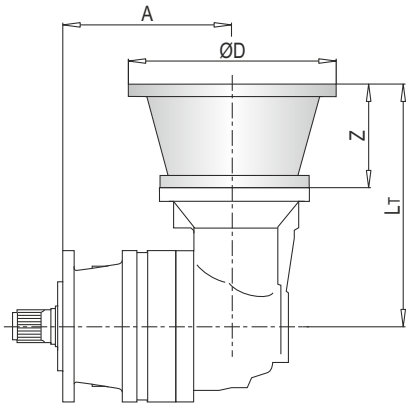

103

PLB 1600 PS - Giriş Milleri / Input Shafts / Antriebswellen / Alberi Entrata / Arbres D'entree / Ejes De Entrada

PLB	EL C 28					EL C 42					EML 42					EML 1"3/8 Z6				
	A	LT	Z	L	Ød	A	LT	Z	L	Ød	A	LT	Z	L	Ød	A	LT	Z	L	Ød
1602	222	224	64	50	28	222	224	64	82	42	222	254	94	82	42	222	254	94	106	1"3/8
1603	270					270					270					270				
1604	318					318					318					318				

PLB	~ Kg			
	EL C 28	EL C 42	EML 42	EML 1"3/8 Z6
1602	36.5	37.0	40.0	40.0
1603	42.5	43.0	46.0	46.0
1604	48.5	49.0	52.0	52.0

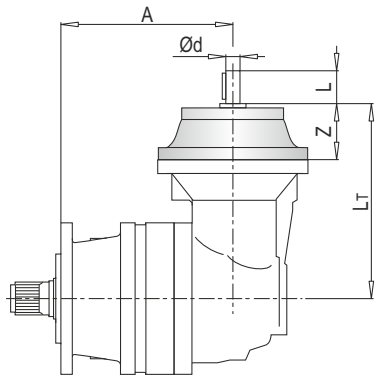

Ød
88-90

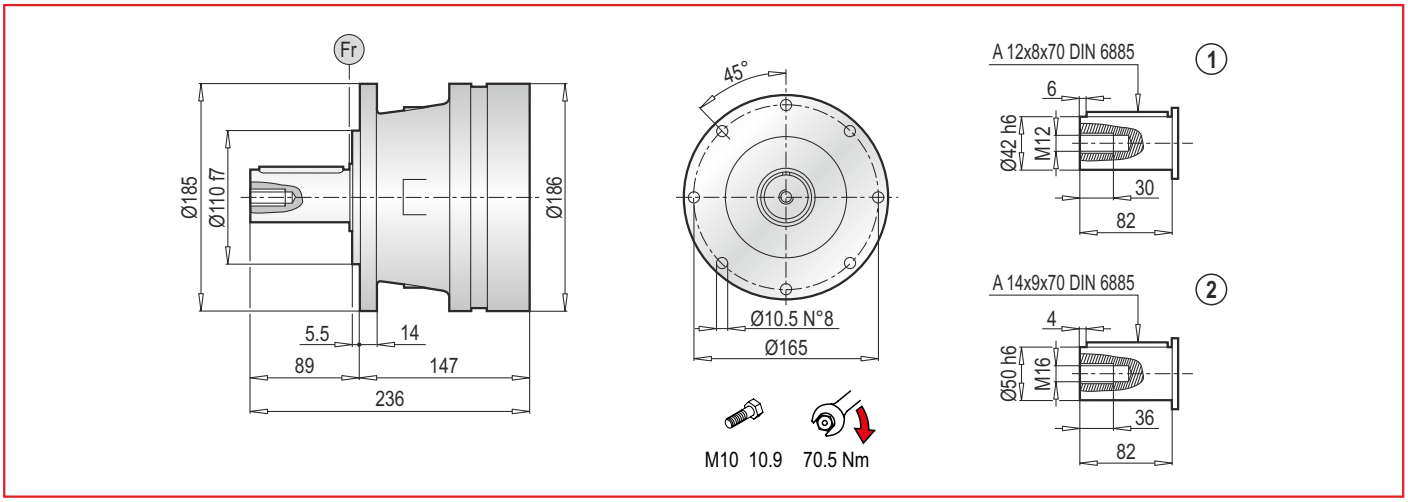

PL 1600 PC - Elektrik Motor Adaptörleri (IEC) / Electrıc Motor Couplings (IEC) / Anbauvorrichtung Für Elektromotore (IEC) / Predisposizioni Per Motori Elettrici (IEC) / Adaptations Pour Moteurs Electriques (IEC) / Acoplamientos Para Motores Eléctricos (IEC)

PL	IEC 63			IEC 71			IEC 80			IEC 90		
	LT	Z	ØD	LT	Z	ØD	LT	Z	ØD	LT	Z	ØD
1601	183	36	140	183	36	160	203	56	200	203	56	200
1602	231			231			251			251		
1603	279			279			299			299		
1604	327			327			347			347		

PL	IEC 100			IEC 112			IEC 132			IEC 160		
	LT	Z	ØD	LT	Z	ØD	LT	Z	ØD	LT	Z	ØD
1601	213	66	250	213	66	250	247	100	300	286	139	350
1602	261			261			295			-		
1603	309			309			343			-		
1604	-			-			-			-		

PL	IEC ~ Kg							
	63	71	80	90	100	112	132	160
1601	23	23	25	25	26	26	30	40
1602	29	29	31	31	32	32	36	-
1603	35	35	37	37	38	38	42	-
1604	41	41	43	43	-	-	-	-

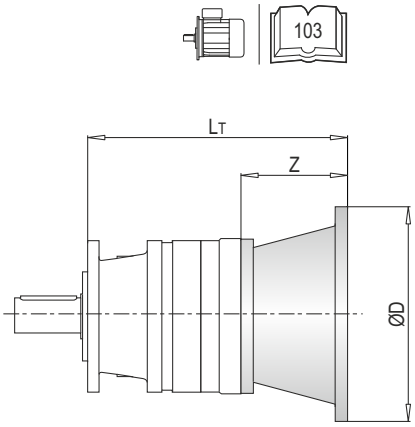

PL 1600 PC - Giriş Milleri / Input Shafts / Antriebswellen / Alberi Entrata / Arbres D'entree / Ejes De Entrada

PL	EL C 28				EL C 42				EML 42				EML 1"3/8 Z6			
	LT	Z	L	Ød	LT	Z	L	Ød	LT	Z	L	Ød	LT	Z	L	Ød
1601	211	64	50	28	211	64	82	42	241	94	82	42	241	94	106	1"3/8
1602	259				259				289				289			
1603	307				307				337				337			
1604	355				355				385				385			

PL	~ Kg			
	EL C 28	EL C 42	EML 42	EML 1"3/8 Z6
1601	23.5	24.0	27.0	27.0
1602	27.5	28.0	31.0	31.0
1603	33.5	34.0	37.0	37.0
1604	39.5	40.0	43.0	43.0

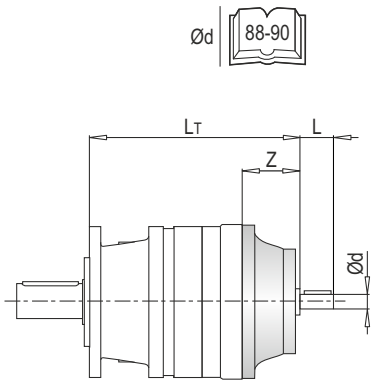

PL 1600 PC - Sonsuz Dişlili Redüktör Adaptörleri (PMRV/PRV) / Worm Gearbox Adaptors (PMRV/PRV) / Anschluss Für Schneckengetriebe (PMRV/PRV) / Predisposizioni Per Riduttori A Vite Senza Fine (PMRV/PRV) / Adaptation Pour Reducteurs A Vis Sans Fin (PMRV/PRV) / Acoplamiento Para Reductores De Tornillo Sin Fin (PMRV/PRV)

PL	PMRV/PRV 050					PMRV/PRV 063				
	LM	l	h	MA	G	LM	l	h	MA	G
1601	272.5	50	110	60	80	282	63	135	72	95
1602	320.5					330				
1603	368.5					378				
1604	416.5					426				

PL	PMRV/PRV 075					PMRV/PRV 090				
	LM	l	h	MA	G	LM	l	h	MA	G
1601	261	75	161	86	112.5	271	90	193	103	129.5
1602	309					319				
1603	357					367				
1604	405					415				

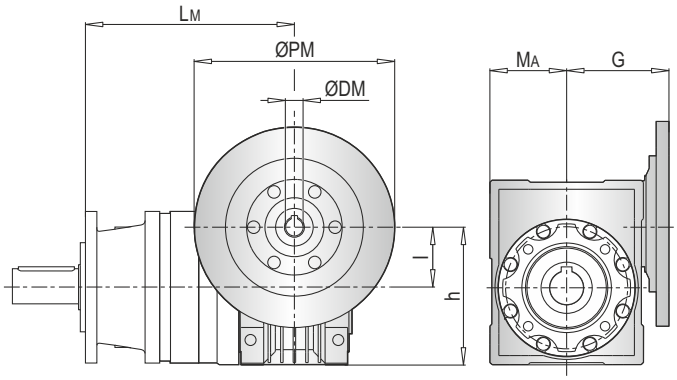

ØPM
ØDM
105

PL	PMRV/PRV~ Kg			
	050	063	075	090
1601	26	29.5	32	37
1602	32	35.5	38	43
1603	38	41.5	44	49
1604	44	47.5	50	55

PLB 1600 PC - Elektrik Motor Adaptörleri (IEC) / Electric Motor Couplings (IEC) / Anbauvorrichtung Für Elektromotore (IEC) / Predisposizioni Per Motori Elettrici (IEC) / Adaptations Pour Moteurs Electriques (IEC) / Acoplamientos Para Motores Eléctricos (IEC)

PLB	IEC 80				IEC 90				IEC 100				IEC 112			
	A	LT	Z	ØD	A	LT	Z	ØD	A	LT	Z	ØD	A	LT	Z	ØD
1602	222	216	56	200	222	216	56	200	222	226	66	250	222	226	66	250
1603	270				270				270				270			
1604	318				318				-				-			

PLB	IEC 132			
	A	LT	Z	ØD
1602	222	260	100	300
1603	270			
1604	-			

PLB	IEC ~ Kg				
	80	90	100	112	132
1602	40	40	41	41	45
1603	46	46	47	47	51
1604	52	52	-	-	-

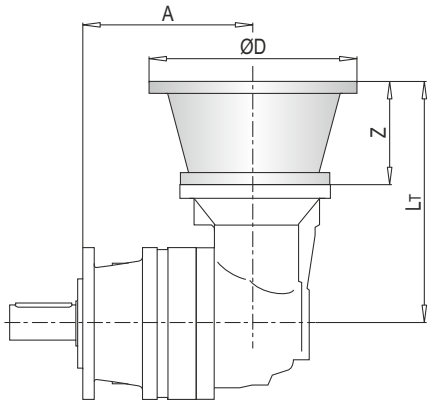

103

PLB 1600 PC - Giriş Milleri / Input Shafts / Antriebswellen / Alberi Entrata / Arbres D'entree / Ejes De Entrada

PLB	EL C 28					EL C 42					EML 42					EML 1"3/8 Z6				
	A	LT	Z	L	Ød	A	LT	Z	L	Ød	A	LT	Z	L	Ød	A	LT	Z	L	Ød
1602	222	224	64	50	28	222	224	64	82	42	222	254	94	82	42	222	254	94	106	1"3/8
1603	270					270					270					270				
1604	318					318					318					318				

PLB	~ Kg			
	EL C 28	EL C 42	EML 42	EML 1"3/8 Z6
1602	36.5	37.0	40.0	40.0
1603	42.5	43.0	46.0	46.0
1604	48.5	49.0	52.0	52.0

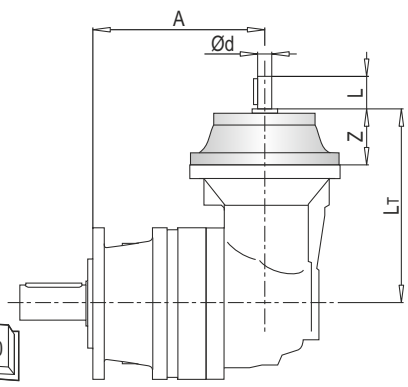

Ød
88-90

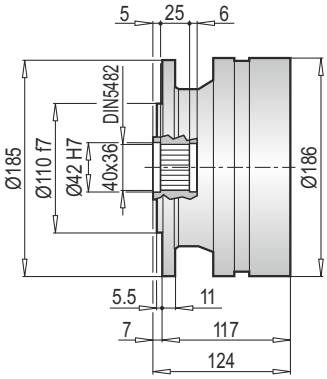

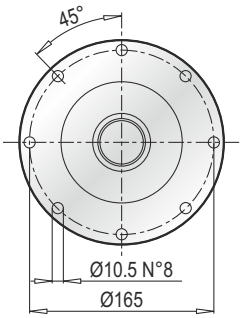

M10 10.9 70.5 Nm

Aksesuarlar
Accessories
Zubehör
Accessori
Accessoires
Accesorios

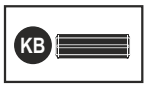

PL 1600 F - Elektrik Motor Adaptörleri (IEC) / Electrıc Motor Couplings (IEC) / Anbauvorrichtung Für Elektromotore (IEC) / Predisposizioni Per Motori Elettrici (IEC) / Adaptations Pour Moteurs Electriques (IEC) / Acoplamientos Para Motores Eléctricos (IEC)

PL	IEC 63			IEC 71			IEC 80			IEC 90		
	LT	Z	ØD	LT	Z	ØD	LT	Z	ØD	LT	Z	ØD
1601	153	36	140	153	36	160	173	56	200	173	56	200
1602	201			201			221			221		
1603	249			249			269			269		
1604	297			297			317			317		

PL	IEC 100			IEC 112			IEC 132			IEC 160		
	LT	Z	ØD	LT	Z	ØD	LT	Z	ØD	LT	Z	ØD
1601	183	66	250	183	66	250	217	100	300	256	139	350
1602	231			231			265			-		
1603	279			279			313			-		
1604	-			-			-			-		

PL	IEC ~ Kg							
	63	71	80	90	100	112	132	160
1601	19	19	21	21	22	22	26	36
1602	25	25	27	27	28	28	32	-
1603	31	31	33	33	34	34	38	-
1604	37	37	39	39	-	-	-	-

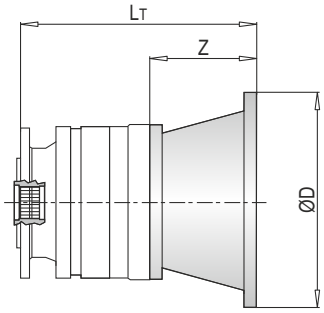

PL 1600 F - Giriş Milleri / Input Shafts / Antriebswellen / Alberi Entrata / Arbres D'entree / Ejes De Entrada

PL	EL C 28				EL C 42				EML 42				EML 1"3/8 Z6			
	LT	Z	L	Ød	LT	Z	L	Ød	LT	Z	L	Ød	LT	Z	L	Ød
1601	181	64	50	28	181	64	82	42	211	94	82	42	211	94	106	1"3/8
1602	229				229				259				259			
1603	277				277				307				307			
1604	325				325				355				355			

PL	~ Kg			
	EL C 28	EL C 42	EML 42	EML 1"3/8 Z6
1601	19.5	20.0	23.0	23.0
1602	25.5	26.0	29.0	29.0
1603	31.5	32.0	35.0	35.0
1604	37.5	38.0	41.0	41.0

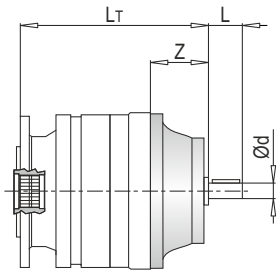

PL 1600 F - Sonsuz Dişlili Redüktör Adaptörleri (PMRV/PRV) / Worm Gearbox Adaptors (PMRV/PRV) / Anschluss Für Schneckengetriebe (PMRV/PRV) / Predisposizioni Per Riduttori A Vite Senza Fine (PMRV/PRV) / Adaptation Pour Reducteurs A Vis Sans Fin (PMRV/PRV) / Acoplamiento Para Reductores De Tornillo Sin Fin (PMRV/PRV)

PL	PMRV/PRV 050					PMRV/PRV 063				
	LM	l	h	MA	G	LM	l	h	MA	G
1601	242.5	50	110	60	80	252	63	135	72	95
1602	290.5					300				
1603	338.5					348				
1604	386.5					396				

PL	PMRV/PRV 075					PMRV/PRV 090				
	LM	l	h	MA	G	LM	l	h	MA	G
1601	231	75	161	86	112.5	241	90	193	103	129.5
1602	279					289				
1603	327					337				
1604	375					385				

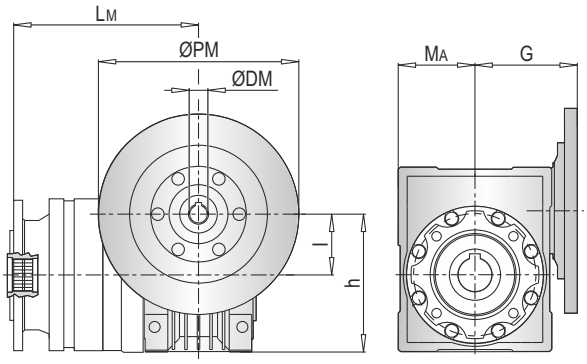

ØPM
ØDM
105

PL	PMRV/PRV ~ Kg			
	050	063	075	090
1601	22	25.5	28	33
1602	28	31.5	34	39
1603	34	37.5	40	45
1604	40	43.5	46	51

PLB 1600 F - Elektrik Motor Adaptörleri (IEC) / Electric Motor Couplings (IEC) / Anbauvorrichtung Für Elektromotore (IEC) / Predisposizioni Per Motori Elettrici (IEC) / Adaptations Pour Moteurs Electriques (IEC) / Acoplamientos Para Motores Eléctricos (IEC)

PLB	IEC 80				IEC 90				IEC 100				IEC 112			
	A	LT	Z	ØD	A	LT	Z	ØD	A	LT	Z	ØD	A	LT	Z	ØD
1602	192	216	56	200	192	216	56	200	192	226	66	250	192	226	66	250
1603	240				240				240				240			
1604	288				288				-				-			

PLB	IEC 132			
	A	LT	Z	ØD
1602	192	260	100	300
1603	240			
1604	-			

PLB	IEC ~ Kg				
	80	90	100	112	132
1602	36	36	37	37	41
1603	42	42	43	43	47
1604	48	48	-	-	-

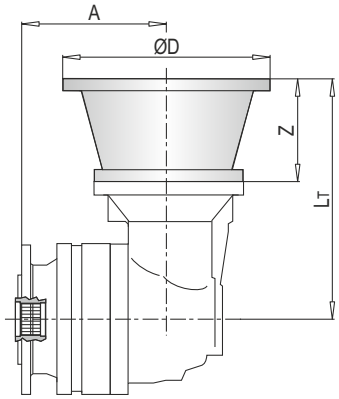

103

PLB 1600 F - Giriş Milleri / Input Shafts / Antriebswellen / Alberi Entrata / Arbres D'entree / Ejes De Entrada

PLB	EL C 28					EL C 42					EML 42					EML 1"3/8 Z6				
	A	LT	Z	L	Ød	A	LT	Z	L	Ød	A	LT	Z	L	Ød	A	LT	Z	L	Ød
1602	192	224	64	50	28	192	224	64	82	42	192	254	94	82	42	192	254	94	106	1"3/8
1603	240					240					240					240				
1604	288					288					288					288				

PLB	~ Kg			
	EL C 28	EL C 42	EML 42	EML 1"3/8 Z6
1602	34.5	35.0	38.0	38.0
1603	40.5	41.0	44.0	44.0
1604	46.5	47.0	50.0	50.0

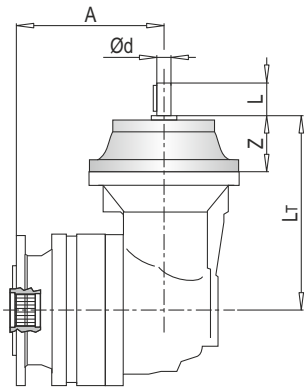

Ød
88-90

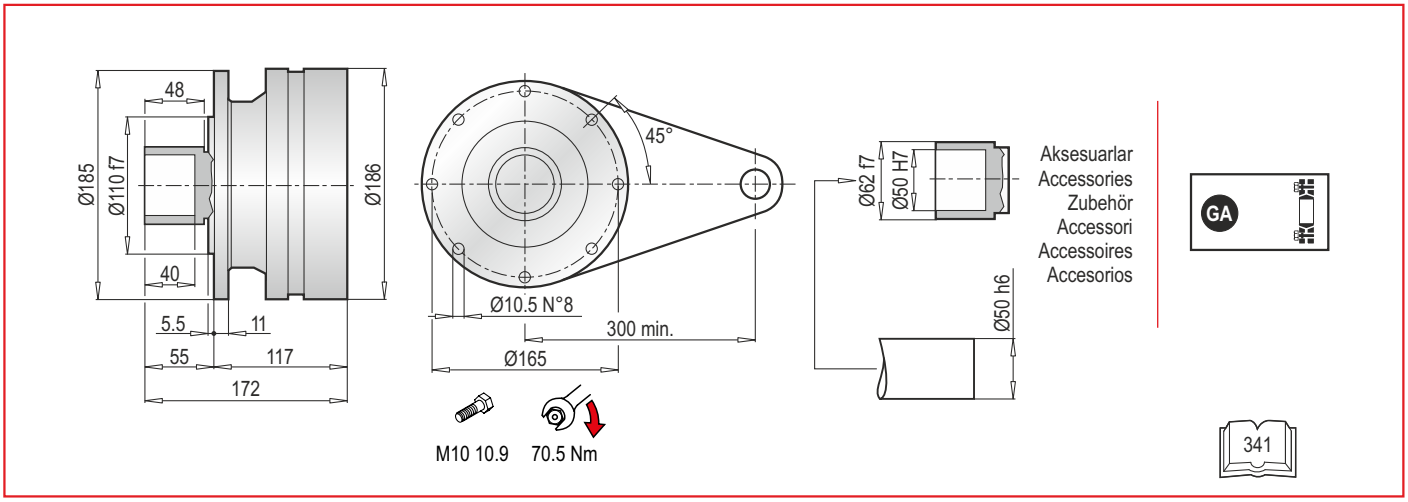

PL 1600 FS - Elektrik Motor Adaptörleri (IEC) / Electrıc Motor Couplings (IEC) / Anbauvorrichtung Für Elektromotore (IEC) / Predisposizioni Per Motori Elettrici (IEC) / Adaptations Pour Moteurs Electriques (IEC) / Acoplamientos Para Motores Eléctricos (IEC)

PL	IEC 63			IEC 71			IEC 80			IEC 90		
	LT	Z	ØD	LT	Z	ØD	LT	Z	ØD	LT	Z	ØD
1601	153	36	140	153	36	160	173	56	200	173	56	200
1602	201			201			221			221		
1603	249			249			269			269		
1604	297			297			317			317		

PL	IEC 100			IEC 112			IEC 132			IEC 160		
	LT	Z	ØD	LT	Z	ØD	LT	Z	ØD	LT	Z	ØD
1601	183	66	250	183	66	250	217	100	300	256	139	350
1602	231			231			265			-		
1603	279			279			313			-		
1604	-			-			-			-		

PL	IEC ~ Kg							
	63	71	80	90	100	112	132	160
1601	22	22	24	24	25	25	29	39
1602	28	28	30	30	31	31	35	-
1603	34	34	36	36	37	37	41	-
1604	40	40	42	42	-	-	-	-

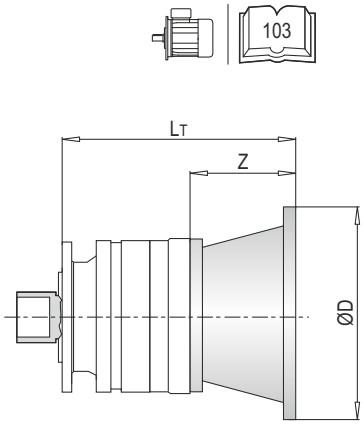

PL 1600 FS - Giriş Milleri / Input Shafts / Antriebswellen / Alberi Entrata / Arbres D'entree / Ejes De Entrada

PL	EL C 28				EL C 42				EML 42				EML 1"3/8 Z6			
	LT	Z	L	Ød	LT	Z	L	Ød	LT	Z	L	Ød	LT	Z	L	Ød
1601	181	64	50	28	181	64	82	42	211	94	82	42	211	94	106	1"3/8
1602	229				229				259				259			
1603	277				277				307				307			
1604	325				325				355				355			

PL	~ Kg			
	EL C 28	EL C 42	EML 42	EML 1"3/8 Z6
1601	22.5	23.0	26.0	26.0
1602	28.5	29.0	32.0	32.0
1603	34.5	35.0	38.0	38.0
1604	40.5	41.0	44.0	44.0

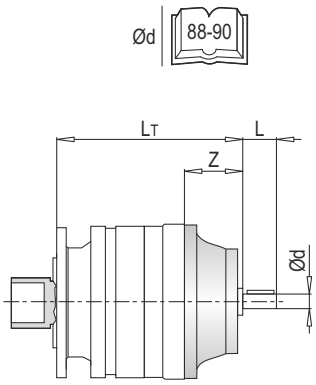

PL 1600 FS - Sonsuz Dişlili Redüktör Adaptörleri (PMRV/PRV) / Worm Gearbox Adaptors (PMRV/PRV) / Anschluss Für Schneckengetriebe (PMRV/PRV) / Predisposizioni Per Riduttori A Vite Senza Fine (PMRV/PRV) / Adaptation Pour Reducteurs A Vis Sans Fin (PMRV/PRV) / Acoplamiento Para Reductores De Tornillo Sin Fin (PMRV/PRV)

PL	PMRV/PRV 050					PMRV/PRV 063				
	LM	l	h	MA	G	LM	l	h	MA	G
1601	242.5	50	110	60	80	252	63	135	72	95
1602	290.5					300				
1603	338.5					348				
1604	386.5					396				

PL	PMRV/PRV 075					PMRV/PRV 090				
	LM	l	h	MA	G	LM	l	h	MA	G
1601	231	75	161	86	112.5	241	90	193	103	129.5
1602	279					289				
1603	327					337				
1604	375					385				

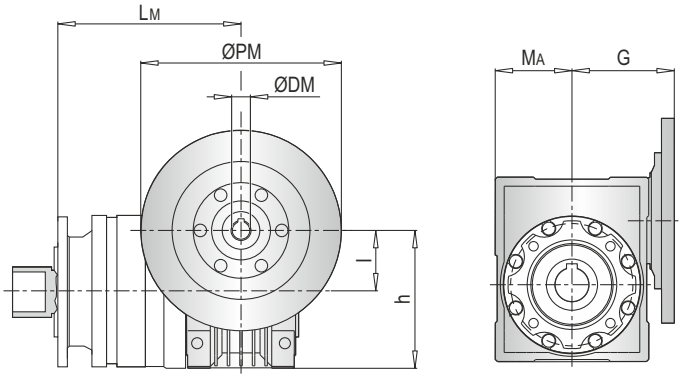

ØPM
ØDM
105

PL	PMRV/PRV ~ Kg			
	050	063	075	090
1601	25	28.5	31	36
1602	31	34.5	37	42
1603	37	40.5	43	48
1604	43	46.5	49	54

PLB 1600 FS - Elektrik Motor Adaptörleri (IEC) / Electric Motor Couplings (IEC) / Anbauvorrichtung Für Elektromotore (IEC) / Predisposizioni Per Motori Elettrici (IEC) / Adaptations Pour Moteurs Electriques (IEC) / Acoplamientos Para Motores Eléctricos (IEC)

PLB	IEC 80				IEC 90				IEC 100				IEC 112			
	A	LT	Z	ØD	A	LT	Z	ØD	A	LT	Z	ØD	A	LT	Z	ØD
1602	192	216	56	200	192	216	56	200	192	226	66	250	192	226	66	250
1603	240				240				240				240			
1604	288				288				-				-			

PLB	IEC 132			
	A	LT	Z	ØD
1602	192	260	100	300
1603	240			
1604	-			

PLB	IEC ~ Kg				
	80	90	100	112	132
1602	39	39	40	40	44
1603	45	45	46	46	50
1604	51	51	-	-	-

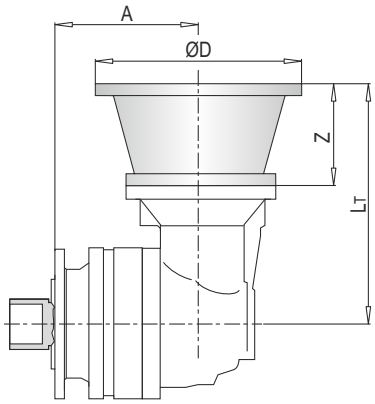

103

PLB 1600 FS - Giriş Milleri / Input Shafts / Antriebswellen / Alberi Entrata / Arbres D'entree / Ejes De Entrada

PLB	EL C 28					EL C 42					EML 42					EML 1"3/8 Z6				
	A	LT	Z	L	Ød	A	LT	Z	L	Ød	A	LT	Z	L	Ød	A	LT	Z	L	Ød
1602	192	224	64	50	28	192	224	64	82	42	192	254	94	82	42	192	254	94	106	1"3/8
1603	240					240					240					240				
1604	288					288					288					288				

PLB	~ Kg			
	EL C 28	EL C 42	EML 42	EML 1"3/8 Z6
1602	37.5	38.0	41.0	41.0
1603	43.5	44.0	47.0	47.0
1604	49.5	50.0	53.0	53.0

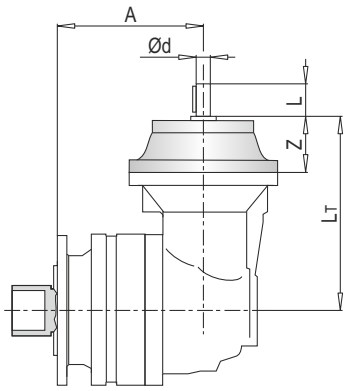

Ød
88-90

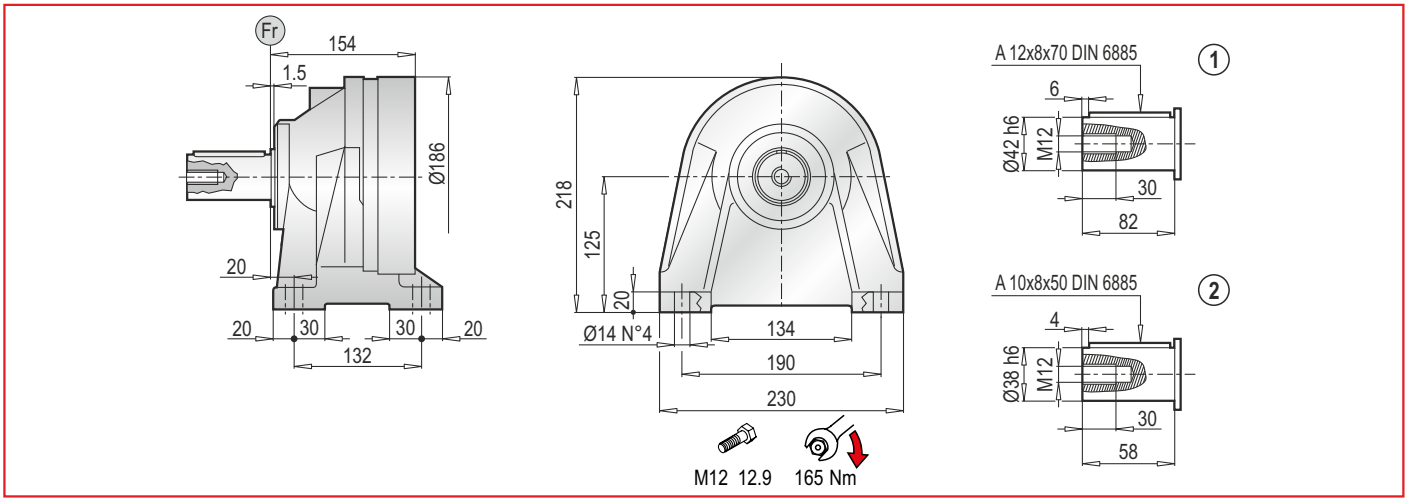

PL 1600 CPC - Elektrik Motor Adaptörleri (IEC) / Electrıc Motor Couplings (IEC) / Anbauvorrichtung Für Elektromotore (IEC) / Predisposizioni Per Motori Elettrici (IEC) / Adaptations Pour Moteurs Electriques (IEC) / Acoplamientos Para Motores Eléctricos (IEC)

PL	IEC 63			IEC 71			IEC 80			IEC 90		
	LT	Z	ØD	LT	Z	ØD	LT	Z	ØD	LT	Z	ØD
1601	190	36	140	190	36	160	210	56	200	210	56	200
1602	238			238			258			258		
1603	286			286			306			306		
1604	334			334			354			354		

PL	IEC 100			IEC 112			IEC 132			IEC 160		
	LT	Z	ØD	LT	Z	ØD	LT	Z	ØD	LT	Z	ØD
1601	220	66	250	220	66	250	254	100	300	293	139	350
1602	268			268			302			-		
1603	316			316			350			-		
1604	-			-			-			-		

PL	IEC ~ Kg							
	63	71	80	90	100	112	132	160
1601	29	29	31	31	32	32	36	46
1602	35	35	37	37	38	38	42	-
1603	41	41	43	43	44	44	48	-
1604	47	47	49	49	-	-	-	-

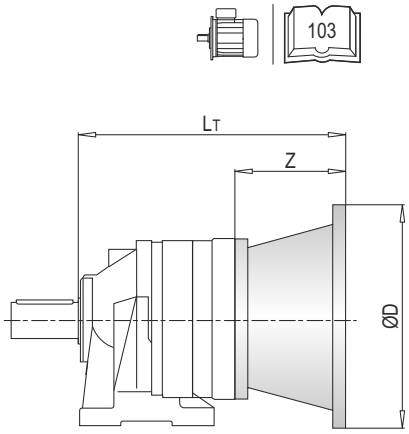

PL 1600 CPC - Giriş Milleri / Input Shafts / Antriebswellen / Alberi Entrata / Arbres D'entree / Ejes De Entrada

PL	EL C 28				EL C 42				EML 42				EML 1"3/8 Z6			
	LT	Z	L	Ød	LT	Z	L	Ød	LT	Z	L	Ød	LT	Z	L	Ød
1601	218	64	50	28	218	64	82	42	248	94	82	42	248	94	106	1"3/8
1602	266				266				296				296			
1603	314				314				344				344			
1604	362				362				392				392			

PL	~ Kg			
	EL C 28	EL C 42	EML 42	EML 1"3/8 Z6
1601	26.5	27.0	30.0	30.0
1602	32.5	33.0	36.0	36.0
1603	38.5	39.0	42.0	42.0
1604	44.5	45.0	48.0	48.0

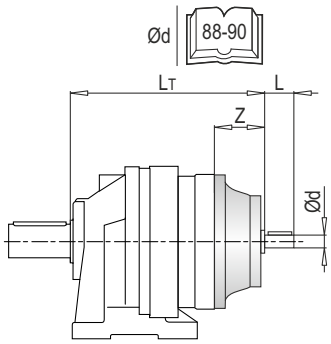

PL 1600 CPC - Sonsuz Dişlili Redüktör Adaptörleri (PMRV/PRV) / Worm Gearbox Adaptors (PMRV/PRV) / Anschluss Für Schneckengetriebe (PMRV/PRV) / Predisposizioni Per Riduttori A Vite Senza Fine (PMRV/PRV) / Adaptation Pour Reducteurs A Vis Sans Fin (PMRV/PRV) / Acoplamiento Para Reductores De Tornillo Sin Fin (PMRV/PRV)

PL	PMRV/PRV 050					PMRV/PRV 063				
	LM	l	h	MA	G	LM	l	h	MA	G
1601	279.5	50	110	60	80	289	63	135	72	95
1602	327.5					337				
1603	375.5					385				
1604	423.5					433				

PL	PMRV/PRV 075					PMRV/PRV 090				
	LM	l	h	MA	G	LM	l	h	MA	G
1601	268	75	161	86	112.5	278	90	193	103	129.5
1602	316					326				
1603	364					374				
1604	412					422				

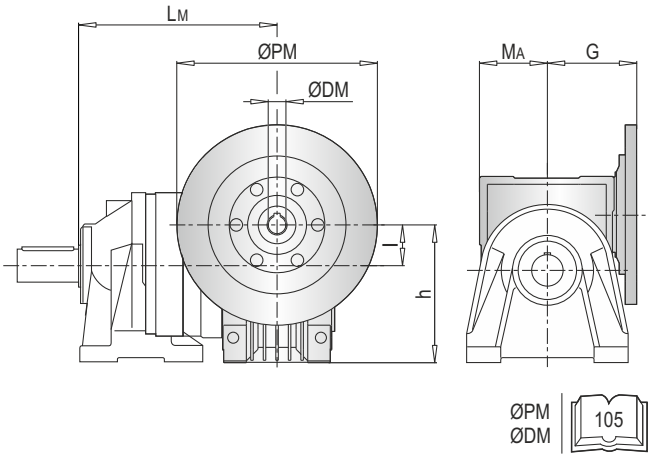

PL	PMRV/PRV ~ Kg			
	050	063	075	090
1601	29	32.5	35	40
1602	35	38.5	41	46
1603	41	44.5	47	52
1604	47	50.5	53	58

PLB 1600 CPC - Elektrik Motor Adaptörleri (IEC) / Electric Motor Couplings (IEC) / Anbauvorrichtung Für Elektromotore (IEC) / Predisposizioni Per Motori Elettrici (IEC) / Adaptations Pour Moteurs Electriques (IEC) / Acoplamientos Para Motores Eléctricos (IEC)

PLB	IEC 80				IEC 90				IEC 100				IEC 112			
	A	LT	Z	ØD	A	LT	Z	ØD	A	LT	Z	ØD	A	LT	Z	ØD
1602	229	216	56	200	229	216	56	200	229	226	66	250	229	226	66	250
1603	277				277				277				277			
1604	325				325				-				-			

PLB	IEC 132			
	A	LT	Z	ØD
1602	229	260	100	300
1603	277			
1604	-			

PLB	IEC ~ Kg				
	80	90	100	112	132
1602	43	43	44	44	48
1603	49	49	50	50	54
1604	55	55	-	-	-

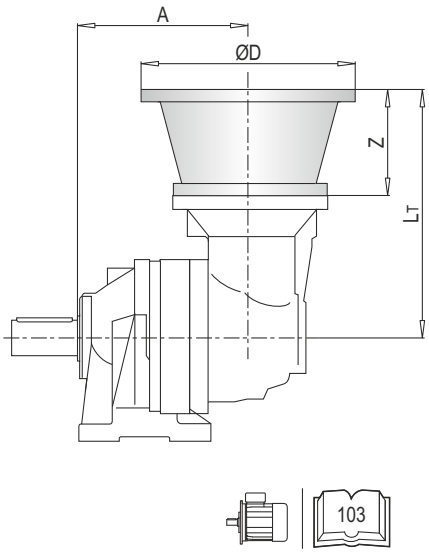

PLB 1600 CPC - Giriş Milleri / Input Shafts / Antriebswellen / Alberi Entrata / Arbres D'entree / Ejes De Entrada

PLB	EL C 28					EL C 42					EML 42					EML 1"3/8 Z6				
	A	LT	Z	L	Ød	A	LT	Z	L	Ød	A	LT	Z	L	Ød	A	LT	Z	L	Ød
1602	229	224	64	50	28	229	224	64	82	42	229	254	94	82	42	229	254	94	106	1"3/8
1603	277					277					277					277				
1604	325					325					325					325				

PLB	~ Kg			
	EL C 28	EL C 42	EML 42	EML 1"3/8 Z6
1602	41.5	42.0	45.0	45.0
1603	47.5	48.0	51.0	51.0
1604	53.5	54.0	57.0	57.0

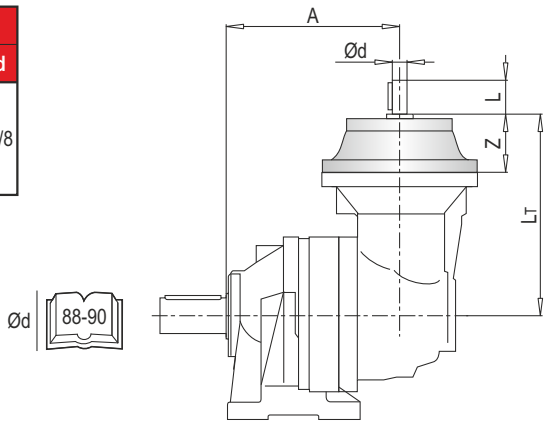

PL	~ Kg MS
1601	16
1602	22
1603	28
1604	34

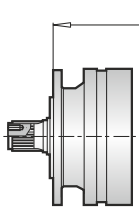

PL	~ Kg MC
1601	16
1602	22
1603	28
1604	34

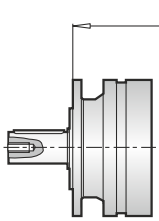

PL	~ Kg PS
1601	18
1602	24
1603	30
1604	36

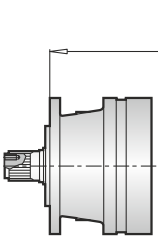

PL	~ Kg PC
1601	18
1602	24
1603	30
1604	36

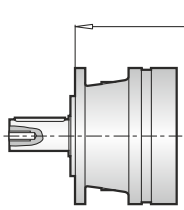

PL	~ Kg F
1601	14
1602	20
1603	26
1604	32

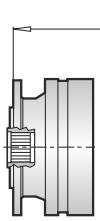

PL	~ Kg FS
1601	17
1602	23
1603	29
1604	35

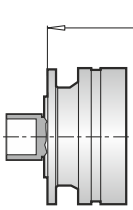

PL	~ Kg CPC
1601	21
1602	27
1603	33
1604	39

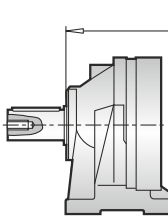

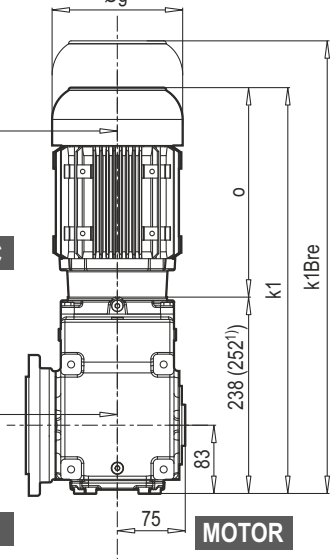

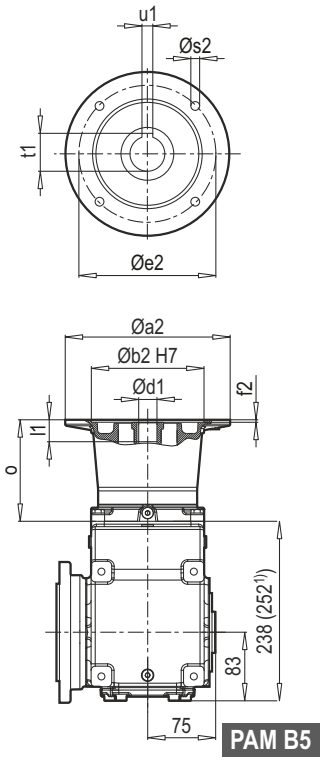

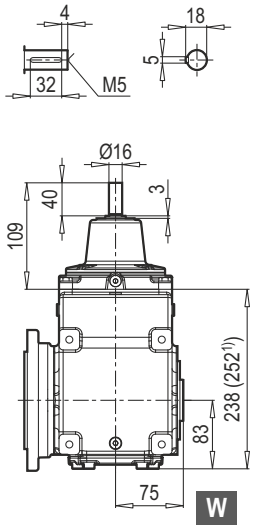

W ~ Kg	
PKD C 1290	18

PL	L						
	MS	MC	PS	PC	F	FS	CPC
1601	272	272	302	302	272	272	309
1602	320	320	350	350	320	320	357
1603	368	368	398	398	368	368	405
1604	416	416	446	446	416	416	453

	MOTOR	g	g1	k1	k1Bre	o
PKD C 1290	63 M	124	111	436	488	198
	71 M	140	119	465	525	227
	80 M	159	127	492	554	254
	90 S	193	151	532	605	280
	90 L	193	151	552	625	300
	100 L	217	160	563	644	311

~ Kg	
MOTOR	PKD C 1290
63 M	20
71 M	26
80 M	27
90 S	30
90 L	32
100 L	43

	PAM B5	Øa2	Øb2	Øe2	f2	Øs2	Ød1	l1	t1	u1	o
PKD C 1290	63	140	95	115	3.5	M8	11	23	12.8	4	85
	71	160	110	130	4.0	M8	14	30	16.3	5	85
	80	200	130	165	4.0	M10	19	40	21.8	6	103
	90	200	130	165	4.0	M10	24	50	27.3	8	103
	100	250	180	215	5.0	M12	28	60	31.3	8	126

~ Kg	
PAM B5	PKD C 1290
63	18
71	19
80	21
90	21
100	26

AKSESUARLAR / ACCESSORIES / ZUBEHÖR / ACCESSORI / ACCESSOIRES / ACCESORIOS

YZ

Pinyon / Pinion / Ritzel / Pignoni / Pignon / Piñones

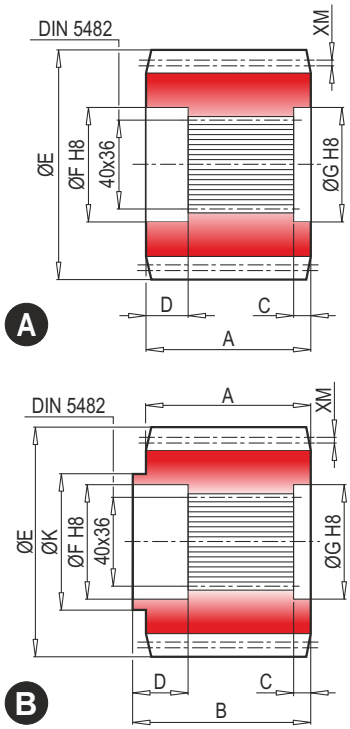

	Çıkış tipi Output type Abtriebs-version Versione Version Versión	M	Z	XM	A	B	C	D	E	F	G	K	Malzeme Material Material Materiale Matière Material	Kod Code Bestell-Nr. Codice Code Código
A	M..-P..	1.9	20	0.049	65	-	6	20.5	84.5	42	42	-	38NiCrMo4	1071.200.042
A	M..-P..	5	16	2.5	55	-	6	20.5	95	42	42	-	38NiCrMo4	1071.259.042
B	M..-P..	3.5	23	0	40	60.5	6	20.5	87.5	42	42	60	38NiCrMo4	1071.291.042

FF

Sabitleme rondelası / Stop bottom plate / Endscheibe / Fondello di arresto / Bouchon de fermeture / Tapón de detención

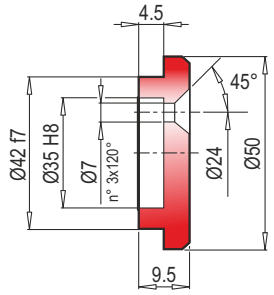

Kod / Code
Bestell - Nr. / Codice
Code / Código
1075.034.000

BS

Spline kaplin / Splined bushing / Innenverzahnte Buchse / Boccola scanalata / Moyeu cannelé / Casquillo ranurado

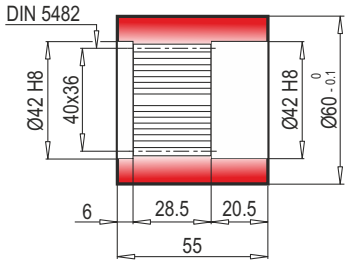

Malzeme / Material
Material / Materiale
Matière / Material
UNI C40
SAE 1040
DIN Ck40

Kod / Code
Bestell - Nr. / Codice
Code / Código
0171.100.076

KB

Spline mil / Splined rod / Außenverzahnte Welle / Barra scanalata / Arbre cannelé / Barra ranurada

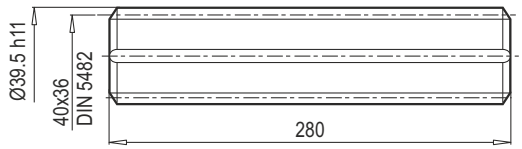

Malzeme / Material
Material / Materiale
Matière / Material

UNI 39NiCrMo3
Sertleşmiş ve tavlanmış / Hardened and tempered
Vergütet / Bonifié
Bonificado / Endurecido e temperado

Kod / Code
Bestell - Nr. / Codice
Code / Código
3071.179.042

FL

Flanş / Flange / Flansch / Flangia / Bride / Brida

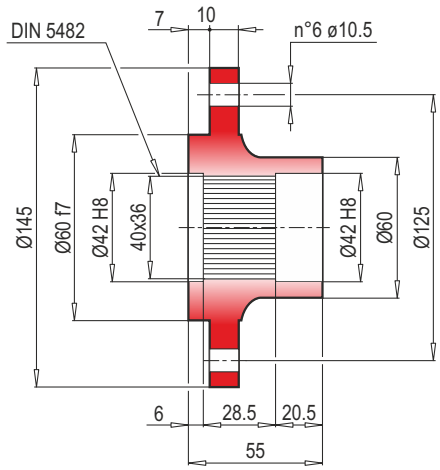

Kod / Code
Bestell - Nr. / Codice
Code / Código
0171.102.025

GA

Konik sıktırma / Shrink disc / Schrumpfscheibe / Giunto di attrito / Frette de serrage / Disco de contracción

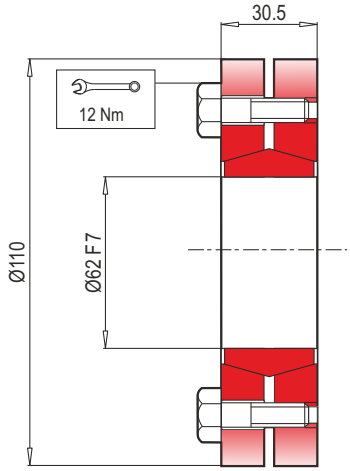

Maksimum moment
Max. torque
Max. Drehmoment
Coppia max.
Couple max.
Momento máx.
2.2 kNm

Kod / Code
Bestell - Nr. / Codice
Code / Código
5109.062.000

TR RADYAL YÜKLER (Fr)

Aşağıdaki grafikler istenilen $n_2$xh değerinin elde edilmesi için gerekli olan radyal yükleri ve K faktörlerini göstermektedir.

EN RADIAL LOADS (Fr)

The following curves show the radial loads and the K factors to obtain the required n2xh value.

DE RADIALLAST (Fr)

In den nachstehenden Diagrammen ist die Radiallast un der Koeffizient K dargestellt und kann mit dem gewünschten Wert $n_2$xh verglichen werden.

IT CARICHI RADIALI (Fr)

Nei diagrammi seguenti sono riportati i carichi radiali e i coefficienti K per rapportarli al valore $n_2$xh desiderato.

FR CHARGES RADIALES (Fr)

Dans les diagrammes suivants sont indiqués les charges radiales et les facteurs K de façon à obtenir la valeur $n_2$xh désirée.

ES CARGAS RADIALES (Fr)

En los siguientes diagramas se indican las cargas radiales y los coefici - entes K para obtener el valor requerido $n_2$xh.

M - P - CPC*

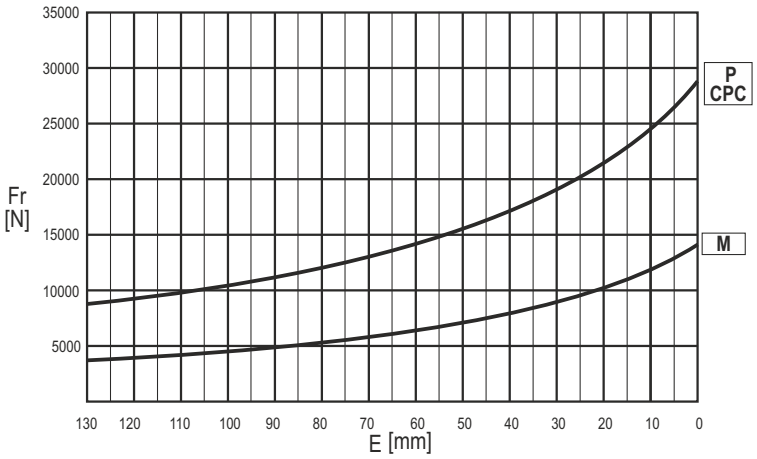

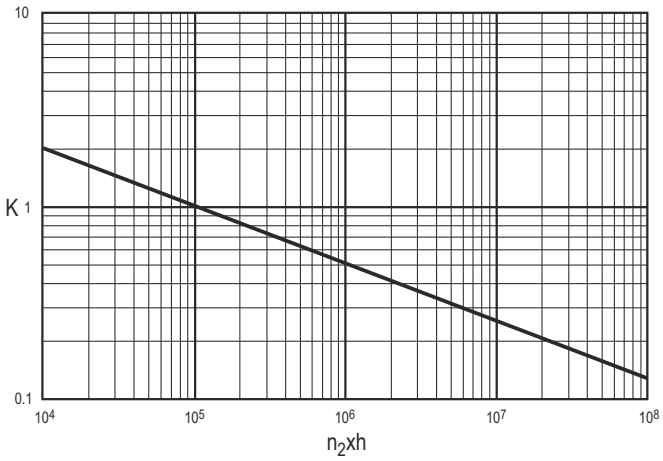

	n x h				
	10^5	10^4	10^6	10^7	10^8
M - P	Fr	Fr • K			
CPC*	Fr • 0.75	Fr • K • 0.75			

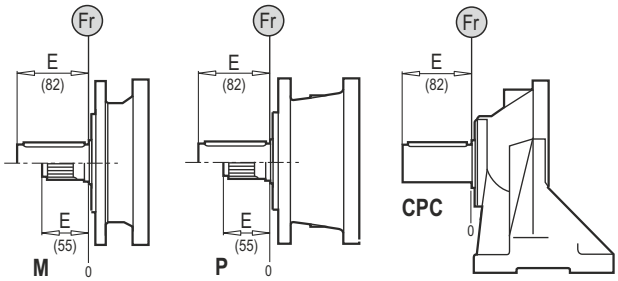

TR EKSENEL YÜKLER (Fa)

Tabloda yer alan eksenel yük değerleri, çıkış tipine ve uygulamanın yük yönüne göre değişir.

EN AXIAL LOADS (Fa)

The values of the axial loads in the table refer to the output versions and load direction of application.

DE AXIALLAST (Fa)

Die dargestellten Werte der Axiallast basieren auf der Version und der applizierten Lastrichtung.

IT CARICHI ASSIALI (Fa)

I valori dei carichi assiali indicati in tabella sono riferiti alle versioni e alla direzione di applicazione del carico.

FR CHARGES AXIALES (Fa)

Les valeurs des charges axiales indiquées dans le tableau se réfèrent aux versions et à la direction d'application de lacharge.

ES CARGAS AXIALES (Fa)

Los valores de las cargas axiales indicados en la tabla se refieren a las versiones y a la dirección de aplicación de la carga.

Fa [N]	M	P - CPC	
	16000	18000	←
	16000	18000	→

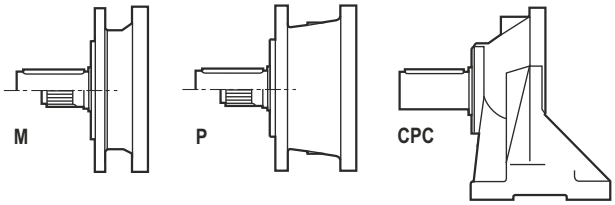

TEKNİK VERİLER / TECHNICAL DATA / TECHNISCHE DATEN / DATI TECNICI / DONNÉES TECHNIQUES / DATOS TÉCNICAS

	i_{ges}	M_2max (n1: 1400rpm) (Nm)
2501	3.78 ... 7.25	1470
2502	13.4 ... 62.8	1920
2503	52.1 ... 424.1	2580
2504	352.0 ... 2369.2	3660

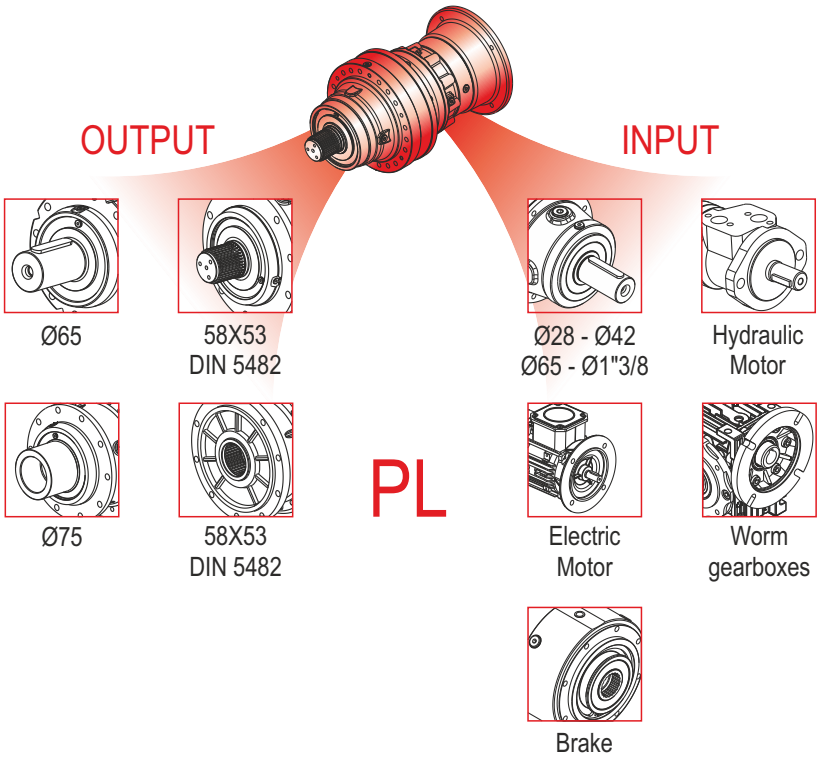

	i_{ges}	M_2max (n1: 1400rpm) (Nm)
2502	12.1 ... 21.3	1640
2503	39.4 ... 143.5	2320
2504	140.1 ... 1244.1	3160

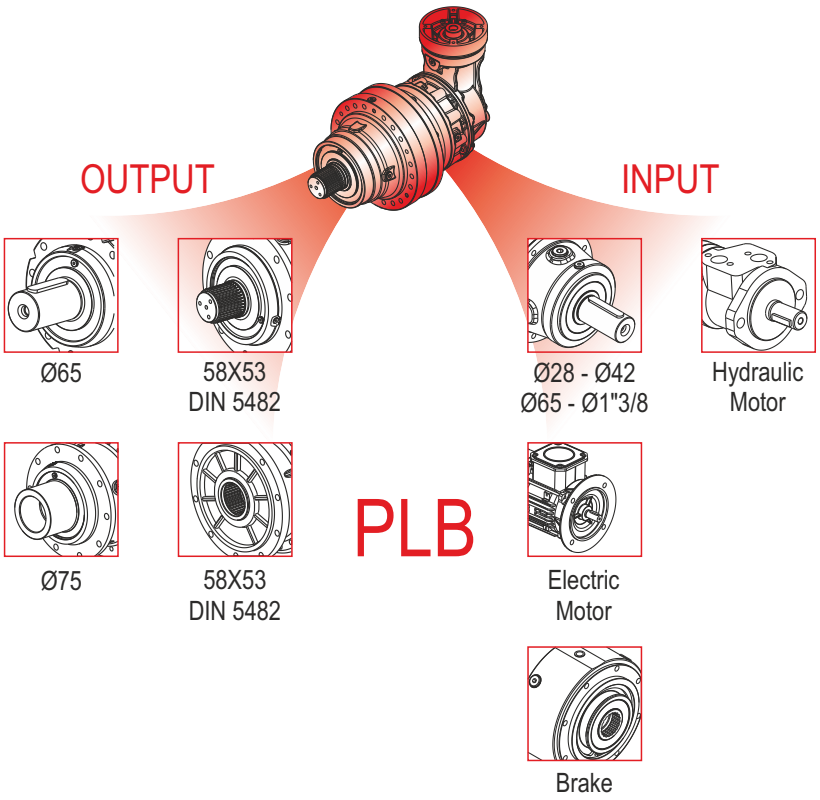

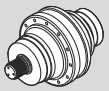	Pt [kW]	n_{1max} [min^{-1}]	i_{ges}	Mc [kNm] n_2 x h 10.000	n_2 x h 20.000	n_2 x h 50.000	n_2 x h 100.000	Giriş- Input - Antrieb - Entrata - Entrée - Entrada IEC (B5)	PMRV / PRV	EL - EML EM - EP - ET
PL 2501	20	2800	3.78 4.13 5.17 6.00 7.25	4.06 3.67 3.07 2.57 1.99	3.59 3.25 2.71 2.27 1.76	3.06 2.76 2.31 1.94 1.50	2.70 2.45 2.04 1.71 1.33	63 71 80 90 100 112 132 160 180	050 063 075 090 110 130	EL C 28 EL C 42 EML 42 EML 1"3/8 Z6 EM 65 EM 1"3/8 Z6 EP 65
PL 2502	12	2800	13.4 16.2 18.4 23.1 28.9 34.9 40.5 48.9 62.8	4.06 4.06 3.07 3.67 3.07 3.07 2.57 1.99 1.99	3.59 3.59 2.71 3.25 2.71 2.71 2.27 1.76 1.76	3.06 3.06 2.31 2.76 2.31 2.31 1.94 1.50 1.50	2.70 2.70 2.04 2.45 2.04 2.04 1.71 1.33 1.33	63 71 80 90 100 112 132 160	050 063 075 090	EL C 28 EL C 42 EML 42 EML 1"3/8 Z6
PL 2503	8	2800	52.1 57.6 62.9 75.2 82.1 90.7 99.0 119.3 129.4 149.5 155.9 162.0 173.6 195.3 235.4 273.4 302.2 330.3 424.1	3.67 4.06 3.67 4.06 3.67 4.06 3.67 3.67 3.67 3.07 3.67 3.07 2.57 3.07 3.07 2.57 3.07 1.99 1.99	3.25 3.59 3.25 3.59 3.25 3.59 3.25 3.25 3.25 2.71 3.25 2.71 2.27 2.71 2.71 2.27 2.71 1.76 1.76	2.76 3.06 2.76 3.06 2.76 3.06 2.76 2.76 2.76 2.31 2.76 2.31 1.94 2.31 2.31 1.94 2.31 1.50 1.50	2.45 2.70 2.45 2.70 2.45 2.70 2.45 2.45 2.45 2.04 2.45 2.04 1.71 2.04 2.04 1.71 2.04 1.33 1.33	63 71 80 90 100 112 132	050 063 075 090	EL C 28 EL C 42 EML 42 EML 1"3/8 Z6
PL 2504	4	2800	352.0 365.8 388.6 413.9 424.3 468.4 511.4 554.4 612.0 668.2 737.7 805.5 858.0 907.3 1052.5 1121.1 1318.3 1589.0 1845.3 2369.2	3.67 3.07 4.06 4.06 3.67 4.06 3.67 3.67 4.06 3.67 4.06 3.67 3.67 3.07 3.67 3.67 3.07 3.07 2.57 2.57	3.25 2.71 3.59 3.59 3.25 3.59 3.25 3.25 3.59 3.25 3.59 3.25 3.25 2.71 3.25 3.25 2.71 2.71 2.27 2.27	2.76 2.31 3.06 3.06 2.76 3.06 2.76 2.76 3.06 2.76 3.06 2.76 2.76 2.31 2.76 2.76 2.31 2.31 1.94 1.94	2.45 2.04 2.70 2.70 2.45 2.70 2.45 2.45 2.70 2.45 2.70 2.45 2.45 2.04 2.45 2.45 2.04 2.04 1.71 1.71	63 71 80 90 100 112	050 063 075 090	EL C 28 EL C 42 EML 42 EML 1"3/8 Z6

	Pt [kW]	n_{1max} [min^{-1}]	i_{ges}	Mc [kNm]				Giriş- Input - Antrieb - Entrata - Entrée - Entrada	
				n_2 x h	n_2 x h	n_2 x h	n_2 x h		
				10.000	20.000	50.000	100.000	IEC (B5)	EL - EML EM - EP - ET
PLB 2502	12	2800	12.1 15.2 17.6 21.3	3.67 3.07 2.57 1.99	3.25 2.71 2.27 1.76	2.76 2.31 1.94 1.50	2.45 2.04 1.71 1.33	80 90 100 112 132 160	EL C 28 EL C 42 EML 42 EML 1"3/8 Z6 EM 65 EM 1"3/8 Z6 EP 65
PLB 2503	8	2800	39.4 47.5 53.9 67.8 75.4 84.9 91.1 102.3 118.8 143.5	4.06 4.06 3.07 3.67 2.57 3.07 1.99 3.07 2.57 1.99	3.59 3.59 2.71 3.25 2.27 2.71 1.76 2.71 2.27 1.76	3.06 3.06 2.31 2.76 1.94 2.31 1.50 2.31 1.94 1.50	2.70 2.70 2.04 2.45 1.71 2.04 1.33 2.04 1.71 1.33	80 90 100 112 132	EL C 28 EL C 42 EML 42 EML 1"3/8 Z6 EM 65 EM 1"3/8 Z6 EP 65
PLB 2504	4	2800	140.1 168.9 184.4 220.6 240.9 265.9 290.4 320.6 350.0 422.4 449.4 475.3 509.1 551.9 615.2 665.3 735.5 801.9 1244.1	4.06 4.06 3.67 4.06 3.67 4.06 3.67 4.06 3.67 2.57 3.67 3.07 2.57 2.57 1.99 2.57 3.07 2.57 1.99	3.59 3.59 3.25 3.59 3.25 3.59 3.25 3.59 3.25 2.27 3.25 2.71 2.27 2.27 1.76 2.27 2.71 2.27 1.76	3.06 3.06 2.76 3.06 3.78 3.06 2.76 3.06 2.76 1.94 2.76 2.31 1.94 1.94 1.50 1.94 2.31 1.94 1.50	2.70 2.70 2.45 2.70 2.45 2.70 2.45 2.70 2.45 1.71 2.45 2.04 1.71 1.71 1.33 1.71 2.04 1.71 1.33	80 90 100 112	EL C 28 EL C 42 EML 42 EML 1"3/8 Z6 EM 65 EM 1"3/8 Z6 EP 65

(n_2 x h = 20.000)

$$M_{max} = M_c \times 2$$

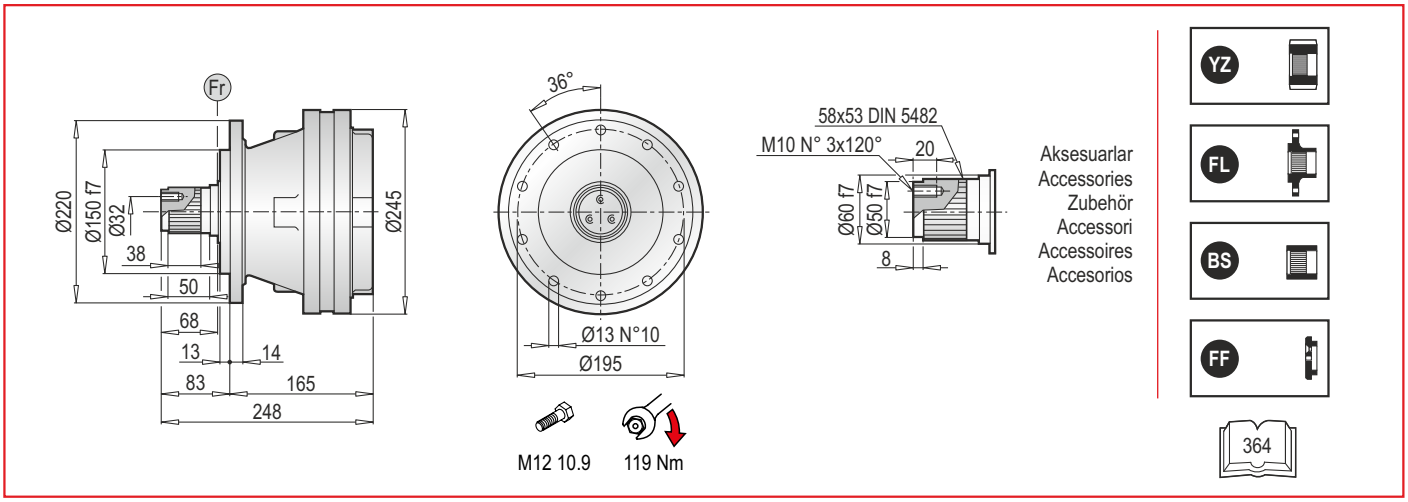

PL 2500 MS - Elektrik Motor Adaptörleri (IEC) / Electrıc Motor Couplings (IEC) / Anbauvorrichtung Für Elektromotore (IEC) / Predisposizioni Per Motori Elettrici (IEC) / Adaptations Pour Moteurs Electriques (IEC) / Acoplamientos Para Motores Eléctricos (IEC)

PL	IEC 63			IEC 71			IEC 80			IEC 90			IEC 100		
	LT	Z	ØD	LT	Z	ØD	LT	Z	ØD	LT	Z	ØD	LT	Z	ØD
2501	201	36	140	201	36	160	221	56	200	221	56	200	231	66	250
2502	249			249			269			269			279		
2503	297			297			317			317			327		
2504	345			345			365			365			375		

PL	IEC 112			IEC 132			IEC 160			IEC 180		
	LT	Z	ØD	LT	Z	ØD	LT	Z	ØD	LT	Z	ØD
2501	231	66	250	265	100	300	304	139	350	304	139	350
2502	279			313			352			-		
2503	327			361			-			-		
2504	375			-			-			-		

PL	IEC ~ Kg								
	63	71	80	90	100	112	132	160	180
2501	35	35	37	37	38	38	42	52	52
2502	41	41	43	43	44	44	48	58	-
2503	47	47	49	49	50	50	54	-	-
2504	53	53	55	55	56	56	-	-	-

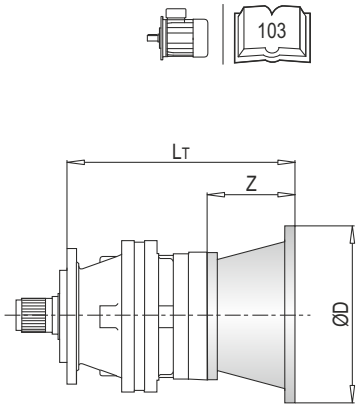

PL 2500 MS - Giriş Milleri / Input Shafts / Antriebswellen / Alberi Entrata / Arbres D'entree / Ejes De Entrada

PL	EL C 28				EL C 42				EML 42				EML 1"3/8 Z6				EM 65				EM 1"3/8 Z6			
	LT	Z	L	Ød	LT	Z	L	Ød	LT	Z	L	Ød	LT	Z	L	Ød	LT	Z	L	Ød	LT	Z	L	Ød
2501	229	64	50	28	229	64	82	42	259	94	82	42	259	94	106	1"3/8	300	121.5	105	65	300	121.5	105	1"3/8
2502	277				277				307				307				-				-			
2503	325				325				355				355				-				-			
2504	373				373				403				403				-				-			

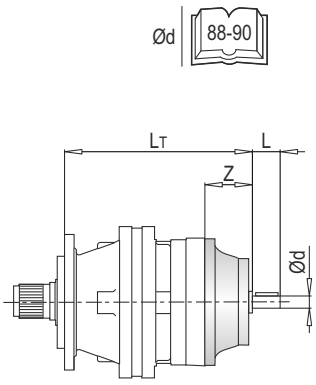

PL	EP 65			
	LT	Z	L	Ød
2501	331.5	153	105	65
2502	-			
2503	-			
2504	-			

PL	~ Kg						
	EL C 28	EL C 42	EML 42	EML 1"3/8 Z6	EM 65	EM 1"3/8 Z6	EP 65
2501	35.5	36.0	39.0	39.0	47.0	47.0	56.0
2502	41.5	42.0	45.0	45.0	-	-	-
2503	47.5	48.0	51.0	51.0	-	-	-
2504	53.5	54.0	57.0	57.0	-	-	-

PL 2500 MS - Sonsuz Dişlili Redüktör Adaptörleri (PMRV/PRV) / Worm Gearbox Adaptors (PMRV/PRV) / Anschluss Für Schneckengetriebe (PMRV/PRV) / Predisposizioni Per Riduttori A Vite Senza Fine (PMRV/PRV) / Adaptation Pour Reducteurs A Vis Sans Fin (PMRV/PRV) / Acoplamiento Para Reductores De Tornillo Sin Fin (PMRV/PRV)

PL	PMRV/PRV 050					PMRV/PRV 063					PMRV/PRV 075				
	LM	l	h	MA	G	LM	l	h	MA	G	LM	l	h	MA	G
2501	290.5	50	110	60	80	300	63	135	72	95	279	75	161	86	112.5
2502	338.5					348					327				
2503	386.5					396					375				
2504	434.5					444					423				

PL	PMRV/PRV 090					PMRV/PRV 110					PMRV/PRV 130				
	LM	l	h	MA	G	LM	l	h	MA	G	LM	l	h	MA	G
2501	289	90	193	103	129.5	316.5	110	237.5	127.5	160	324	130	277.5	147.5	180
2502	337					-					-				
2503	385					-					-				
2504	433					-					-				

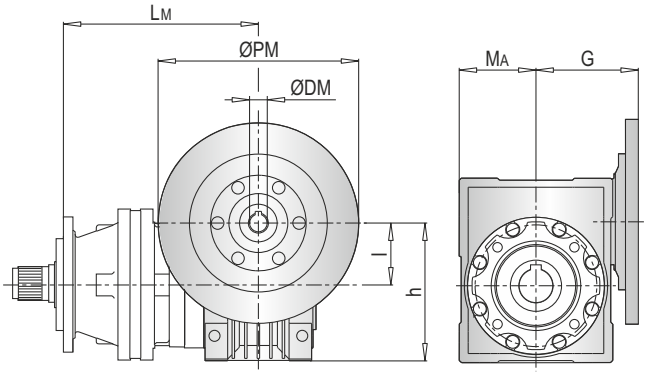

ØPM
ØDM
105

PL	PMRV/PRV ~ Kg					
	050	063	075	090	110	130
2501	38	41.5	44	49	76	93
2502	44	47.5	50	55	-	-
2503	50	53.5	56	61	-	-
2504	56	59.5	62	67	-	-

PLB 2500 MS - Elektrik Motor Adaptörleri (IEC) / Electric Motor Couplings (IEC) / Anbauvorrichtung Für Elektromotore (IEC) / Predisposizioni Per Motori Elettrici (IEC) / Adaptations Pour Moteurs Electriques (IEC) / Acoplamientos Para Motores Eléctricos (IEC)

PLB	IEC 80				IEC 90				IEC 100				IEC 112			
	A	LT	Z	ØD	A	LT	Z	ØD	A	LT	Z	ØD	A	LT	Z	ØD
2502	240	216	56	200	240	216	56	200	240	226	66	250	240	226	66	250
2503	288				288				288				288			
2504	336				336				-				-			

PLB	IEC 132				IEC 160			
	A	LT	Z	ØD	A	LT	Z	ØD
2502	240	260	100	300	240	299	139	350
2503	288				-			
2504	-				-			

PLB	IEC ~ Kg					
	80	90	100	112	132	160
2502	55	55	56	56	60	70
2503	61	61	62	62	66	-
2504	67	67	-	-	-	-

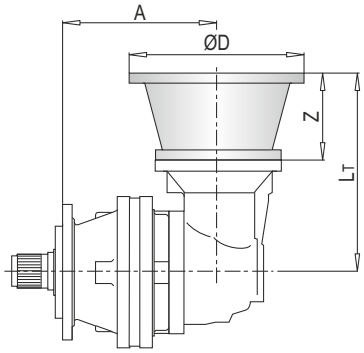

103

PLB2500 MS - Giriş Milleri / Input Shafts / Antriebswellen / Alberi Entrata / Arbres D'entree / Ejes De Entrada

PLB	EL C 28					EL C 42					EML 42					EML 1"3/8 Z6					EM 65				
	A	LT	Z	L	Ød	A	LT	Z	L	Ød	A	LT	Z	L	Ød	A	LT	Z	L	Ød	A	LT	Z	L	Ød
2502	240	224	64	50	28	240	224	64	82	42	240	254	94	82	42	240	254	94	106	1"3/8	240	297.5	121.5	105	65
2503	288					288					288					288					288				
2504	336					336					336					336					336				

PLB	EM 1"3/8 Z6					EP 65				
	A	LT	Z	L	Ød	A	LT	Z	L	Ød
2502	240	297.5	121.5	105	1"3/8	240	329	153	105	65
2503	288					288				
2504	336					336				

PLB	~ Kg						
	EL C 28	EL C 42	EML 42	EML 1"3/8 Z6	EM 65	EM 1"3/8 Z6	EP 65
2502	53.5	54.0	57.0	57.0	65.0	65.0	74.0
2503	59.5	60.0	63.0	63.0	71.0	71.0	80.0
2504	65.5	66.0	69.0	69.0	77.0	77.0	86.0

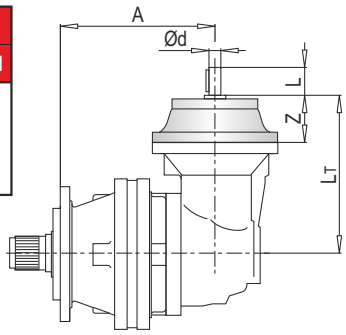

Ød
88-90

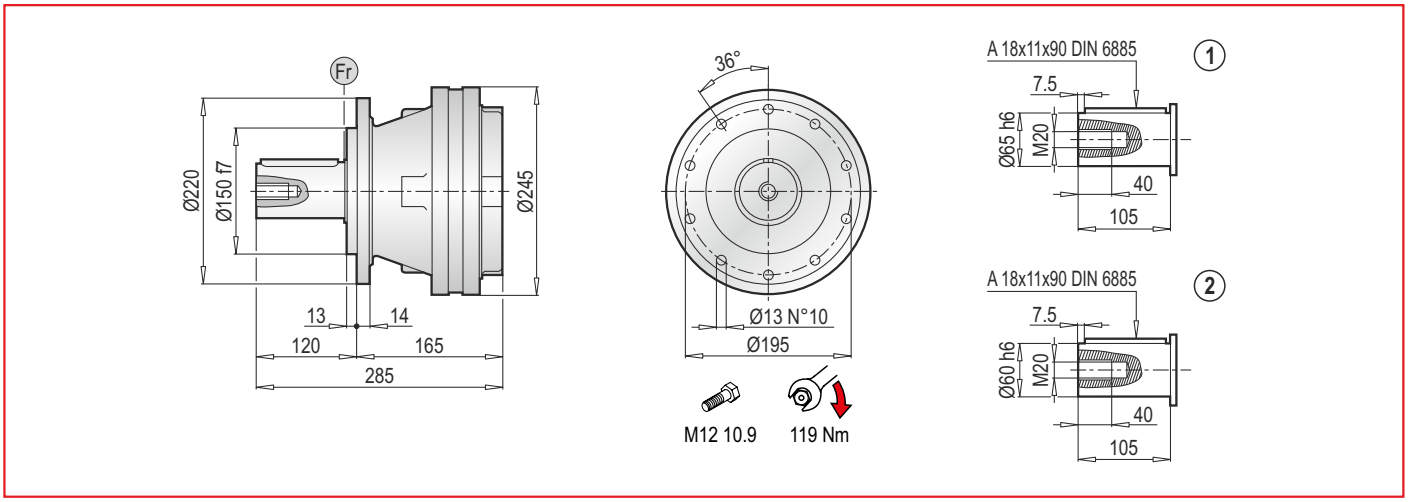

PL 2500 MC - Elektrik Motor Adaptörleri (IEC) / Electrıc Motor Couplings (IEC) / Anbauvorrichtung Für Elektromotore (IEC) / Predisposizioni Per Motori Elettrici (IEC) / Adaptations Pour Moteurs Electriques (IEC) / Acoplamientos Para Motores Eléctricos (IEC)

PL	IEC 63			IEC 71			IEC 80			IEC 90			IEC 100		
	LT	Z	ØD	LT	Z	ØD	LT	Z	ØD	LT	Z	ØD	LT	Z	ØD
2501	201	36	140	201	36	160	221	56	200	221	56	200	231	66	250
2502	249			249			269			269			279		
2503	297			297			317			317			327		
2504	345			345			365			365			375		

PL	IEC 112			IEC 132			IEC 160			IEC 180		
	LT	Z	ØD	LT	Z	ØD	LT	Z	ØD	LT	Z	ØD
2501	231	66	250	265	100	300	304	139	350	304	139	350
2502	279			313			352			-		
2503	327			361			-			-		
2504	375			-			-			-		

PL	IEC ~ Kg								
	63	71	80	90	100	112	132	160	180
2501	35	35	37	37	38	38	42	52	52
2502	41	41	43	43	44	44	48	58	-
2503	47	47	49	49	50	50	54	-	-
2504	53	53	55	55	56	56	-	-	-

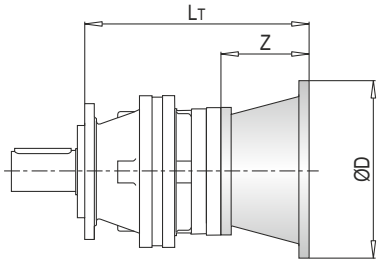

PL 2500 MC - Giriş Milleri / Input Shafts / Antriebswellen / Alberi Entrata / Arbres D'entree / Ejes De Entrada

PL	EL C 28				EL C 42				EML 42				EML 1"3/8 Z6				EM 65				EM 1"3/8 Z6			
	LT	Z	L	Ød	LT	Z	L	Ød	LT	Z	L	Ød	LT	Z	L	Ød	LT	Z	L	Ød	LT	Z	L	Ød
2501	229	64	50	28	229	64	82	42	259	94	82	42	259	94	106	1"3/8	300	121.5	105	65	300	121.5	105	1"3/8
2502	277				277				307				307				-				-			
2503	325				325				355				355				-				-			
2504	373				373				403				403				-				-			

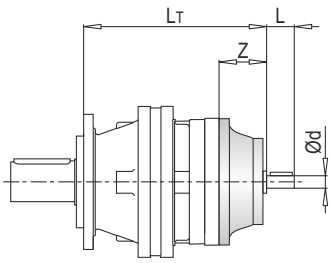

PL	EP 65			
	LT	Z	L	Ød
2501	331.5	153	105	65
2502	-			
2503	-			
2504	-			

PL	~ Kg						
	EL C 28	EL C 42	EML 42	EML 1"3/8 Z6	EM 65	EM 1"3/8 Z6	EP 65
2501	35.5	36.0	39.0	39.0	47.0	47.0	56.0
2502	41.5	42.0	45.0	45.0	-	-	-
2503	47.5	48.0	51.0	51.0	-	-	-
2504	53.5	54.0	57.0	57.0	-	-	-

PL 2500 MC - Sonsuz Dişlili Redüktör Adaptörleri (PMRV/PRV) / Worm Gearbox Adaptors (PMRV/PRV) / Anschluss Für Schneckengetriebe (PMRV/PRV) / Predisposizioni Per Riduttori A Vite Senza Fine (PMRV/PRV) / Adaptation Pour Reducteurs A Vis Sans Fin (PMRV/PRV) / Acoplamiento Para Reductores De Tornillo Sin Fin (PMRV/PRV)

PL	PMRV/PRV 050					PMRV/PRV 063					PMRV/PRV 075				
	LM	l	h	MA	G	LM	l	h	MA	G	LM	l	h	MA	G
2501	290.5	50	110	60	80	300	63	135	72	95	279	75	161	86	112.5
2502	338.5					348					327				
2503	386.5					396					375				
2504	434.5					444					423				

PL	PMRV/PRV 090					PMRV/PRV 110					PMRV/PRV 130				
	LM	l	h	MA	G	LM	l	h	MA	G	LM	l	h	MA	G
2501	289	90	193	103	129.5	316.5	110	237.5	127.5	160	324	130	277.5	147.5	180
2502	337					-					-				
2503	385					-					-				
2504	433					-					-				

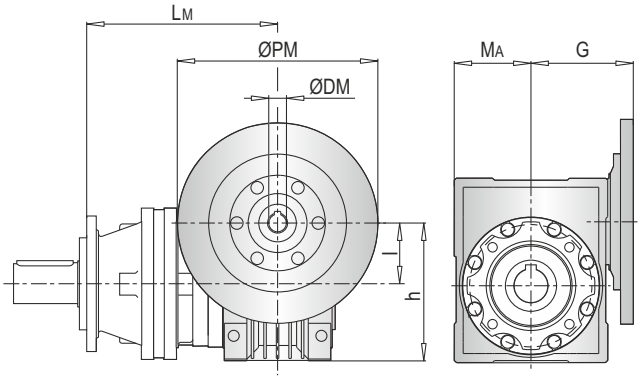

ØPM
ØDM
105

PL	PMRV/PRV ~ Kg					
	050	063	075	090	110	130
2501	38	41.5	44	49	76	93
2502	44	47.5	50	55	-	-
2503	50	53.5	56	61	-	-
2504	56	59.5	62	67	-	-

PLB 2500 MC - Elektrik Motor Adaptörleri (IEC) / Electric Motor Couplings (IEC) / Anbauvorrichtung Für Elektromotore (IEC) / Predisposizioni Per Motori Elettrici (IEC) / Adaptations Pour Moteurs Electriques (IEC) / Acoplamientos Para Motores Eléctricos (IEC)

PLB	IEC 80				IEC 90				IEC 100				IEC 112			
	A	LT	Z	ØD	A	LT	Z	ØD	A	LT	Z	ØD	A	LT	Z	ØD
2502	240	216	56	200	240	216	56	200	240	226	66	250	240	226	66	250
2503	288				288				288				288			
2504	336				336				336				336			

PLB	IEC 132				IEC 160			
	A	LT	Z	ØD	A	LT	Z	ØD
2502	240	260	100	300	240	299	139	350
2503	288				-			
2504	-				-			

PLB	IEC ~ Kg					
	80	90	100	112	132	160
2502	55	55	56	56	60	70
2503	61	61	62	62	66	-
2504	67	67	68	68	-	-

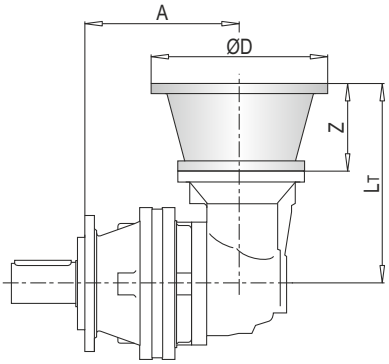

103

PLB 2500 MC - Giriş Milleri / Input Shafts / Antriebswellen / Alberi Entrata / Arbres D'entree / Ejes De Entrada

PLB	EL C 28					EL C 42					EML 42					EML 1"3/8 Z6					EM 65				
	A	LT	Z	L	Ød	A	LT	Z	L	Ød	A	LT	Z	L	Ød	A	LT	Z	L	Ød	A	LT	Z	L	Ød
2502	240	224	64	50	28	240	224	64	82	42	240	254	94	82	42	240	254	94	106	1"3/8	240	297.5	121.5	105	65
2503	288					288					288					288					288				
2504	336					336					336					336					336				

PLB	EM 1"3/8 Z6					EP 65				
	A	LT	Z	L	Ød	A	LT	Z	L	Ød
2502	240	297.5	121.5	105	1"3/8	240	329	153	105	65
2503	288					288				
2504	336					336				

PLB	~ Kg						
	EL C 28	EL C 42	EML 42	EML 1"3/8 Z6	EM 65	EM 1"3/8 Z6	EP 65
2502	53.5	54.0	57.0	57.0	65.0	65.0	74.0
2503	59.5	60.0	63.0	63.0	71.0	71.0	80.0
2504	65.5	66.0	69.0	69.0	77.0	77.0	86.0

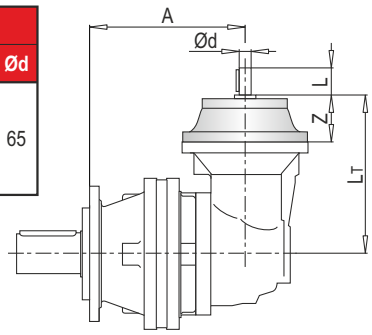

Ød
88-90

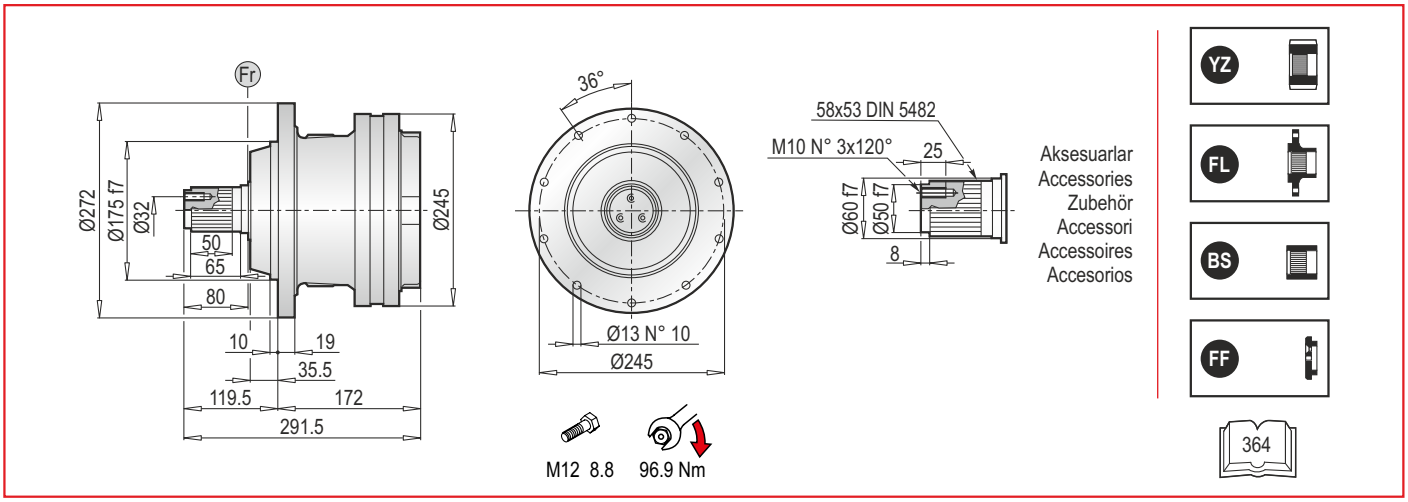

PL 2500 PS - Elektrik Motor Adaptörleri (IEC) / Electric Motor Couplings (IEC) / Anbauvorrichtung Für Elektromotore (IEC) / Predisposizioni Per Motori Elettrici (IEC) / Adaptations Pour Moteurs Electriques (IEC) / Acoplamientos Para Motores Eléctricos (IEC)

PL	IEC 63			IEC 71			IEC 80			IEC 90			IEC 100		
	LT	Z	ØD	LT	Z	ØD	LT	Z	ØD	LT	Z	ØD	LT	Z	ØD
2501	208	36	140	208	36	160	228	56	200	228	56	200	238	66	250
2502	256			256			276			276			286		
2503	304			304			324			324			334		
2504	352			352			372			372			382		

PL	IEC 112			IEC 132			IEC 160			IEC 180		
	LT	Z	ØD	LT	Z	ØD	LT	Z	ØD	LT	Z	ØD
2501	238	66	250	272	100	300	311	139	350	311	139	350
2502	286			320			359			-		
2503	334			368			-			-		
2504	382			-			-			-		

PL	IEC ~ Kg								
	63	71	80	90	100	112	132	160	180
2501	44	44	46	46	47	47	51	61	61
2502	50	50	52	52	53	53	57	67	-
2503	56	56	58	58	59	59	63	-	-
2504	62	62	64	64	65	65	-	-	-

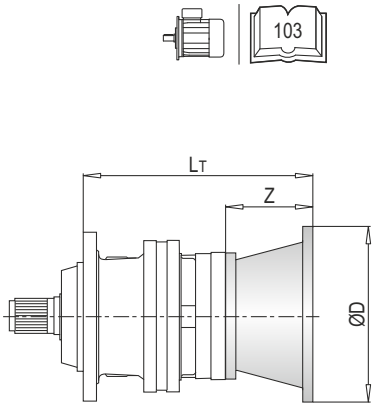

PL 2500 PS - Giriş Milleri / Input Shafts / Antriebswellen / Alberi Entrata / Arbres D'entree / Ejes De Entrada

PL	EL C 28				EL C 42				EML 42				EML 1"3/8 Z6				EM 65				EM 1"3/8 Z6			
	LT	Z	L	Ød	LT	Z	L	Ød	LT	Z	L	Ød	LT	Z	L	Ød	LT	Z	L	Ød	LT	Z	L	Ød
2501	236	64	50	28	236	64	82	42	266	94	82	42	266	94	106	1"3/8	307	121.5	105	65	307	121.5	105	1"3/8
2502	284				284				314				314				-				-			
2503	332				332				362				362				-				-			
2504	380				380				410				410				-				-			

PL	EP 65			
	LT	Z	L	Ød
2501	338.5	153	105	65
2502	-			
2503	-			
2504	-			

PL	~ Kg						
	EL C 28	EL C 42	EML 42	EML 1"3/8 Z6	EM 65	EM 1"3/8 Z6	EP 65
2501	35.5	36.0	39.0	39.0	47.0	47.0	56.0
2502	41.5	42.0	45.0	45.0	-	-	-
2503	47.5	48.0	51.0	51.0	-	-	-
2504	53.5	54.0	57.0	57.0	-	-	-

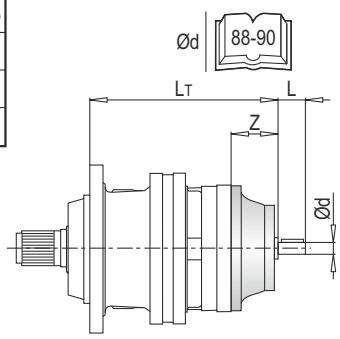

PL 2500 PS - Sonsuz Dişlili Redüktör Adaptörleri (PMRV/PRV) / Worm Gearbox Adaptors (PMRV/PRV) / Anschluss Für Schneckengetriebe (PMRV/PRV) / Predisposizioni Per Riduttori A Vite Senza Fine (PMRV/PRV) / Adaptation Pour Reducteurs A Vis Sans Fin (PMRV/PRV) / Acoplamiento Para Reductores De Tornillo Sin Fin (PMRV/PRV)

PL	PMRV/PRV 050					PMRV/PRV 063					PMRV/PRV 075				
	LM	l	h	MA	G	LM	l	h	MA	G	LM	l	h	MA	G
2501	297.5	50	110	60	80	307	63	135	72	95	286	75	161	86	112.5
2502	345.5					355					334				
2503	393.5					403					382				
2504	441.5					451					430				

PL	PMRV/PRV 090					PMRV/PRV 110					PMRV/PRV 130				
	LM	l	h	MA	G	LM	l	h	MA	G	LM	l	h	MA	G
2501	296	90	193	103	129.5	323.5	110	237.5	127.5	160	331	130	277.5	147.5	180
2502	344					-					-				
2503	392					-					-				
2504	440					-					-				

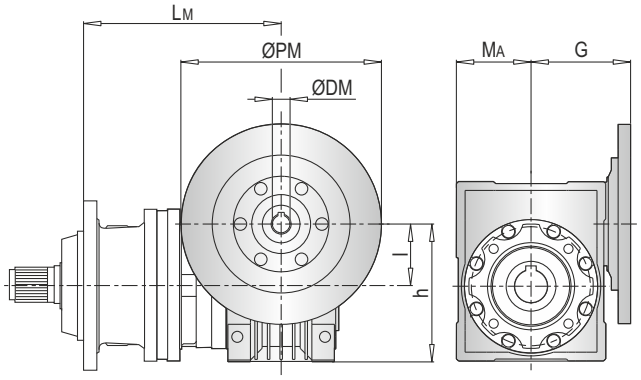

PL	PMRV/PRV ~ Kg					
	050	063	075	090	110	130
2501	47	50.5	53	58	85	102
2502	53	56.5	59	64	-	-
2503	59	62.5	65	70	-	-
2504	65	68.5	71	76	-	-

PLB 2500 PS - Elektrik Motor Adaptöleri (IEC) / Electric Motor Couplings (IEC) / Anbauvorrichtung Für Elektromotore (IEC) / Predisposizioni Per Motori Elettrici (IEC) / Adaptations Pour Moteurs Electriques (IEC) / Acoplamientos Para Motores Eléctricos (IEC)

PLB	IEC 80				IEC 90				IEC 100				IEC 112			
	A	LT	Z	ØD	A	LT	Z	ØD	A	LT	Z	ØD	A	LT	Z	ØD
2502	247	216	56	200	247	216	56	200	247	226	66	250	247	226	66	250
2503	295				295				295				295			
2504	343				343				343				343			

PLB	IEC 132				IEC 160			
	A	LT	Z	ØD	A	LT	Z	ØD
2502	247	260	100	300	247	299	139	350
2503	295				295	-		
2504	343				343	-		

PLB	IEC ~ Kg					
	80	90	100	112	132	160
2502	64	64	65	65	69	79
2503	70	70	71	71	75	-
2504	76	76	77	77	-	-

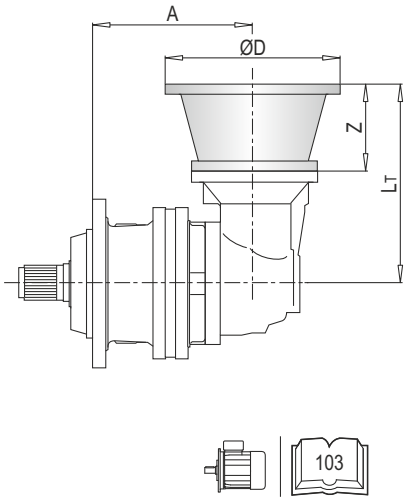

PLB 2500 PS - Giriş Milleri / Input Shafts / Antriebswellen / Alberi Entrata / Arbres D'entree / Ejes De Entrada

PLB	EL C 28					EL C 42					EML 42					EML 1"3/8 Z6					EM 65				
	A	LT	Z	L	Ød	A	LT	Z	L	Ød	A	LT	Z	L	Ød	A	LT	Z	L	Ød	A	LT	Z	L	Ød
2502	247	224	64	50	28	247	224	64	82	42	247	254	94	82	42	247	254	94	106	1"3/8	247	297.5	121.5	105	65
2503	295					295					295					295					295				
2504	343					343					343					343					343				

PLB	EM 1"3/8 Z6					EP 65				
	A	LT	Z	L	Ød	A	LT	Z	L	Ød
2502	247	297.5	121.5	105	1"3/8	247	329	153	105	65
2503	295					295				
2504	343					343				

PLB	~ Kg						
	EL C 28	EL C 42	EML 42	EML 1"3/8 Z6	EM 65	EM 1"3/8 Z6	EP 65
2502	62.5	63.0	66.0	66.0	74.0	74.0	83.0
2503	68.5	69.0	72.0	72.0	80.0	80.0	89.0
2504	74.5	75.0	78.0	78.0	86.0	86.0	95.0

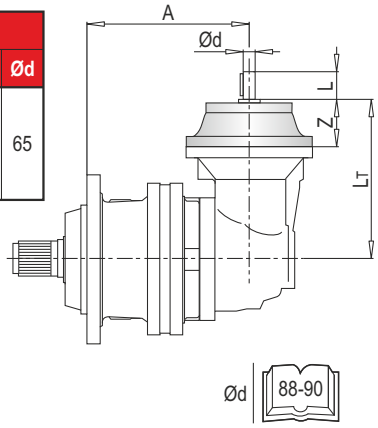

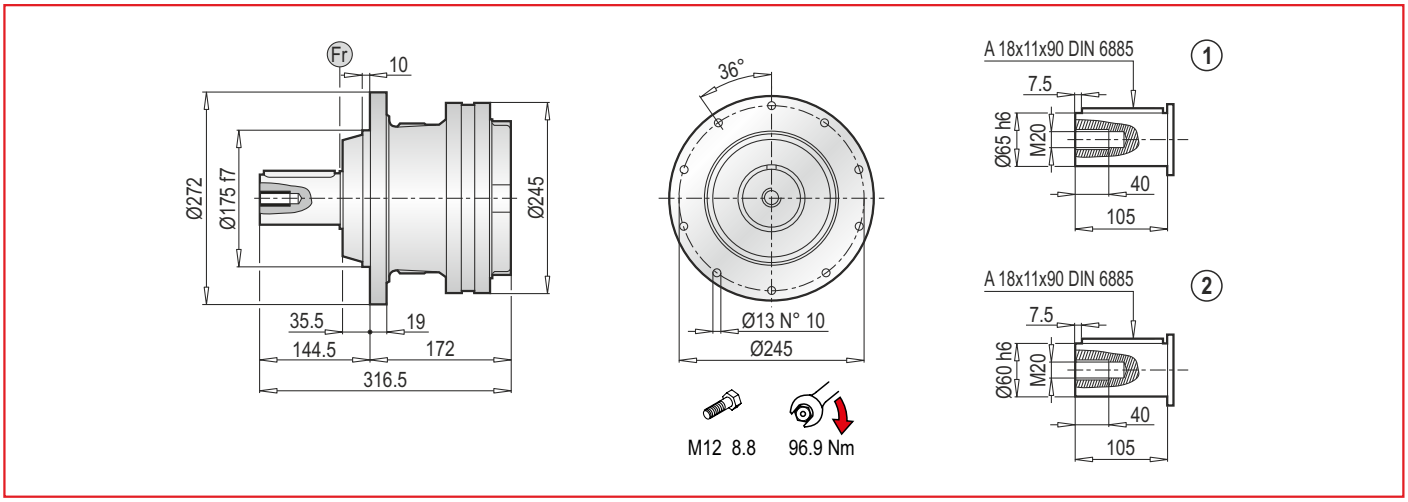

PL 2500 PC - Elektrik Motor Adaptörleri (IEC) / Electrıc Motor Couplings (IEC) / Anbauvorrichtung Für Elektromotore (IEC) / Predisposizioni Per Motori Elettrici (IEC) / Adaptations Pour Moteurs Electriques (IEC) / Acoplamientos Para Motores Eléctricos (IEC)

PL	IEC 63			IEC 71			IEC 80			IEC 90			IEC 100		
	LT	Z	ØD	LT	Z	ØD	LT	Z	ØD	LT	Z	ØD	LT	Z	ØD
2501	208	36	140	208	36	160	228	56	200	228	56	200	238	66	250
2502	256			256			276			276			286		
2503	304			304			324			324			334		
2504	352			352			372			372			382		

PL	IEC 112			IEC 132			IEC 160			IEC 180		
	LT	Z	ØD	LT	Z	ØD	LT	Z	ØD	LT	Z	ØD
2501	238	66	250	272	100	300	311	139	350	311	139	350
2502	286			320			359			-		
2503	334			368			-			-		
2504	382			-			-			-		

PL	IEC ~ Kg								
	63	71	80	90	100	112	132	160	180
2501	44	44	46	46	47	47	51	61	61
2502	50	50	52	52	53	53	57	67	-
2503	56	56	58	58	59	59	63	-	-
2504	62	62	64	64	65	65	-	-	-

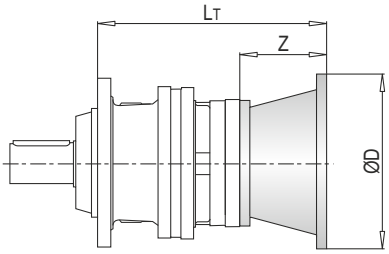

PL 2500 PC - Giriş Milleri / Input Shafts / Antriebswellen / Alberi Entrata / Arbres D'entree / Ejes De Entrada

PL	EL C 28				EL C 42				EML 42				EML 1"3/8 Z6				EM 65				EM 1"3/8 Z6			
	LT	Z	L	Ød	LT	Z	L	Ød	LT	Z	L	Ød	LT	Z	L	Ød	LT	Z	L	Ød	LT	Z	L	Ød
2501	236	64	50	28	236	64	82	42	266	94	82	42	266	94	106	1"3/8	307	121.5	105	65	307	121.5	105	1"3/8
2502	284				284				314				314				-				-			
2503	332				332				362				362				-				-			
2504	380				380				410				410				-				-			

PL	EP 65			
	LT	Z	L	Ød
2501	338.5	153	105	65
2502	-			
2503	-			
2504	-			

PL	~ Kg						
	EL C 28	EL C 42	EML 42	EML 1"3/8 Z6	EM 65	EM 1"3/8 Z6	EP 65
2501	35.5	36.0	39.0	39.0	47.0	47.0	56.0
2502	41.5	42.0	45.0	45.0	-	-	-
2503	47.5	48.0	51.0	51.0	-	-	-
2504	53.5	54.0	57.0	57.0	-	-	-

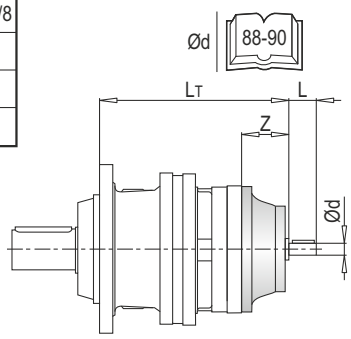

PL 2500 PC - Sonsuz Dişlili Redüktör Adaptörleri (PMRV/PRV) / Worm Gearbox Adaptors (PMRV/PRV) / Anschluss Für Schneckengetriebe (PMRV/PRV) / Predisposizioni Per Riduttori A Vite Senza Fine (PMRV/PRV) / Adaptation Pour Reducteurs A Vis Sans Fin (PMRV/PRV) / Acoplamiento Para Reductores De Tornillo Sin Fin (PMRV/PRV)

PL	PMRV/PRV 050					PMRV/PRV 063					PMRV/PRV 075				
	LM	l	h	MA	G	LM	l	h	MA	G	LM	l	h	MA	G
2501	297.5	50	110	60	80	307	63	135	72	95	286	75	161	86	112.5
2502	345.5					355					334				
2503	393.5					403					382				
2504	441.5					451					430				

PL	PMRV/PRV 090					PMRV/PRV 110					PMRV/PRV 130				
	LM	l	h	MA	G	LM	l	h	MA	G	LM	l	h	MA	G
2501	296	90	193	103	129.5	323.5	110	237.5	127.5	160	331	130	277.5	147.5	180
2502	344					-					-				
2503	392					-					-				
2504	440					-					-				

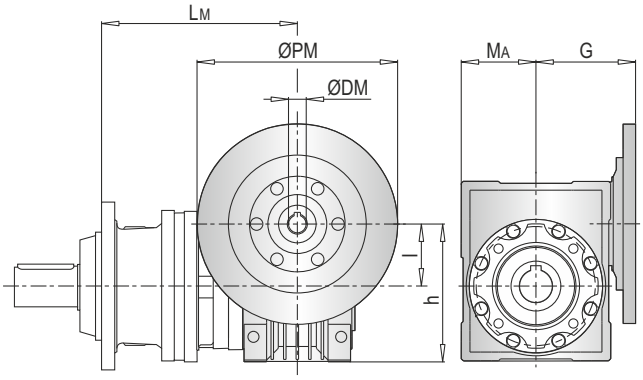

ØPM
ØDM
105

PL	PMRV/PRV ~ Kg					
	050	063	075	090	110	130
2501	47	50.5	53	58	85	102
2502	53	56.5	59	64	-	-
2503	59	62.5	65	70	-	-
2504	65	68.5	71	76	-	-

PLB 2500 PC - Elektrik Motor Adaptörleri (IEC) / Electric Motor Couplings (IEC) /Anbauvorrichtung Für Elektromotore (IEC) / Predisposizioni Per Motori Elettrici (IEC) / Adaptations Pour Moteurs Electriques (IEC) /Acoplamientos Para Motores Eléctricos (IEC)

PLB	IEC 80				IEC 90				IEC 100				IEC 112			
	A	LT	Z	ØD	A	LT	Z	ØD	A	LT	Z	ØD	A	LT	Z	ØD
2502	247	216	56	200	247	216	56	200	247	226	66	250	247	226	66	250
2503	295				295				295				295			
2504	343				343				343				343			

PLB	IEC 132				IEC 160			
	A	LT	Z	ØD	A	LT	Z	ØD
2502	247	260	100	300	247	299	139	350
2503	295				-			
2504	-				-			

PLB	IEC ~ Kg					
	80	90	100	112	132	160
2502	64	64	65	65	69	79
2503	70	70	71	71	75	-
2504	76	76	77	77	-	-

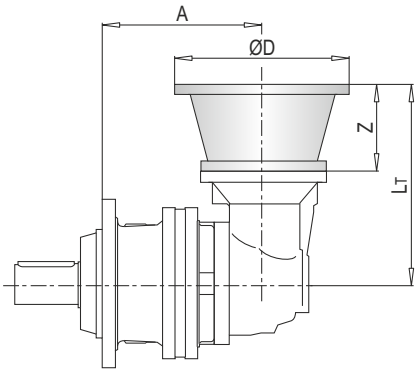

103

PLB 2500 PC - Giriş Milleri / Input Shafts / Antriebswellen / Alberi Entrata / Arbres D'entree / Ejes De Entrada

PLB	EL C 28					EL C 42					EML 42					EML 1"3/8 Z6					EM 65				
	A	LT	Z	L	Ød	A	LT	Z	L	Ød	A	LT	Z	L	Ød	A	LT	Z	L	Ød	A	LT	Z	L	Ød
2502	247	224	64	50	28	247	224	64	82	42	247	254	94	82	42	247	254	94	106	1"3/8	247	297.5	121.5	105	65
2503	295					295					295					295					295				
2504	343					343					343					343					343				

PLB	EM 1"3/8 Z6					EP 65				
	A	LT	Z	L	Ød	A	LT	Z	L	Ød
2502	247	297.5	121.5	105	1"3/8	247	329	153	105	65
2503	295					295				
2504	343					343				

PLB	~ Kg						
	EL C 28	EL C 42	EML 42	EML 1"3/8 Z6	EM 65	EM 1"3/8 Z6	EP 65
2502	62.5	63.0	66.0	66.0	74.0	74.0	83.0
2503	68.5	69.0	72.0	72.0	80.0	80.0	89.0
2504	74.5	75.0	78.0	78.0	86.0	86.0	95.0

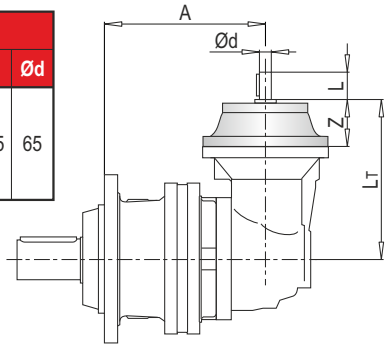

Ød
88-90

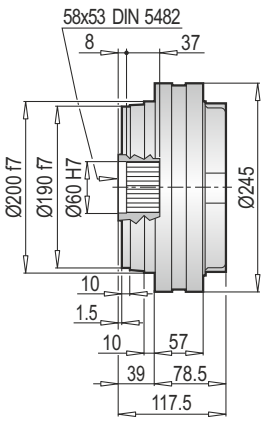

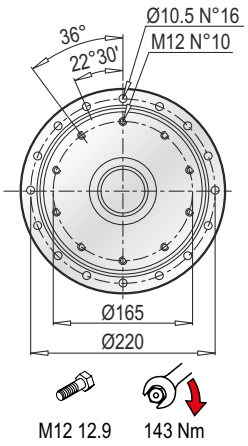

Aksesuarlar
Accessories
Zubehör
Accessori
Accessoires
Accesorios

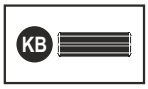

PL 2500 F - Elektrik Motor Adaptörleri (IEC) / Electrıc Motor Couplings (IEC) / Anbauvorrichtung Für Elektromotore (IEC) / Predisposizioni Per Motori Elettrici (IEC) / Adaptations Pour Moteurs Electriques (IEC) / Acoplamientos Para Motores Eléctricos (IEC)

PL	IEC 63			IEC 71			IEC 80			IEC 90			IEC 100		
	LT	Z	ØD	LT	Z	ØD	LT	Z	ØD	LT	Z	ØD	LT	Z	ØD
2501	114.5	36	140	114.5	36	160	134.5	56	200	134.5	56	200	144.5	66	250
2502	162.5			162.5			182.5			182.5			192.5		
2503	210.5			210.5			230.5			230.5			240.5		
2504	258.5			258.5			278.5			278.5			288.5		

PL	IEC 112			IEC 132			IEC 160			IEC 180		
	LT	Z	ØD	LT	Z	ØD	LT	Z	ØD	LT	Z	ØD
2501	144.5	66	250	178.5	100	300	217.5	139	350	217.5	139	350
2502	192.5			226.5			265.5			-		
2503	240.5			274.5			-			-		
2504	288.5			-			-			-		

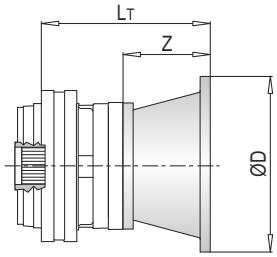

PL	IEC ~ Kg								
	63	71	80	90	100	112	132	160	180
2501	26	26	28	28	29	29	33	43	43
2502	33	33	35	35	36	36	40	50	-
2503	38	38	40	40	41	41	45	-	-
2504	44	44	46	46	47	47	-	-	-

PL 2500 F - Giriş Milleri / Input Shafts / Antriebswellen / Alberi Entrata / Arbres D'entree / Ejes De Entrada

PL	EL C 28				EL C 42				EML 42				EML 1"3/8 Z6				EM 65				EM 1"3/8 Z6			
	LT	Z	L	Ød	LT	Z	L	Ød	LT	Z	L	Ød	LT	Z	L	Ød	LT	Z	L	Ød	LT	Z	L	Ød
2501	142.5	64	50	28	142.5	64	82	42	172.5	94	82	42	172.5	94	106	1"3/8	213.5	121.5	105	65	213.5	121.5	105	1"3/8
2502	190.5				190.5				220.5				220.5				-				-			
2503	238.5				238.5				268.5				268.5				-				-			
2504	286.5				286.5				316.5				316.5				-				-			

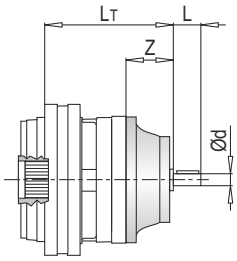

PL	EP 65			
	LT	Z	L	Ød
2501	245	153	105	65
2502	-			
2503	-			
2504	-			

PL	~ Kg						
	EL C 28	EL C 42	EML 42	EML 1"3/8 Z6	EM 65	EM 1"3/8 Z6	EP 65
2501	26.5	27.0	30.0	30.0	38.0	38.0	47.0
2502	33.5	34.0	37.0	37.0	-	-	-
2503	38.5	39.0	42.0	42.0	-	-	-
2504	44.5	45.0	48.0	48.0	-	-	-

PL 2500 F - Sonsuz Dişlili Redüktör Adaptörleri (PMRV/PRV) / Worm Gearbox Adaptors (PMRV/PRV) / Anschluss Für Schneckengetriebe (PMRV/PRV) / Predisposizioni Per Riduttori A Vite Senza Fine (PMRV/PRV) / Adaptation Pour Reducteurs A Vis Sans Fin (PMRV/PRV) / Acoplamiento Para Reductores De Tornillo Sin Fin (PMRV/PRV)

PL	PMRV/PRV 050					PMRV/PRV 063					PMRV/PRV 075				
	LM	l	h	MA	G	LM	l	h	MA	G	LM	l	h	MA	G
2501	204	50	110	60	80	213.5	63	135	72	95	202.5	75	161	86	112.5
2502	252					261.5					250.5				
2503	300					309.5					288.5				
2504	348					357.5					336.5				

PL	PMRV/PRV 090					PMRV/PRV 110					PMRV/PRV 130				
	LM	l	h	MA	G	LM	l	h	MA	G	LM	l	h	MA	G
2501	202.5	90	193	103	129.5	216.5	110	237.5	127.5	160	224	130	277.5	147.5	180
2502	250.5					-					-				
2503	298.5					-					-				
2504	346.5					-					-				

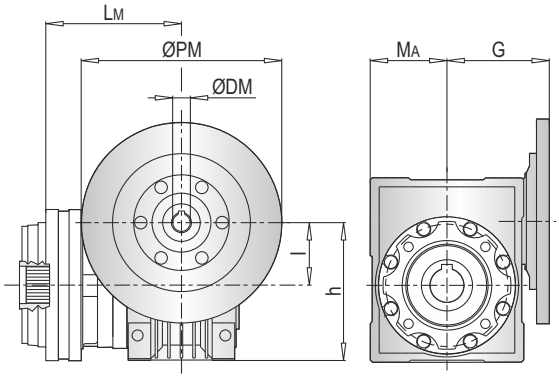

ØPM
ØDM
105

PL	PMRV/PRV ~ Kg					
	050	063	075	090	110	130
2501	29	32.5	35	40	67	84
2502	36	39.5	42	47	-	-
2503	41	44.5	47	52	-	-
2504	47	50.5	53	58	-	-

PLB 2500 F - Elektrik Motor Adaptörleri (IEC) / Electric Motor Couplings (IEC) / Anbauvorrichtung Für Elektromotore (IEC) / Predisposizioni Per Motori Elettrici (IEC) / Adaptations Pour Moteurs Electriques (IEC) / Acoplamientos Para Motores Eléctricos (IEC)

PLB	IEC 80				IEC 90				IEC 100				IEC 112			
	A	LT	Z	ØD	A	LT	Z	ØD	A	LT	Z	ØD	A	LT	Z	ØD
2502	191	216	56	200	191	216	56	200	191	226	66	250	191	226	66	250
2503	239				239				239				239			
2504	287				287				287				287			

PLB	IEC 132				IEC 160			
	A	LT	Z	ØD	A	LT	Z	ØD
2502	191	260	100	300	191	299	139	350
2503	239				-			
2504	-				-			

PLB	IEC ~ Kg					
	80	90	100	112	132	160
2502	43	43	44	44	48	58
2503	53	53	54	54	58	-
2504	58	58	59	59	-	-

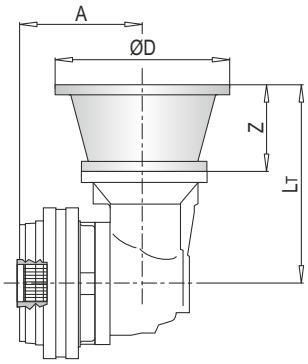

103

PLB 2500 F - Giriş Milleri / Input Shafts / Antriebswellen / Alberi Entrata / Arbres D'entree / Ejes De Entrada

PLB	EL C 28					EL C 42					EML 42					EML 1"3/8 Z6					EM 65				
	A	LT	Z	L	Ød	A	LT	Z	L	Ød	A	LT	Z	L	Ød	A	LT	Z	L	Ød	A	LT	Z	L	Ød
2502	191	224	64	50	28	191	224	64	82	42	191	254	94	82	42	191	254	94	106	1"3/8	191	297.5	121.5	105	65
2503	239					239					239					239					239				
2504	287					287					287					287					287				

PLB	EM 1"3/8 Z6					EP 65				
	A	LT	Z	L	Ød	A	LT	Z	L	Ød
2502	191	297.5	121.5	105	1"3/8	191	329	153	105	65
2503	239					239				
2504	287					287				

PLB	~ Kg						
	EL C 28	EL C 42	EML 42	EML 1"3/8 Z6	EM 65	EM 1"3/8 Z6	EP 65
2502	41.5	42.0	45.0	45.0	53.0	53.0	62.0
2503	51.5	52.0	55.0	55.0	63.0	63.0	72.0
2504	56.5	57.0	60.0	60.0	68.0	68.0	77.0

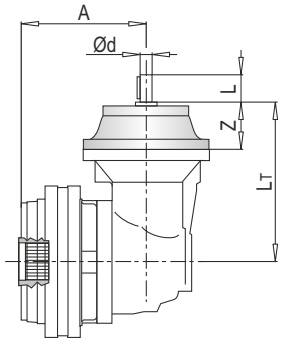

Ød
88-90

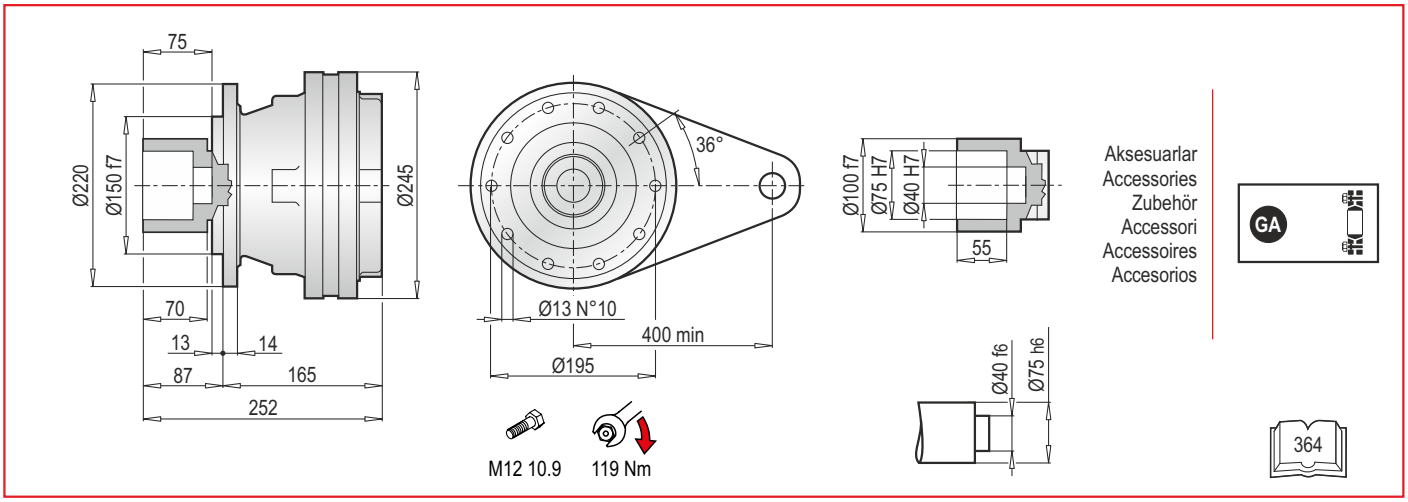

PL 2500 FS - Elektrik Motor Adaptörleri (IEC) / Electric Motor Couplings (IEC) / Anbauvorrichtung Für Elektromotore (IEC) / Predisposizioni Per Motori Elettrici (IEC) / Adaptations Pour Moteurs Electriques (IEC) / Acoplamientos Para Motores Eléctricos (IEC)

PL	IEC 63			IEC 71			IEC 80			IEC 90			IEC 100		
	LT	Z	ØD	LT	Z	ØD	LT	Z	ØD	LT	Z	ØD	LT	Z	ØD
2501	201	36	140	201	36	160	221	56	200	221	56	200	231	66	250
2502	249			249			269			269			279		
2503	297			297			317			317			327		
2504	345			345			365			365			375		

PL	IEC 112			IEC 132			IEC 160			IEC 180		
	LT	Z	ØD	LT	Z	ØD	LT	Z	ØD	LT	Z	ØD
2501	231	66	250	265	100	300	304	139	350	304	139	350
2502	279			313			352			-		
2503	327			361			-			-		
2504	375			-			-			-		

PL	IEC ~ Kg								
	63	71	80	90	100	112	132	160	180
2501	37	37	39	39	40	40	44	54	54
2502	43	43	45	45	46	46	50	60	-
2503	49	49	51	51	52	52	56	-	-
2504	55	55	57	57	58	58	-	-	-

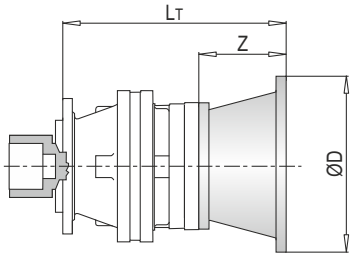

PL 2500 FS - Giriş Milleri / Input Shafts / Antriebswellen / Alberi Entrata / Arbres D'entree / Ejes De Entrada

PL	EL C 28				EL C 42				EML 42				EML 1"3/8 Z6				EM 65				EM 1"3/8 Z6			
	LT	Z	L	Ød	LT	Z	L	Ød	LT	Z	L	Ød	LT	Z	L	Ød	LT	Z	L	Ød	LT	Z	L	Ød
2501	229	64	50	28	229	64	82	42	259	94	82	42	259	94	106	1"3/8	300	121.5	105	65	300	121.5	105	1"3/8
2502	277				277				307				307				-				-			
2503	325				325				355				355				-				-			
2504	373				373				403				403				-				-			

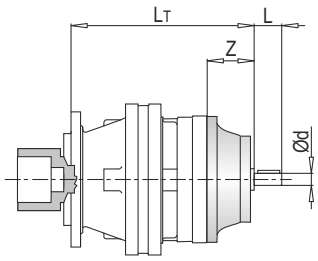

PL	EP 65			
	LT	Z	L	Ød
2501	331.5	153	105	65
2502	-			
2503	-			
2504	-			

PL	~ Kg						
	EL C 28	EL C 42	EML 42	EML 1"3/8 Z6	EM 65	EM 1"3/8 Z6	EP 65
2501	26.5	27.0	30.0	30.0	38.0	38.0	47.0
2502	33.5	34.0	37.0	37.0	-	-	-
2503	38.5	39.0	42.0	42.0	-	-	-
2504	44.5	45.0	48.0	48.0	-	-	-

PL 2500 FS - Sonsuz Dişlili Redüktör Adaptörleri (PMRV/PRV) / Worm Gearbox Adaptors (PMRV/PRV) / Anschluss Für Schneckengetriebe (PMRV/PRV) / Predisposizioni Per Riduttori A Vite Senza Fine (PMRV/PRV) / Adaptation Pour Reducteurs A Vis Sans Fin (PMRV/PRV) / Acoplamiento Para Reductores De Tornillo Sin Fin (PMRV/PRV)

PL	PMRV/PRV 050					PMRV/PRV 063					PMRV/PRV 075				
	LM	l	h	MA	G	LM	l	h	MA	G	LM	l	h	MA	G
2501	290.5	50	110	60	80	300	63	135	72	95	279	75	161	86	112.5
2502	338.5					348					327				
2503	386.5					396					375				
2504	434.5					444					423				

PL	PMRV/PRV 090					PMRV/PRV 110					PMRV/PRV 130				
	LM	l	h	MA	G	LM	l	h	MA	G	LM	l	h	MA	G
2501	289	90	193	103	129.5	316.5	110	237.5	127.5	160	324	130	277.5	147.5	180
2502	337					-					-				
2503	385					-					-				
2504	433					-					-				

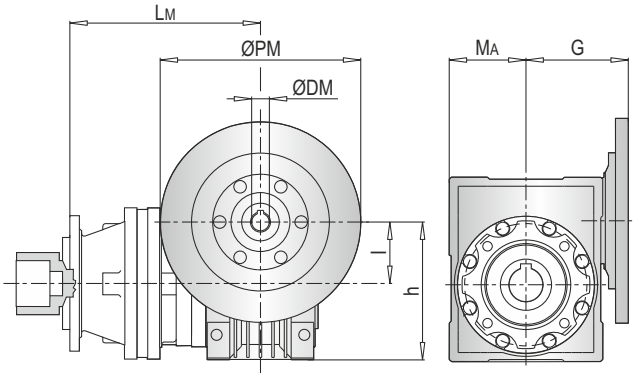

ØPM
ØDM
105

PL	PMRV/PRV ~ Kg					
	050	063	075	090	110	130
2501	40	43.5	46	51	78	95
2502	46	49.5	52	57	-	-
2503	52	55.5	58	63	-	-
2504	58	61.5	64	69	-	-

PLB 2500 FS - Elektrik Motor Adaptörleri (IEC) / Electric Motor Couplings (IEC) /Anbauvorrichtung Für Elektromotore (IEC) / Predisposizioni Per Motori Elettrici (IEC) / Adaptations Pour Moteurs Electriques (IEC) /Acoplamientos Para Motores Eléctricos (IEC)

PLB	IEC 80				IEC 90				IEC 100				IEC 112			
	A	LT	Z	ØD	A	LT	Z	ØD	A	LT	Z	ØD	A	LT	Z	ØD
2502	240	216	56	200	240	216	56	200	240	226	66	250	240	226	66	250
2503	288				288				288				288			
2504	336				336				336				336			

PLB	IEC 132				IEC 160			
	A	LT	Z	ØD	A	LT	Z	ØD
2502	240	260	100	300	240	299	139	350
2503	288				-			
2504	-				-			

PLB	IEC ~ Kg					
	80	90	100	112	132	160
2502	57	57	58	58	62	72
2503	63	63	64	64	68	-
2504	69	69	70	70	-	-

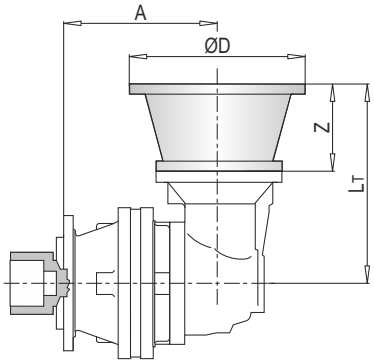

103

PLB 2500 FS - Giriş Milleri / Input Shafts / Antriebswellen / Alberi Entrata / Arbres D'entree / Ejes De Entrada

PLB	EL C 28					EL C 42					EML 42					EML 1"3/8 Z6					EM 65				
	A	LT	Z	L	Ød	A	LT	Z	L	Ød	A	LT	Z	L	Ød	A	LT	Z	L	Ød	A	LT	Z	L	Ød
2502	240	224	64	50	28	240	224	64	82	42	240	254	94	82	42	240	254	94	106	1"3/8	240	297.5	121.5	105	65
2503	288					288					288					288					288				
2504	336					336					336					336					336				

PLB	EM 1"3/8 Z6					EP 65				
	A	LT	Z	L	Ød	A	LT	Z	L	Ød
2502	240	297.5	121.5	105	1"3/8	240	329	153	105	65
2503	288					288				
2504	336					336				

PLB	~ Kg						
	EL C 28	EL C 42	EML 42	EML 1"3/8 Z6	EM 65	EM 1"3/8 Z6	EP 65
2502	55.5	56.0	59.0	59.0	67.0	67.0	76.0
2503	61.5	62.0	65.0	65.0	73.0	73.0	82.0
2504	67.5	68.0	71.0	71.0	79.0	79.0	88.0

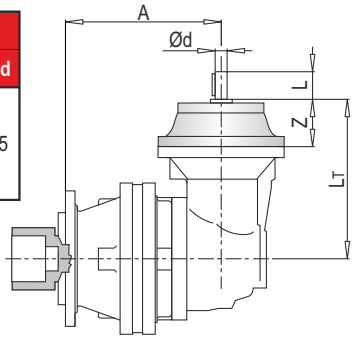

Ød
88-90

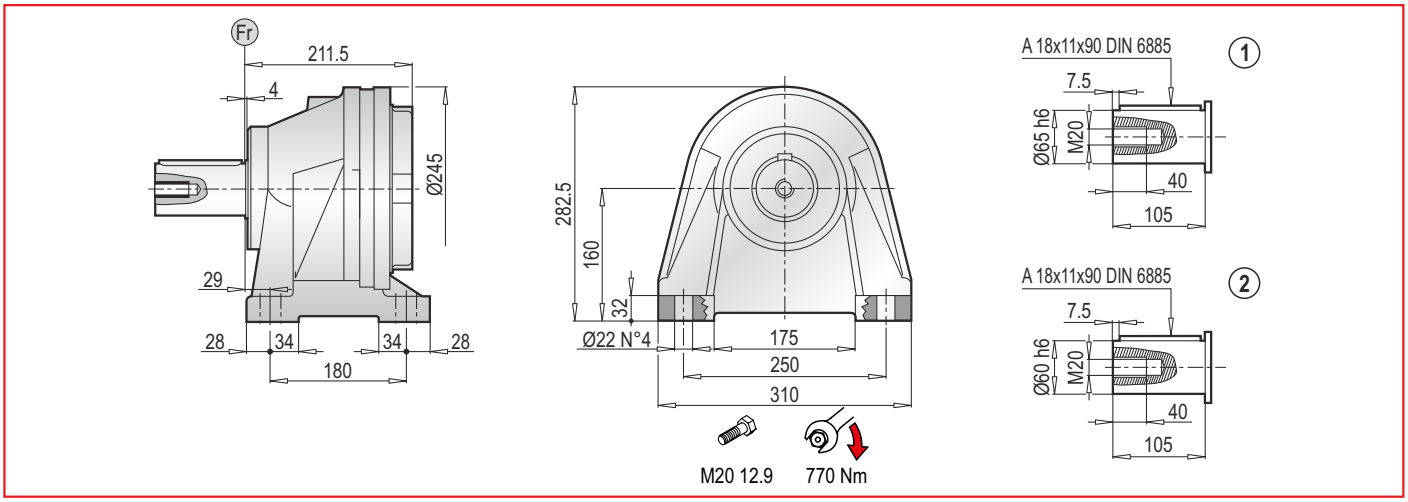

PL 2500 CPC - Elektrik Motor Adaptörleri (IEC) / Electrıc Motor Couplings (IEC) / Anbauvorrichtung Für Elektromotore (IEC) / Predisposizioni Per Motori Elettrici (IEC) / Adaptations Pour Moteurs Electriques (IEC) / Acoplamientos Para Motores Eléctricos (IEC)

PL	IEC 63			IEC 71			IEC 80			IEC 90			IEC 100		
	LT	Z	ØD	LT	Z	ØD	LT	Z	ØD	LT	Z	ØD	LT	Z	ØD
2501	247.5	36	140	247.5	36	160	267.5	56	200	267.5	56	200	277.5	66	250
2502	295.5			295.5			315.5			315.5			325.5		
2503	343.5			343.5			363.5			363.5			373.5		
2504	391.5			391.5			411.5			411.5			421.5		

PL	IEC 112			IEC 132			IEC 160			IEC 180		
	LT	Z	ØD	LT	Z	ØD	LT	Z	ØD	LT	Z	ØD
2501	277.5	66	250	311.5	100	300	350.5	139	350	350.5	139	350
2502	325.5			359.5			398.5			-		
2503	373.5			407.5			-			-		
2504	421.5			-			-			-		

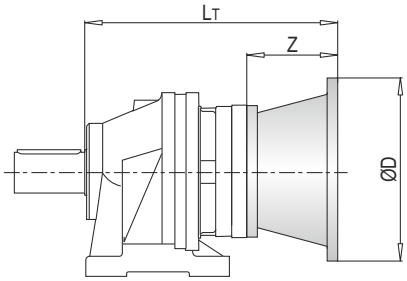

PL	IEC ~ Kg								
	63	71	80	90	100	112	132	160	180
2501	48	48	50	50	51	51	55	65	65
2502	54	54	56	56	57	57	61	71	-
2503	60	60	62	62	63	63	67	-	-
2504	66	66	68	68	69	69	-	-	-

PL 2500 CPC - Giriş Milleri / Input Shafts / Antriebswellen / Alberi Entrata / Arbres D'entree / Ejes De Entrada

PL	EL C 28				EL C 42				EML 42				EML 1"3/8 Z6				EM 65				EM 1"3/8 Z6			
	LT	Z	L	Ød	LT	Z	L	Ød	LT	Z	L	Ød	LT	Z	L	Ød	LT	Z	L	Ød	LT	Z	L	Ød
2501	275.5	64	50	28	275.5	64	82	42	305.5	94	82	42	305.5	94	106	1"3/8	346.5	121.5	105	65	346.5	121.5	105	1"3/8
2502	323.5				323.5				353.5				353.5				-				-			
2503	371.5				371.5				401.5				401.5				-				-			
2504	419.5				419.5				449.5				449.5				-				-			

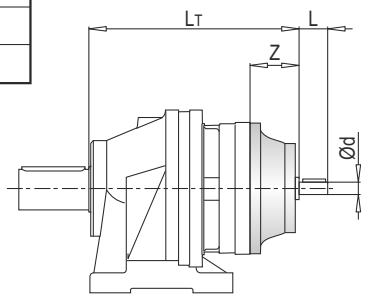

PL	EP 65			
	LT	Z	L	Ød
2501	378	153	105	65
2502	-			
2503	-			
2504	-			

PL	~ Kg						
	EL C 28	EL C 42	EML 42	EML 1"3/8 Z6	EM 65	EM 1"3/8 Z6	EP 65
2501	48.5	49.0	52.0	52.0	60.0	60.0	69.0
2502	54.5	55.0	58.0	58.0	-	-	-
2503	60.5	61.0	64.0	64.0	-	-	-
2504	66.5	67.0	71.0	71.0	-	-	-

PL 2500 CPC - Sonsuz Dişlili Redüktör Adaptörleri (PMRV/PRV) / Worm Gearbox Adaptors (PMRV/PRV) / Anschluss Für Schneckengetriebe (PMRV/PRV) / Predisposizioni Per Riduttori A Vite Senza Fine (PMRV/PRV) / Adaptation Pour Reducteurs A Vis Sans Fin (PMRV/PRV) / Acoplamiento Para Reductores De Tornillo Sin Fin (PMRV/PRV)

PL	PMRV/PRV 050					PMRV/PRV 063					PMRV/PRV 075				
	LM	l	h	MA	G	LM	l	h	MA	G	LM	l	h	MA	G
2501	337	50	110	60	80	346.5	63	135	72	95	325.5	75	161	86	112.5
2502	385					394.5					373.5				
2503	433					442.5					421.5				
2504	481					490.5					469.5				

PL	PMRV/PRV 090					PMRV/PRV 110					PMRV/PRV 130				
	LM	l	h	MA	G	LM	l	h	MA	G	LM	l	h	MA	G
2501	335.5	90	193	103	129.5	349.5	110	237.5	127.5	160	357	130	277.5	147.5	180
2502	383.5					-					-				
2503	431.5					-					-				
2504	479.5					-					-				

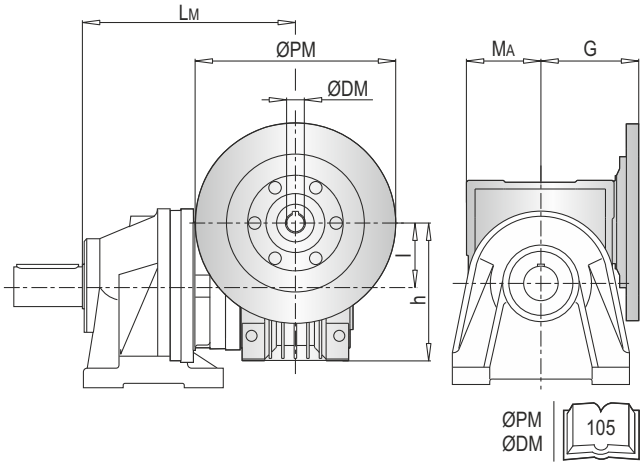

PL	PMRV/PRV ~ Kg					
	050	063	075	090	110	130
2501	51	54.5	57	62	89	106
2502	57	60.5	63	68	-	-
2503	63	66.5	69	74	-	-
2504	69	72.5	75	79	-	-

PLB 2500 CPC - Elektrik Motor Adaptörleri (IEC) / Electric Motor Couplings (IEC) / Anbauvorrichtung Für Elektromotore (IEC) / Predisposizioni Per Motori Elettrici (IEC) / Adaptations Pour Moteurs Electriques (IEC) / Acoplamientos Para Motores Eléctricos (IEC)

PLB	IEC 80				IEC 90				IEC 100				IEC 112			
	A	LT	Z	ØD	A	LT	Z	ØD	A	LT	Z	ØD	A	LT	Z	ØD
2502	286.5	216	56	200	286.5	216	56	200	286.5	226	66	250	286.5	226	66	250
2503	334.5				334.5				334.5				334.5			
2504	382.5				382.5				382.5				382.5			

PLB	IEC 132				IEC 160			
	A	LT	Z	ØD	A	LT	Z	ØD
2502	286.5	260	100	300	286.5	299	139	350
2503	334.5				-			
2504	-				-			

PLB	IEC ~ Kg					
	80	90	100	112	132	160
2502	68	68	69	69	73	83
2503	74	74	75	75	79	-
2504	80	80	81	81	-	-

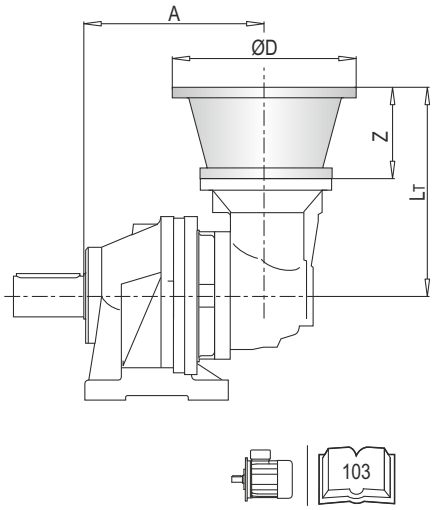

PLB 2500 CPC - Giriş Milleri / Input Shafts / Antriebswellen / Alberi Entrata / Arbres D'entree / Ejes De Entrada

PLB	EL C 28					EL C 42					EML 42					EML 1"3/8 Z6					EM 65				
	A	LT	Z	L	Ød	A	LT	Z	L	Ød	A	LT	Z	L	Ød	A	LT	Z	L	Ød	A	LT	Z	L	Ød
2502	286.5	224	64	50	28	286.5	224	64	82	42	286.5	254	94	82	42	286.5	254	94	106	1"3/8	286.5	297.5	121.5	105	65
2503	334.5					334.5					334.5					334.5					334.5				
2504	382.5					382.5					382.5					382.5					382.5				

PLB	EM 1"3/8 Z6					EP 65				
	A	LT	Z	L	Ød	A	LT	Z	L	Ød
2502	286.5	297.5	121.5	105	1"3/8	286.5	329	153	105	65
2503	334.5					334.5				
2504	382.5					382.5				

PLB	~ Kg						
	EL C 28	EL C 42	EML 42	EML 1"3/8 Z6	EM 65	EM 1"3/8 Z6	EP 65
2502	66.5	67.0	70.0	70.0	78.0	78.0	89.0
2503	72.5	73.0	76.0	76.0	84.0	84.0	93.0
2504	78.5	79.0	82.0	82.0	90.0	90.0	99.0

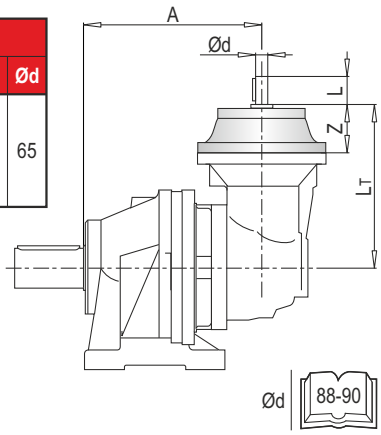

PL	~ Kg MS
2501	30
2502	36
2503	42
2504	48

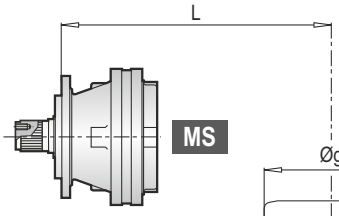

PL	~ Kg MC
2501	30
2502	36
2503	42
2504	48

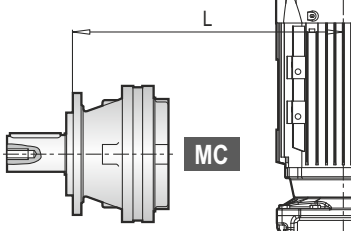

PL	~ Kg PS
2501	39
2502	45
2503	51
2504	57

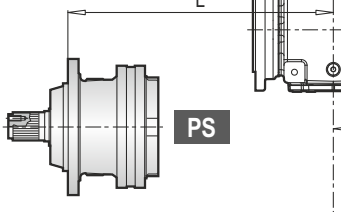

PL	~ Kg PC
2501	39
2502	45
2503	51
2504	57

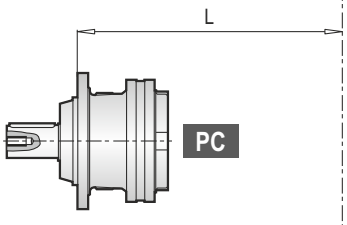

PL	~ Kg F
2501	21
2502	28
2503	33
2504	39

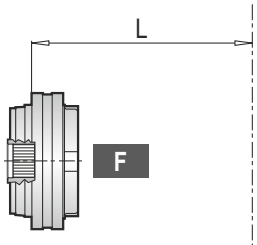

PL	~ Kg FS
2501	32
2502	38
2503	44
2504	50

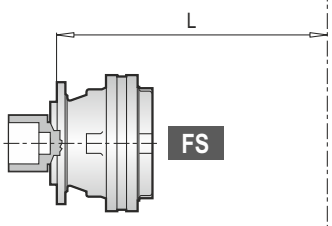

PL	~ Kg CPC
2501	43
2502	49
2503	55
2504	61

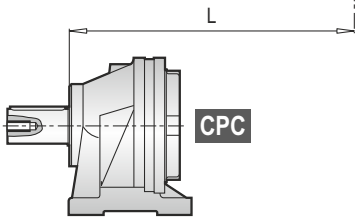

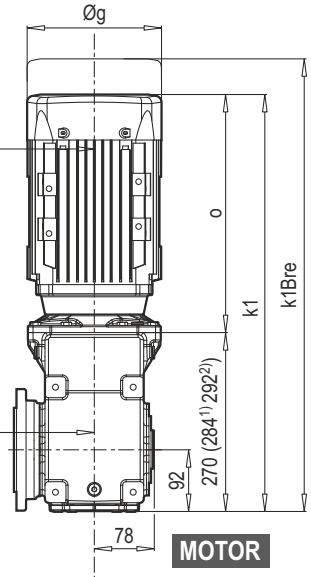

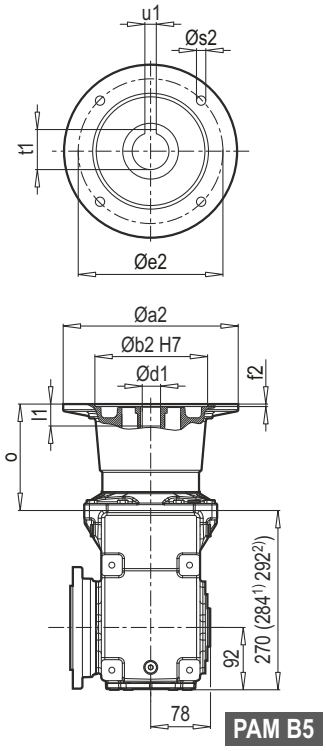

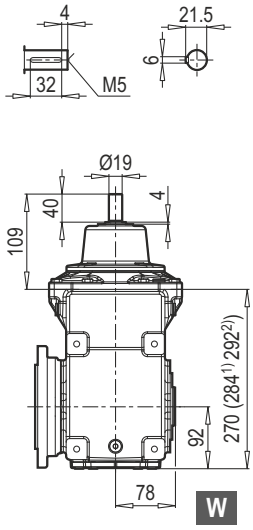

PL	L						
	MS	MC	PS	PC	F	FS	CPC
2501	323	323	330	330	237	323	370
2502	371	371	378	378	285	371	418
2503	421	421	428	428	335	421	468
2504	467	467	474	474	381	467	514

W ~ Kg	
PKD F 4290	35.5

	MOTOR	g	g1	k1	k1Bre	o
PKD F 4290	63 M	124	111	468	520	198
	71 M	140	119	497	557	227
	80 M	159	127	524	586	254
	90 S	193	151	564	637	280
	90 L	193	151	584	657	300
	100 L[1]	217	160	595	676	311
	112 M[2]	232	168	660	740	368
	132 S[2]	279	182	665	773	373
	132 M[2]	279	182	700	841	408

~ Kg	
MOTOR	PKD F 4290
63 M	37
71 M	42
80 M	44
90 S	47
90 L	49
100 L	60
112 M	68
132 S	84
132 M	95

	PAM B5	Øa2	Øb2	Øe2	f2	Øs2	Ød1	l1	t1	u1	o
PKD F 4290	63	140	95	115	3.5	M8	11	23	12.8	4	85
	71	160	110	130	4.0	M8	14	30	16.3	5	85
	80	200	130	165	4.0	M10	19	40	21.8	6	103
	90	200	130	165	4.0	M10	24	50	27.3	8	103
	100	250	180	215	5.0	M12	28	60	31.3	8	126
	112	250	180	215	5.0	M12	28	60	31.3	8	126
	132	300	230	265	5.0	M12	38	80	41.3	10	175

~ Kg	
PAM B5	PKD F 4290
63	35
71	36
80	38
90	38
100	43
112	43
132	50

PL	~ Kg MS
2501	30
2502	36
2503	42
2504	48

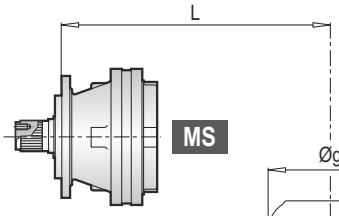

PL	~ Kg MC
2501	30
2502	36
2503	42
2504	48

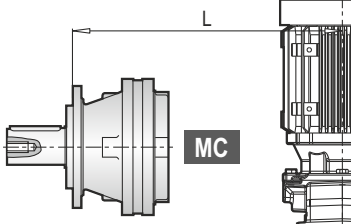

PL	~ Kg PS
2501	39
2502	45
2503	51
2504	57

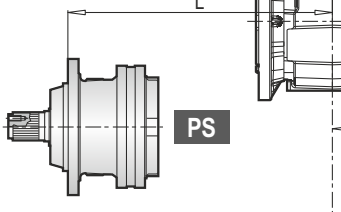

PL	~ Kg PC
2501	39
2502	45
2503	51
2504	57

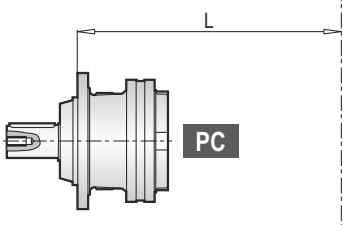

PL	~ Kg F
2501	21
2502	28
2503	33
2504	39

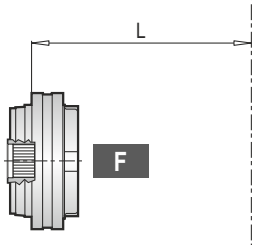

PL	~ Kg FS
2501	32
2502	38
2503	44
2504	50

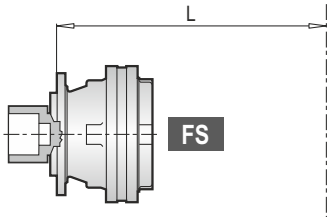

PL	~ Kg CPC
2501	43
2502	49
2503	55
2504	61

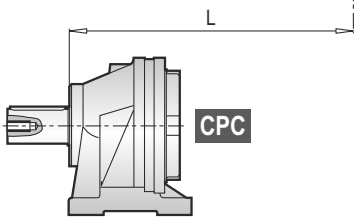

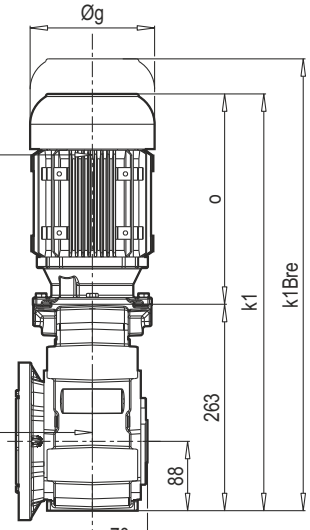

MOTOR

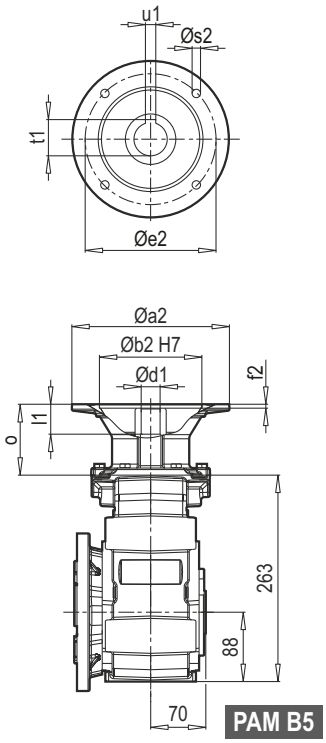

PAM B5

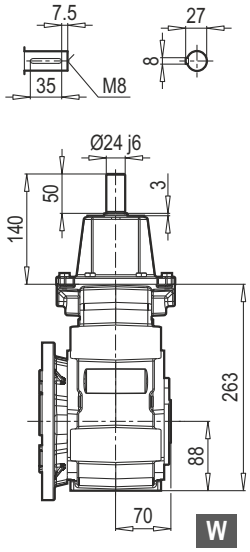

W

PL	L						
	MS	MC	PS	PC	F	FS	CPC
2501	323	323	330	330	237	323	370
2502	371	371	378	378	285	371	418
2503	419	419	426	426	333	419	466
2504	467	467	474	474	381	467	514

W ~ Kg	
K 35390	24

	MOTOR	g	g1	k1	k1Bre	o
K 35390	63 M	124	111	475	527	212
	71 M	140	119	504	564	241
	80 M	159	127	530	592	267
	90 S	193	151	576	649	313
	90 L	193	151	596	669	333
	100 L	217	160	597	678	334
	112 M	232	168	647	727	384

~ Kg	
MOTOR	K 35390
63 M	27
71 M	32
80 M	33
90 S	33
90 L	38
100 L	48
112 M	56

	PAM B5	Øa2	Øb2	Øe2	f2	Øs2	Ød1	l1	t1	u1	o
K 35390	63	140	95	115	4.5	M8	11	25	12.8	4	57
	71	160	110	130	5	M8	14	32	16.3	5	69
	80	200	130	165	5	M10	19	42	21.8	6	90
	90	200	130	165	5	M10	24	52	27.3	8	90
	100	250	180	215	5.5	M12	28	62	31.3	8	105
	112	250	180	215	5.5	M12	28	62	31.3	8	105

~ Kg	
PAM B5	K 35390
63	21
71	22
80	23
90	23
100	27
112	27

AKSESUARLAR / ACCESSORIES / ZUBEHÖR / ACCESSORI / ACCESSOIRES / ACCESORIOS

YZ
Pinyon / Pinion / Ritzel / Pignoni / Pignon / Piñones

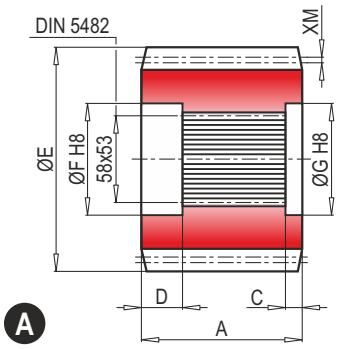

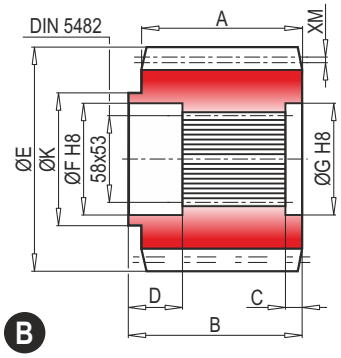

	Çıkış tipi Output type Abtriebs-version Versione Version Versión	M	Z	XM	A	B	C	D	E	F	G	K	Malzeme Material Material Materiale Matière Material	Kod Code Bestell-Nr. Codice Code Código
	M	8	13	0	68	-	8.5	22.5	120	60	60	-	18NiCrMo5	1071.218.042
A	M	8	11	5	68	-	8.5	22.5	110.8	60	60	-	38NiCrMo4	1071.258.042
	M	8	12	0	68	-	8	21	112.8	60	60	-	38NiCrMo4	1071.196.042
B	P	10	14	3.2	103	116	9.5	22.5	162.4	60	60	105	18NiCrMo5	1071.298.042
	M	8	15	0	68	-	8.5	22.5	136	60	60	-	38NiCrMo4	1071.163.042
A	P	6	14	3	95	-	23	21	99.6	60	60	-	38NiCrMo4	1071.160.042
	P	10	11	8	90	-	8.5	22.5	142.1	60	60	-	18NiCrMo5	1071.297.042

FF
Sabitleme rondelası / Stop bottom plate / Endscheibe / Fondello di arresto / Bouchon de fermeture / Tapón de detención

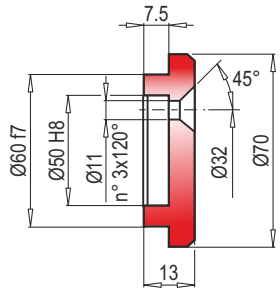

Kod / Code
Bestell - Nr. / Codice
Code / Código
1075.015.000

BS
Spline kaplin / Splined bushing / Innenverzahnte Buchse / Boccola scanalata / Moyeu cannelé / Casquillo ranurado

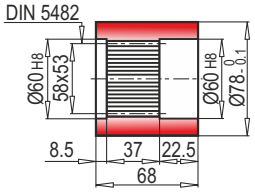

Malzeme / Material
Material / Materiale
Matière / Material

UNI C40
SAE 1040
DIN Ck40

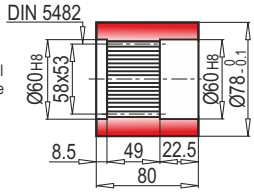

MS
Kod / Code
Bestell - Nr. / Codice
Code / Código
2171.101.076

PS
Kod / Code
Bestell - Nr. / Codice
Code / Código
4171.101.076

KB
Spline mil / Splined rod / Außenverzahnte Welle / Barra scanalata / Arbre cannelé / Barra ranurada

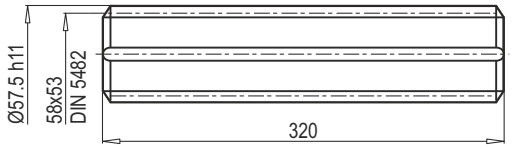

Malzeme / Material
Material / Materiale
Matière / Material

UNI 39NiCrMo3
Sertleşmiş ve tavlanmış / Hardened and tempered
Vergütet / Bonifié
Bonificado / Endurecido e temperado

Kod / Code
Bestell - Nr. / Codice
Code / Código
3071.181.042

FL
Flanş / Flange / Flansch / Flangia / Bride / Brida

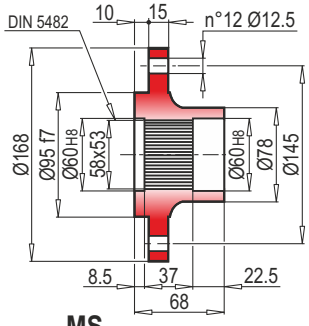

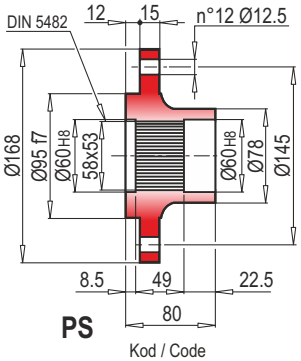

MS
Kod / Code
Bestell - Nr. / Codice
Code / Código
2171.103.025

PS
Kod / Code
Bestell - Nr. / Codice
Code / Código
4171.103.098

GA
Konik sıktırma / Shrink disc / Schrumpfscheibe / Giunto di attrito / Frette de serrage / Disco de contracción

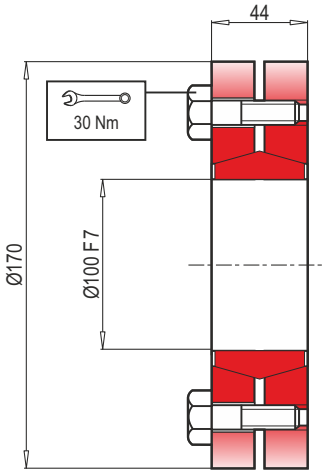

Maksimum moment
Max. torque
Max. Drehmoment
Coppia max.
Couple max.
Momento máx.
7.5 kNm

Kod / Code
Bestell - Nr. / Codice
Code / Código
5109.100.000

TR RADYAL YÜKLER (Fr)

Aşağıdaki grafikler istenilen $n_2$xh değerinin elde edilmesi için gerekli olan radyal yükleri ve K faktörlerini göstermektedir.

EN RADIAL LOADS (Fr)

The following curves show the radial loads and the K factors to obtain the required n2xh value.

DE RADIALLAST (Fr)

In den nachstehenden Diagrammen ist die Radiallast un der Koeffizient K dargestellt und kann mit dem gewünschten Wert $n_2$xh verglichen werden.

IT CARICHI RADIALI (Fr)

Nei diagrammi seguenti sono riportati i carichi radiali e i coefficienti K per rapportarli al valore $n_2$xh desiderato.

FR CHARGES RADIALES (Fr)

Dans les diagrammes suivants sont indiqués les charges radiales et les facteurs K de façon à obtenir la valeur $n_2$xh désirée.

ES CARGAS RADIALES (Fr)

En los siguientes diagramas se indican las cargas radiales y los coefici - entes K para obtener el valor requerido $n_2$xh.

M - P - CPC*

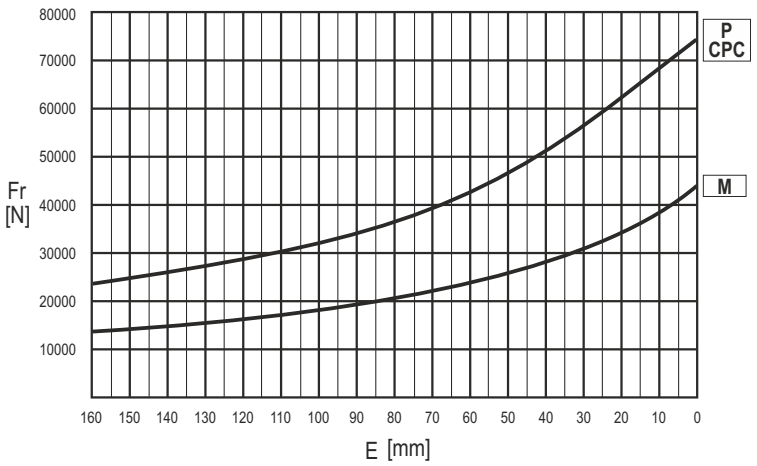

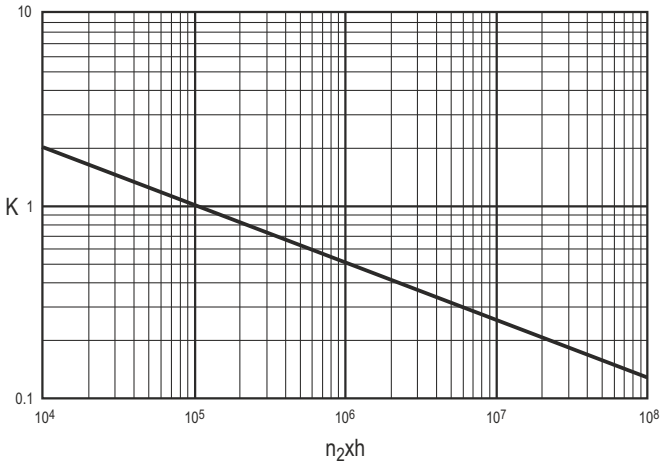

	n x h				
	10^5	10^4	10^6	10^7	10^8
M - P	Fr	Fr • K			
CPC*	Fr • 0.75	Fr • K • 0.75			

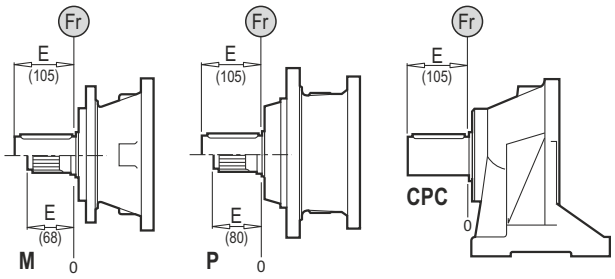

TR EKSENEL YÜKLER (Fa)

Tabloda yer alan eksenel yük değerleri, çıkış tipine ve uygulamanın yük yönüne göre değişir.

EN AXIAL LOADS (Fa)

The values of the axial loads in the table refer to the output versions and load direction of application.

DE AXIALLAST (Fa)

Die dargestellten Werte der Axiallast basieren auf der Version und der applizierten Lastrichtung.

IT CARICHI ASSIALI (Fa)

I valori dei carichi assiali indicati in tabella sono riferiti alle versioni e alla direzione di applicazione del carico.

FR CHARGES AXIALES (Fa)

Les valeurs des charges axiales indiquées dans le tableau se réfèrent aux versions et à la direction d'application de lacharge.

ES CARGAS AXIALES (Fa)

Los valores de las cargas axiales indicados en la tabla se refieren a las versiones y a la dirección de aplicación de la carga.

Fa [N]	M	P - CPC	
	32000	32000	←
	32000	48000	→

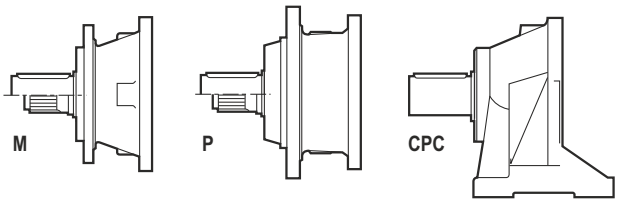

TEKNİK VERİLER / TECHNICAL DATA / TECHNISCHE DATEN / DATI TECNICI / DONNÉES TECHNIQUES / DATOS TÉCNICAS

	i_{ges}	M_2max (n1: 1400rpm) (Nm)
5001	3.78 ... 7.25	2140
5002	13.4 ... 48.9	2790
5003	52.1 ... 330.3	3750
5004	352.0 ... 1845.3	5310

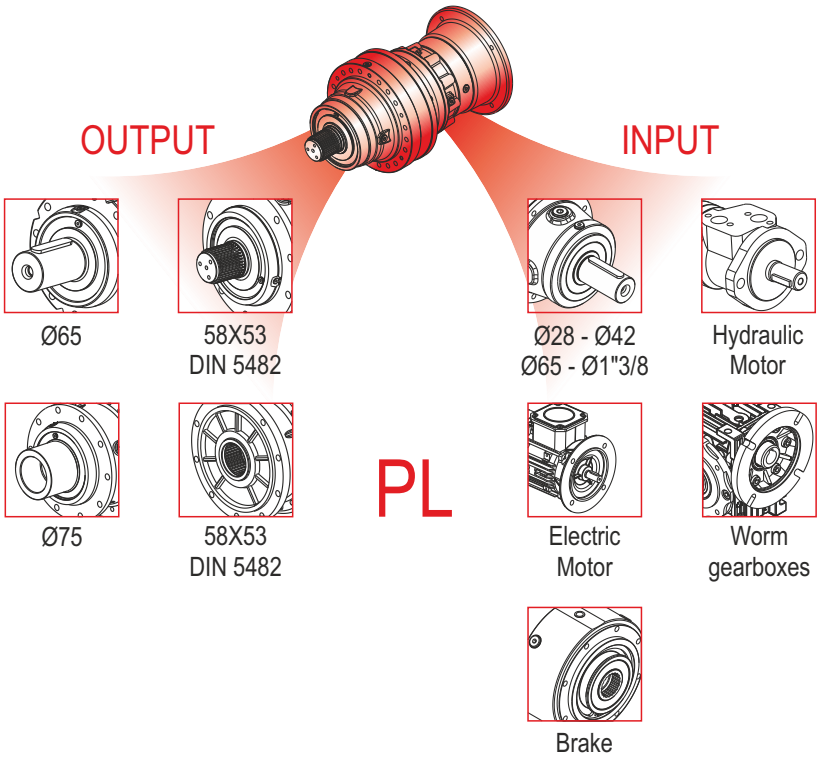

	i_{ges}	M_2max (n1: 1400rpm) (Nm)
5002	13.1 ÷ 39.5	2890
5003	39.4 ÷ 143.5	3360
5004	140.1 ÷ 1244.1	4580

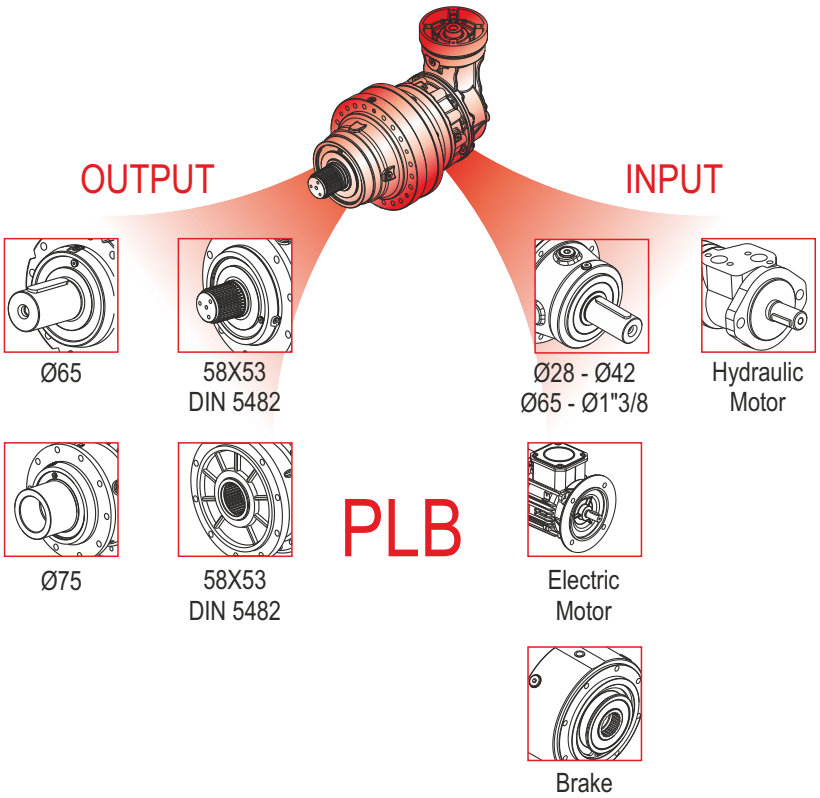

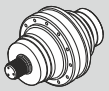	Pt [kW]	n_{1max} [min^{-1}]	i_{ges}	Mc [kNm] n_2 x h 10.000	n_2 x h 20.000	n_2 x h 50.000	n_2 x h 100.000	Giriş- Input - Antrieb - Entrata - Entrée - Entrada IEC (B5)	PMRV / PRV	EL - EML EM - EP - ET
PL 5001	20	2800	3.78 4.13 5.17 6.00 7.25	5.89 5.37 4.39 3.85 3.01	5.21 4.75 3.89 3.41 2.66	4.44 4.05 3.30 2.90 2.26	3.93 3.58 2.93 2.57 2.01	63 71 80 90 100 112 132 160	050 063 075 090 110 130	EL C 28 EL C 42 EML 42 EML 1"3/8 Z6 EM 65 EM 1"3/8 Z6 EP 65
PL 5002	15	2800	13.4 16.2 18.4 23.1 28.9 34.9 40.5 48.9	5.89 5.89 4.39 5.37 4.39 4.39 3.85 3.01	5.21 5.21 3.89 4.75 3.89 3.89 3.41 2.66	4.44 4.44 3.30 4.05 3.30 3.30 2.90 2.26	3.93 3.93 2.93 3.58 2.93 2.93 2.57 2.01	63 71 80 90 100 112 132 160	050 063 075 090	EL C 28 EL C 42 EML 42 EML 1"3/8 Z6
PL 5003	10	2800	52.1 57.6 62.9 75.2 82.1 90.7 99.0 119.3 129.4 149.5 155.9 162.0 173.6 195.3 235.4 273.4 302.2 330.3	5.37 5.89 5.37 5.89 5.37 5.89 5.37 5.37 5.37 4.39 5.37 4.39 3.85 4.39 4.39 3.85 4.39 3.01	4.75 5.21 4.75 5.21 4.75 5.21 4.75 4.75 4.75 3.89 4.75 3.89 3.41 3.89 3.89 3.41 3.89 2.66	4.05 4.44 4.05 4.44 4.05 4.44 4.05 4.05 4.05 3.30 4.05 3.30 2.90 3.30 3.30 2.90 3.30 2.26	3.58 3.93 3.58 3.93 3.58 3.93 3.58 3.58 3.58 2.93 3.58 2.93 2.57 2.93 2.93 2.57 2.93 2.01	63 71 80 90 100 112 132 160	050 063 075 090	EL C 28 EL C 42 EML 42 EML 1"3/8 Z6
PL 5004	6	2800	352.0 365.8 388.6 413.9 424.3 468.4 511.4 554.4 612.0 668.2 737.7 805.5 858.0 907.3 1052.5 1121.1 1318.3 1589.0 1845.3	5.37 4.39 5.89 5.89 5.37 5.89 5.37 5.37 5.89 5.37 5.89 5.37 5.37 4.39 5.37 5.37 4.39 4.39 3.85	4.75 3.89 5.21 5.21 4.75 5.21 4.75 4.75 5.21 4.75 5.21 4.75 4.75 3.89 4.75 4.75 3.89 3.89 3.41	4.05 3.30 4.44 4.44 4.05 4.44 4.05 4.05 4.44 4.05 4.44 4.05 4.05 3.30 4.05 4.05 3.30 3.30 2.90	3.58 2.93 3.93 3.93 3.58 3.93 3.58 3.58 3.93 3.58 3.93 3.58 3.58 2.93 3.58 3.58 2.93 2.93 2.57	63 71 80 90 100 112 132	050 063 075 090	EL C 28 EL C 42 EML 42 EML 1"3/8 Z6

	Pt [kW]	n_{1max} [min^{-1}]	i_{ges}	Mc [kNm]				Giriş- Input - Antrieb - Entrata - Entrée - Entrada	
				n_2 x h	n_2 x h	n_2 x h	n_2 x h		
				10.000	20.000	50.000	100.000	IEC (B5)	EL - EML EM - EP - ET
PLB 5002	15	2800	13.1 14.2 17.8 20.6 22.5 28.1 32.7 39.5	5.89 5.37 4.39 5.89 5.37 4.39 3.85 3.01	5.21 4.75 3.89 5.21 4.75 3.89 3.41 2.66	4.44 4.05 3.30 4.44 4.05 3.30 2.90 2.26	3.93 3.58 2.93 3.93 3.58 2.93 2.57 2.01	80 90 100 112 132 160	EL C 28 EL C 42 EML 42 EML 1"3/8 Z6 EM 65 EM 1"3/8 Z6 EP 65
PLB 5003	10	2800	39.4 47.5 53.9 67.8 75.4 84.9 91.1 102.3 118.8 143.5	5.89 5.89 4.39 5.37 3.85 4.39 3.01 4.39 3.85 3.01	5.21 5.21 3.89 4.75 3.41 3.89 2.66 3.89 3.41 2.66	4.44 4.44 3.30 4.05 2.90 3.30 2.26 3.30 2.90 2.26	3.93 3.93 2.93 3.58 2.57 2.93 2.01 2.93 2.57 2.01	80 90 100 112 132	EL C 28 EL C 42 EML 42 EML 1"3/8 Z6 EM 65 EM 1"3/8 Z6 EP 65
PLB 5004	6	2800	140.1 168.9 184.4 220.6 240.9 265.9 290.4 320.6 350.0 422.4 449.4 475.3 509.1 551.9 615.2 665.3 735.5 801.9 1244.1	5.89 5.89 5.37 5.89 5.37 5.89 5.37 5.89 5.37 3.85 5.37 4.39 3.85 3.85 3.01 3.85 4.39 3.85 3.01	5.21 5.21 4.75 5.21 4.75 5.21 4.75 5.21 4.75 3.41 4.75 3.89 3.41 3.41 2.66 3.41 3.89 3.41 2.66	4.44 4.44 4.05 4.44 4.05 4.44 4.05 4.44 4.05 2.90 4.05 3.30 2.90 2.90 2.26 2.90 3.30 2.90 2.26	3.93 3.93 3.58 3.93 3.58 3.93 3.58 3.93 3.58 2.57 3.58 2.93 2.57 2.57 2.01 2.57 2.93 2.57 2.01	80 90 100 112 132	EL C 28 EL C 42 EML 42 EML 1"3/8 Z6 EM 65 EM 1"3/8 Z6 EP 65

(n_2 x h = 20.000)

$$M_{max} = M_c \times 2$$

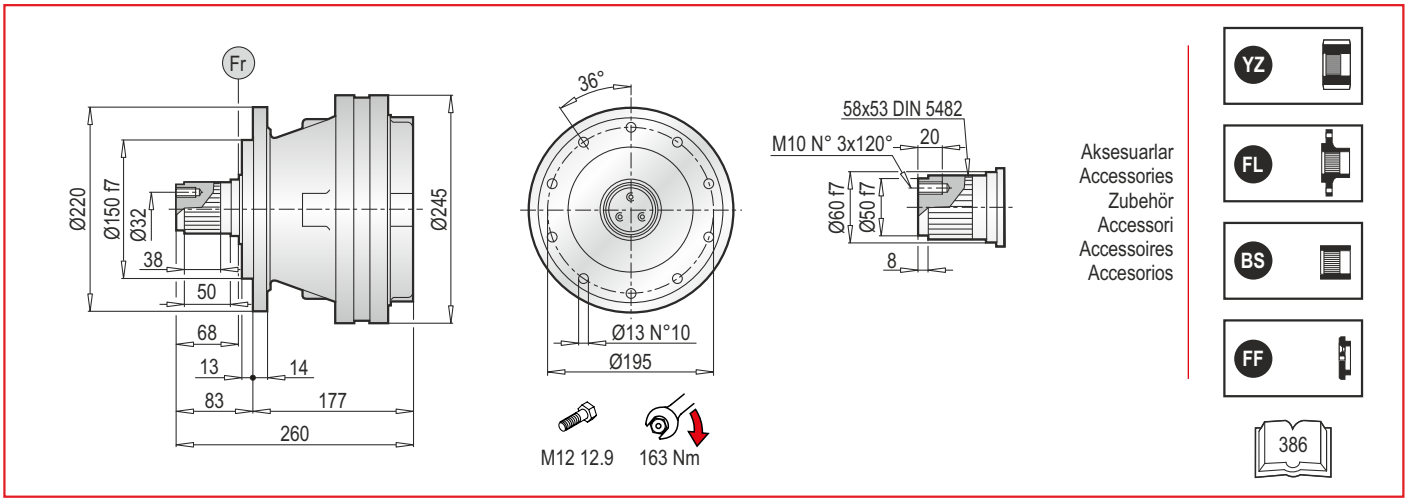

PL 5000 MS - Elektrik Motor Adaptörleri (IEC) / Electrıc Motor Couplings (IEC) / Anbauvorrichtung Für Elektromotore (IEC) / Predisposizioni Per Motori Elettrici (IEC) / Adaptations Pour Moteurs Electriques (IEC) / Acoplamientos Para Motores Eléctricos (IEC)

PL	IEC 63			IEC 71			IEC 80			IEC 90			IEC 100		
	LT	Z	ØD	LT	Z	ØD	LT	Z	ØD	LT	Z	ØD	LT	Z	ØD
5001	213	36	140	213	36	160	233	56	200	233	56	200	243	66	250
5002	274			274			294			294			304		
5003	322			322			342			342			352		
5004	370			370			390			390			400		

PL	IEC 112			IEC 132			IEC 160			IEC 180		
	LT	Z	ØD	LT	Z	ØD	LT	Z	ØD	LT	Z	ØD
5001	243	66	250	277	100	300	316	139	350	316	139	350
5002	304			338			377			-		
5003	352			386			425			-		
5004	400			434	-		-			-		

PL	IEC ~ Kg								
	63	71	80	90	100	112	132	160	180
5001	39	39	41	41	42	42	46	56	56
5002	47	47	49	49	50	50	54	64	-
5003	53	53	55	55	56	56	60	70	-
5004	59	59	61	61	62	62	-	-	-

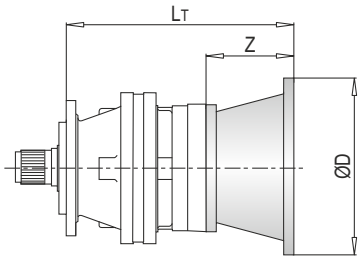

PL 5000 MS - Giriş Milleri / Input Shafts / Antriebswellen / Alberi Entrata / Arbres D'entree / Ejes De Entrada

PL	EL C 28				EL C 42				EML 42				EML 1"3/8 Z6				EM 65				EM 1"3/8 Z6			
	LT	Z	L	Ød	LT	Z	L	Ød	LT	Z	L	Ød	LT	Z	L	Ød	LT	Z	L	Ød	LT	Z	L	Ød
5001	241	64	50	28	241	64	82	42	271	94	82	42	271	94	106	1"3/8	312	121.5	105	65	312	121.5	105	1"3/8
5002	302				302				332				332				-				-			
5003	350				350				380				380				-				-			
5004	398				398				428				428				-				-			

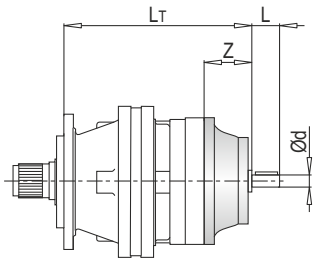

PL	EP 65			
	LT	Z	L	Ød
5001	343.5	153	105	65
5002	-			
5003	-			
5004	-			

PL	~ Kg						
	EL C 28	EL C 42	EML 42	EML 1"3/8 Z6	EM 65	EM 1"3/8 Z6	EP 65
5001	39.5	40.0	43.0	43.0	51.0	51.0	60.0
5002	47.5	48.0	51.0	51.0	-	-	-
5003	53.5	54.0	57.0	57.0	-	-	-
5004	59.5	60.0	63.0	63.0	-	-	-

PL 5000 MS - Sonsuz Dişlili Redüktör Adaptörleri (PMRV/PRV) / Worm Gearbox Adaptors (PMRV/PRV) / Anschluss Für Schneckengetriebe (PMRV/PRV) / Predisposizioni Per Riduttori A Vite Senza Fine (PMRV/PRV) / Adaptation Pour Reducteurs A Vis Sans Fin (PMRV/PRV) / Acoplamiento Para Reductores De Tornillo Sin Fin (PMRV/PRV)

PL	PMRV/PRV 050					PMRV/PRV 063					PMRV/PRV 075				
	LM	l	h	MA	G	LM	l	h	MA	G	LM	l	h	MA	G
5001	302.5	50	110	60	80	312	63	135	72	95	291	75	161	86	112.5
5002	363.5					473					352				
5003	411.5					421					400				
5004	459.5					469					448				

PL	PMRV/PRV 090					PMRV/PRV 110					PMRV/PRV 130				
	LM	l	h	MA	G	LM	l	h	MA	G	LM	l	h	MA	G
5001	301	90	193	103	129.5	328.5	110	237.5	127.5	160	336	130	277.5	147.5	180
5002	362					-					-				
5003	410					-					-				
5004	458					-					-				

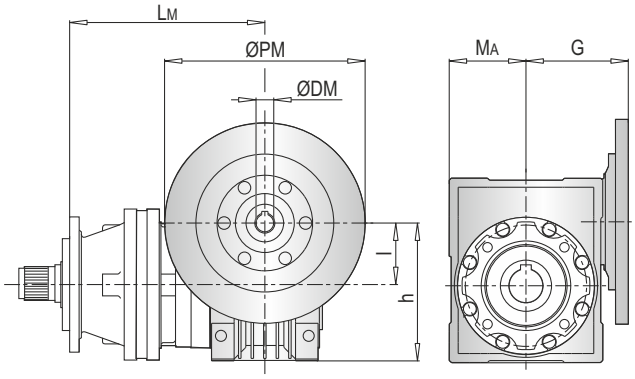

PL	PMRV/PRV ~ Kg					
	050	063	075	090	110	130
5001	42	45.5	48	53	80	97
5002	50	53.5	56	61	-	-
5003	56	59.5	62	67	-	-
5004	62	65.5	68	73	-	-

PLB 5000 MS - Elektrik Motor Adaptörleri (IEC) / Electric Motor Couplings (IEC) / Anbauvorrichtung Für Elektromotore (IEC) / Predisposizioni Per Motori Elettrici (IEC) / Adaptations Pour Moteurs Electriques (IEC) / Acoplamientos Para Motores Eléctricos (IEC)

PLB	IEC 80				IEC 90				IEC 100				IEC 112			
	A	LT	Z	ØD	A	LT	Z	ØD	A	LT	Z	ØD	A	LT	Z	ØD
5002	278.5	296	56	200	278.5	296	56	200	278.5	306	66	250	278.5	306	66	250
5003	313	216			313	216			313	226			313	226		
5004	361				361				361				361			

PLB	IEC 132				IEC 160			
	A	LT	Z	ØD	A	LT	Z	ØD
5002	278.5	340	100	300	278.5	379	139	350
5003	313	260			-			
5004	361				-			

PLB	IEC ~ Kg					
	80	90	100	112	132	160
5002	59	59	60	60	64	74
5003	67	67	68	68	72	-
5004	73	73	74	74	78	-

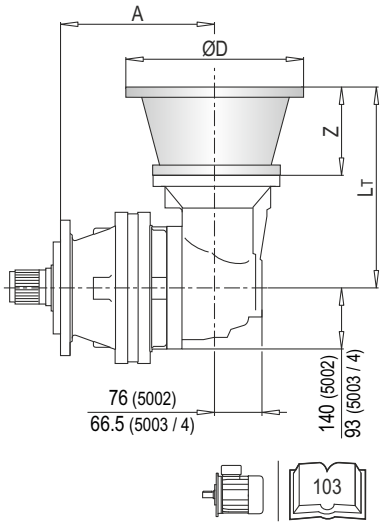

PLB 5000 MS - Giriş Milleri / Input Shafts / Antriebswellen / Alberi Entrata / Arbres D'entree / Ejes De Entrada

PLB	EL C 28					EL C 42					EML 42					EML 1"3/8 Z6					EM 65				
	A	LT	Z	L	Ød	A	LT	Z	L	Ød	A	LT	Z	L	Ød	A	LT	Z	L	Ød	A	LT	Z	L	Ød
5002	278.5	304	64	50	28	278.5	304	64	82	42	278.5	334	94	82	42	278.5	334	94	106	1"3/8	278.5	377.5	121.5	105	65
5003	313	224				313	224				313	254				313	254				313	297.5			
5004	361					361					361					361					361				

PLB	EM 1"3/8 Z6					EP 65				
	A	LT	Z	L	Ød	A	LT	Z	L	Ød
5002	278.5	377.5	121.5	105	1"3/8	278.5	409	153	105	65
5003	313	297.5				313	329			
5004	361					361				

PLB	~ Kg						
	EL C 28	EL C 42	EML 42	EML 1"3/8 Z6	EM 65	EM 1"3/8 Z6	EP 65
5002	57.5	58.0	67.0	67.0	75.0	75.0	84.0
5003	65.5	66.0	75.0	75.0	83.0	83.0	92.0
5004	71.5	72.0	81.0	81.0	89.0	89.0	98.0

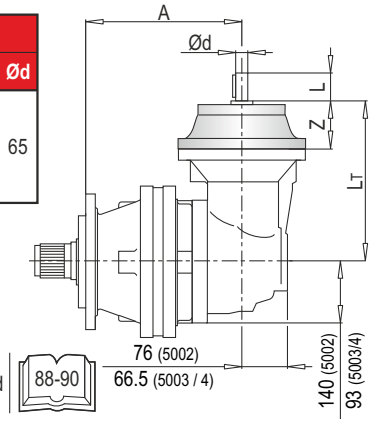

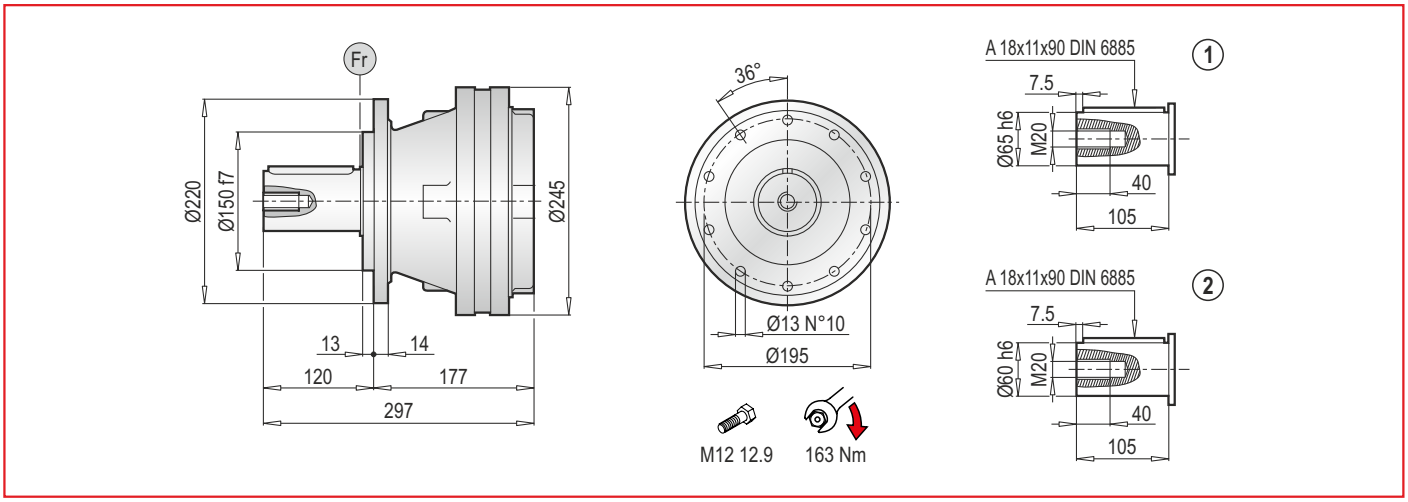

PL 5000 MC - Elektrik Motor Adaptörleri (IEC) / Electrıc Motor Couplings (IEC) /Anbauvorrichtung Für Elektromotore (IEC) / Predisposizioni Per Motori Elettrici (IEC) / Adaptations Pour Moteurs Electriques (IEC) /Acoplamientos Para Motores Eléctricos (IEC)

PL	IEC 63			IEC 71			IEC 80			IEC 90			IEC 100		
	LT	Z	ØD	LT	Z	ØD	LT	Z	ØD	LT	Z	ØD	LT	Z	ØD
5001	213	36	140	213	36	160	233	56	200	233	56	200	243	66	250
5002	274			274			294			294			304		
5003	322			322			342			342			352		
5004	370			370			390			390			400		

PL	IEC 112			IEC 132			IEC 160			IEC 180		
	LT	Z	ØD	LT	Z	ØD	LT	Z	ØD	LT	Z	ØD
5001	243	66	250	277	100	300	316	139	350	316	139	350
5002	304			338			377			-		
5003	352			386			425			-		
5004	400			434	-		-			-		

PL	IEC ~ Kg								
	63	71	80	90	100	112	132	160	180
5001	39	39	41	41	42	42	46	56	56
5002	47	47	49	49	50	50	54	64	-
5003	53	53	55	55	56	56	60	70	-
5004	59	59	61	61	62	62	-	-	-

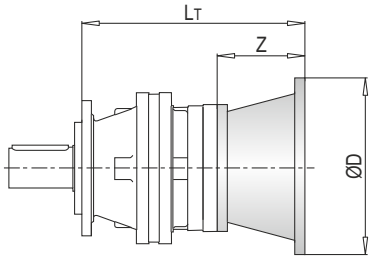

PL 5000 MC - Giriş Milleri / Input Shafts / Antriebswellen / Alberi Entrata / Arbres D'entree / Ejes De Entrada

PL	EL C 28				EL C 42				EML 42				EML 1"3/8 Z6				EM 65				EM 1"3/8 Z6			
	LT	Z	L	Ød	LT	Z	L	Ød	LT	Z	L	Ød	LT	Z	L	Ød	LT	Z	L	Ød	LT	Z	L	Ød
5001	241	64	50	28	241	64	82	42	271	94	82	42	271	94	106	1"3/8	312	121.5	105	65	312	121.5	105	1"3/8
5002	302				302				332				332				-				-			
5003	350				350				380				380				-				-			
5004	398				398				428				428				-				-			

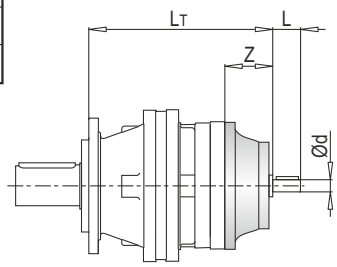

PL	EP 65			
	LT	Z	L	Ød
5001	343.5	153	105	65
5002	-			
5003	-			
5004	-			

PL	~ Kg						
	EL C 28	EL C 42	EML 42	EML 1"3/8 Z6	EM 65	EM 1"3/8 Z6	EP 65
5001	39.5	40.0	43.0	43.0	51.0	51.0	60.0
5002	47.5	48.0	51.0	51.0	-	-	-
5003	53.5	54.0	57.0	57.0	-	-	-
5004	59.5	60.0	63.0	63.0	-	-	-

PL 5000 MC - Sonsuz Dişlili Redüktör Adaptörleri (PMRV/PRV) / Worm Gearbox Adaptors (PMRV/PRV) / Anschluss Für Schneckengetriebe (PMRV/PRV) / Predisposizioni Per Riduttori A Vite Senza Fine (PMRV/PRV) / Adaptation Pour Reducteurs A Vis Sans Fin (PMRV/PRV) / Acoplamiento Para Reductores De Tornillo Sin Fin (PMRV/PRV)

PL	PMRV/PRV 050					PMRV/PRV 063					PMRV/PRV 075				
	LM	l	h	MA	G	LM	l	h	MA	G	LM	l	h	MA	G
5001	302.5	50	110	60	80	312	63	135	72	95	291	75	161	86	112.5
5002	363.5					473					352				
5003	411.5					421					400				
5004	459.5					469					448				

PL	PMRV/PRV 090					PMRV/PRV 110					PMRV/PRV 130				
	LM	l	h	MA	G	LM	l	h	MA	G	LM	l	h	MA	G
5001	301	90	193	103	129.5	328.5	110	237.5	127.5	160	336	130	277.5	147.5	180
5002	362					-					-				
5003	410					-					-				
5004	458					-					-				

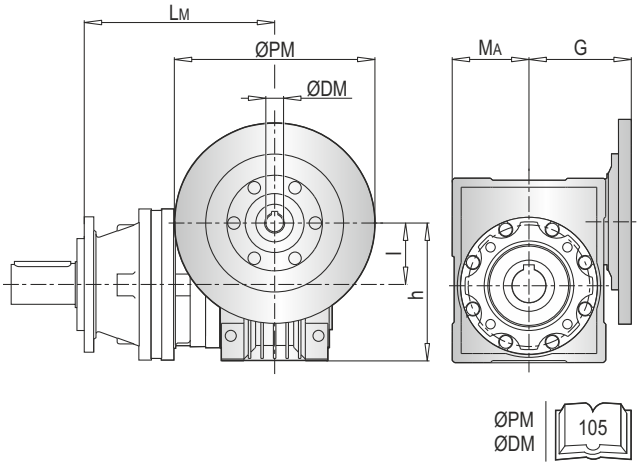

PL	PMRV/PRV ~ Kg					
	050	063	075	090	110	130
5001	42	45.5	48	53	80	97
5002	50	53.5	56	61	-	-
5003	56	59.5	62	67	-	-
5004	62	65.5	68	73	-	-

PLB 5000 MC - Elektrik Motor Kaplinleri (IEC) / Electric Motor Couplings (IEC) /Anbauvorrichtung Für Elektromotore (IEC) / Predisposizioni Per Motori Elettrici (IEC) / Adaptations Pour Moteurs Electriques (IEC) /Acoplamientos Para Motores Eléctricos (IEC)

PLB	IEC 80				IEC 90				IEC 100				IEC 112			
	A	LT	Z	ØD	A	LT	Z	ØD	A	LT	Z	ØD	A	LT	Z	ØD
5002	278.5	296	56	200	278.5	296	56	200	278.5	306	66	250	278.5	306	66	250
5003	313	216			313	216			313	226			313	226		
5004	361				361				361				361			

PLB	IEC 132				IEC 160			
	A	LT	Z	ØD	A	LT	Z	ØD
5002	278.5	340	100	300	278.5	379	139	350
5003	313	260			-			
5004	361				-			

PLB	IEC ~ Kg					
	80	90	100	112	132	160
5002	59	59	60	60	64	74
5003	67	67	68	68	72	-
5004	73	73	74	74	78	-

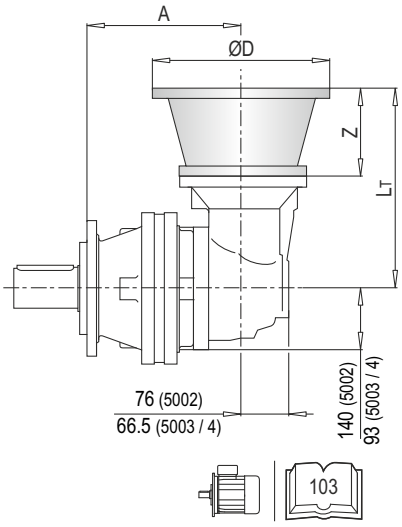

PLB 5000 MC - Giriş Milleri / Input Shafts / Antriebswellen / Alberi Entrata / Arbres D'entree / Ejes De Entrada

PLB	EL C 28					EL C 42					EML 42					EML 1"3/8 Z6					EM 65				
	A	LT	Z	L	Ød	A	LT	Z	L	Ød	A	LT	Z	L	Ød	A	LT	Z	L	Ød	A	LT	Z	L	Ød
5002	278.5	304	64	50	28	278.5	304	64	82	42	278.5	334	94	82	42	278.5	334	94	106	1"3/8	278.5	377.5	121.5	105	65
5003	313	224				313	224				313	254				313	254				313	297.5			
5004	361					361					361					361					361				

PLB	EM 1"3/8 Z6					EP 65				
	A	LT	Z	L	Ød	A	LT	Z	L	Ød
5002	278.5	377.5	121.5	105	1"3/8	278.5	409	153	105	65
5003	313	297.5				313	329			
5004	361					361				

PLB	~ Kg						
	EL C 28	EL C 42	EML 42	EML 1"3/8 Z6	EM 65	EM 1"3/8 Z6	EP 65
5002	57.5	58.0	67.0	67.0	75.0	75.0	84.0
5003	65.5	66.0	75.0	75.0	83.0	83.0	92.0
5004	71.5	72.0	81.0	81.0	89.0	89.0	98.0

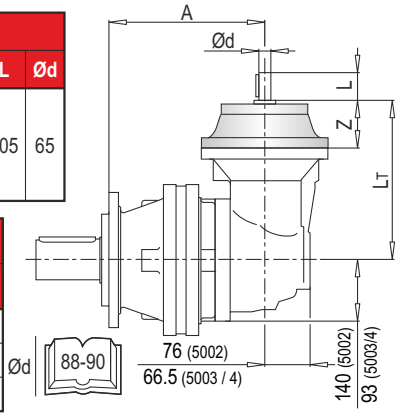

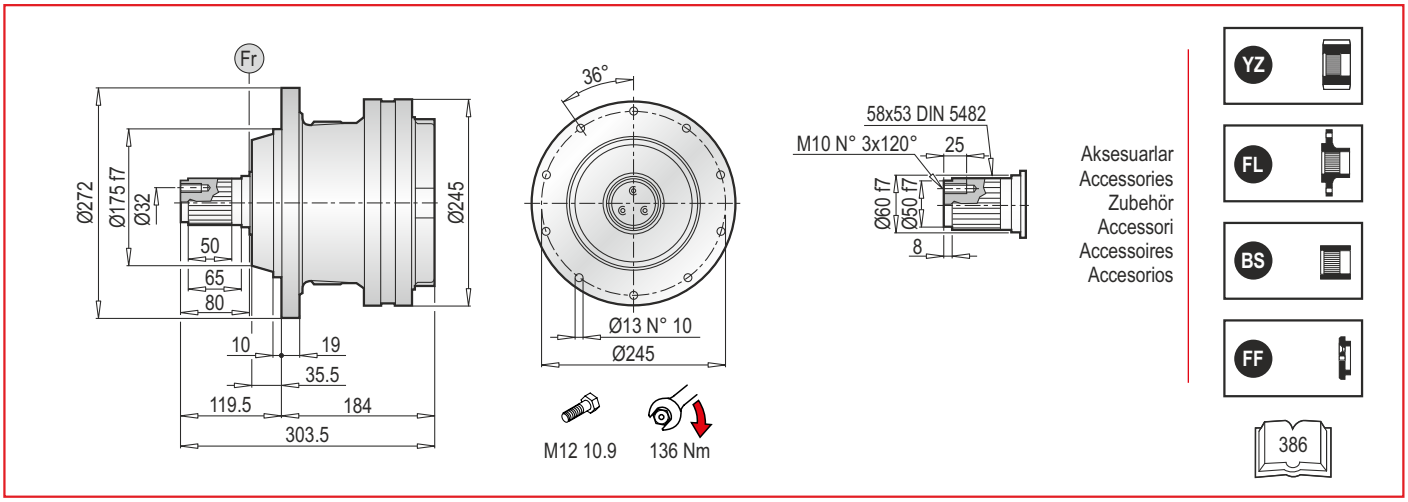

PL 5000 PS - Elektrik Motor Adaptörleri (IEC) / Electric Motor Couplings (IEC) / Anbauvorrichtung Für Elektromotore (IEC) / Predisposizioni Per Motori Elettrici (IEC) / Adaptations Pour Moteurs Electriques (IEC) / Acoplamientos Para Motores Eléctricos (IEC)

PL	IEC 63			IEC 71			IEC 80			IEC 90			IEC 100		
	LT	Z	ØD	LT	Z	ØD	LT	Z	ØD	LT	Z	ØD	LT	Z	ØD
5001	220	36	140	220	36	160	240	56	200	240	56	200	250	66	250
5002	281			281			301			301			311		
5003	329			329			349			349			359		
5004	377			377			397			397			407		

PL	IEC 112			IEC 132			IEC 160			IEC 180		
	LT	Z	ØD	LT	Z	ØD	LT	Z	ØD	LT	Z	ØD
5001	250	66	250	284	100	300	323	139	350	323	139	350
5002	311			345			384			-		
5003	359			393			432			-		
5004	407			441	-		-			-		

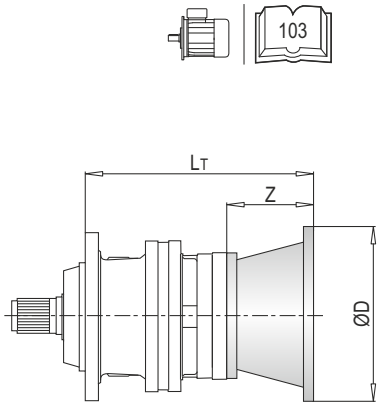

PL	IEC ~ Kg								
	63	71	80	90	100	112	132	160	180
5001	48	48	50	50	51	51	55	65	56
5002	56	56	58	58	59	59	63	73	-
5003	62	62	64	64	65	65	69	79	-
5004	68	68	70	70	71	71	-	-	-

PL 5000 PS - Giriş Milleri / Input Shafts / Antriebswellen / Alberi Entrata / Arbres D'entree / Ejes De Entrada

PL	EL C 28				EL C 42				EML 42				EML 1"3/8 Z6				EM 65				EM 1"3/8 Z6			
	LT	Z	L	Ød	LT	Z	L	Ød	LT	Z	L	Ød	LT	Z	L	Ød	LT	Z	L	Ød	LT	Z	L	Ød
5001	248	64	50	28	248	64	82	42	278	94	82	42	278	94	106	1"3/8	319	121.5	105	65	319	121.5	105	1"3/8
5002	309				309				339				339				-				-			
5003	357				357				387				387				-				-			
5004	405				405				435				435				-				-			

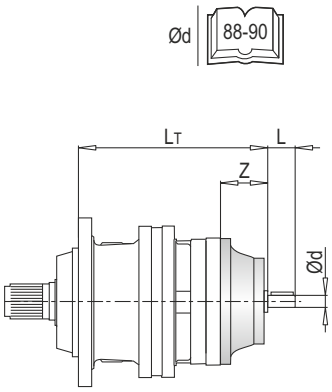

PL	EP 65			
	LT	Z	L	Ød
5001	350.5	153	105	65
5002	-			
5003	-			
5004	-			

PL	~ Kg						
	EL C 28	EL C 42	EML 42	EML 1"3/8 Z6	EM 65	EM 1"3/8 Z6	EP 65
5001	48.5	49.0	52.0	52.0	60.0	60.0	69.0
5002	56.5	57.0	60.0	60.0	-	-	-
5003	62.5	63.0	66.0	66.0	-	-	-
5004	68.5	69.0	72.0	72.0	-	-	-

PL 5000 PS - Sonsuz Dişlili Redüktör Adaptörleri (PMRV/PRV) / Worm Gearbox Adaptors (PMRV/PRV) / Anschluss Für Schneckengetriebe (PMRV/PRV) / Predisposizioni Per Riduttori A Vite Senza Fine (PMRV/PRV) / Adaptation Pour Reducteurs A Vis Sans Fin (PMRV/PRV) / Acoplamiento Para Reductores De Tornillo Sin Fin (PMRV/PRV)

PL	PMRV/PRV 050					PMRV/PRV 063					PMRV/PRV 075				
	LM	l	h	MA	G	LM	l	h	MA	G	LM	l	h	MA	G
5001	309.5	50	110	60	80	319	63	135	72	95	298	75	161	86	112.5
5002	370.5					380					359				
5003	418.5					428					407				
5004	466.5					476					455				

PL	PMRV/PRV 090					PMRV/PRV 110					PMRV/PRV 130				
	LM	l	h	MA	G	LM	l	h	MA	G	LM	l	h	MA	G
5001	308	90	193	103	129.5	335.5	110	237.5	127.5	160	343	130	277.5	147.5	180
5002	369					-					-				
5003	417					-					-				
5004	465					-					-				

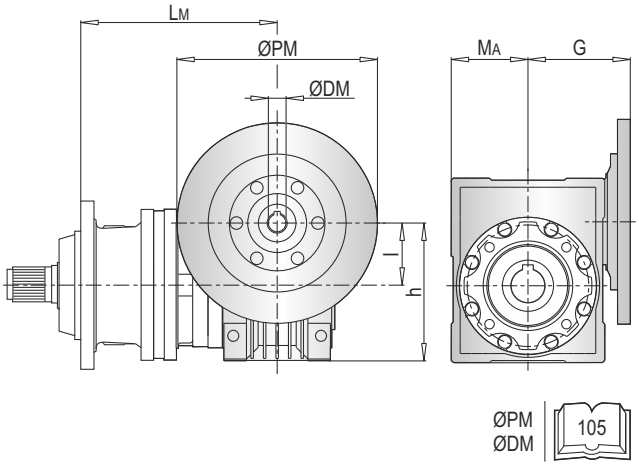

PL	PMRV/PRV ~ Kg					
	050	063	075	090	110	130
5001	51	54.5	57	62	89	106
5002	59	62.5	65	70	-	-
5003	65	68.5	71	76	-	-
5004	71	74.5	77	82	-	-

PLB 5000 PS - Elektrik Motor Adaptörleri (IEC) / Electric Motor Couplings (IEC) / Anbauvorrichtung Für Elektromotore (IEC) / Predisposizioni Per Motori Elettrici (IEC) / Adaptations Pour Moteurs Electriques (IEC) / Acoplamientos Para Motores Eléctricos (IEC)

PLB	IEC 80				IEC 90				IEC 100				IEC 112			
	A	LT	Z	ØD	A	LT	Z	ØD	A	LT	Z	ØD	A	LT	Z	ØD
5002	285.5	296	56	200	285.5	296	56	200	285.5	306	66	250	285.5	306	66	250
5003	320	216			320	216			320	226			320	226		
5004	368				368				368				368			

PLB	IEC 132				IEC 160			
	A	LT	Z	ØD	A	LT	Z	ØD
5002	285.5	340	100	300	285.5	379	139	350
5003	320	260			-			
5004	368				-			

PLB	IEC ~ Kg					
	80	90	100	112	132	160
5002	68	68	69	69	73	83
5003	76	76	77	77	81	-
5004	82	82	83	83	87	-

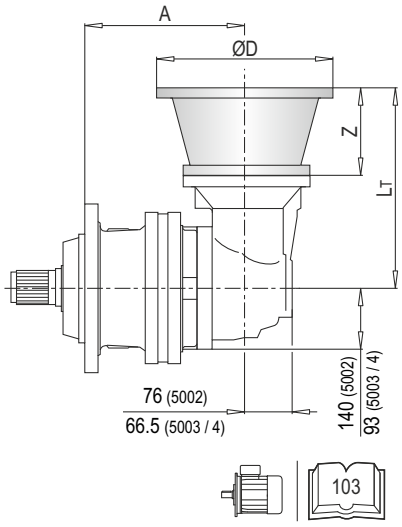

PLB 5000 PS - Giriş Milleri / Input Shafts / Antriebswellen / Alberi Entrata / Arbres D'entree / Ejes De Entrada

PLB	EL C 28					EL C 42					EML 42					EML 1"3/8 Z6					EM 65				
	A	LT	Z	L	Ød	A	LT	Z	L	Ød	A	LT	Z	L	Ød	A	LT	Z	L	Ød	A	LT	Z	L	Ød
5002	285.5	304	64	50	28	285.5	304	64	82	42	285.5	334	94	82	42	285.5	334	94	106	1"3/8	285.5	377.5	121.5	105	65
5003	320	224				320	224				320	254				320	254				320	297.5			
5004	368					368					368					368					368				

PLB	EM 1"3/8 Z6					EP 65				
	A	LT	Z	L	Ød	A	LT	Z	L	Ød
5002	285.5	377.5	121.5	105	1"3/8	285.5	409	153	105	65
5003	320	297.5				320	329			
5004	368					368				

PLB	~ Kg						
	EL C 28	EL C 42	EML 42	EML 1"3/8 Z6	EM 65	EM 1"3/8 Z6	EP 65
5002	66.5	67.0	70.0	70.0	78.0	78.0	87.0
5003	74.5	75.0	78.0	78.0	86.0	86.0	95.0
5004	80.5	81.0	84.0	84.0	92.0	92.0	101.0

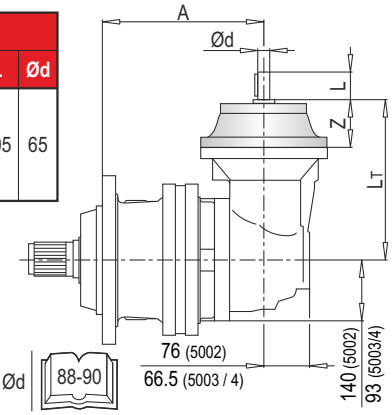

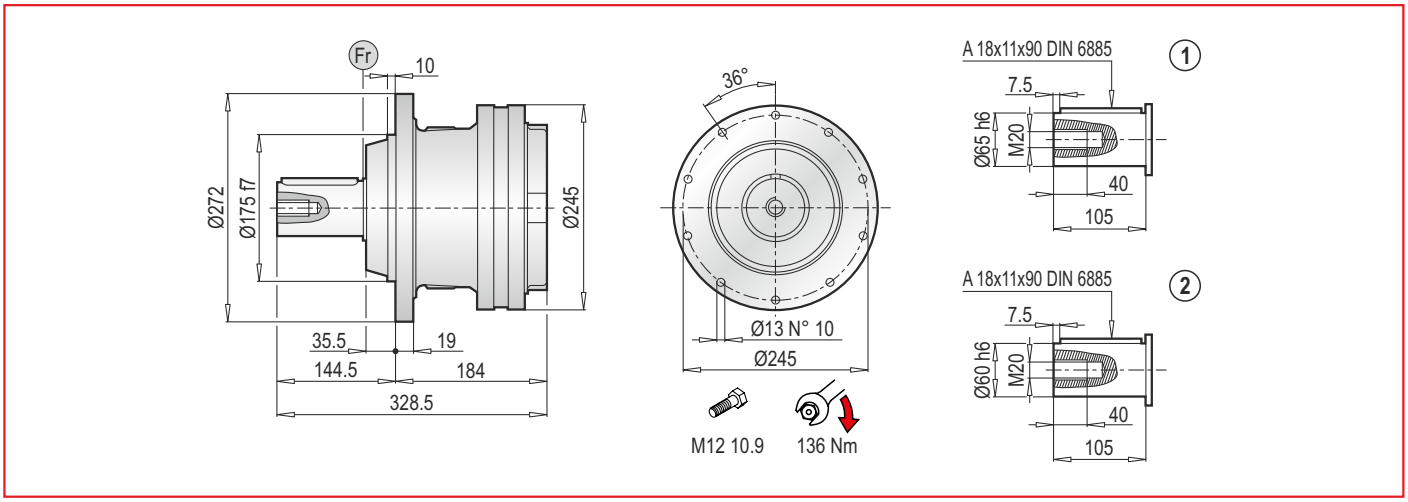

PL 5000 PC - Elektrik Motor Adaptörleri (IEC) / Electric Motor Couplings (IEC) / Anbauvorrichtung Für Elektromotore (IEC) / Predisposizioni Per Motori Elettrici (IEC) / Adaptations Pour Moteurs Electriques (IEC) / Acoplamientos Para Motores Eléctricos (IEC)

PL	IEC 63			IEC 71			IEC 80			IEC 90			IEC 100		
	LT	Z	ØD	LT	Z	ØD	LT	Z	ØD	LT	Z	ØD	LT	Z	ØD
5001	220	36	140	220	36	160	240	56	200	240	56	200	250	66	250
5002	281			281			301			301			311		
5003	329			329			349			349			359		
5004	377			377			397			397			407		

PL	IEC 112			IEC 132			IEC 160			IEC 180		
	LT	Z	ØD	LT	Z	ØD	LT	Z	ØD	LT	Z	ØD
5001	250	66	250	284	100	300	323	139	350	323	139	350
5002	311			345			384			-		
5003	359			393			432			-		
5004	407			441	-		-			-		

PL	IEC ~ Kg								
	63	71	80	90	100	112	132	160	180
5001	48	48	50	50	51	51	55	65	56
5002	56	56	58	58	59	59	63	73	-
5003	62	62	64	64	65	65	69	79	-
5004	68	68	70	70	71	71	-	-	-

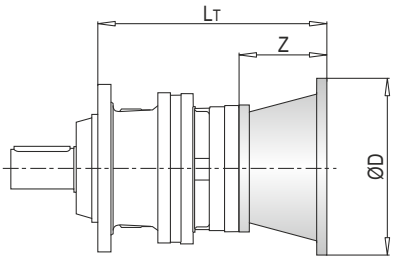

PL 5000 PC - Giriş Milleri / Input Shafts / Antriebswellen / Alberi Entrata / Arbres D'entree / Ejes De Entrada

PL	EL C 28				EL C 42				EML 42				EML 1"3/8 Z6				EM 65				EM 1"3/8 Z6			
	LT	Z	L	Ød	LT	Z	L	Ød	LT	Z	L	Ød	LT	Z	L	Ød	LT	Z	L	Ød	LT	Z	L	Ød
5001	248	64	50	28	248	64	82	42	278	94	82	42	278	94	106	1"3/8	319	121.5	105	65	319	121.5	105	1"3/8
5002	309				309				339				339				-				-			
5003	357				357				387				387				-				-			
5004	405				405				435				435				-				-			

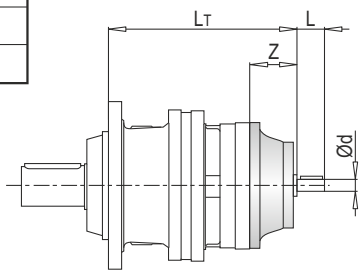

PL	EP 65			
	LT	Z	L	Ød
5001	350.5	153	105	65
5002	-			
5003	-			
5004	-			

PL	~ Kg						
	EL C 28	EL C 42	EML 42	EML 1"3/8 Z6	EM 65	EM 1"3/8 Z6	EP 65
5001	48.5	49.0	52.0	52.0	60.0	60.0	69.0
5002	56.5	57.0	60.0	60.0	-	-	-
5003	62.5	63.0	66.0	66.0	-	-	-
5004	68.5	69.0	72.0	72.0	-	-	-

PL 5000 PC - Sonsuz Dişlili Redüktör Adaptörleri (PMRV/PRV) / Worm Gearbox Adaptors (PMRV/PRV) / Anschluss Für Schneckengetriebe (PMRV/PRV) / Predisposizioni Per Riduttori A Vite Senza Fine (PMRV/PRV) / Adaptation Pour Reducteurs A Vis Sans Fin (PMRV/PRV) / Acoplamiento Para Reductores De Tornillo Sin Fin (PMRV/PRV)

PL	PMRV/PRV 050					PMRV/PRV 063					PMRV/PRV 075				
	LM	l	h	MA	G	LM	l	h	MA	G	LM	l	h	MA	G
5001	309.5	50	110	60	80	319	63	135	72	95	298	75	161	86	112.5
5002	370.5					380					359				
5003	418.5					428					407				
5004	466.5					476					455				

PL	PMRV/PRV 090					PMRV/PRV 110					PMRV/PRV 130				
	LM	l	h	MA	G	LM	l	h	MA	G	LM	l	h	MA	G
5001	308	90	193	103	129.5	335.5	110	237.5	127.5	160	343	130	277.5	147.5	180
5002	369					-					-				
5003	417					-					-				
5004	465					-					-				

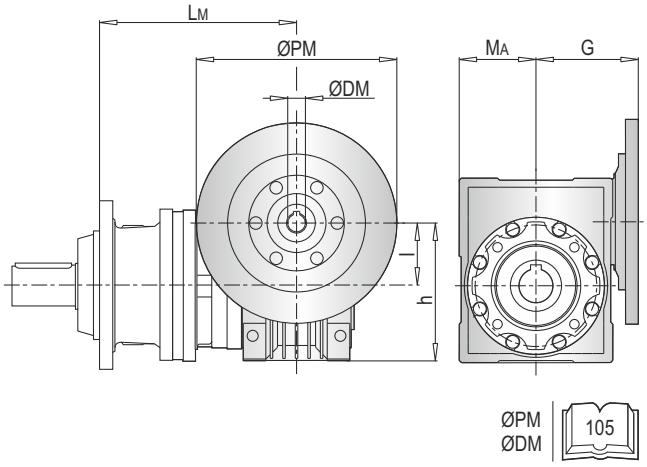

PL	PMRV/PRV ~ Kg					
	050	063	075	090	110	130
5001	51	54.5	57	62	89	106
5002	59	62.5	65	70	-	-
5003	65	68.5	71	76	-	-
5004	71	74.5	77	82	-	-

PLB 5000 PC - Elektrik Motor Adaptörleri (IEC) / Electric Motor Couplings (IEC) / Anbauvorrichtung Für Elektromotore (IEC) / Predisposizioni Per Motori Elettrici (IEC) / Adaptations Pour Moteurs Electriques (IEC) / Acoplamientos Para Motores Eléctricos (IEC)

PLB	IEC 80				IEC 90				IEC 100				IEC 112			
	A	LT	Z	ØD	A	LT	Z	ØD	A	LT	Z	ØD	A	LT	Z	ØD
5002	285.5	296	56	200	285.5	296	56	200	285.5	306	66	250	285.5	306	66	250
5003	320	216			320	216			320	226			320	226		
5004	368				368				368				368			

PLB	IEC 132				IEC 160			
	A	LT	Z	ØD	A	LT	Z	ØD
5002	285.5	340	100	300	285.5	379	139	350
5003	320	260			-			
5004	368				-			

PLB	IEC ~ Kg					
	80	90	100	112	132	160
5002	68	68	69	69	73	83
5003	76	76	77	77	81	-
5004	82	82	83	83	87	-

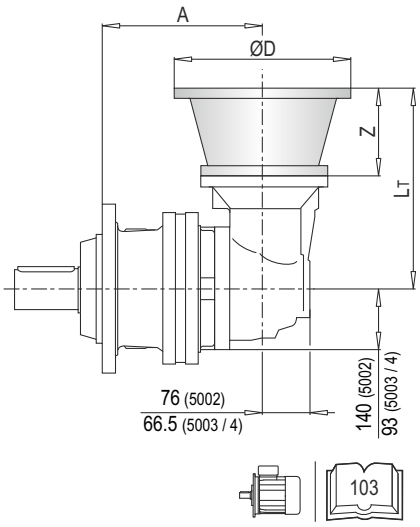

PLB 5000 PC - Giriş Milleri / Input Shafts / Antriebswellen / Alberi Entrata / Arbres D'entree / Ejes De Entrada

PLB	EL C 28					EL C 42					EML 42					EML 1"3/8 Z6					EM 65				
	A	LT	Z	L	Ød	A	LT	Z	L	Ød	A	LT	Z	L	Ød	A	LT	Z	L	Ød	A	LT	Z	L	Ød
5002	285.5	304	64	50	28	285.5	304	64	82	42	285.5	334	94	82	42	285.5	334	94	106	1"3/8	285.5	377.5	121.5	105	65
5003	320	224				320	224				320	254				320	254				320	297.5			
5004	368					368					368					368					368				

PLB	EM 1"3/8 Z6					EP 65				
	A	LT	Z	L	Ød	A	LT	Z	L	Ød
5002	285.5	377.5	121.5	105	1"3/8	285.5	409	153	105	65
5003	320	297.5				320	329			
5004	368					368				

PLB	~ Kg						
	EL C 28	EL C 42	EML 42	EML 1"3/8 Z6	EM 65	EM 1"3/8 Z6	EP 65
5002	66.5	67.0	70.0	70.0	78.0	78.0	87.0
5003	74.5	75.0	78.0	78.0	86.0	86.0	95.0
5004	80.5	81.0	84.0	84.0	92.0	92.0	101.0

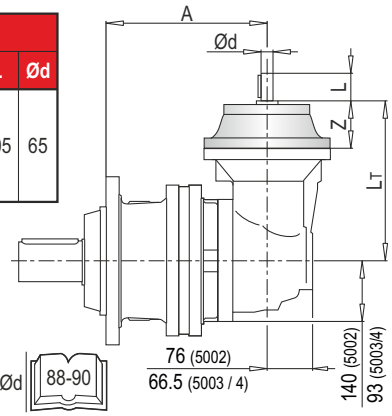

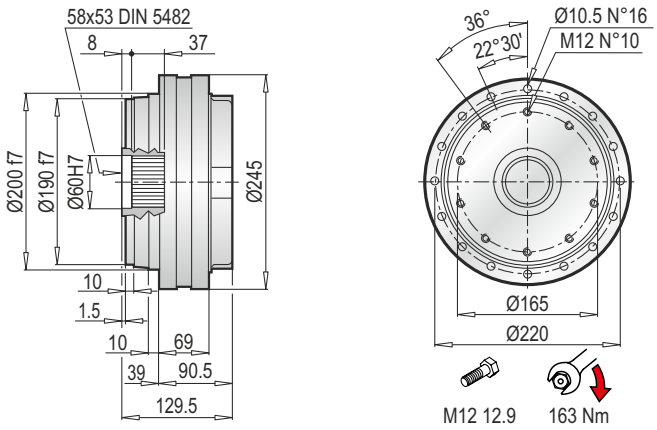

Aksesuarlar
Accessories
Zubehör
Accessori
Accessoires
Accesorios

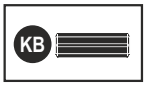

PL 5000 F - Elektrik Motor Adaptörleri (IEC) / Electrıc Motor Couplings (IEC) / Anbauvorrichtung Für Elektromotore (IEC) / Predisposizioni Per Motori Elettrici (IEC) / Adaptations Pour Moteurs Electriques (IEC) / Acoplamientos Para Motores Eléctricos (IEC)

PL	IEC 63			IEC 71			IEC 80			IEC 90			IEC 100		
	LT	Z	ØD	LT	Z	ØD	LT	Z	ØD	LT	Z	ØD	LT	Z	ØD
5001	126.5	36	140	126.5	36	160	146.5	56	200	146.5	56	200	156.5	66	250
5002	187.5			187.5			207.5			207.5			217.5		
5003	235.5			235.5			255.5			255.5			265.5		
5004	283.5			283.5			303.5			303.5			313.5		

PL	IEC 112			IEC 132			IEC 160			IEC 180		
	LT	Z	ØD	LT	Z	ØD	LT	Z	ØD	LT	Z	ØD
5001	156.5	66	250	190.5	100	300	229.5	139	350	229.5	139	350
5002	217.5			251.5			290.5			-		
5003	265.5			299.5			338.5			-		
5004	313.5			347.5	-		-			-		

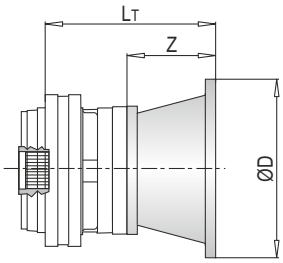

PL	IEC ~ Kg								
	63	71	80	90	100	112	132	160	180
5001	31	31	33	33	34	34	38	48	48
5002	38	38	40	40	41	41	45	55	-
5003	44	44	46	46	47	47	51	61	-
5004	50	50	52	52	53	53	-	-	-

PL 5000 F - Giriş Milleri / Input Shafts / Antriebswellen / Alberi Entrata / Arbres D'entree / Ejes De Entrada

PL	EL C 28				EL C 42				EML 42				EML 1"3/8 Z6				EM 65				EM 1"3/8 Z6			
	LT	Z	L	Ød	LT	Z	L	Ød	LT	Z	L	Ød	LT	Z	L	Ød	LT	Z	L	Ød	LT	Z	L	Ød
5001	154.5	64	50	28	154.5	64	82	42	184.5	94	82	42	184.5	94	106	1"3/8	225.5	121.5	105	65	225.5	121.5	105	1"3/8
5002	215.5				215.5				245.5				245.5				-				-			
5003	263.5				263.5				293.5				293.5				-				-			
5004	311.5				311.5				341.5				341.5				-				-			

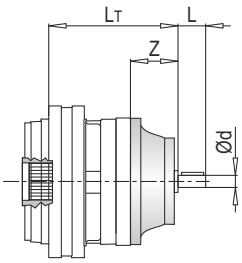

PL	EP 65			
	LT	Z	L	Ød
5001	257	153	105	65
5002	-			
5003	-			
5004	-			

PL	~ Kg						
	EL C 28	EL C 42	EML 42	EML 1"3/8 Z6	EM 65	EM 1"3/8 Z6	EP 65
5001	31.5	32.0	35.0	35.0	43.0	43.0	52.0
5002	38.5	39.0	42.0	42.0	-	-	-
5003	44.5	45.0	48.0	48.0	-	-	-
5004	50.5	51.0	54.0	54.0	-	-	-

PL 5000 F - Sonsuz Dişlili Redüktör Adaptörleri (PMRV/PRV) / Worm Gearbox Adaptors (PMRV/PRV) / Anschluss Für Schneckengetriebe (PMRV/PRV) / Predisposizioni Per Riduttori A Vite Senza Fine (PMRV/PRV) / Adaptation Pour Reducteurs A Vis Sans Fin (PMRV/PRV) / Acoplamiento Para Reductores De Tornillo Sin Fin (PMRV/PRV)

PL	PMRV/PRV 050					PMRV/PRV 063					PMRV/PRV 075				
	LM	l	h	MA	G	LM	l	h	MA	G	LM	l	h	MA	G
5001	216	50	110	60	80	225.5	63	135	72	95	204.5	75	161	86	112.5
5002	277					286.5					265.5				
5003	285					334.5					313.5				
5004	373					382.5					361.5				

PL	PMRV/PRV 090					PMRV/PRV 110					PMRV/PRV 130				
	LM	l	h	MA	G	LM	l	h	MA	G	LM	l	h	MA	G
5001	214.5	90	193	103	129.5	242	110	237.5	127.5	160	249.5	130	277.5	147.5	180
5002	275.5					-					-				
5003	323.5					-					-				
5004	371.5					-					-				

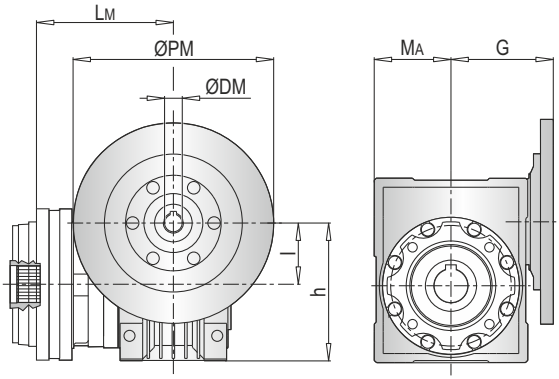

PL	PMRV/PRV ~ Kg					
	050	063	075	090	110	130
5001	34	37.5	40	45	72	89
5002	41	44.5	47	52	-	-
5003	47	50.5	53	58	-	-
5004	53	56.5	59	64	-	-

PLB 5000 F - Elektrik Motor Adaptörleri (IEC) / Electric Motor Couplings (IEC) / Anbauvorrichtung Für Elektromotore (IEC) / Predisposizioni Per Motori Elettrici (IEC) / Adaptations Pour Moteurs Electriques (IEC) / Acoplamientos Para Motores Eléctricos (IEC)

PLB	IEC 80				IEC 90				IEC 100				IEC 112			
	A	LT	Z	ØD	A	LT	Z	ØD	A	LT	Z	ØD	A	LT	Z	ØD
5002	192	296	56	200	192	296	56	200	192	306	66	250	192	306	66	250
5003	226.5	216			226.5	216			226.5	226			226.5	226		
5004	274.5				274.5				274.5				274.5			

PLB	IEC 132				IEC 160			
	A	LT	Z	ØD	A	LT	Z	ØD
5002	192	340	100	300	192	379	139	350
5003	226.5	260			-			
5004	274.5				-			

PLB	IEC ~ Kg					
	80	90	100	112	132	160
5002	51	51	52	52	56	66
5003	58	58	59	59	63	-
5004	64	64	65	65	69	-

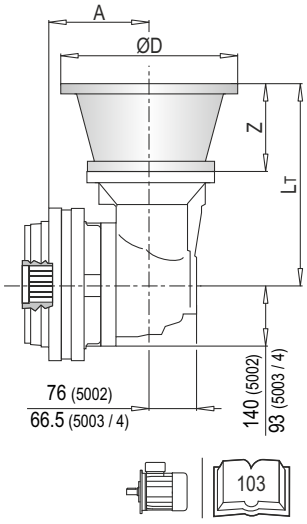

PLB 5000 F - Giriş Milleri / Input Shafts / Antriebswellen / Alberi Entrata / Arbres D'entree / Ejes De Entrada

PLB	EL C 28					EL C 42					EML 42					EML 1"3/8 Z6					EM 65				
	A	LT	Z	L	Ød	A	LT	Z	L	Ød	A	LT	Z	L	Ød	A	LT	Z	L	Ød	A	LT	Z	L	Ød
5002	192	304	64	50	28	192	304	64	82	42	192	334	94	82	42	192	334	94	106	1"3/8	192	377.5	121.5	105	65
5003	226.5	224				226.5	224				226.5	254				226.5	254				226.5	297.5			
5004	274.5					274.5					274.5					274.5					274.5				

PLB	EM 1"3/8 Z6					EP 65				
	A	LT	Z	L	Ød	A	LT	Z	L	Ød
5002	192	377.5	121.5	105	1"3/8	192	409	153	105	65
5003	226.5	297.5				226.5	329			
5004	274.5					274.5				

PLB	~ Kg						
	EL C 28	EL C 42	EML 42	EML 1"3/8 Z6	EM 65	EM 1"3/8 Z6	EP 65
5002	49.5	50.0	53.0	53.0	61.0	61.0	70.0
5003	56.5	57.0	60.0	60.0	68.0	68.0	77.0
5004	62.5	63.0	66.0	66.0	74.0	74.0	83.0

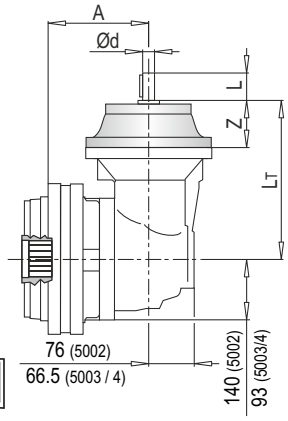

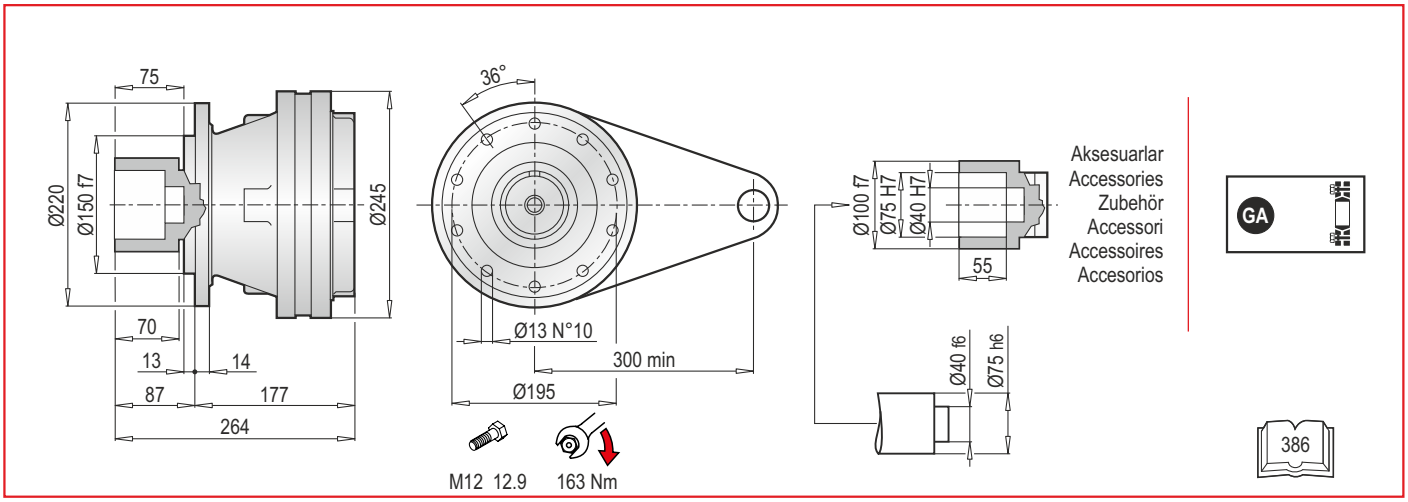

PL 5000 FS - Elektrik Motor Adaptörleri (IEC) / Electric Motor Couplings (IEC) / Anbauvorrichtung Für Elektromotore (IEC) / Predisposizioni Per Motori Elettrici (IEC) / Adaptations Pour Moteurs Electriques (IEC) / Acoplamientos Para Motores Eléctricos (IEC)

PL	IEC 63			IEC 71			IEC 80			IEC 90			IEC 100		
	LT	Z	ØD	LT	Z	ØD	LT	Z	ØD	LT	Z	ØD	LT	Z	ØD
5001	213	36	140	213	36	160	233	56	200	233	56	200	243	66	250
5002	274			274			294			294			304		
5003	322			322			342			342			352		
5004	370			370			390			390			400		

PL	IEC 112			IEC 132			IEC 160			IEC 180		
	LT	Z	ØD	LT	Z	ØD	LT	Z	ØD	LT	Z	ØD
5001	243	66	250	277	100	300	316	139	350	316	139	350
5002	304			338			377			-		
5003	352			386			425			-		
5004	400			434			-			-		

PL	IEC ~ Kg								
	63	71	80	90	100	112	132	160	180
5001	41	41	43	43	44	44	48	58	58
5002	49	49	51	51	52	52	56	66	-
5003	55	55	57	57	58	58	62	72	-
5004	61	61	63	63	64	64	68	-	-

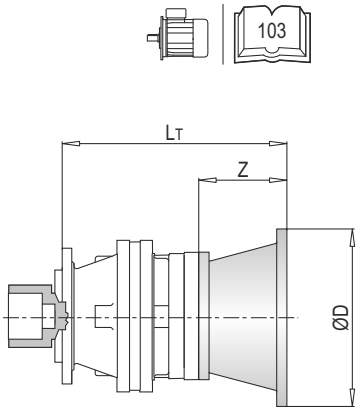

PL 5000 FS - Giriş Milleri / Input Shafts / Antriebswellen / Alberi Entrata / Arbres D'entree / Ejes De Entrada

PL	EL C 28				EL C 42				EML 42				EML 1"3/8 Z6				EM 65				EM 1"3/8 Z6			
	LT	Z	L	Ød	LT	Z	L	Ød	LT	Z	L	Ød	LT	Z	L	Ød	LT	Z	L	Ød	LT	Z	L	Ød
5001	241	64	50	28	241	64	82	42	271	94	82	42	271	94	106	1"3/8	312	121.5	105	65	312	121.5	105	1"3/8
5002	302				302				332				332				-				-			
5003	350				350				380				380				-				-			
5004	398				398				428				428				-				-			

PL	EP 65			
	LT	Z	L	Ød
5001	343.5	153	105	65
5002	-			
5003	-			
5004	-			

PL	~ Kg						
	EL C 28	EL C 42	EML 42	EML 1"3/8 Z6	EM 65	EM 1"3/8 Z6	EP 65
5001	41.5	42.0	45.0	45.0	53.0	53.0	62.0
5002	49.5	50.0	53.0	53.0	-	-	-
5003	55.5	56.0	59.0	59.0	-	-	-
5004	61.5	62.0	65.0	65.0	-	-	-

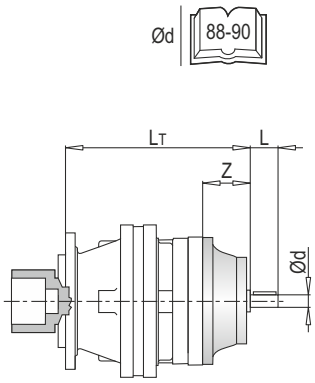

PL 5000 FS - Sonsuz Dişlili Redüktör Adaptörleri (PMRV/PRV) / Worm Gearbox Adaptors (PMRV/PRV) / Anschluss Für Schneckengetriebe (PMRV/PRV) / Predisposizioni Per Riduttori A Vite Senza Fine (PMRV/PRV) / Adaptation Pour Reducteurs A Vis Sans Fin (PMRV/PRV) / Acoplamiento Para Reductores De Tornillo Sin Fin (PMRV/PRV)

PL	PMRV/PRV 050					PMRV/PRV 063					PMRV/PRV 075				
	LM	l	h	MA	G	LM	l	h	MA	G	LM	l	h	MA	G
5001	302.5	50	110	60	80	312	63	135	72	95	291	75	161	86	112.5
5002	363.5					473					352				
5003	411.5					421					400				
5004	459.5					469					448				

PL	PMRV/PRV 090					PMRV/PRV 110					PMRV/PRV 130				
	LM	l	h	MA	G	LM	l	h	MA	G	LM	l	h	MA	G
5001	301	90	193	103	129.5	315	110	237.5	127.5	160	322.5	130	277.5	147.5	180
5002	362					-					-				
5003	410					-					-				
5004	458					-					-				

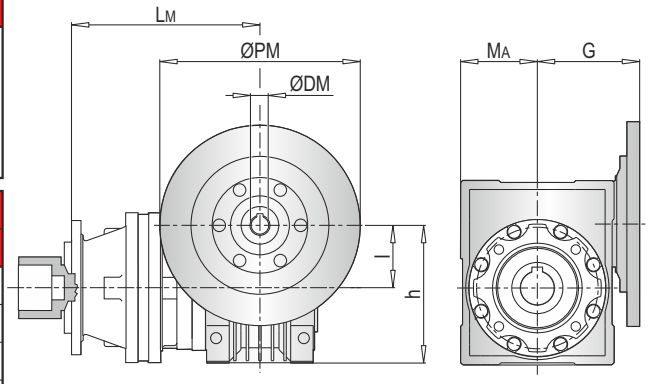

ØPM
ØDM
105

PL	PMRV/PRV ~ Kg					
	050	063	075	090	110	130
5001	44	47.5	50	55	82	99
5002	52	55.5	58	63	-	-
5003	58	61.5	64	69	-	-
5004	64	67.5	70	75	-	-

PLB 5000 FS - Elektrik Motor Adaptörleri (IEC) / Electric Motor Couplings (IEC) /Anbauvorrichtung Für Elektromotore (IEC) / Predisposizioni Per Motori Elettrici (IEC) / Adaptations Pour Moteurs Electriques (IEC) /Acoplamientos Para Motores Eléctricos (IEC)

PLB	IEC 80				IEC 90				IEC 100				IEC 112			
	A	LT	Z	ØD	A	LT	Z	ØD	A	LT	Z	ØD	A	LT	Z	ØD
5002	278.5	296	56	200	278.5	296	56	200	278.5	306	66	250	278.5	306	66	250
5003	313	216			313	216			313	226			313	226		
5004	361				361				361				361			

PLB	IEC 132				IEC 160			
	A	LT	Z	ØD	A	LT	Z	ØD
5002	278.5	340	100	300	278.5	379	139	350
5003	313	260			-			
5004	361				-			

PLB	IEC ~ Kg					
	80	90	100	112	132	160
5002	61	61	62	62	66	76
5003	69	69	70	70	74	-
5004	75	75	76	76	80	-

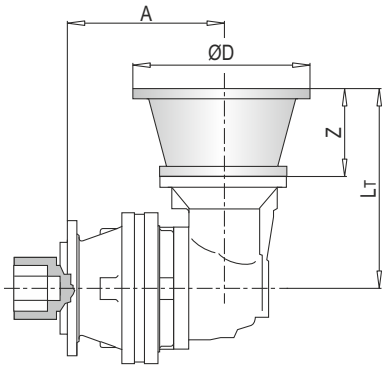

103

PLB 5000 FS - Giriş Milleri / Input Shafts / Antriebswellen / Alberi Entrata / Arbres D'entree / Ejes De Entrada

PLB	EL C 28					EL C 42					EML 42					EML 1"3/8 Z6					EM 65				
	A	LT	Z	L	Ød	A	LT	Z	L	Ød	A	LT	Z	L	Ød	A	LT	Z	L	Ød	A	LT	Z	L	Ød
5002	278.5	304	64	50	28	278.5	304	64	82	42	278.5	334	94	82	42	278.5	334	94	106	1"3/8	278.5	377.5	121.5	105	65
5003	313	224				313	224				313	254				313	254				313	297.5			
5004	361					361					361					361					361				

PLB	EM 1"3/8 Z6					EP 65				
	A	LT	Z	L	Ød	A	LT	Z	L	Ød
5002	278.5	377.5	121.5	105	1"3/8	278.5	409	153	105	65
5003	313	297.5				313	329			
5004	361					361				

PLB	~ Kg						
	EL C 28	EL C 42	EML 42	EML 1"3/8 Z6	EM 65	EM 1"3/8 Z6	EP 65
5002	59.5	60.0	63.0	63.0	71.0	71.0	80.0
5003	67.5	68.0	71.0	71.0	79.0	79.0	88.0
5004	73.5	74.0	77.0	77.0	85.0	85.0	94.0

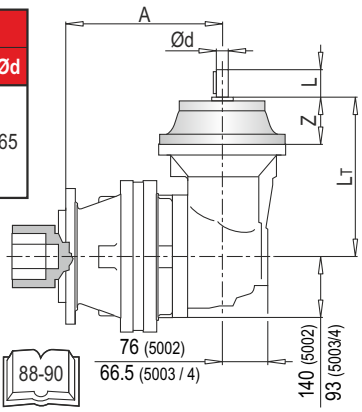

Ød 88-90

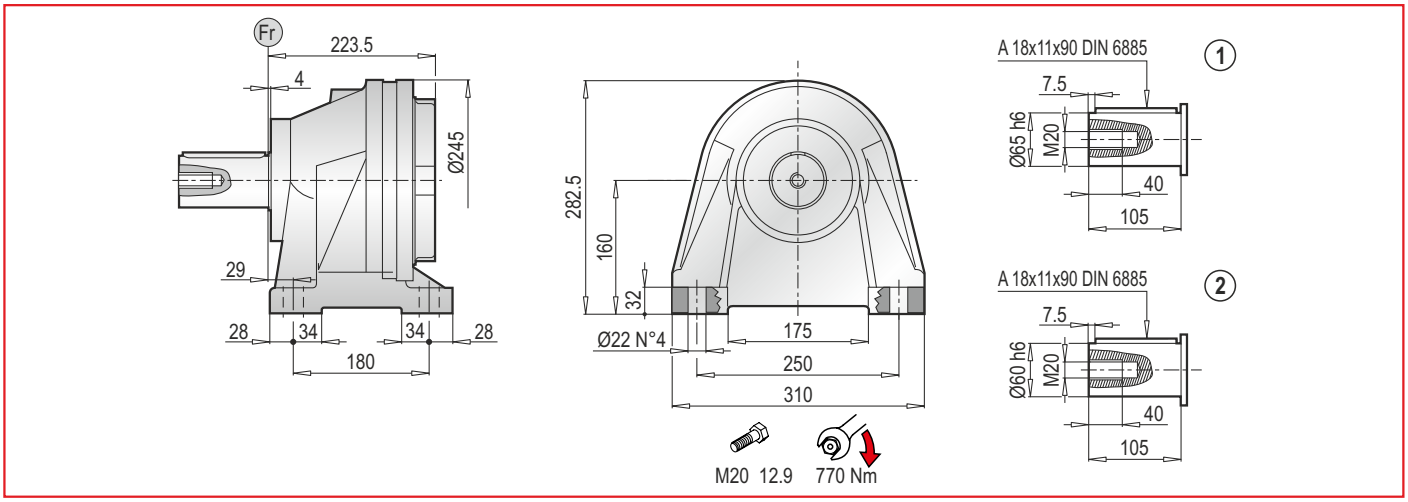

PL 5000 CPC - Elektrik Motor Adaptörleri (IEC) / Electrıc Motor Couplings (IEC) / Anbauvorrichtung Für Elektromotore (IEC) / Predisposizioni Per Motori Elettrici (IEC) / Adaptations Pour Moteurs Electriques (IEC) / Acoplamientos Para Motores Eléctricos (IEC)

PL	IEC 63			IEC 71			IEC 80			IEC 90			IEC 100		
	LT	Z	ØD	LT	Z	ØD	LT	Z	ØD	LT	Z	ØD	LT	Z	ØD
5001	259.5	36	140	259.5	36	160	279.5	56	200	279.5	56	200	289.5	66	250
5002	320.5			320.5			340.5			340.5			350.5		
5003	368.5			368.5			388.5			388.5			398.5		
5004	416.5			416.5			436.5			436.5			446.5		

PL	IEC 112			IEC 132			IEC 160			IEC 180		
	LT	Z	ØD	LT	Z	ØD	LT	Z	ØD	LT	Z	ØD
5001	289.5	66	250	323.5	100	300	362.5	139	350	362.5	139	350
5002	350.5			384.5			423.5			-		
5003	398.5			432.5			471.5			-		
5004	446.5			480.5			-			-		

PL	IEC ~ Kg								
	63	71	80	90	100	112	132	160	180
5001	52	52	54	54	55	55	59	69	69
5002	60	60	62	62	63	63	67	77	-
5003	66	66	68	68	69	69	73	83	-
5004	72	72	74	74	75	75	79	-	-

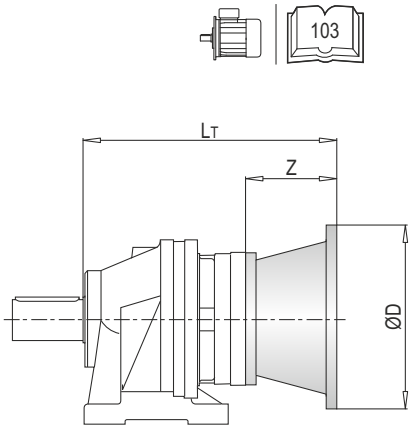

PL 5000 CPC - Giriş Milleri / Input Shafts / Antriebswellen / Alberi Entrata / Arbres D'entree / Ejes De Entrada

PL	EL C 28				EL C 42				EML 42				EML 1"3/8 Z6				EM 65				EM 1"3/8 Z6			
	LT	Z	L	Ød	LT	Z	L	Ød	LT	Z	L	Ød	LT	Z	L	Ød	LT	Z	L	Ød	LT	Z	L	Ød
5001	287.5	64	50	28	287.5	64	82	42	317.5	94	82	42	317.5	94	106	1"3/8	358.5	121.5	105	65	358.5	121.5	105	1"3/8
5002	348.5				348.5				378.5				378.5				-				-			
5003	396.5				396.5				426.5				426.5				-				-			
5004	444.5				444.5				474.5				474.5				-				-			

PL	EP 65			
	LT	Z	L	Ød
5001	390	153	105	65
5002	-			
5003	-			
5004	-			

PL	~ Kg						
	EL C 28	EL C 42	EML 42	EML 1"3/8 Z6	EM 65	EM 1"3/8 Z6	EP 65
5001	52.5	53.0	56.0	56.0	64.0	64.0	73.0
5002	60.5	61.0	64.0	64.0	-	-	-
5003	66.5	67.0	70.0	70.0	-	-	-
5004	72.5	73.0	76.0	76.0	-	-	-

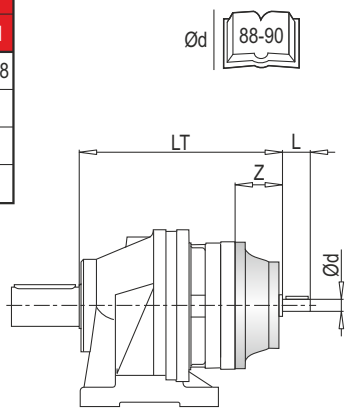

PL 5000 CPC - Sonsuz Dişlili Redüktör Adaptörleri (PMRV/PRV) / Worm Gearbox Adaptors (PMRV/PRV) / Anschluss Für Schneckengetriebe (PMRV/PRV) / Predisposizioni Per Riduttori A Vite Senza Fine (PMRV/PRV) / Adaptation Pour Reducteurs A Vis Sans Fin (PMRV/PRV) / Acoplamiento Para Reductores De Tornillo Sin Fin (PMRV/PRV)

PL	PMRV/PRV 050					PMRV/PRV 063					PMRV/PRV 075				
	LM	l	h	MA	G	LM	l	h	MA	G	LM	l	h	MA	G
5001	349	50	110	60	80	358.5	63	135	72	95	337.5	75	161	86	112.5
5002	410					419.5					398.5				
5003	458					467.5					446.5				
5004	506					515.5					494.5				

PL	PMRV/PRV 090					PMRV/PRV 110					PMRV/PRV 130				
	LM	l	h	MA	G	LM	l	h	MA	G	LM	l	h	MA	G
5001	347.5	90	193	103	129.5	361.5	110	237.5	127.5	160	369	130	277.5	147.5	180
5002	408.5					-					-				
5003	456.5					-					-				
5004	504.5					-					-				

PL	PMRV/PRV ~ Kg					
	050	063	075	090	110	130
5001	55	58.5	61	66	93	110
5002	63	66.5	69	74	-	-
5003	69	72.5	75	79	-	-
5004	75	78.5	81	85	-	-

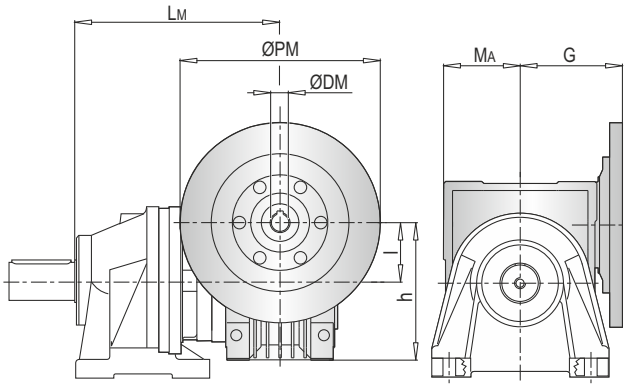

ØPM
ØDM
105

PLB 5000 CPC - Elektrik Motor Adaptörleri (IEC) / Electric Motor Couplings (IEC) / Anbauvorrichtung Für Elektromotore (IEC) / Predisposizioni Per Motori Elettrici (IEC) / Adaptations Pour Moteurs Electriques (IEC) / Acoplamientos Para Motores Eléctricos (IEC)

PLB	IEC 80				IEC 90				IEC 100				IEC 112			
	A	LT	Z	ØD	A	LT	Z	ØD	A	LT	Z	ØD	A	LT	Z	ØD
5002	325	296	56	200	325	296	56	200	325	306	66	250	325	306	66	250
5003	359.5	216			359.5	216			359.5	226			359.5	226		
5004	407.5				407.5				407.5				407.5			

PLB	IEC 132				IEC 160			
	A	LT	Z	ØD	A	LT	Z	ØD
5002	325	340	100	300	325	379	139	350
5003	359.5	260			-			
5004	407.5				-			

PLB	IEC ~ Kg					
	80	90	100	112	132	160
5002	72	72	73	73	77	87
5003	80	80	81	81	85	-
5004	86	86	87	87	91	-

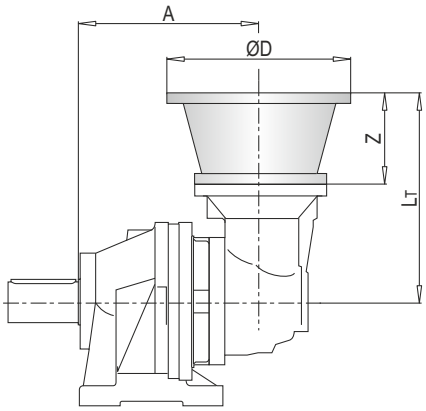

103

PLB 5000 CPC - Giriş Milleri / Input Shafts / Antriebswellen / Alberi Entrata / Arbres D'entree / Ejes De Entrada

PLB	EL C 28					EL C 42					EML 42					EML 1"3/8 Z6					EM 65				
	A	LT	Z	L	Ød	A	LT	Z	L	Ød	A	LT	Z	L	Ød	A	LT	Z	L	Ød	A	LT	Z	L	Ød
5002	325	304	64	50	28	325	304	64	82	42	325	334	94	82	42	325	334	94	106	1"3/8	325	377.5	121.5	105	65
5003	359.5	224				359.5	224				359.5	254				359.5	254				359.5	297.5			
5004	407.5					407.5					407.5					407.5					407.5				

PLB	EM 1"3/8 Z6					EP 65				
	A	LT	Z	L	Ød	A	LT	Z	L	Ød
5002	325	377.5	121.5	105	1"3/8	325	409	153	105	65
5003	359.5	297.5				359.5	329			
5004	407.5					407.5				

PLB	~ Kg						
	EL C 28	EL C 42	EML 42	EML 1"3/8 Z6	EM 65	EM 1"3/8 Z6	EP 65
5002	70.5	71.0	74.0	74.0	82.0	82.0	91.0
5003	78.5	79.0	82.0	82.0	90.0	90.0	99.0
5004	84.5	85.0	88.0	88.0	96.0	96.0	105.0

Ød 88-90

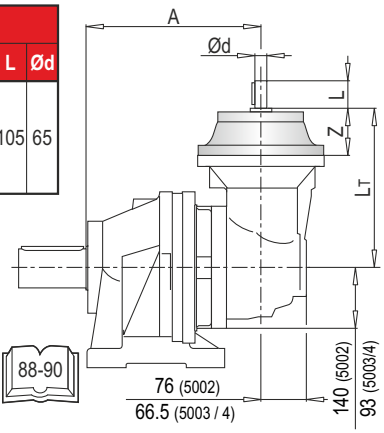

PL	~ Kg MS
5001	34
5002	42
5003	48
5004	54

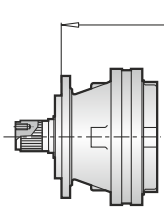

PL	~ Kg MC
5001	34
5002	42
5003	48
5004	54

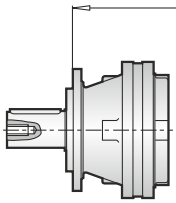

PL	~ Kg PS
5001	43
5002	51
5003	57
5004	63

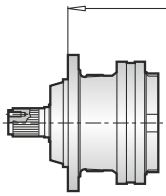

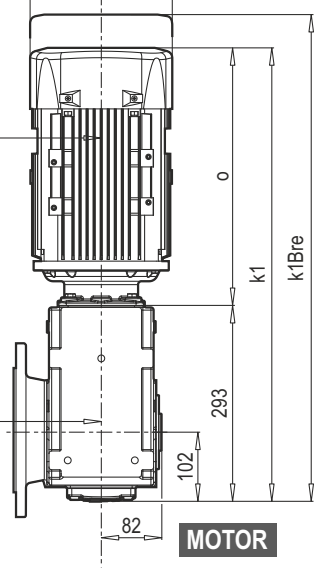

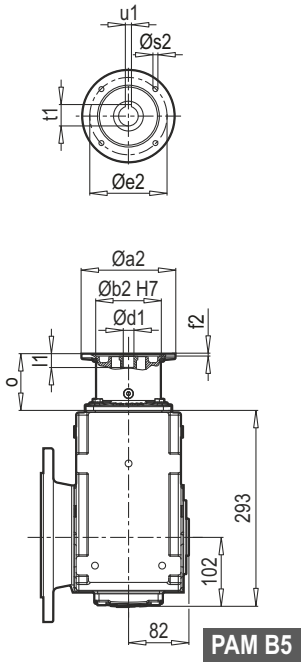

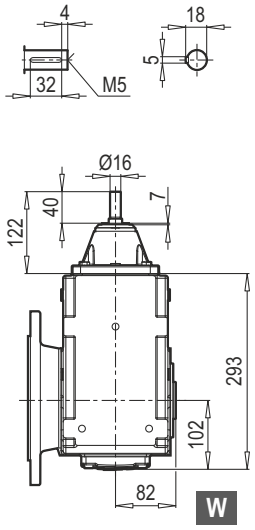

W ~ Kg	
PKD 2390	44

PL	~ Kg PC
5001	43
5002	51
5003	57
5004	63

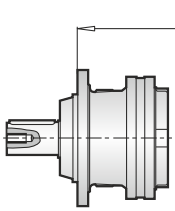

PL	~ Kg F
5001	26
5002	33
5003	39
5004	45

PL	~ Kg FS
5001	36
5002	44
5003	50
5004	56

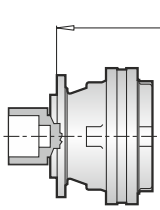

PL	~ Kg CPC
5001	47
5002	55
5003	61
5004	67

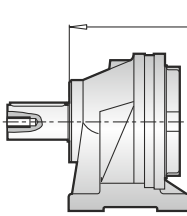

PL	L						
	MS	MC	PS	PC	F	FS	CPC
5001	339	339	346	346	253	339	386
5002	400	400	407	407	314	400	447
5003	448	448	455	455	362	448	495
5004	496	496	503	503	410	496	543

	MOTOR	g	g1	k1	k1Bre	o
PKD 2390	63 M	124	111	491	543	198
	71 M	140	119	533	593	240
	80 M	159	127	560	622	267
	90 S	193	151	583	656	290
	90 L	193	151	603	676	310
	100 L	217	160	631	712	338
	112 M	232	168	676	756	383

~ Kg	
MOTOR	PKD 2390
63 M	44
71 M	49
80 M	51
90 S	53
90 L	55
100 L	67
112 M	74

	PAM B5	Øa2	Øb2	Øe2	f2	Øs2	Ød1	l1	t1	u1	o
PKD 2390	63	140	95	115	3.5	M8	11	23	12.8	4	85
	71	160	110	130	4.0	M8	14	30	16.3	5	55
	80	200	130	165	4.0	M10	19	40	21.8	6	74
	90	200	130	165	4.0	M10	24	50	27.3	8	74
	100	250	180	215	5.0	M12	28	60	31.3	8	131.5
	112	250	180	215	5.0	M12	28	60	31.3	8	131.5

~ Kg	
PAM B5	PKD 2390
63	42
71	42
80	43
90	43
100	50
112	50

PL	~ Kg MS
5001	34
5002	42
5003	48
5004	54

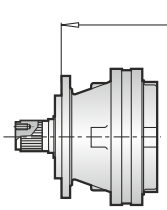

PL	~ Kg MC
5001	34
5002	42
5003	48
5004	54

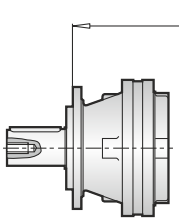

PL	~ Kg PS
5001	43
5002	51
5003	57
5004	63

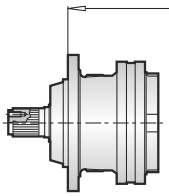

PL	~ Kg PC
5001	43
5002	51
5003	57
5004	63

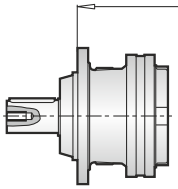

PL	~ Kg F
5001	26
5002	33
5003	39
5004	45

PL	~ Kg FS
5001	36
5002	44
5003	50
5004	56

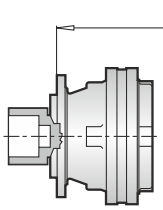

PL	~ Kg CPC
5001	47
5002	55
5003	61
5004	67

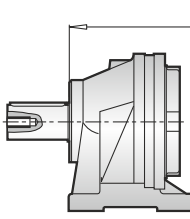

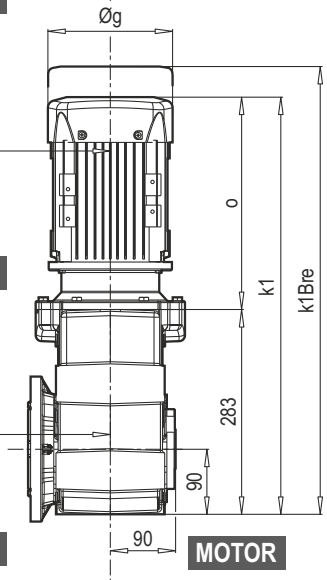

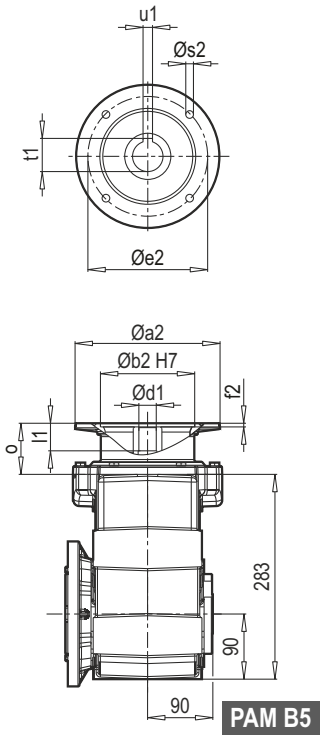

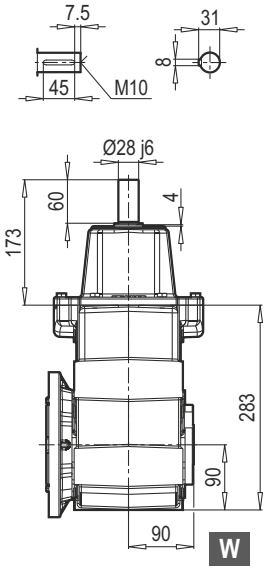

PL	L						
	MS	MC	PS	PC	F	FS	CPC
5001	339	339	346	346	253	339	386
5002	400	400	407	407	314	401	447
5003	448	448	455	455	362	448	495
5004	496	496	503	503	410	496	543

W ~ Kg	
K 40390	35

	MOTOR	g	g1	k1	k1Bre	o
K 40390	80 M	159	127	530	592	247
	90 S	193	151	576	649	293
	90 L	193	151	596	669	313
	100 L	217	160	619	700	336
	112 M	232	168	672	752	389
	132 S	279	182	679	787	396
	132 M	279	182	714	855	431
	160 M	323	200	801	953	518

~ Kg	
MOTOR	K 40390
80 M	38
90 S	41
90 L	43
100 L	54
112 M	61
132 S	77
132 M	88
160 M	87

	PAM B5	Øa2	Øb2	Øe2	f2	Øs2	Ød1	l1	t1	u1	o
K 40390	80	200	130	165	5	M10	19	42	21.8	6	70
	90	200	130	165	5	M10	24	52	27.3	8	70
	100	250	180	215	5.5	M12	28	62	31.3	8	85
	112	250	180	215	5.5	M12	28	62	31.3	8	85
	132	300	230	265	5.5	M12	38	82	41.3	10	110

~ Kg	
PAM B5	K 40390
80	33
90	33
100	35
112	35
132	39

AKSESUARLAR / ACCESSORIES / ZUBEHÖR / ACCESSORI / ACCESSOIRES / ACCESORIOS

YZ
Pinyon / Pinion / Ritzel
Pignoni / Pignon / Piñones

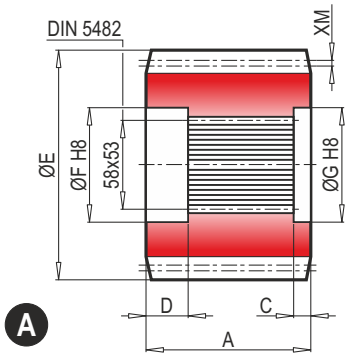

	Çıkış tipi Output type Abtriebs-version Versione Version Versión	M	Z	XM	A	B	C	D	E	F	G	K	Malzeme Material Material Materiale Matière Material	Kod Code Bestell-Nr. Codice Code Código
A	M	8	13	0	68	-	8.5	22.5	120	60	60	-	18NiCrMo5	1071.218.042
A	M	8	11	5	68	-	8.5	22.5	110.8	60	60	-	38NiCrMo4	1071.258.042
A	M	8	12	0	68	-	8	21	112.8	60	60	-	38NiCrMo4	1071.196.042
B	P	10	14	3.2	103	116	9.5	22.5	162.4	60	60	105	18NiCrMo5	1071.298.042
A	M	8	15	0	68	-	8.5	22.5	136	60	60	-	38NiCrMo4	1071.163.042
A	P	6	14	3	95	-	23	21	99.6	60	60	-	38NiCrMo4	1071.160.042
A	P	10	11	8	90	-	8.5	22.5	142.1	60	60	-	18NiCrMo5	1071.297.042

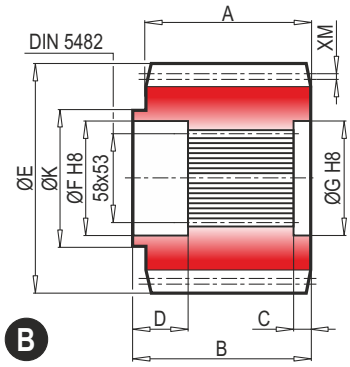

FF
Sabitleme rondelası / Stop bottom plate / Endscheibe /
Fondello di arresto / Bouchon de fermeture / Tapón de detención

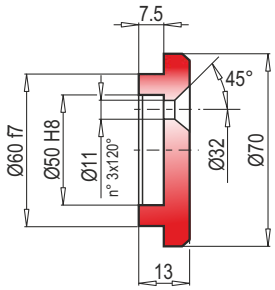

Kod / Code
Bestell - Nr. / Codice
Code / Código
1075.015.000

BS
Spline kaplin / Splined bushing / Innenverzahnte Buchse /
Boccola scanalata / Moyeu cannelé / Casquillo ranurado

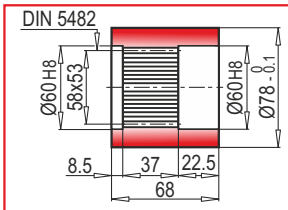

Material / Material
Malzeme / Materiale
Matière / Material

UNI C40
SAE 1040
DIN Ck40

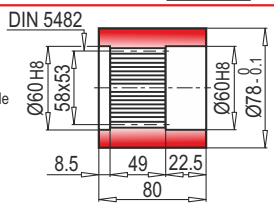

MS Bestell - Nr. / Code
Kod / Codice
Code / Código
2171.101.076

PS Bestell - Nr. / Code
Kod / Codice
Code / Código
4171.101.076

KB
Spline mil / Splined rod / Außenverzahnte Welle /
Barra scanalata / Arbre cannelé / Barra ranurada

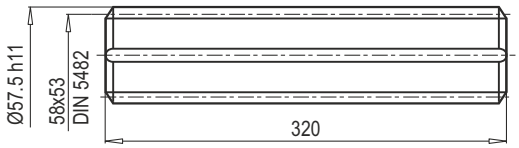

UNI 39NiCrMo3

Material / Material
Malzeme / Materiale
Matière / Material

Vergütet / Hardened and tempered
Sertleşmiş ve tavlanmış / Bonifié
Bonificado / Endurecido e temperado

Bestell - Nr. / Code
Kod / Codice
Code / Código
3071.181.042

FL
Flanş / Flange / Flansch
Flangia / Bride / Brida

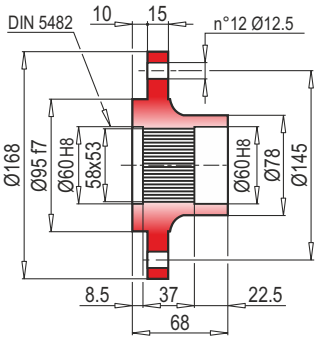

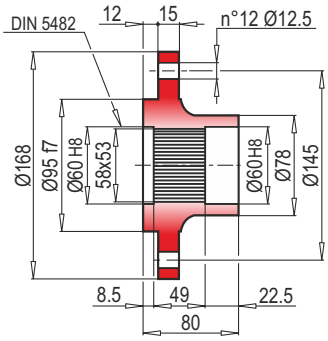

MS Bestell - Nr. / Code
Kod / Codice
Code / Código
2171.103.025

PS Bestell - Nr. / Code
Kod / Codice
Code / Código
4171.103.098

GA
Konik sıktırma / Shrink disc / Schrumpfscheibe /
Giunto di attrito / Frette de serrage / Disco de contracción

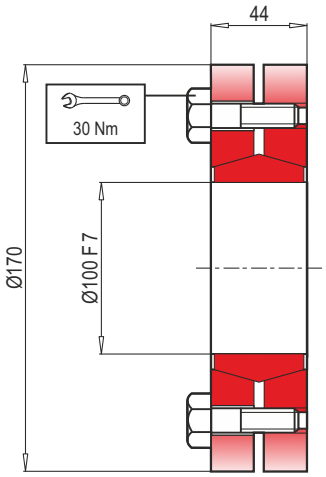

Max. Drehmoment
Max. torque
Maksimum moment
Coppia max.
Couple max.
Momento máx.
7.5 kNm

Bestell - Nr. / Code
Kod / Codice
Code / Código
5109.100.000

TR RADYAL YÜKLER (Fr)

Aşağıdaki grafikler istenilen $n_2$xh değerinin elde edilmesi için gerekli olan radyal yükleri ve K faktörlerini göstermektedir.

EN RADIAL LOADS (Fr)

The following curves show the radial loads and the K factors to obtain the required n2xh value.

DE RADIALLAST (Fr)

In den nachstehenden Diagrammen ist die Radiallast un der Koeffizient K dargestellt und kann mit dem gewünschten Wert $n_2$xh verglichen werden.

IT CARICHI RADIALI (Fr)

Nei diagrammi seguenti sono riportati i carichi radiali e i coefficienti K per rapportarli al valore $n_2$xh desiderato.

FR CHARGES RADIALES (Fr)

Dans les diagrammes suivants sont indiqués les charges radiales et les facteurs K de façon à obtenir la valeur $n_2$xh désirée.

ES CARGAS RADIALES (Fr)

En los siguientes diagramas se indican las cargas radiales y los coefici - entes K para obtener el valor requerido $n_2$xh.

M - P - CPC*

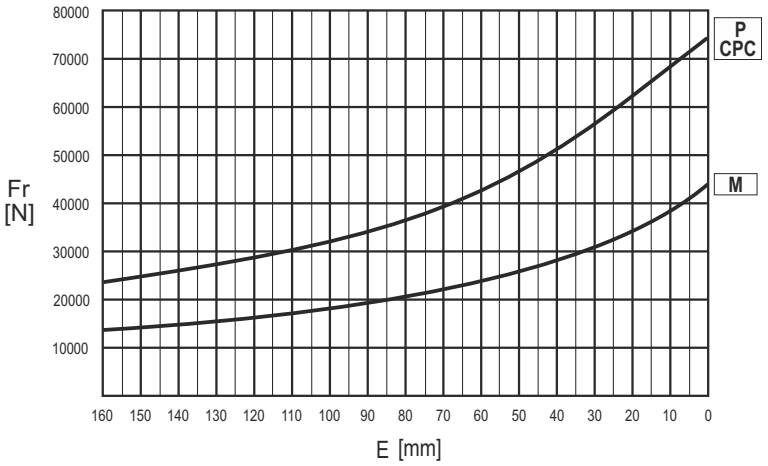

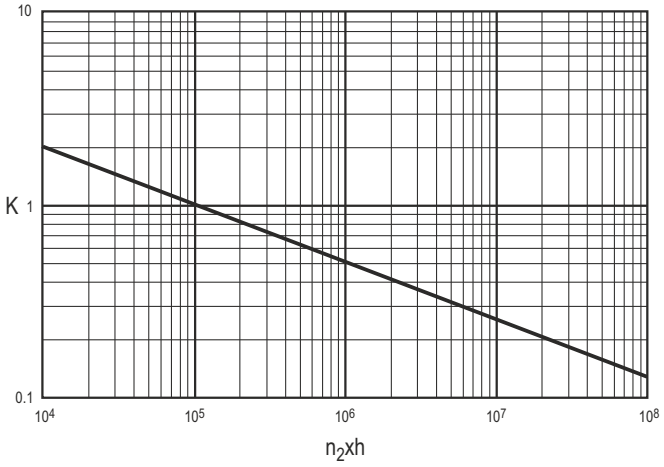

	n x h				
	10^5	10^4	10^6	10^7	10^8
M - P	Fr	Fr • K			
CPC*	Fr • 0.75	Fr • K • 0.75			

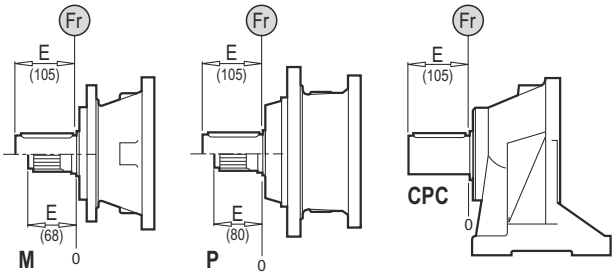

TR EKSENEL YÜKLER (Fa)

Tabloda yer alan eksenel yük değerleri, çıkış tipine ve uygulamanın yük yönüne göre değişir.

EN AXIAL LOADS (Fa)

The values of the axial loads in the table refer to the output versions and load direction of application.

DE AXIALLAST (Fa)

Die dargestellten Werte der Axiallast basieren auf der Version und der applizierten Lastrichtung.

IT CARICHI ASSIALI (Fa)

I valori dei carichi assiali indicati in tabella sono riferiti alle versioni e alla direzione di applicazione del carico.

FR CHARGES AXIALES (Fa)

Les valeurs des charges axiales indiquées dans le tableau se réfèrent aux versions et à la direction d'application de lacharge.

ES CARGAS AXIALES (Fa)

Los valores de las cargas axiales indicados en la tabla se refieren a las versiones y a la dirección de aplicación de la carga.

Fa [N]	M	P - CPC	
	32000	32000	←
	32000	48000	→

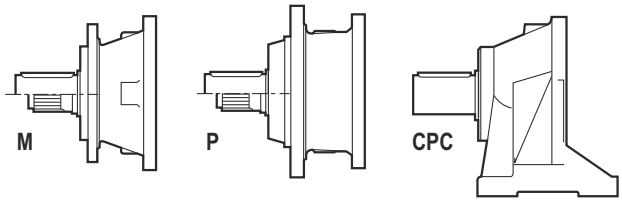

TEKNİK VERİLER / TECHNICAL DATA / TECHNISCHE DATEN / DATI TECNICI / DONNÉES TECHNIQUES / DATOS TÉCNICAS

	i_{ges}	M_2max (n1: 1400rpm) (Nm)
7001	3.67 ... 7.00	2940
7002	13.9 ... 50.8	3760
7003	53.8 ... 342.6	5480
7004	301.1 ... 2968.9	6980

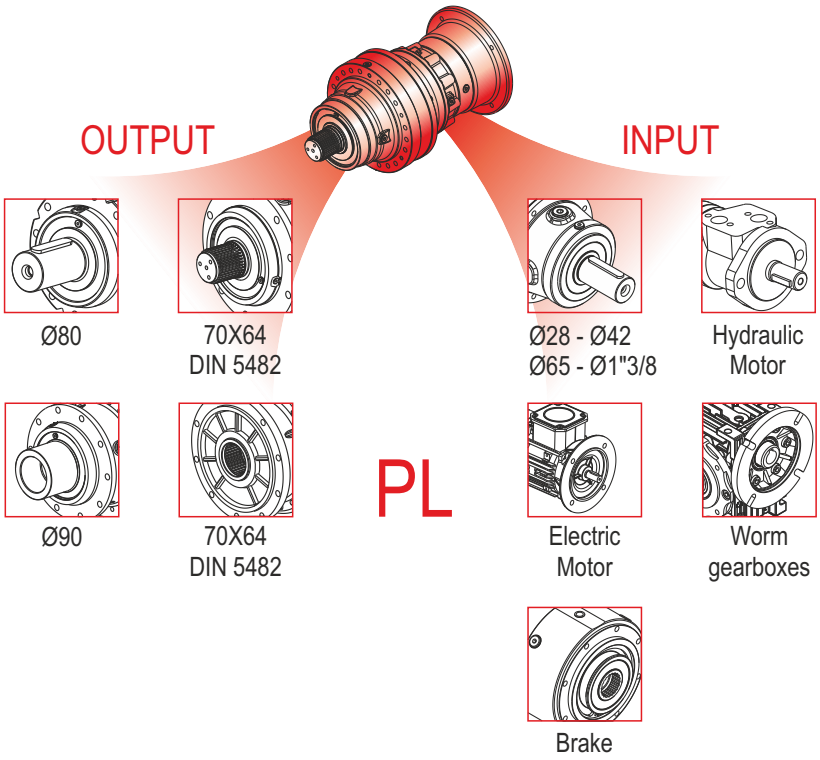

	i_{ges}	M_2max (n1: 1400rpm) (Nm)
7002	12.7 ... 38.1	3700
7003	53.6 ... 148.9	4740
7004	157.7 ... 1069.0	6180

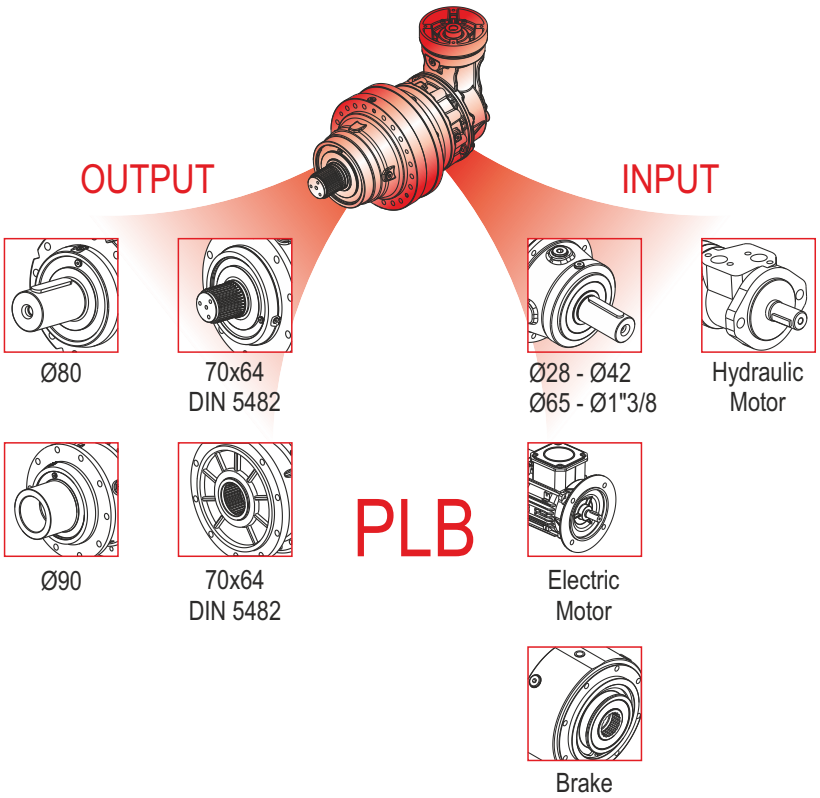

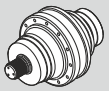	Pt [kW]	n_{1max} [min^{-1}]	i_{ges}	Mc [kNm]				Giriş- Input - Antrieb - Entrata - Entrée - Entrada		
				n_2 x h	n_2 x h	n_2 x h	n_2 x h			
				10.000	20.000	50.000	100.000	IEC (B5)	PMRV / PRV	EL - EML EM - EP - ET
PL 7001	30	2800	3.67 4.43 5.00 5.80 7.00	8.09 7.38 6.49 5.49 4.44	7.16 6.54 5.74 4.86 3.93	6.09 5.56 4.89 4.13 3.35	5.40 4.93 4.32 3.66 2.96	160 180 200	110 130	EM 65 EM 1"3/8 Z6 EP 65
PL 7002	18	2800	13.9 18.3 20.6 22.9 26.6 30.0 36.3 42.1 50.8	8.09 7.38 6.49 7.38 7.38 6.49 6.49 5.49 4.44	7.16 6.54 5.74 6.54 6.54 5.74 5.74 4.86 3.93	6.09 5.56 4.89 5.56 5.56 4.89 4.89 4.13 3.35	5.40 4.93 4.32 4.93 4.93 4.32 4.32 3.66 2.96	63 71 80 90 100 112 132 160 180	050 063 075 090 110 130	EL C 28 EL C 42 EML 42 EML 1"3/8 Z6 EM 65 EM 1"3/8 Z6 EP 65
PL 7003	14	2800	53.8 64.8 71.7 78.3 88.4 93.7 102.1 112.9 127.9 139.2 148.8 155.4 174.4 194.9 216.7 244.7 283.8 342.6	8.09 8.09 7.38 7.38 6.49 7.38 8.09 7.38 8.09 6.49 7.38 6.49 6.49 5.49 7.38 6.49 5.49 4.44	7.16 7.16 6.54 6.54 5.74 6.54 7.16 6.54 7.16 5.74 6.54 5.74 5.74 4.86 6.54 5.74 4.86 3.93	6.09 6.09 5.56 5.56 4.89 5.56 6.09 5.56 6.09 4.89 5.56 4.89 4.89 4.13 5.56 4.89 4.13 3.35	5.40 5.40 4.93 4.93 4.32 4.93 5.40 4.93 5.40 4.32 4.93 4.32 4.32 3.66 4.93 4.32 3.66 2.96	63 71 80 90 100 112 132 160	050 063 075 090	EL C 28 EL C 42 EML 42 EML 1"3/8 Z6
PL 7004	8	2800	301.1 332.4 347.9 400.7 434.4 474.3 523.6 571.7 632.4 661.9 747.3 768.7 832.3 870.0 976.5 1048.7 1177.0 1366.9 1651.6 2968.9	8.09 8.09 8.09 8.09 8.09 8.09 8.09 8.09 7.38 7.38 6.49 7.38 7.38 6.49 6.49 6.49 6.49 6.49 6.49 4.44	7.16 7.16 7.16 7.16 7.16 7.16 7.16 7.16 6.54 6.54 5.74 6.54 6.54 5.74 5.74 5.74 5.74 5.74 5.74 3.93	6.09 6.09 6.09 6.09 6.09 6.09 6.09 6.09 5.56 5.56 4.89 5.56 5.56 4.89 4.89 4.89 4.89 4.89 4.89 3.35	5.40 5.40 5.40 5.40 5.40 5.40 5.40 5.40 4.93 4.93 4.32 4.93 4.93 4.32 4.32 4.32 4.32 4.32 4.32 2.96	63 71 80 90 100 112 132	050 063 075 090	EL C 28 EL C 42 EML 42 EML 1"3/8 Z6

	Pt [kW]	n_{1max} [min^{-1}]	i_{ges}	Mc [kNm]				Giriş- Input - Antrieb - Entrata - Entrée - Entrada	
				n_2 x h	n_2 x h	n_2 x h	n_2 x h		
				10.000	20.000	50.000	100.000	IEC (B5)	EL - EML EM - EP - ET
PLB 7002	18	2800	12.7 15.3 17.3 20.0 24.1 27.2 31.6 38.1	8.09 7.38 6.49 5.49 7.38 6.49 5.49 4.44	7.16 6.54 5.74 4.86 6.54 5.74 4.86 3.93	6.09 5.56 4.89 4.13 5.56 4.89 4.13 3.35	5.40 4.93 4.32 3.66 4.93 4.32 3.66 2.96	80 90 100 112 132 160 180	EL C 28 EL C 42 EML 42 EML 1"3/8 Z6 EM 65 EM 1"3/8 Z6 EP 65
PLB 7003	14	2800	53.6 55.6 60.5 67.1 77.9 88.0 94.2 106.3 123.3 148.9	7.38 7.38 6.49 7.38 7.38 6.49 7.38 6.49 5.49 4.44	6.54 6.54 5.74 6.54 6.54 5.74 6.54 5.74 4.86 3.93	5.56 5.56 4.89 5.56 5.56 4.89 5.56 4.89 4.13 3.35	4.93 4.93 4.32 4.93 4.93 4.32 4.93 4.32 3.66 2.96	80 90 100 112 132 160	EL C 28 EL C 42 EML 42 EML 1"3/8 Z6 EM 65 EM 1"3/8 Z6 EP 65
PLB 7004	8	2800	157.7 174.1 190.1 210.3 229.6 248.4 274.8 300.1 331.2 361.7 393.0 453.0 511.5 557.0 594.0 656.7 717.7 832.6 921.5 1069.0	8.09 8.09 8.09 7.38 7.38 8.09 7.38 7.38 7.38 7.38 5.49 7.38 6.49 5.49 6.49 6.49 6.49 5.49 6.49 5.49	7.16 7.16 7.16 6.54 6.54 7.16 6.54 6.54 6.54 6.54 4.86 6.54 5.74 4.86 5.74 5.74 5.74 4.86 5.74 4.86	6.09 6.09 6.09 5.56 5.56 6.09 5.56 5.56 5.56 5.56 4.13 5.56 4.89 4.13 4.89 4.89 4.89 4.13 4.89 4.13	5.40 5.40 5.40 4.93 4.93 5.40 4.93 4.93 4.93 4.93 3.66 4.93 4.32 3.66 4.32 4.32 4.32 3.66 4.32 3.66	80 90 100 112 132	EL C 28 EL C 42 EML 42 EML 1"3/8 Z6 EM 65 EM 1"3/8 Z6 EP 65

(n_2 x h = 20.000)

$$M_{max} = M_c \times 2$$

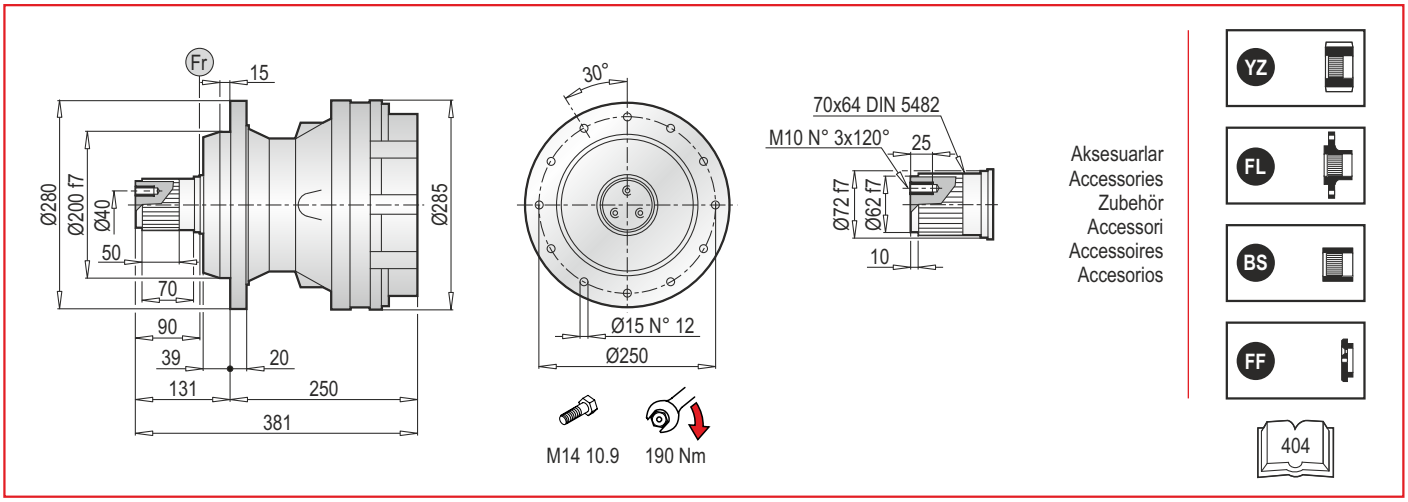

PL 7000 PS - Elektrik Motor Adaptörleri (IEC) / Electric Motor Couplings (IEC) / Anbauvorrichtung Für Elektromotore (IEC) / Predisposizioni Per Motori Elettrici (IEC) / Adaptations Pour Moteurs Electriques (IEC) / Acoplamientos Para Motores Eléctricos (IEC)

PL	IEC 63			IEC 71			IEC 80			IEC 90			IEC 100		
	LT	Z	ØD	LT	Z	ØD	LT	Z	ØD	LT	Z	ØD	LT	Z	ØD
7001	-			-			-			-			-		
7002	345.5	36	140	345.5	36	160	365.5	56	200	365.5	56	200	375.5	66	250
7003	393.5			393.5			413.5			413.5			423.5		
7004	441.5			441.5			461.5			461.5			471.5		

PL	IEC 112			IEC 132			IEC 160			IEC 180			IEC 200		
	LT	Z	ØD	LT	Z	ØD	LT	Z	ØD	LT	Z	ØD	LT	Z	ØD
7001	-			-			368	118	350	368	118	350	398	148	400
7002	375.5	66	250	409.5	100	300	448.5	139	350	448.5	139	350	-		
7003	423.5			457.5			496.5			-			-		
7004	471.5			505.5			-			-			-		

PL	IEC ~ Kg									
	63	71	80	90	100	112	132	160	180	200
7001	-	-	-	-	-	-	-	90	90	100
7002	85	85	87	87	88	88	92	102	102	-
7003	91	91	93	93	94	94	98	108	-	-
7004	97	97	99	99	100	100	104	-	-	-

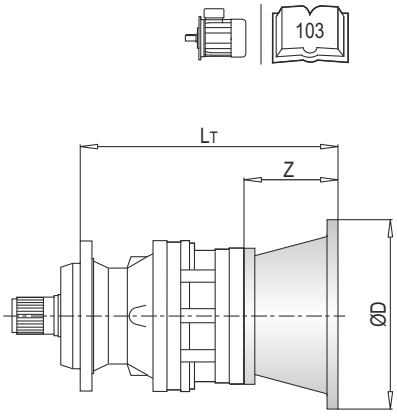

PL 7000 PS - Giriş Milleri / Input Shafts / Antriebswellen / Alberi Entrata / Arbres D'entree / Ejes De Entrada

PL	EL C 28				EL C 42				EML 42				EML 1"3/8 Z6				EM 65				EM 1"3/8 Z6			
	LT	Z	L	Ød	LT	Z	L	Ød	LT	Z	L	Ød	LT	Z	L	Ød	LT	Z	L	Ød	LT	Z	L	Ød
7001	-				-				-				-				371.5	121.5	105	65	371.5	121.5	105	1"3/8
7002	373.5	64	50	28	373.5	64	82	42	403.5	94	82	42	403.5	94	106	1"3/8	444.5				444.5			
7003	421.5				421.5				451.5				451.5				-				-			
7004	469.5				469.5				499.5				499.5				-				-			

PL	EP 65			
	LT	Z	L	Ød
7001	403	153	105	65
7002	476			
7003	-			
7004	-			

PL	~ Kg						
	EL C 28	EL C 42	EML 42	EML 1"3/8 Z6	EM 65	EM 1"3/8 Z6	EP 65
7001	-	-	-	-	85.0	85.0	94.0
7002	85.5	86.0	89.0	89.0	97.0	97.0	106.0
7003	91.5	92.0	95.0	95.0	-	-	-
7004	97.5	98.0	101.0	101.0	-	-	-

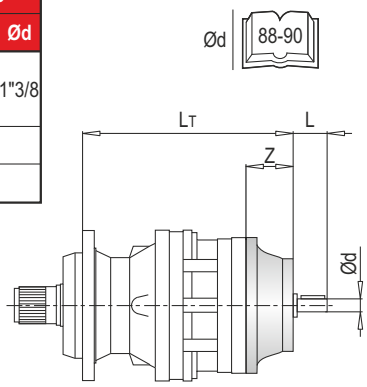

PL 7000 PS - Sonsuz Dişlili Redüktör Adaptörleri (PMRV/PRV) / Worm Gearbox Adaptors (PMRV/PRV) / Anschluss Für Schneckengetriebe (PMRV/PRV) / Predisposizioni Per Riduttori A Vite Senza Fine (PMRV/PRV) / Adaptation Pour Reducteurs A Vis Sans Fin (PMRV/PRV) / Acoplamiento Para Reductores De Tornillo Sin Fin (PMRV/PRV)

PL	PMRV/PRV 050					PMRV/PRV 063					PMRV/PRV 075				
	LM	l	h	MA	G	LM	l	h	MA	G	LM	l	h	MA	G
7001	-					-					-				
7002	435	50	110	60	80	444.5	63	135	72	95	423.5	75	161	86	112.5
7003	483					492.5					471.5				
7004	531					540.5					519.5				

PL	PMRV/PRV 090					PMRV/PRV 110					PMRV/PRV 130				
	LM	l	h	MA	G	LM	l	h	MA	G	LM	l	h	MA	G
7001	-					388	110	237.5	127.5	160	395.5	130	277.5	147.5	180
7002	433.5	90	193	103	129.5	461					468.5				
7003	481.5					-					-				
7004	529.5					-					-				

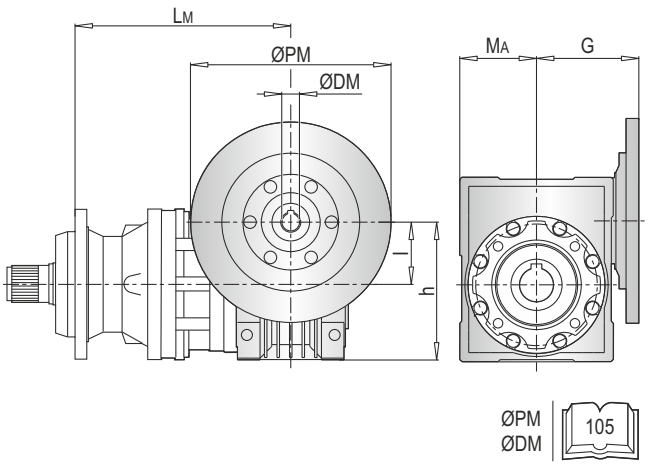

PL	PMRV/PRV~ Kg					
	050	063	075	090	110	130
7001	-	-	-	-	114	131
7002	88	91.5	94	99	126	143
7003	94	97.5	100	105	-	-
7004	100	103.5	106	111	-	-

PLB 7000 PS - Elektrik Motor Adaptörleri (IEC) / Electric Motor Couplings (IEC) / Anbauvorrichtung Für Elektromotore (IEC) / Predisposizioni Per Motori Elettrici (IEC) / Adaptations Pour Moteurs Electriques (IEC) / Acoplamientos Para Motores Eléctricos (IEC)

PLB	IEC 80				IEC 90				IEC 100				IEC 112				IEC 132			
	A	LT	Z	ØD	A	LT	Z	ØD	A	LT	Z	ØD	A	LT	Z	ØD	A	LT	Z	ØD
7002	338	296	56	200	338	296	56	200	338	306	66	250	338	306	66	250	338	340	100	300
7003	384.5	216			384.5	216			384.5	226			384.5	226			384.5	260		
7004	432.5				432.5				432.5				432.5				432.5			

PLB	IEC 160				IEC 180			
	A	LT	Z	ØD	A	LT	Z	ØD
7002	338	379	139	350	338	379	139	350
7003	384.5	299			-			
7004	-				-			

PLB	IEC ~ Kg						
	80	90	100	112	132	160	180
7002	113	113	114	114	118	128	128
7003	102	102	103	103	107	117	-
7004	109	109	110	110	114	-	-

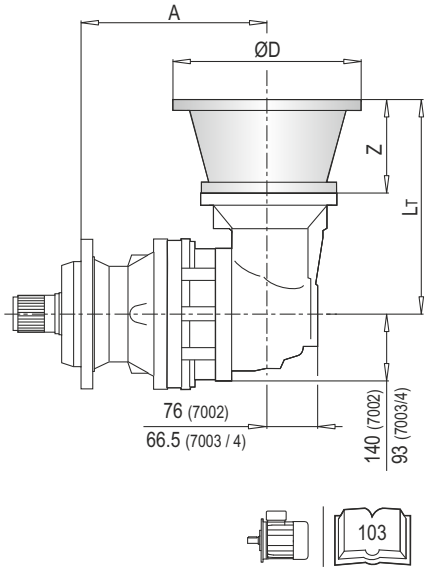

PLB 7000 PS - Giriş Milleri / Input Shafts / Antriebswellen / Alberi Entrata / Arbres D'entree / Ejes De Entrada

PLB	EL C 28					EL C 42					EML 42					EML 1"3/8 Z6					EM 65				
	A	LT	Z	L	Ød	A	LT	Z	L	Ød	A	LT	Z	L	Ød	A	LT	Z	L	Ød	A	LT	Z	L	Ød
7002	338	304	64	50	28	338	304	64	82	42	338	334	94	82	42	338	334	94	106	1"3/8	338	377.5	121.5	105	65
7003	384.5	224				384.5	224				384.5	254				384.5	254				384.5	297.5			
7004	432.5					432.5					432.5					432.5					432.5				

PLB	EM 1"3/8 Z6					EP 65				
	A	LT	Z	L	Ød	A	LT	Z	L	Ød
7002	338	377.5	121.5	105	1"3/8	338	393	153	105	65
7003	384.5	297.5				384.5	329			
7004	432.5					432.5				

PLB	~ Kg						
	EL C 28	EL C 42	EML 42	EML 1"3/8 Z6	EM 65	EM 1"3/8 Z6	EP 65
7002	111.5	112.0	115.0	115.0	123.0	123.0	132.0
7003	100.5	101.0	104.0	104.0	112.0	112.0	121.0
7004	107.5	108.0	111.0	111.0	119.0	119.0	128.0

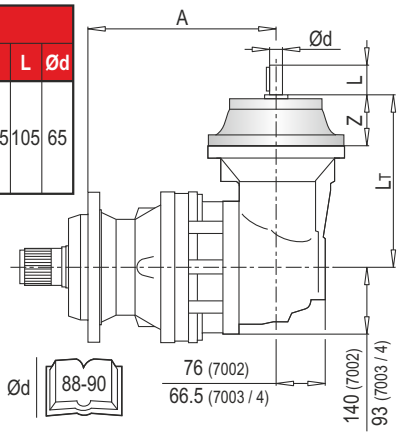

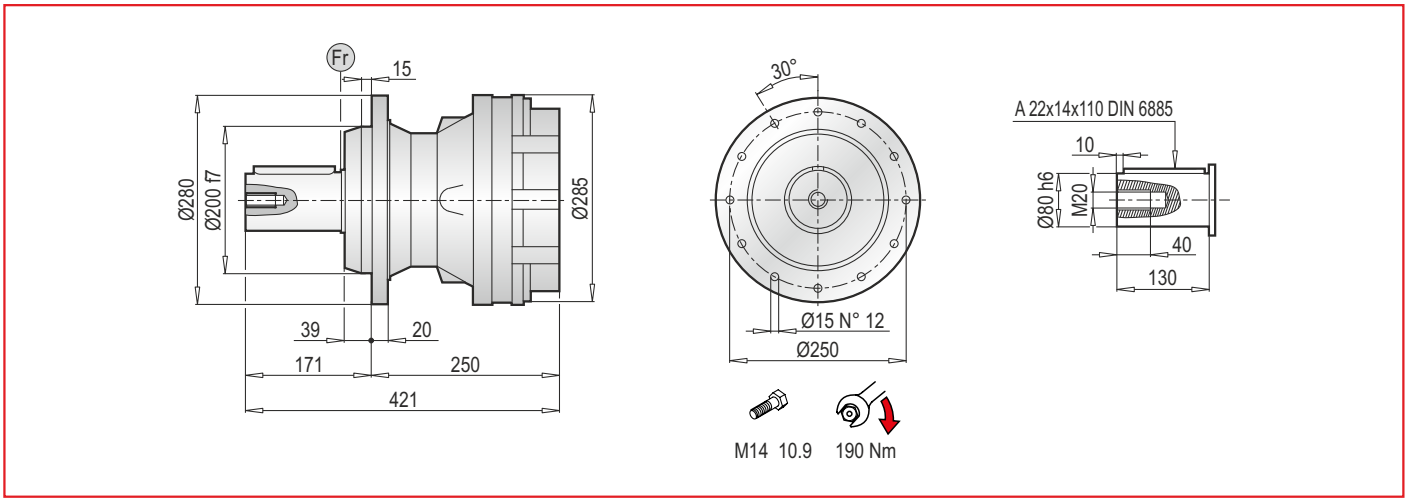

PL 7000 PC - Elektrik Motor Adaptörleri (IEC) / Electric Motor Couplings (IEC) / Anbauvorrichtung Für Elektromotore (IEC) / Predisposizioni Per Motori Elettrici (IEC) / Adaptations Pour Moteurs Electriques (IEC) / Acoplamientos Para Motores Eléctricos (IEC)

PL	IEC 63			IEC 71			IEC 80			IEC 90			IEC 100		
	LT	Z	ØD	LT	Z	ØD	LT	Z	ØD	LT	Z	ØD	LT	Z	ØD
7001	-			-			-			-			-		
7002	345.5	36	140	345.5	36	160	365.5	56	200	365.5	56	200	375.5	66	250
7003	393.5			393.5			413.5			413.5			423.5		
7004	441.5			441.5			461.5			461.5			471.5		

PL	IEC 112			IEC 132			IEC 160			IEC 180			IEC 200		
	LT	Z	ØD	LT	Z	ØD	LT	Z	ØD	LT	Z	ØD	LT	Z	ØD
7001	-			-			368	118	350	368	118	350	398	148	400
7002	375.5	66	250	409.5	100	300	448.5	139	350	448.5	139	350	-		
7003	423.5			457.5			496.5			-			-		
7004	471.5			505.5			-			-			-		

PL	IEC ~ Kg									
	63	71	80	90	100	112	132	160	180	200
7001	-	-	-	-	-	-	-	90	90	100
7002	85	85	87	87	88	88	92	102	102	-
7003	91	91	93	93	94	94	98	108	-	-
7004	97	97	99	99	100	100	104	-	-	-

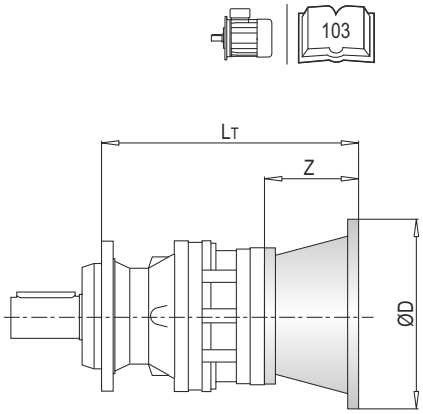

PL 7000 PC - Giriş Milleri / Input Shafts / Antriebswellen / Alberi Entrata / Arbres D'entree / Ejes De Entrada

PL	EL C 28				EL C 42				EML 42				EML 1"3/8 Z6				EM 65				EM 1"3/8 Z6			
	LT	Z	L	Ød	LT	Z	L	Ød	LT	Z	L	Ød	LT	Z	L	Ød	LT	Z	L	Ød	LT	Z	L	Ød
7001	-				-				-				-				371.5	121.5	105	65	371.5	121.5	105	1"3/8
7002	373.5	64	50	28	373.5	64	82	42	403.5	94	82	42	403.5	94	106	1"3/8	444.5				444.5			
7003	421.5				421.5				451.5				451.5				-				-			
7004	469.5				469.5				499.5				499.5				-				-			

PL	EP 65			
	LT	Z	L	Ød
7001	403	153	105	65
7002	476			
7003	-			
7004	-			

PL	~ Kg						
	EL C 28	EL C 42	EML 42	EML 1"3/8 Z6	EM 65	EM 1"3/8 Z6	EP 65
7001	-	-	-	-	85.0	85.0	94.0
7002	85.5	86.0	89.0	89.0	97.0	97.0	106.0
7003	91.5	92.0	95.0	95.0	-	-	-
7004	97.5	98.0	101.0	101.0	-	-	-

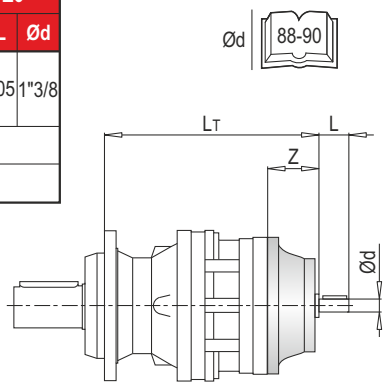

PL 7000 PC - Sonsuz Dişlili Redüktör Adaptörleri (PMRV/PRV) / Worm Gearbox Adaptors (PMRV/PRV) / Anschluss Für Schneckengetriebe (PMRV/PRV) / Predisposizioni Per Riduttori A Vite Senza Fine (PMRV/PRV) / Adaptation Pour Reducteurs A Vis Sans Fin (PMRV/PRV) / Acoplamiento Para Reductores De Tornillo Sin Fin (PMRV/PRV)

PL	PMRV/PRV 050					PMRV/PRV 063					PMRV/PRV 075				
	LM	l	h	MA	G	LM	l	h	MA	G	LM	l	h	MA	G
7001	-					-					-				
7002	435	50	110	60	80	444.5	63	135	72	95	423.5	75	161	86	112.5
7003	483					492.5					471.5				
7004	531					540.5					519.5				

PL	PMRV/PRV 090					PMRV/PRV 110					PMRV/PRV 130				
	LM	l	h	MA	G	LM	l	h	MA	G	LM	l	h	MA	G
7001	-					388	110	237.5	127.5	160	395.5	130	277.5	147.5	180
7002	433.5	90	193	103	129.5	461					468.5				
7003	481.5					-					-				
7004	529.5					-					-				

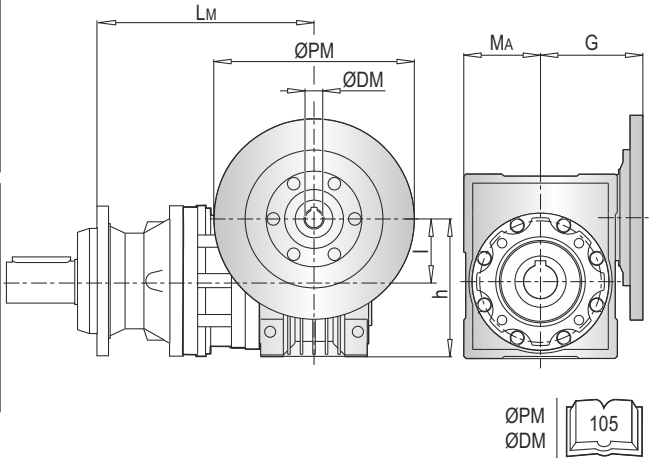

PL	PMRV/PRV ~ Kg					
	050	063	075	090	110	130
7001	-	-	-	-	114	131
7002	88	91.5	94	99	126	143
7003	94	97.5	100	105	-	-
7004	100	103.5	106	111	-	-

PLB 7000 PC - Elektrik Motor Adaptörleri (IEC) / Electric Motor Couplings (IEC) / Anbauvorrichtung Für Elektromotore (IEC) / Predisposizioni Per Motori Elettrici (IEC) / Adaptations Pour Moteurs Electriques (IEC) / Acoplamientos Para Motores Eléctricos (IEC)

PLB	IEC 80				IEC 90				IEC 100				IEC 112				IEC 132			
	A	LT	Z	ØD	A	LT	Z	ØD	A	LT	Z	ØD	A	LT	Z	ØD	A	LT	Z	ØD
7002	338	296	56	200	338	296	56	200	338	306	66	250	338	306	66	250	338	340	100	300
7003	384.5	216			384.5	216			384.5	226			384.5	226			384.5	260		
7004	432.5				432.5				432.5				432.5				432.5			

PLB	IEC 160				IEC 180			
	A	LT	Z	ØD	A	LT	Z	ØD
7002	338	379	139	350	338	379	139	350
7003	384.5	299			-			
7004	-				-			

PLB	IEC ~ Kg						
	80	90	100	112	132	160	180
7002	113	113	114	114	118	128	128
7003	102	102	103	103	107	117	-
7004	109	109	110	110	114	-	-

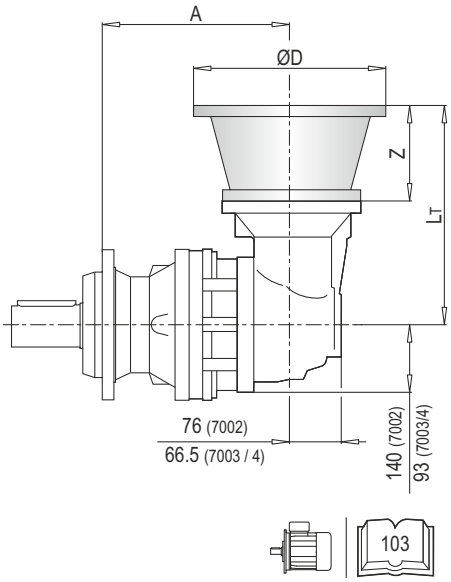

PLB 7000 PC - Giriş Milleri / Input Shafts / Antriebswellen / Alberi Entrata / Arbres D'entree / Ejes De Entrada

PLB	EL C 28					EL C 42					EML 42					EML 1"3/8 Z6					EM 65				
	A	LT	Z	L	Ød	A	LT	Z	L	Ød	A	LT	Z	L	Ød	A	LT	Z	L	Ød	A	LT	Z	L	Ød
7002	338	304	64	50	28	338	304	64	82	42	338	334	94	82	42	338	334	94	106	1"3/8	338	377.5	121.5	105	65
7003	384.5	224				384.5	224				384.5	254				384.5	254				384.5	297.5			
7004	432.5					432.5					432.5					432.5					432.5				

PLB	EM 1"3/8 Z6					EP 65				
	A	LT	Z	L	Ød	A	LT	Z	L	Ød
7002	338	377.5	121.5	105	1"3/8	338	409	153	105	65
7003	384.5	297.5				384.5	329			
7004	432.5					432.5				

PLB	~ Kg						
	EL C 28	EL C 42	EML 42	EML 1"3/8 Z6	EM 65	EM 1"3/8 Z6	EP 65
7002	111.5	112.0	115.0	115.0	123.0	123.0	132.0
7003	100.5	101.0	104.0	104.0	112.0	112.0	121.0
7004	107.5	108.0	111.0	111.0	119.0	119.0	128.0

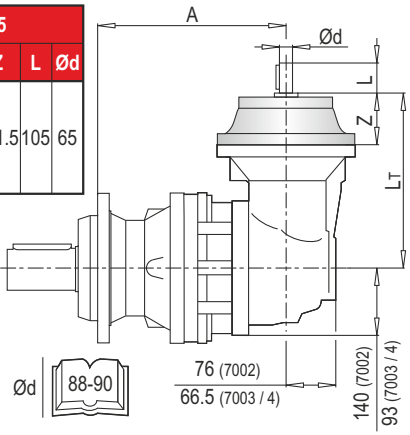

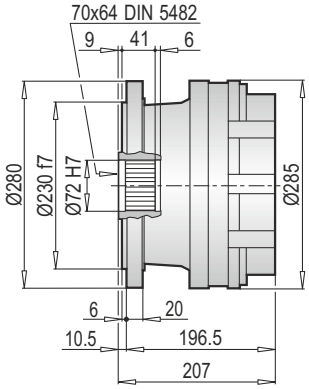

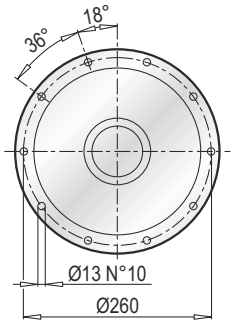

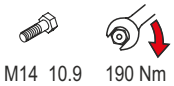

Aksesuarlar
Accessories
Zubehör
Accessori
Accessoires
Accesorios

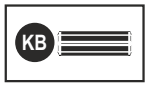

PL 7000 F - Elektrik Motor Adaptörleri (IEC) / Electrıc Motor Couplings (IEC) / Anbauvorrichtung Für Elektromotore (IEC) / Predisposizioni Per Motori Elettrici (IEC) / Adaptations Pour Moteurs Electriques (IEC) / Acoplamientos Para Motores Eléctricos (IEC)

PL	IEC 63			IEC 71			IEC 80			IEC 90			IEC 100		
	LT	Z	ØD	LT	Z	ØD	LT	Z	ØD	LT	Z	ØD	LT	Z	ØD
7001	-			-			-			-			-		
7002	292	36	140	292	36	160	312	56	200	312	56	200	322	66	250
7003	340			340			360			360			370		
7004	388			388			408			408			418		

PL	IEC 112			IEC 132			IEC 160			IEC 180			IEC 200		
	LT	Z	ØD	LT	Z	ØD	LT	Z	ØD	LT	Z	ØD	LT	Z	ØD
7001	-			-			314.5	118	350	314.5	118	350	344.5	148	400
7002	322	66	250	356	100	300	395	139	350	395	139	350	-		
7003	370			404			443			-			-		
7004	418			452			-			-			-		

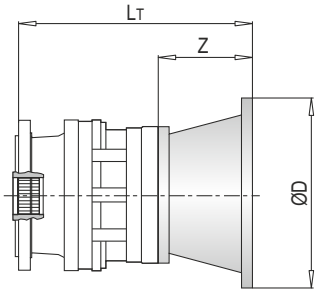

PL	IEC ~ Kg									
	63	71	80	90	100	112	132	160	180	200
7001	-	-	-	-	-	-	-	72	72	82
7002	67	67	69	69	70	70	74	84	84	-
7003	73	73	75	75	76	76	80	90	-	-
7004	79	79	81	81	82	82	86	-	-	-

PL 7000 F - Giriş Milleri / Input Shafts / Antriebswellen / Alberi Entrata / Arbres D'entree / Ejes De Entrada

PL	EL C 28				EL C 42				EML 42				EML 1"3/8 Z6				EM 65				EM 1"3/8 Z6			
	LT	Z	L	Ød	LT	Z	L	Ød	LT	Z	L	Ød	LT	Z	L	Ød	LT	Z	L	Ød	LT	Z	L	Ød
7001	-				-				-				-				318	121.5	105	65	318	121.5	105	1"3/8
7002	320	64	50	28	320	64	82	42	350	94	82	42	350	94	106	1"3/8	391				391			
7003	368				368				398				398				-				-			
7004	416				416				446				446				-				-			

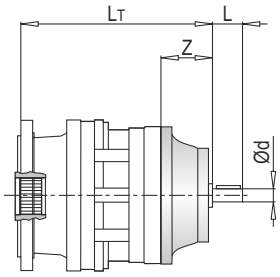

PL	EP 65			
	LT	Z	L	Ød
7001	349.5	153	105	65
7002	422.5			
7003	-			
7004	-			

PL	~ Kg						
	EL C 28	EL C 42	EML 42	EML 1"3/8 Z6	EM 65	EM 1"3/8 Z6	EP 65
7001	-	-	-	-	67.0	67.0	76.0
7002	67.5	68.0	71.0	71.0	79.0	79.0	88.0
7003	73.5	74.0	77.0	77.0	-	-	-
7004	79.5	80.0	83.0	83.0	-	-	-

PL 7000 F - Sonsuz Dişlili Redüktör Adaptörleri (PMRV/PRV) / Worm Gearbox Adaptors (PMRV/PRV) / Anschluss Für Schneckengetriebe (PMRV/PRV) / Predisposizioni Per Riduttori A Vite Senza Fine (PMRV/PRV) / Adaptation Pour Reducteurs A Vis Sans Fin (PMRV/PRV) / Acoplamiento Para Reductores De Tornillo Sin Fin (PMRV/PRV)

PL	PMRV/PRV 050					PMRV/PRV 063					PMRV/PRV 075				
	LM	l	h	MA	G	LM	l	h	MA	G	LM	l	h	MA	G
7001	-					-					-				
7002	381.5	50	110	60	80	391	63	135	72	95	370	75	161	86	112.5
7003	429.5					439					418				
7004	477.5					487					466				

PL	PMRV/PRV 090					PMRV/PRV 110					PMRV/PRV 130				
	LM	l	h	MA	G	LM	l	h	MA	G	LM	l	h	MA	G
7001	-					334.5	110	237.5	127.5	160	342	130	277.5	147.5	180
7002	380	90	193	103	129.5	407.5					415				
7003	428					-					-				
7004	476					-					-				

PL	PMRV/PRV~ Kg					
	050	063	075	090	110	130
7001	-	-	-	-	96	113
7002	70	73.5	76	81	108	125
7003	76	79.5	82	87	-	-
7004	82	85.5	88	93	-	-

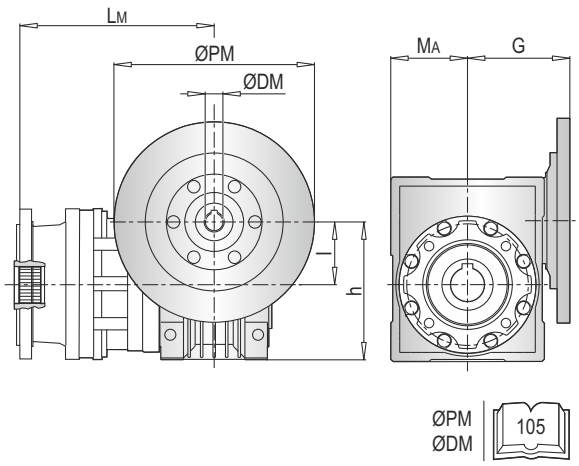

PLB 7000 F - Elektrik Motor Adaptörleri (IEC) / Electric Motor Couplings (IEC) / Anbauvorrichtung Für Elektromotore (IEC) / Predisposizioni Per Motori Elettrici (IEC) / Adaptations Pour Moteurs Electriques (IEC) / Acoplamientos Para Motores Eléctricos (IEC)

PLB	IEC 80				IEC 90				IEC 100				IEC 112				IEC 132			
	A	LT	Z	ØD	A	LT	Z	ØD	A	LT	Z	ØD	A	LT	Z	ØD	A	LT	Z	ØD
7002	284.5	296	56	200	284.5	296	56	200	284.5	306	66	250	284.5	306	66	250	284.5	340	100	300
7003	331	216			331	216			331	226			331	226			331	260		
7004	379				379				379				379				379			

PLB	IEC 160				IEC 180			
	A	LT	Z	ØD	A	LT	Z	ØD
7002	284.5	379	139	350	284.5	379	139	350
7003	331	299			-			
7004	-				-			

PLB	IEC ~ Kg						
	80	90	100	112	132	160	180
7002	94	94	95	95	99	109	109
7003	84	84	85	85	89	99	-
7004	90	90	91	91	95	-	-

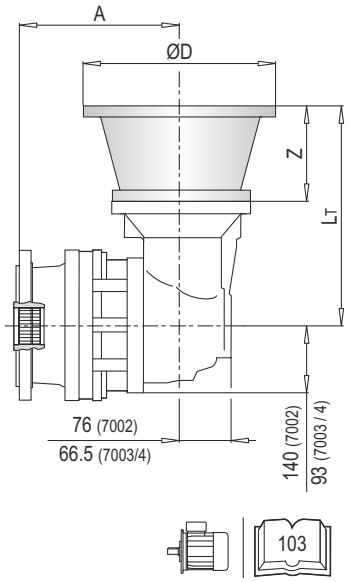

PLB 7000 F - Giriş Milleri / Input Shafts / Antriebswellen / Alberi Entrata / Arbres D'entree / Ejes De Entrada

PLB	EL C 28					EL C 42					EML 42					EML 1"3/8 Z6					EM 65				
	A	LT	Z	L	Ød	A	LT	Z	L	Ød	A	LT	Z	L	Ød	A	LT	Z	L	Ød	A	LT	Z	L	Ød
7002	284.5	304	64	50	28	284.5	304	64	82	42	284.5	334	94	82	42	284.5	334	94	106	1"3/8	284.5	361.5	121.5	105	65
7003	331	224				331	224				331	254				331	254				331	297.5			
7004	379					379					379					379					379				

PLB	EM 1"3/8 Z6					EP 65				
	A	LT	Z	L	Ød	A	LT	Z	L	Ød
7002	284.5	377.5	121.5	105	1"3/8	284.5	409	153	105	65
7003	331	297.5				331	329			
7004	379					379				

PLB	~ Kg						
	EL C 28	EL C 42	EML 42	EML 1"3/8 Z6	EM 65	EM 1"3/8 Z6	EP 65
7002	92.5	93.0	96.0	96.0	104.0	104.0	113.0
7003	82.5	83.0	86.0	86.0	94.0	94.0	103.0
7004	88.5	89.0	92.0	92.0	100.0	100.0	109.0

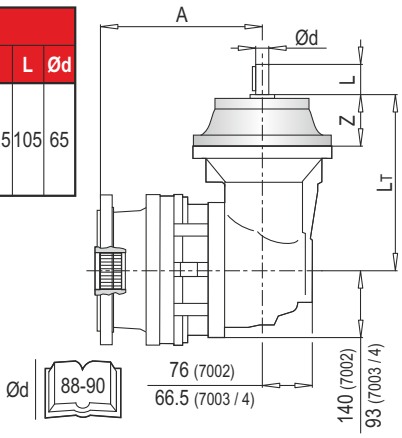

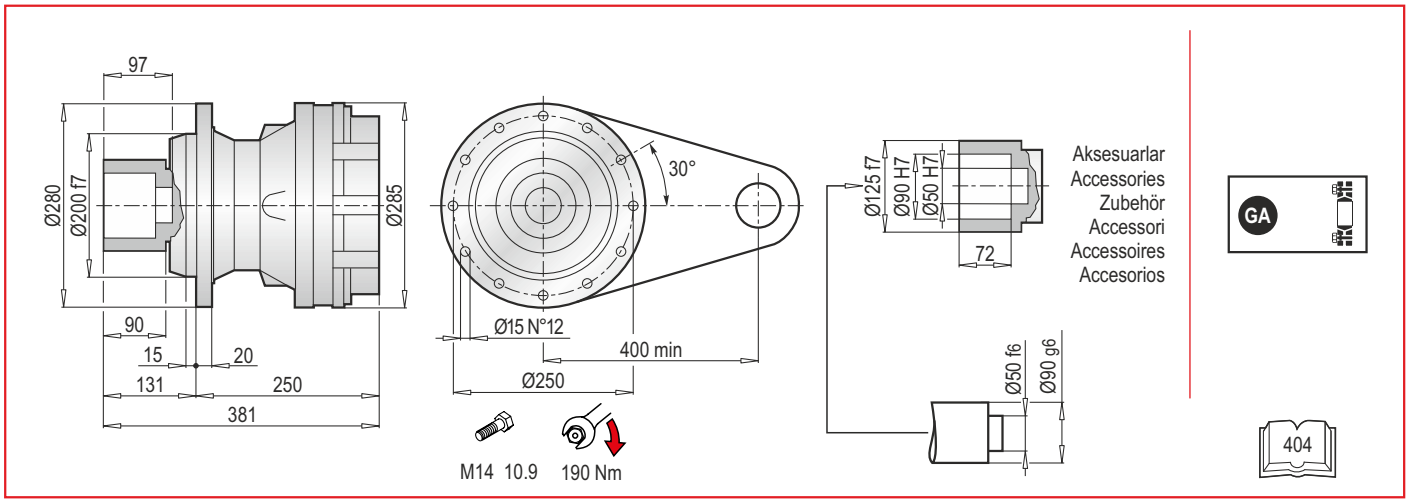

PL 7000 FS - Elektrik Motor Adaptörleri (IEC) / Electric Motor Couplings (IEC) / Anbauvorrichtung Für Elektromotore (IEC) / Predisposizioni Per Motori Elettrici (IEC) / Adaptations Pour Moteurs Electriques (IEC) / Acoplamientos Para Motores Eléctricos (IEC)

PL	IEC 63			IEC 71			IEC 80			IEC 90			IEC 100		
	LT	Z	ØD	LT	Z	ØD	LT	Z	ØD	LT	Z	ØD	LT	Z	ØD
7001	-			-			-			-			-		
7002	345.5	36	140	345.5	36	160	365.5	56	200	365.5	56	200	375.5	66	250
7003	393.5			393.5			413.5			413.5			423.5		
7004	441.5			441.5			461.5			461.5			471.5		

PL	IEC 112			IEC 132			IEC 160			IEC 180			IEC 200		
	LT	Z	ØD	LT	Z	ØD	LT	Z	ØD	LT	Z	ØD	LT	Z	ØD
7001							368	118	350	368	118	350	398	148	400
7002	375.5	66	250	409.5	100	300	448.5	139	350	448.5	139	350	-		
7003	423.5			457.5			496.5			-			-		
7004	471.5			505.5			-			-			-		

PL	IEC ~ Kg									
	63	71	80	90	100	112	132	160	180	200
7001	-	-	-	-	-	-	-	93	93	103
7002	88	88	90	90	91	91	95	105	105	-
7003	94	94	96	96	97	97	101	111	-	-
7004	100	100	102	102	103	103	107	-	-	-

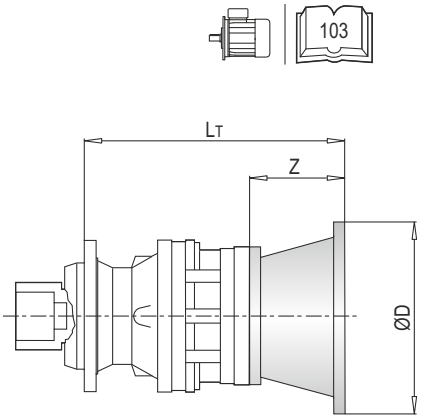

PL 7000 FS - Giriş Milleri / Input Shafts / Antriebswellen / Alberi Entrata / Arbres D'entree / Ejes De Entrada

PL	EL C 28				EL C 42				EML 42				EML 1"3/8 Z6				EM 65				EM 1"3/8 Z6			
	LT	Z	L	Ød	LT	Z	L	Ød	LT	Z	L	Ød	LT	Z	L	Ød	LT	Z	L	Ød	LT	Z	L	Ød
7001	-				-				-				-				371.5	121.5	105	65	371.5	121.5	105	1"3/8
7002	373.5	64	50	28	373.5	64	82	42	403.5	94	82	42	403.5	94	106	1"3/8	444.5				444.5			
7003	421.5				421.5				451.5				451.5				-				-			
7004	469.5				469.5				499.5				499.5				-				-			

PL	EP 65			
	LT	Z	L	Ød
7001	403	153	105	65
7002	476			
7003	-			
7004	-			

PL	~ Kg						
	EL C 28	EL C 42	EML 42	EML 1"3/8 Z6	EM 65	EM 1"3/8 Z6	EP 65
7001	-	-	-	-	85.0	85.0	94.0
7002	85.5	86.0	89.0	89.0	97.0	97.0	106.0
7003	91.5	92.0	95.0	95.0	-	-	-
7004	97.5	98.0	101.0	101.0	-	-	-

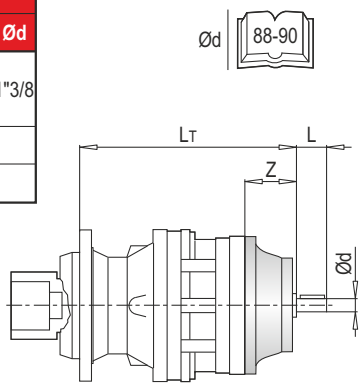

PL 7000 FS - Sonsuz Dişlili Redüktör Adaptörleri (PMRV/PRV) / Worm Gearbox Adaptors (PMRV/PRV) / Anschluss Für Schneckengetriebe (PMRV/PRV) / Predisposizioni Per Riduttori A Vite Senza Fine (PMRV/PRV) / Adaptation Pour Reducteurs A Vis Sans Fin (PMRV/PRV) / Acoplamiento Para Reductores De Tornillo Sin Fin (PMRV/PRV)

PL	PMRV/PRV 050					PMRV/PRV 063					PMRV/PRV 075				
	LM	l	h	MA	G	LM	l	h	MA	G	LM	l	h	MA	G
7001	-					-					-				
7002	435	50	110	60	80	444.5	63	135	72	95	423.5	75	161	86	112.5
7003	483					492.5					471.5				
7004	531					540.5					519.5				

PL	PMRV/PRV 090					PMRV/PRV 110					PMRV/PRV 130				
	LM	l	h	MA	G	LM	l	h	MA	G	LM	l	h	MA	G
7001	-					388	110	237.5	127.5	160	395.5	130	277.5	147.5	180
7002	433.5	90	193	103	129.5	461					468.5				
7003	481.5					-					-				
7004	529.5					-					-				

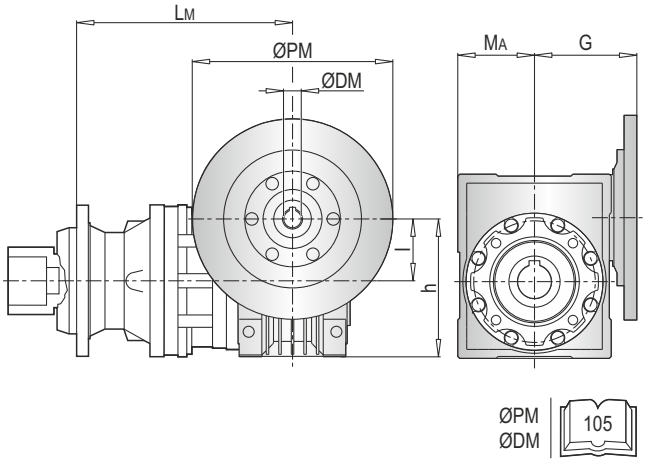

PL	PMRV/PRV~ Kg					
	050	063	075	090	110	130
7001	-	-	-	-	117	134
7002	91	94.5	97	102	129	146
7003	97	100.5	103	108	-	-
7004	103	106.5	109	114	-	-

PLB 7000 FS - Elektrik Motor Adaptörleri (IEC) / Electric Motor Couplings (IEC) /Anbauvorrichtung Für Elektromotore (IEC) / Predisposizioni Per Motori Elettrici (IEC) / Adaptations Pour Moteurs Electriques (IEC) /Acoplamientos Para Motores Eléctricos (IEC)

PLB	IEC 80				IEC 90				IEC 100				IEC 112				IEC 132			
	A	LT	Z	ØD	A	LT	Z	ØD	A	LT	Z	ØD	A	LT	Z	ØD	A	LT	Z	ØD
7002	338	296	56	200	338	296	56	200	338	306	66	250	338	306	66	250	338	340	100	300
7003	384.5	216			384.5	216			384.5	226			384.5	226			384.5	260		
7004	432.5				432.5				432.5				432.5				432.5			

PLB	IEC 160				IEC 180			
	A	LT	Z	ØD	A	LT	Z	ØD
7002	338	379	139	350	338	379	139	350
7003	384.5	299			-			
7004	-				-			

PLB	IEC ~ Kg						
	80	90	100	112	132	160	180
7002	116	116	117	117	121	131	131
7003	105	105	106	106	110	120	-
7004	112	112	113	113	117	-	-

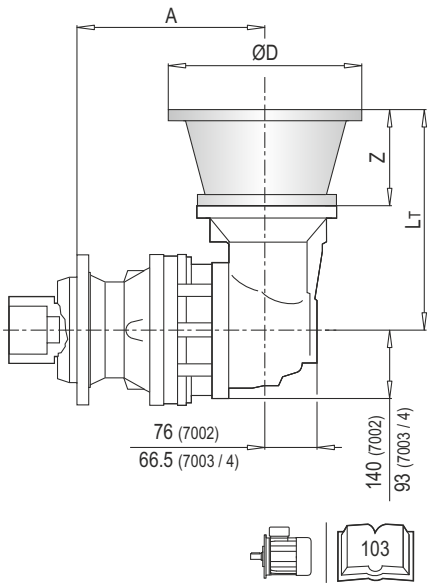

PLB 7000 FS - Giriş Milleri / Input Shafts / Antriebswellen / Alberi Entrata / Arbres D'entree / Ejes De Entrada

PLB	EL C 28					EL C 42					EML 42					EML 1"3/8 Z6					EM 65				
	A	LT	Z	L	Ød	A	LT	Z	L	Ød	A	LT	Z	L	Ød	A	LT	Z	L	Ød	A	LT	Z	L	Ød
7002	338	304	64	50	28	338	304	64	82	42	338	334	94	82	42	338	334	94	106	1"3/8	338	377.5	121.5	105	65
7003	384.5	224				384.5	224				384.5	254				384.5	254				384.5	297.5			
7004	432.5					432.5					432.5					432.5					432.5				

PLB	EM 1"3/8 Z6					EP 65				
	A	LT	Z	L	Ød	A	LT	Z	L	Ød
7002	338	377.5	121.5	105	1"3/8	338	409	153	105	65
7003	384.5	297.5				384.5	329			
7004	432.5					432.5				

PLB	~ Kg						
	EL C 28	EL C 42	EML 42	EML 1"3/8 Z6	EM 65	EM 1"3/8 Z6	EP 65
7002	114.5	115.0	118.0	118.0	126.0	126.0	135.0
7003	103.5	104.0	107.0	107.0	115.0	115.0	124.0
7004	110.5	111.0	114.0	114.0	122.0	122.0	131.0

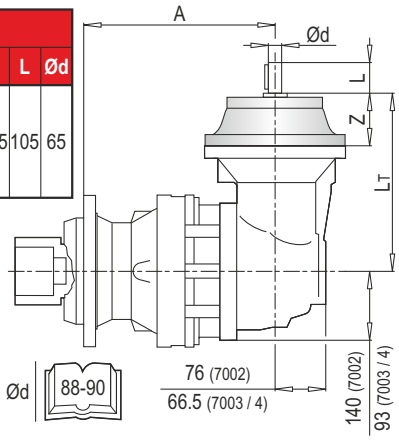

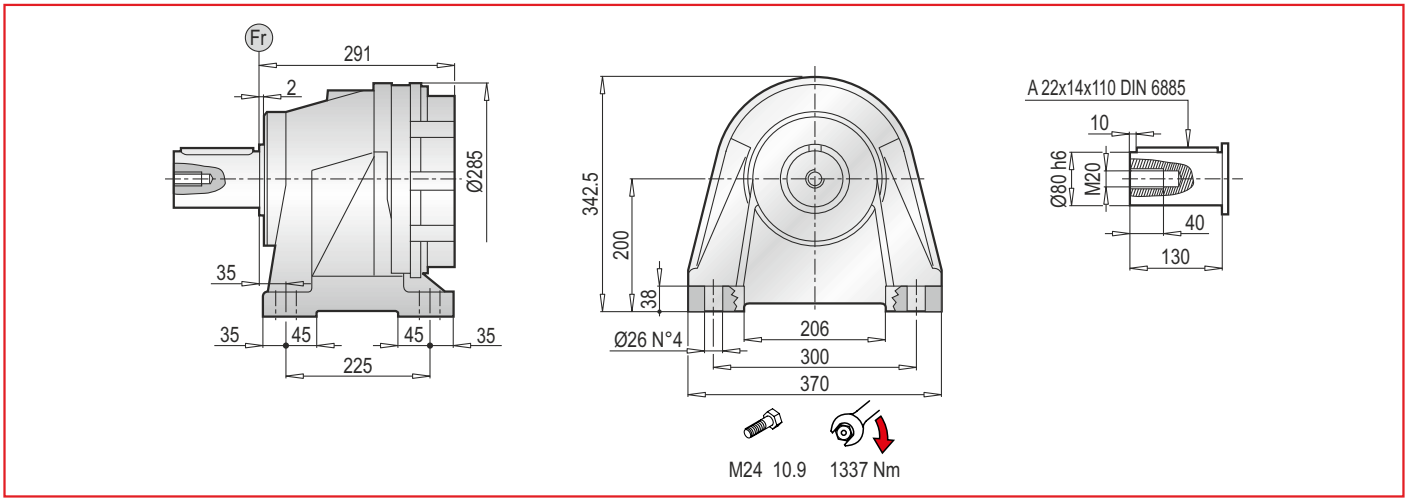

PL 7000 CPC - Elektrik Motor Adaptörleri (IEC) / Electrıc Motor Couplings (IEC) / Anbauvorrichtung Für Elektromotore (IEC) / Predisposizioni Per Motori Elettrici (IEC) / Adaptations Pour Moteurs Electriques (IEC) / Acoplamientos Para Motores Eléctricos (IEC)

PL	IEC 63			IEC 71			IEC 80			IEC 90			IEC 100		
	LT	Z	ØD	LT	Z	ØD	LT	Z	ØD	LT	Z	ØD	LT	Z	ØD
7001	-			-			-			-			-		
7002	386.5	36	140	386.5	36	160	406.5	56	200	406.5	56	200	416.5	66	250
7003	434.5			434.5			454.5			454.5			464.5		
7004	482.5			482.5			502.5			502.5			512.5		

PL	IEC 112			IEC 132			IEC 160			IEC 180			IEC 200		
	LT	Z	ØD	LT	Z	ØD	LT	Z	ØD	LT	Z	ØD	LT	Z	ØD
7001	-			-			409	118	350	409	118	350	439	148	400
7002	416.5	66	250	450.5	100	300	489.5	139	350	489.5	139	350	-		
7003	464.5			498.5			537.5			-			-		
7004	512.5			546.5			-			-			-		

PL	IEC ~ Kg									
	63	71	80	90	100	112	132	160	180	200
7001	-	-	-	-	-	-	-	106	106	116
7002	101	101	103	103	104	104	108	118	118	-
7003	108	108	110	110	111	111	115	125	-	-
7004	114	114	116	116	117	117	121	-	-	-

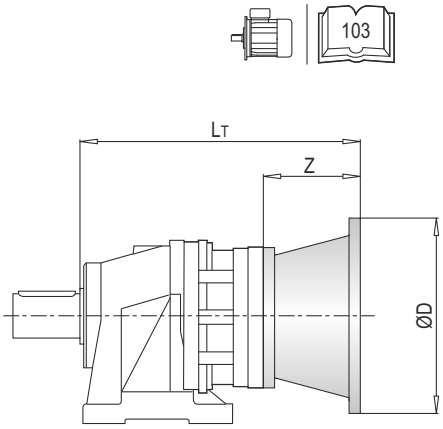

PL 7000 CPC - Giriş Milleri / Input Shafts / Antriebswellen / Alberi Entrata / Arbres D'entree / Ejes De Entrada

PL	EL C 28				EL C 42				EML 42				EML 1"3/8 Z6				EM 65				EM 1"3/8 Z6			
	LT	Z	L	Ød	LT	Z	L	Ød	LT	Z	L	Ød	LT	Z	L	Ød	LT	Z	L	Ød	LT	Z	L	Ød
7001	-				-				-				-				412.5	121.5	105	65	412.5	121.5	105	1"3/8
7002	414.5	64	50	28	414.5	64	82	42	444.5	94	82	42	444.5	94	106	1"3/8	485.5				485.5			
7003	462.5				462.5				492.5				492.5				-				-			
7004	510.5				510.5				540.5				540.5				-				-			

PL	EP 65			
	LT	Z	L	Ød
7001	444	153	105	65
7002	517			
7003	-			
7004	-			

PL	~ Kg						
	EL C 28	EL C 42	EML 42	EML 1"3/8 Z6	EM 65	EM 1"3/8 Z6	EP 65
7001	-	-	-	-	101.0	101.0	110.0
7002	101.5	102.0	105.0	105.0	113.0	113.0	122.0
7003	108.5	109.0	112.0	112.0	-	-	-
7004	114.5	115.0	118.0	118.0	-	-	-

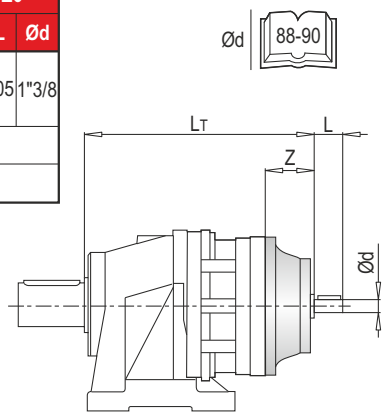

PL 7000 CPC - Sonsuz Dişlili Redüktör Adaptörleri (PMRV/PRV) / Worm Gearbox Adaptors (PMRV/PRV) / Anschluss Für Schneckengetriebe (PMRV/PRV) / Predisposizioni Per Riduttori A Vite Senza Fine (PMRV/PRV) / Adaptation Pour Reducteurs A Vis Sans Fin (PMRV/PRV) / Acoplamiento Para Reductores De Tornillo Sin Fin (PMRV/PRV)

PL	PMRV/PRV 050					PMRV/PRV 063					PMRV/PRV 075				
	LM	l	h	MA	G	LM	l	h	MA	G	LM	l	h	MA	G
7001	-					-					-				
7002	476	50	110	60	80	485.5	63	135	72	95	464.5	75	161	86	112.5
7003	524					533.5					512.5				
7004	572					571.5					560.5				

PL	PMRV/PRV 090					PMRV/PRV 110					PMRV/PRV 130				
	LM	l	h	MA	G	LM	l	h	MA	G	LM	l	h	MA	G
7001	-					429	110	237.5	127.5	160	436.5	130	277.5	147.5	180
7002	474.5	90	193	103	129.5	502					509.5				
7003	522.5					-					-				
7004	570.5					-					-				

PL	PMRV/PRV~ Kg					
	050	063	075	090	110	130
7001	-	-	-	-	130	147
7002	104	107.5	110	115	142	159
7003	111	114.5	117	122	-	-
7004	117	120.5	123	128	-	-

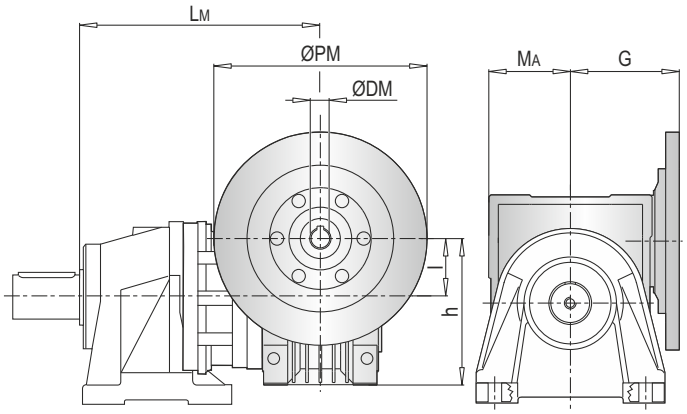

ØPM
ØDM
105

PLB 7000 CPC - Elektrik Motor Adaptörleri (IEC) / Electric Motor Couplings (IEC) / Anbauvorrichtung Für Elektromotore (IEC) / Predisposizioni Per Motori Elettrici (IEC) / Adaptations Pour Moteurs Electriques (IEC) / Acoplamientos Para Motores Eléctricos (IEC)

PLB	IEC 80				IEC 90				IEC 100				IEC 112				IEC 132			
	A	LT	Z	ØD	A	LT	Z	ØD	A	LT	Z	ØD	A	LT	Z	ØD	A	LT	Z	ØD
7002	379	296	56	200	379	296	56	200	379	306	66	250	379	306	66	250	379	340	100	300
7003	425.5	216			425.5	216			425.5	226			425.5	226			425.5	260		
7004	473.5				473.5				473.5				473.5				473.5			

PLB	IEC 160				IEC 180			
	A	LT	Z	ØD	A	LT	Z	ØD
7002	379	379	139	350	379	379	139	350
7003	425.5	299			-			
7004	-				-			

PLB	IEC ~ Kg						
	80	90	100	112	132	160	180
7002	129	129	130	130	134	144	144
7003	119	119	120	120	124	134	-
7004	125	125	126	126	130	-	-

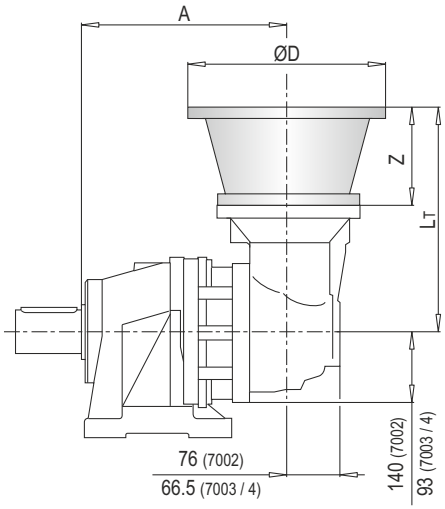

103

PLB 7000 CPC - Giriş Milleri / Input Shafts / Antriebswellen / Alberi Entrata / Arbres D'entree / Ejes De Entrada

PLB	EL C 28					EL C 42					EML 42					EML 1"3/8 Z6					EM 65				
	A	LT	Z	L	Ød	A	LT	Z	L	Ød	A	LT	Z	L	Ød	A	LT	Z	L	Ød	A	LT	Z	L	Ød
7002	379	304	64	50	28	379	304	64	82	42	379	334	94	82	42	379	334	94	106	1"3/8	379	377.5	121.5	105	65
7003	425.5	224				425.5	224				425.5	254				425.5	254				425.5	297.5			
7004	473.5					473.5					473.5					473.5					473.5				

PLB	EM 1"3/8 Z6					EP 65				
	A	LT	Z	L	Ød	A	LT	Z	L	Ød
7002	379	377.5	121.5	105	1"3/8	379	409	153	105	65
7003	425.5	297.5				425.5	329			
7004	473.5					473.5				

PLB	~ Kg						
	EL C 28	EL C 42	EML 42	EML 1"3/8 Z6	EM 65	EM 1"3/8 Z6	EP 65
7002	127.5	128.0	131.0	131.0	139.0	139.0	148.0
7003	117.5	118.0	121.0	121.0	129.0	129.0	128.0
7004	123.5	124.0	127.0	127.0	135.0	135.0	144.0

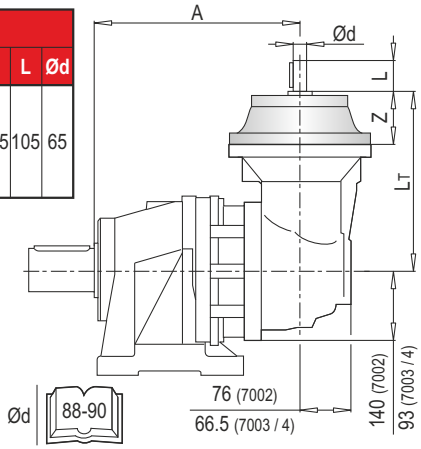

Ød
88-90

PL	~ Kg PS
7001	68
7002	80
7003	86
7004	92

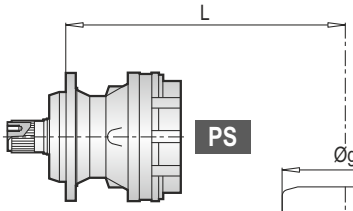

PL	~ Kg PC
7001	68
7002	80
7003	86
7004	92

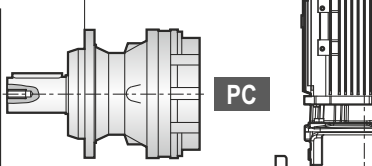

PL	~ Kg F
7001	50
7002	62
7003	68
7004	74

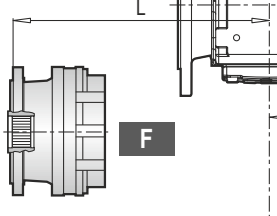

PL	~ Kg FS
7001	71
7002	83
7003	89
7004	95

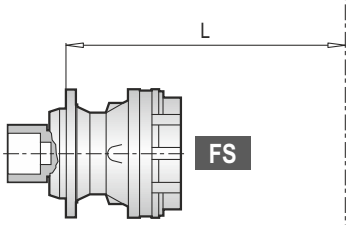

PL	~ Kg CPC
7001	84
7002	96
7003	103
7004	109

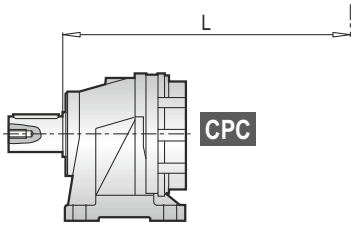

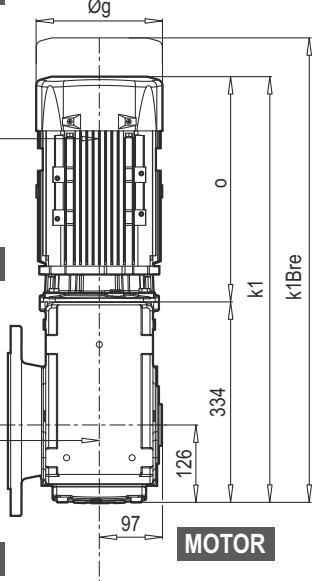

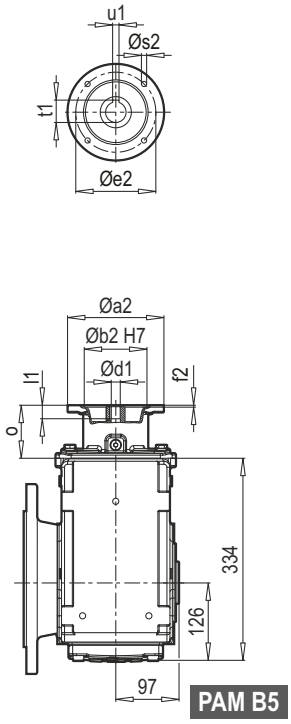

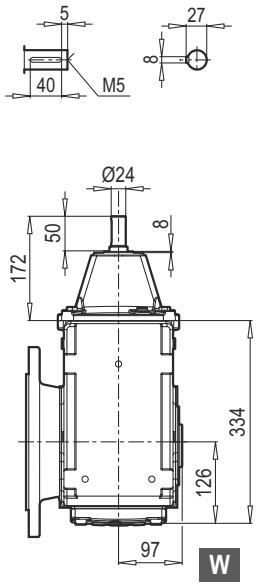

W ~ Kg	
PKD 3390	71

PL	L				
	PS	PC	F	FS	CPC
7001	427	427	374	427	468
7002	508	508	454	508	549
7003	556	556	502	556	597
7004	604	604	550	604	645

	MOTOR	g	g1	k1	k1Bre	o
PKD 3390	71 M	140	119	570	630	236
	80 M	159	127	596	658	262
	90 S	193	151	619	692	285
	90 L	193	151	639	712	305
	100 L	217	160	667	748	333
	112 M	232	168	712	792	378
	132 S	279	182	719	827	385
	132 M	279	182	754	895	420

~ Kg	
MOTOR	PKD 3390
71 M	71
80 M	73
90 S	75
90 L	77
100 L	89
112 M	96
132 S	112
132 M	123

	PAM B5	Øa2	Øb2	Øe2	f2	Øs2	Ød1	l1	t1	u1	o
PKD 3390	71	160	110	130	4.0	M8	14	30	16.3	5	88
	80	200	130	165	4.0	M10	19	40	21.8	6	72
	90	200	130	165	4.0	M10	24	50	27.3	8	72
	100	250	180	215	5.0	M12	28	60	31.3	8	75
	112	250	180	215	5.0	M12	28	60	31.3	8	75
	132	300	230	265	5.0	M12	38	80	41.3	10	94

~ Kg	
PAM B5	PKD 3390
71	65
80	66
90	66
100	67
112	67
132	77

PL	~ Kg PS
7001	68
7002	80
7003	86
7004	92

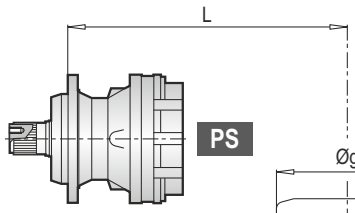

PL	~ Kg PC
7001	68
7002	80
7003	86
7004	92

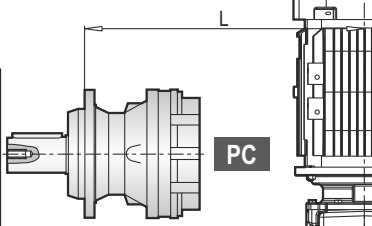

PL	~ Kg F
7001	50
7002	62
7003	68
7004	74

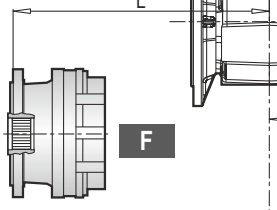

PL	~ Kg FS
7001	71
7002	83
7003	89
7004	95

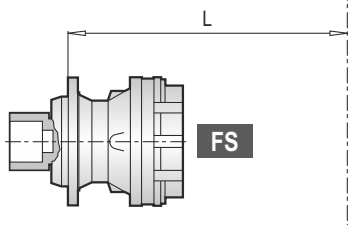

PL	~ Kg CPC
7001	84
7002	96
7003	103
7004	109

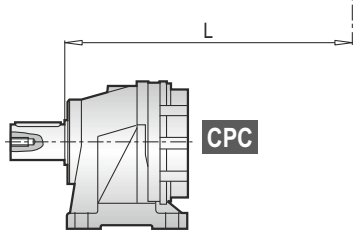

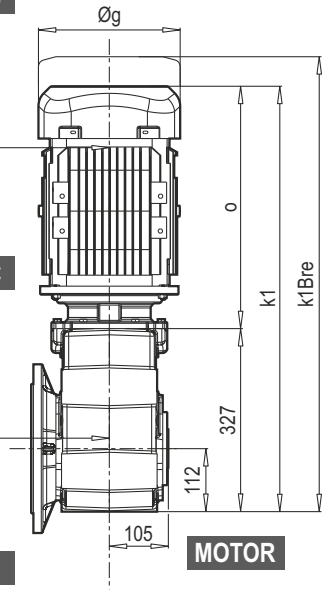

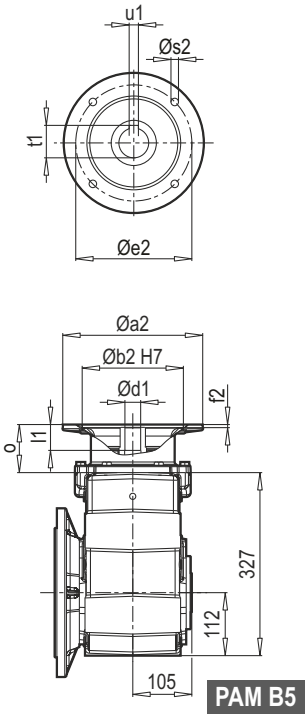

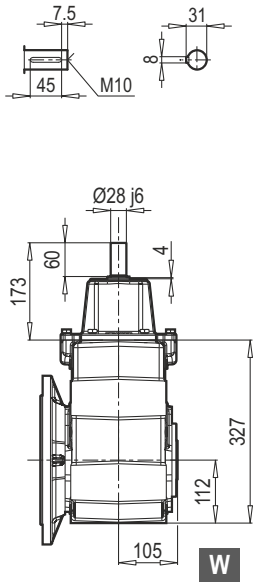

PL	L				
	PS	PC	F	FS	CPC
7001	448	448	395	448	489
7002	508	508	454	508	549
7003	556	556	502	556	597
7004	604	604	550	604	645

W ~ Kg	
K 50390	61

	MOTOR	g	g1	k1	k1Bre	o
K 50390	80 M	159	127	574	636	247
	90 S	193	151	620	693	293
	90 L	193	151	640	713	313
	100 L	217	160	663	744	336
	112 M	232	168	716	796	389
	132 S	279	182	723	831	396
	132 M	279	182	758	899	431
	160 M/L	323	200	845	997	518

~ Kg	
MOTOR	K 50390
80 M	64
90 S	67
90 L	69
100 L	80
112 M	89
132 S	103
132 M	114
160 M/L	154

	PAM B5	Øa2	Øb2	Øe2	f2	Øs2	Ød1	l1	t1	u1	o
K 50390	80	200	130	165	5	M10	19	42	21.8	6	70
	90	200	130	165	5	M10	24	52	27.3	8	70
	100	250	180	215	5.5	M12	28	62	31.3	8	85
	112	250	180	215	5.5	M12	28	62	31.3	8	85
	132	300	230	265	5.5	M12	38	82	41.3	10	110
	160	350	250	300	7	M16	42	112	45.3	12	158

~ Kg	
PAM B5	K 50390
80	59
90	59
100	61
112	61
132	65
160	72

AKSESUARLAR / ACCESSORIES / ZUBEHÖR / ACCESSORI / ACCESSOIRES / ACCESORIOS

YZ
Pinyon / Pinion / Ritzel
Pignoni / Pignon / Piñones

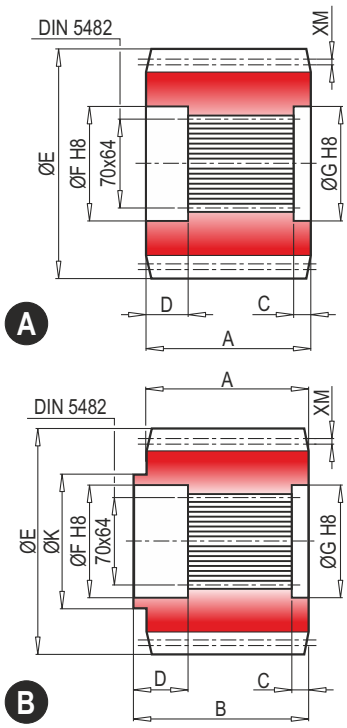

	Çıkış tipi Output type Abtriebs-version Versione Version Versión	M	Z	XM	A	B	C	D	E	F	G	K	Malzeme Material Material Materiale Matière Material	Kod Code Bestell-Nr. Codice Code Código
A	P	10	11	8.06	90	-	10	31	142.1	72	72	-	18NiCrMo5	1071.267.042
B	P	10	11	8.06	90	99	18.5	31	142.1	72	72	84	18NiCrMo5	1071.285.042
A	P	10	12	0	90	-	10	31	140	72	72	-	38NiCrMo4	1071.166.042
	P	10	13	0	90	-	10	30	155	72	72	-	38NiCrMo4	1071.201.042

FF
Sabitleme rondelası / Stop bottom plate / Endscheibe /
Fondello di arresto / Bouchon de fermeture / Tapón de detención

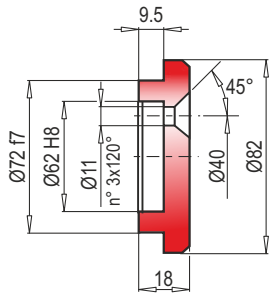

Kod / Code
Bestell - Nr. / Codice
Code / Código
1075.012.000

BS
Spline kaplin / Splined bushing / Innenverzahnte Buchse /
Boccola scanalata / Moyeu cannelé / Casquillo ranurado

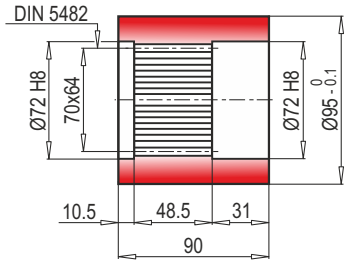

Malzeme / Material
Material / Materiale
Matière / Material
UNI C40
SAE 1040
DIN Ck40

Kod / Code
Bestell - Nr. / Codice
Code / Código
5171.102.076

KB
Spline mil / Splined rod / Außenverzahnte Welle /
Barra scanalata / Arbre cannelé / Barra ranurada

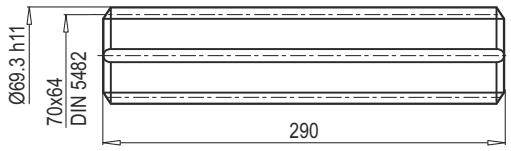

Malzeme / Material
Material / Materiale
Matière / Material

UNI 39NiCrMo3
Sertleşmiş ve tavlanmış / Hardened and tempered
Vergütet / Bonifié
Bonificado / Endurecido e temperado

Kod / Code
Bestell - Nr. / Codice
Code / Código
3071.405.042

FL
Flanş / Flange / Flansch
Flangia / Bride / Brida

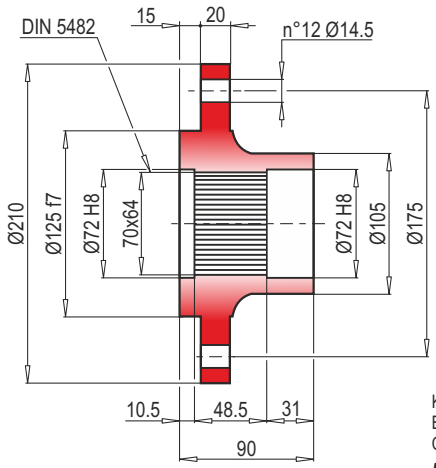

Kod / Code
Bestell - Nr. / Codice
Code / Código
5171.108.098

GA
Konik sıktırma / Shrink disc / Schrumpfscheibe /
Giunto di attrito / Frette de serrage / Disco de contracción

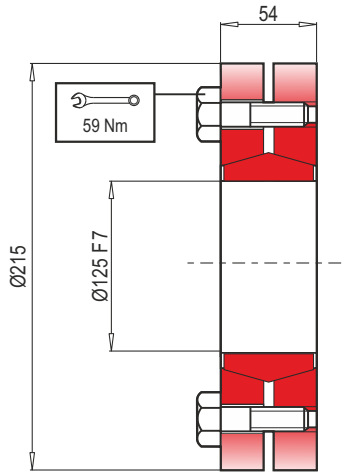

Maksimum moment
Max. torque
Max. Drehmoment
Coppia max.
Couple max.
Momento máx.
2.2 kNm

Kod / Code
Bestell - Nr. / Codice
Code / Código
5109.125.000

TR RADYAL YÜKLER (Fr)

Aşağıdaki grafikler istenilen $n_2$xh değerinin elde edilmesi için gerekli olan radyal yükleri ve K faktörlerini göstermektedir.

EN RADIAL LOADS (Fr)

The following curves show the radial loads and the K factors to obtain the required n2xh value.

DE RADIALLAST (Fr)

In den nachstehenden Diagrammen ist die Radiallast un der Koeffizient K dargestellt und kann mit dem gewünschten Wert $n_2$xh verglichen werden.

IT CARICHI RADIALI (Fr)

Nei diagrammi seguenti sono riportati i carichi radiali e i coefficienti K per rapportarli al valore $n_2$xh desiderato.

FR CHARGES RADIALES (Fr)

Dans les diagrammes suivants sont indiqués les charges radiales et les facteurs K de façon à obtenir la valeur $n_2$xh désirée.

ES CARGAS RADIALES (Fr)

En los siguientes diagramas se indican las cargas radiales y los coefici - entes K para obtener el valor requerido $n_2$xh.

P - CPC*

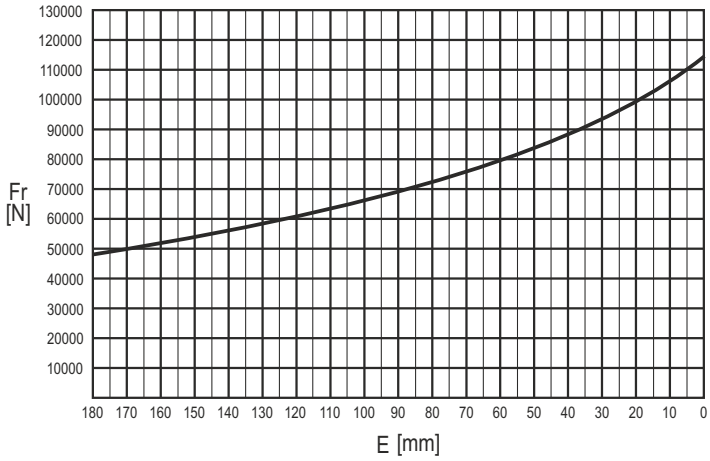

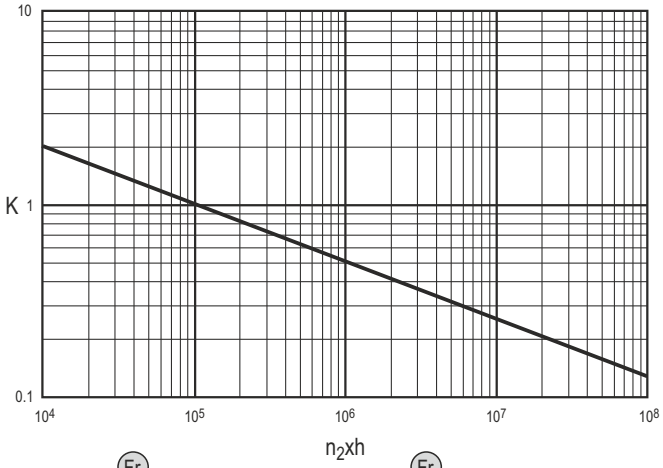

	n x h				
	10^5	10^4	10^6	10^7	10^8
P	Fr	Fr • K			
CPC*	Fr • 0.75	Fr • K • 0.75			

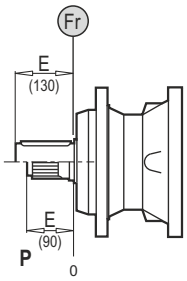

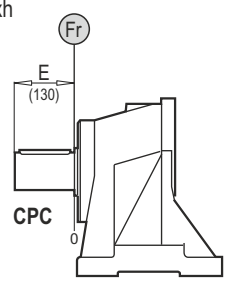

TR EKSENEL YÜKLER (Fa)

Tabloda yer alan eksenel yük değerleri, çıkış tipine ve uygulamanın yük yönüne göre değişir.

EN AXIAL LOADS (Fa)

The values of the axial loads in the table refer to the output versions and load direction of application.

DE AXIALLAST (Fa)

Die dargestellten Werte der Axiallast basieren auf der Version und der applizierten Lastrichtung.

IT CARICHI ASSIALI (Fa)

I valori dei carichi assiali indicati in tabella sono riferiti alle versioni e alla direzione di applicazione del carico.

FR CHARGES AXIALES (Fa)

Les valeurs des charges axiales indiquées dans le tableau se réfèrent aux versions et à la direction d'application de lacharge.

ES CARGAS AXIALES (Fa)

Los valores de las cargas axiales indicados en la tabla se refieren a las versiones y a la dirección de aplicación de la carga.

Fa [N]	P	CPC
	40000	40000
	60000	60000

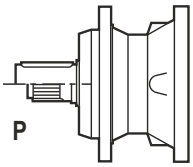

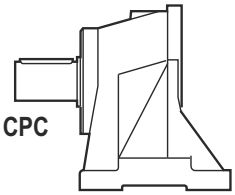

TEKNİK VERİLER / TECHNICAL DATA / TECHNISCHE DATEN / DATI TECNICI / DONNÉES TECHNIQUES / DATOS TÉCNICAS

	i_{ges}	M_2max (n1: 1400rpm) (Nm)
10001	3.56 ... 8.67	5040
10002	13.4 ... 48.9	6790
10003	57.6 ... 330.3	8780
10004	352.0 ... 2229.7	12140

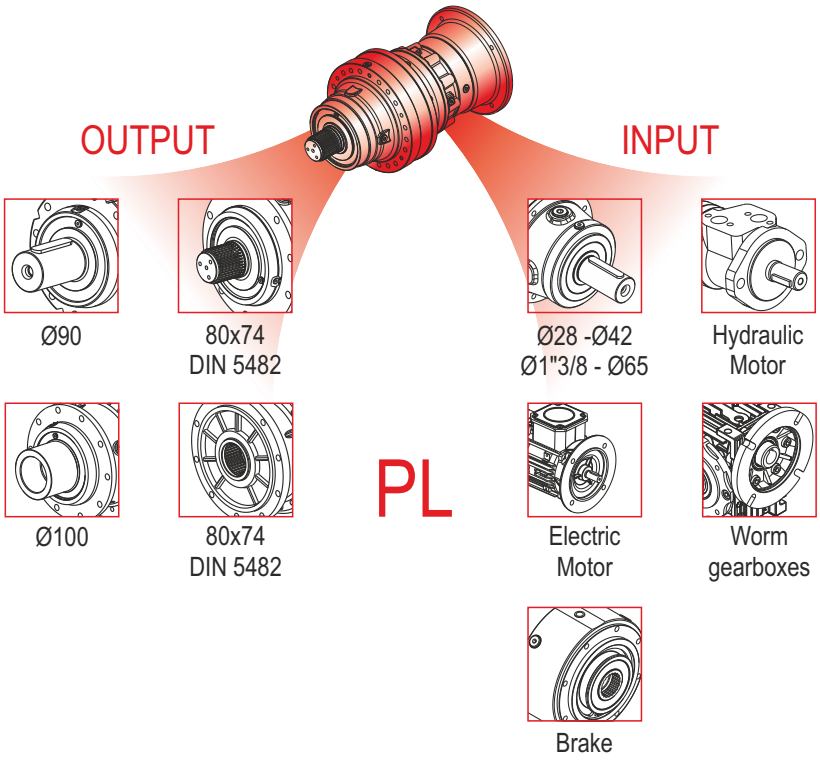

	i_{ges}	M_2max (n1: 1400rpm) (Nm)
10002	12.3 ... 36.7	6290
10003	46.4 ... 266.4	8590
10004	140.1 ... 969.0	10710

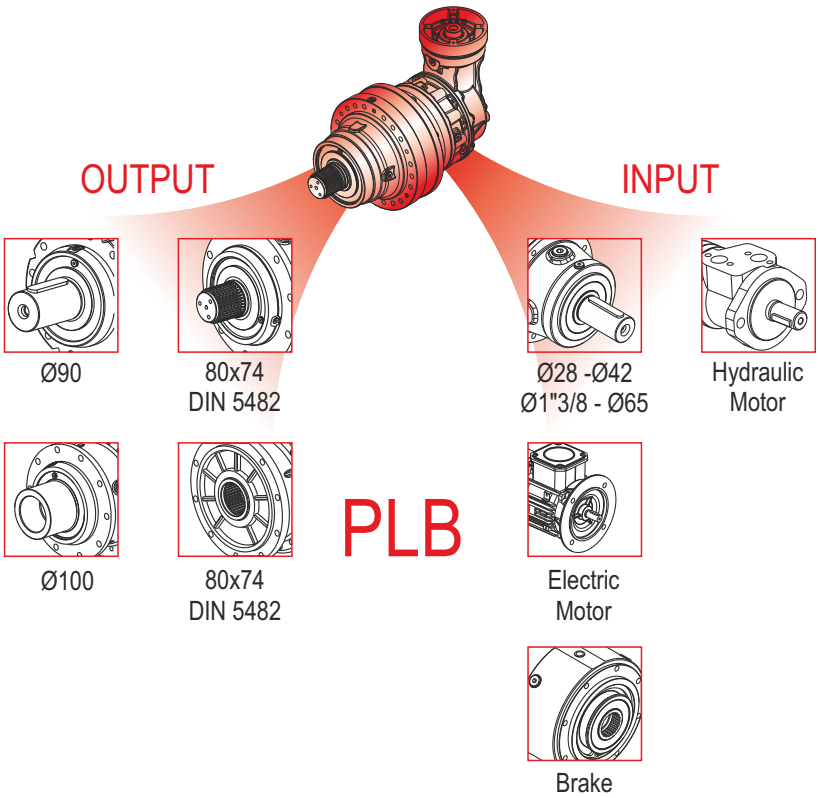

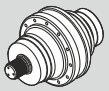	Pt [kW]	n_{1max} [min^{-1}]	i_{ges}	Mc [kNm] n_2 x h 10.000	Mc [kNm] n_2 x h 20.000	Mc [kNm] n_2 x h 50.000	Mc [kNm] n_2 x h 100.000	Giriş- Input - Antrieb - Entrata - Entrée - Entrada: IEC (B5)	Giriş- Input - Antrieb - Entrata - Entrée - Entrada: PMRV / PRV	Giriş- Input - Antrieb - Entrata - Entrée - Entrada: EL - EML EM - EP - ET
PL 10001	40	2000	3.56 4.29 5.60 6.75 8.67	14.08 12.10 9.40 7.18 5.08	12.45 10.71 8.32 6.35 4.50	10.60 9.12 7.08 5.41 3.83	9.38 8.07 6.27 4.78 3.39	160 180 200 225	110 130	EM 65 EM 1"3/8 Z6 EP 65
PL 10002	23	2800	13.4 16.2 18.4 22.1 25.7 28.9 33.6 40.5 48.9	14.08 12.10 14.08 12.10 12.10 9.40 9.40 7.18 7.18	12.45 10.71 12.45 10.71 10.71 8.32 8.32 6.35 6.35	10.60 9.12 10.60 9.12 9.12 7.08 7.08 5.41 5.41	9.38 8.07 9.38 8.07 8.07 6.27 6.27 4.78 4.78	63 71 80 90 100 112 132 160 180	050 063 075 090 110 130	EL C 28 EL C 42 EML 42 EML 1"3/8 Z6 EM 65 EM 1"3/8 Z6 EP 65
PL 10003	15	2800	57.6 62.9 75.2 82.1 94.9 109.3 118.5 124.0 129.4 144.0 155.9 173.6 188.2 195.3 209.7 226.8 235.4 274.1 330.3	14.08 14.08 14.08 14.08 12.10 12.10 9.40 12.10 9.40 12.10 9.40 12.10 9.40 9.40 7.18 9.40 7.18 9.40 7.18	12.45 12.45 12.45 12.45 10.71 10.71 8.32 10.71 8.32 10.71 8.32 10.71 8.32 8.32 6.35 8.32 6.35 8.32 6.35	10.60 10.60 10.60 10.60 9.12 9.12 7.08 9.12 7.08 9.12 7.08 9.12 7.08 7.08 5.41 7.08 5.41 7.08 5.41	9.38 9.38 9.38 9.38 8.07 8.07 6.27 8.07 6.27 8.07 6.27 8.07 6.27 6.27 4.78 6.27 4.78 6.27 4.78	63 71 80 90 100 112 132 160	050 063 075 090	EL C 28 EL C 42 EML 42 EML 1"3/8 Z6
PL 10004	11	2800	352.0 388.6 421.2 440.9 459.9 507.7 531.4 554.4 576.1 612.0 640.5 724.4 806.4 907.3 1008.9 1093.7 1270.1 1530.9 1849.8 2229.7	14.08 14.08 14.08 12.10 14.08 14.08 12.10 14.08 9.40 12.10 12.10 9.40 9.40 9.40 12.10 9.40 9.40 9.40 9.40 7.18	12.45 12.45 12.45 10.71 12.45 12.45 10.71 12.45 8.32 10.71 10.71 8.32 8.32 8.32 10.71 8.32 8.32 8.32 8.32 6.35	10.60 10.60 10.60 9.12 10.60 10.60 9.12 10.60 7.08 9.12 9.12 7.08 7.08 7.08 9.12 7.08 7.08 7.08 7.08 5.41	9.38 9.38 9.38 8.07 9.38 9.38 8.07 9.38 6.27 8.07 8.07 6.27 6.27 6.27 8.07 6.27 6.27 6.27 6.27 4.78	63 71 80 90 100 112 132 160	050 063 075 090	EL C 28 EL C 42 EML 42 EML 1"3/8 Z6

	Pt [kW]	n_{1max} [min^{-1}]	i_{ges}	Mc [kNm]				Giriş- Input - Antrieb - Entrata - Entrée - Entrada	
				n_2 x h	n_2 x h	n_2 x h	n_2 x h		
				10.000	20.000	50.000	100.000	IEC (B5)	EL - EML EM - EP - ET
PLB 10002	23	2800	12.3 14.8 19.3 23.3 30.5 36.7	14.08 12.10 9.40 7.18 9.40 7.18	12.45 10.71 8.32 6.35 8.32 6.35	10.60 9.12 7.08 5.41 7.08 5.41	9.38 8.07 6.27 4.78 6.27 4.78	80 90 100 112 132 160 180	EL C 28 EL C 42 EML 42 EML 1"3/8 Z6 EM 65 EM 1"3/8 Z6 EP 65
PLB 10003	15	2800	46.4 50.7 61.1 73.1 88.8 96.2 116.1 120.6 125.8 140.0 157.5 182.9 221.0 266.4	14.08 14.08 12.10 14.08 12.10 12.10 9.40 12.10 9.40 12.10 9.40 9.40 9.40 7.18	12.45 12.45 10.71 12.45 10.71 10.71 8.32 10.71 8.32 10.71 8.32 8.32 8.32 6.35	10.60 10.60 9.12 10.60 9.12 9.12 7.08 9.12 7.08 9.12 7.08 7.08 7.08 5.41	9.38 9.38 8.07 9.38 8.07 8.07 6.27 8.07 6.27 8.07 6.27 6.27 6.27 4.78	80 90 100 112 132 160	EL C 28 EL C 42 EML 42 EML 1"3/8 Z6 EM 65 EM 1"3/8 Z6 EP 65
PLB 10004	11	2800	140.1 168.9 184.4 203.5 230.9 265.9 278.4 301.8 320.6 350.0 379.5 418.9 457.4 510.4 551.9 665.3 803.9 969.0	14.08 14.08 12.10 12.10 14.08 12.10 12.10 14.08 12.10 12.10 9.40 9.40 9.40 9.40 9.40 9.40 9.40 7.18	12.45 12.45 10.71 10.71 12.45 10.71 10.71 12.45 10.71 10.71 8.32 8.32 8.32 8.32 8.32 8.32 8.32 6.35	10.60 10.60 9.12 9.12 10.60 9.12 9.12 10.60 9.12 9.12 7.08 7.08 7.08 7.08 7.08 7.08 7.08 5.41	9.38 9.38 8.07 8.07 9.38 8.07 8.07 9.38 8.07 8.07 6.27 6.27 6.27 6.27 6.27 6.27 6.27 4.78	80 90 100 112 132 160	EL C 28 EL C 42 EML 42 EML 1"3/8 Z6 EM 65 EM 1"3/8 Z6 EP 65

(n2 x h = 20.000)

$$M_{max} = M_c \times 2$$

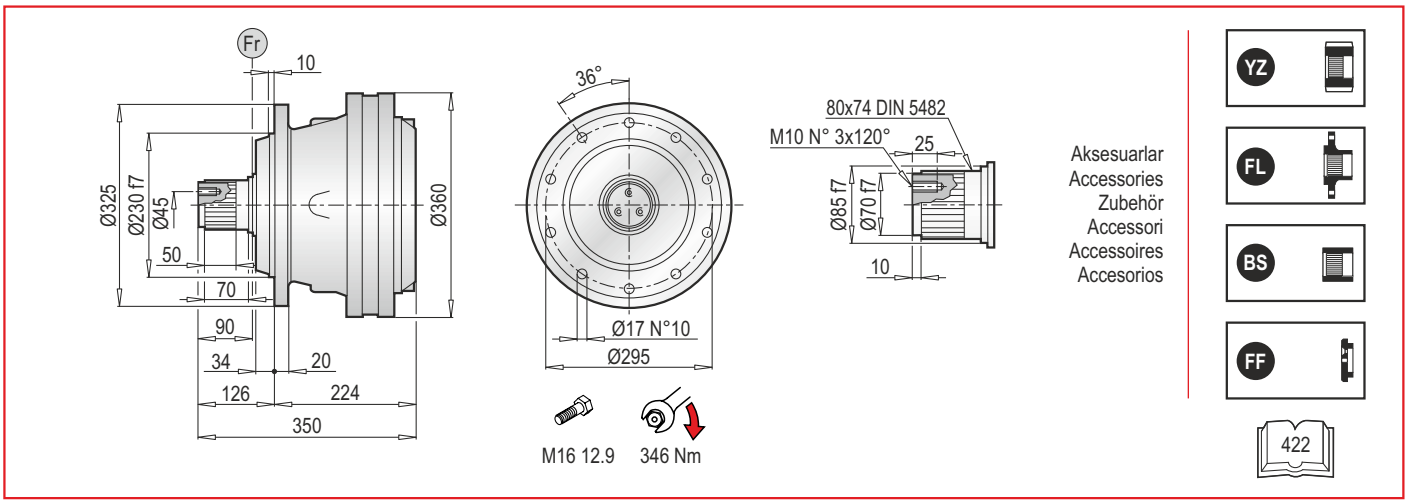

PL 10000 MS - Elektrik Motor Adaptörleri (IEC) / Electric Motor Couplings (IEC) / Anbauvorrichtung Für Elektromotore (IEC) / Predisposizioni Per Motori Elettrici (IEC) / Adaptations Pour Moteurs Electriques (IEC) / Acoplamientos Para Motores Eléctricos (IEC)

PL	IEC 63			IEC 71			IEC 80			IEC 90			IEC 100			IEC 112		
	LT	Z	ØD	LT	Z	ØD	LT	Z	ØD	LT	Z	ØD	LT	Z	ØD	LT	Z	ØD
10001	-			-			-			-			-			-		
10002	331.5			331.5			351.5			351.5			361.5			361.5		
10003	392.5	36	140	392.5	36	160	412.5	56	200	412.5	56	200	422.5	66	250	422.5	66	250
10004	440.5			440.5			460.5			460.5			470.5			470.5		

PL	IEC 132			IEC 160			IEC 180			IEC 200			IEC 225		
	LT	Z	ØD	LT	Z	ØD	LT	Z	ØD	LT	Z	ØD	LT	Z	ØD
10001	-			342	118	350	342	118	350	372	148	400	372	148	450
10002	395.5			434.5			434.5	139	350	-			-		
10003	456.5	100	300	495.5	139	350	-			-			-		
10004	504.5			543.5			-			-			-		

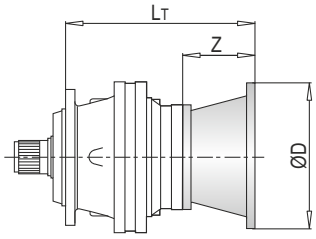

PL	IEC ~ Kg										
	63	71	80	90	100	112	132	160	180	200	225
10001	-	-	-	-	-	-	-	120	120	130	135
10002	120	120	122	122	123	123	127	137	137	-	-
10003	128	128	140	140	141	141	145	155	-	-	-
10004	134	134	146	146	147	147	151	161	-	-	-

PL 10000 MS - Giriş Milleri / Input Shafts / Antriebswellen / Alberi Entrata / Arbres D'entree / Ejes De Entrada

PL	EL C 28				EL C 42				EML 42				EML 1"3/8 Z6				EM 65				EM 1"3/8 Z6			
	LT	Z	L	Ød	LT	Z	L	Ød	LT	Z	L	Ød	LT	Z	L	Ød	LT	Z	L	Ød	LT	Z	L	Ød
10001	-				-				-				-				345.5	121.5	105	65	345.5	121.5	105	1"3/8
10002	359.5				359.5				389.5				389.5				430.5				430.5			
10003	420.5	64	50	28	420.5	64	82	42	450.5	94	82	42	450.5	94	106	1"3/8	-				-			
10004	468.5				468.5				498.5				498.5				-				-			

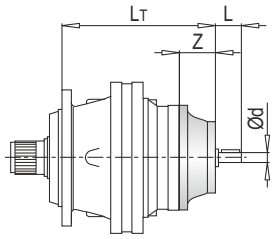

PL	EP 65			
	LT	Z	L	Ød
10001	377	153	105	65
10002	462			
10003	-			
10004	-			

PL	~ Kg						
	EL C 28	EL C 42	EML 42	EML 1"3/8 Z6	EM 65	EM 1"3/8 Z6	EP 65
10001	-	-	-	-	115	115	124
10002	120.5	121	124	124	132	132	141
10003	128.5	129	132	132	-	-	-
10004	134.5	135	138	138	-	-	-

PL 10000 MS - Sonsuz Dişlili Redüktör Adaptörleri (PMRV/PRV) / Worm Gearbox Adaptors (PMRV/PRV) / Anschluss Für Schneckengetriebe (PMRV/PRV) / Predisposizioni Per Riduttori A Vite Senza Fine (PMRV/PRV) / Adaptation Pour Reducteurs A Vis Sans Fin (PMRV/PRV) / Acoplamiento Para Reductores De Tornillo Sin Fin (PMRV/PRV)

PL	PMRV/PRV 050					PMRV/PRV 063					PMRV/PRV 075				
	LM	l	h	MA	G	LM	l	h	MA	G	LM	l	h	MA	G
10001	-					-					-				
10002	421	50	110	60	80	430.5	63	135	72	95	409.5	75	161	86	112.5
10003	482					491.5					470.5				
10004	530					539.5					518.5				

PL	PMRV/PRV 090					PMRV/PRV 110					PMRV/PRV 130				
	LM	l	h	MA	G	LM	l	h	MA	G	LM	l	h	MA	G
10001	-					362	110	237.5	127.5	160	369.5	130	277.5	147.5	180
10002	419.5	90	193	103	129.5	447					454.5				
10003	480.5					-					-				
10004	528.5					-					-				

PL	PMRV/PRV ~ Kg					
	050	063	075	090	110	130
10001	-	-	-	-	144	161
10002	123	126.5	129	134	161	178
10003	131	134.5	137	142	-	-
10004	137	140.5	143	148	-	-

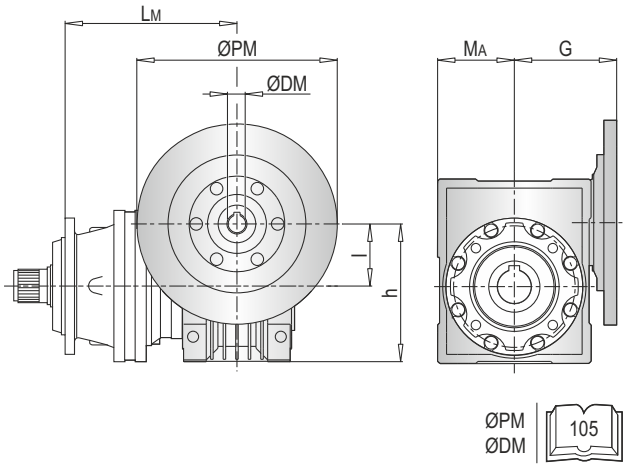

PLB 10000 MS - Elektrik Motor Adaptörleri (IEC) / Electric Motor Couplings (IEC) / Anbauvorrichtung Für Elektromotore (IEC) / Predisposizioni Per Motori Elettrici (IEC) / Adaptations Pour Moteurs Electriques (IEC) / Acoplamientos Para Motores Eléctricos (IEC)

PLB	IEC 80				IEC 90				IEC 100				IEC 112				IEC 132			
	A	LT	Z	ØD	A	LT	Z	ØD	A	LT	Z	ØD	A	LT	Z	ØD	A	LT	Z	ØD
10002	312	296	56	200	312	296	56	200	312	306	66	250	312	306	66	250	312	340	100	300
10003	397				397				397				397				397			
10004	431.5	216			431.5	216			431.5	226			431.5	226			431.5	260		

PLB	IEC 160				IEC 180			
	A	LT	Z	ØD	A	LT	Z	ØD
10002	312	379	139	350	312	379	139	350
10003	397				-			
10004	431.5	299			-			

PLB	IEC ~ Kg						
	80	90	100	112	132	160	180
10002	122	122	123	123	127	137	137
10003	130	130	131	131	135	145	-
10004	136	136	137	137	141	151	-

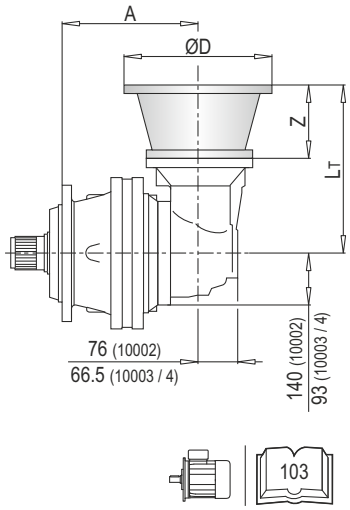

PLB 10000 MS - Giriş Milleri / Input Shafts / Antriebswellen / Alberi Entrata / Arbres D'entree / Ejes De Entrada

PLB	EL C 28					EL C 42					EML 42					EML 1"3/8 Z6					EM 65				
	A	LT	Z	L	Ød	A	LT	Z	L	Ød	A	LT	Z	L	Ød	A	LT	Z	L	Ød	A	LT	Z	L	Ød
10002	312	304	64	50	28	312	304	64	82	42	312	334	94	82	42	312	334	94	106	1"3/8	312	377.5	121.5	105	65
10003	397					397					397					397					397				
10004	431.5	224				431.5	224				431.5	254				431.5	254				431.5	297.5			

PLB	EM 1"3/8 Z6					EP 65				
	A	LT	Z	L	Ød	A	LT	Z	L	Ød
10002	312	377.5	121.5	105	1"3/8	312	409	153	105	65
10003	397					397				
10004	431.5	297.5				431.5	329			

PLB	~ Kg						
	EL C 28	EL C 42	EML 42	EML 1"3/8 Z6	EM 65	EM 1"3/8 Z6	EP 65
10002	120.5	121.0	124.0	124.0	132.0	132.0	141.0
10003	128.5	129.0	132.0	132.0	140.0	140.0	149.0
10004	134.5	135.0	138.0	138.0	146.0	146.0	155.0

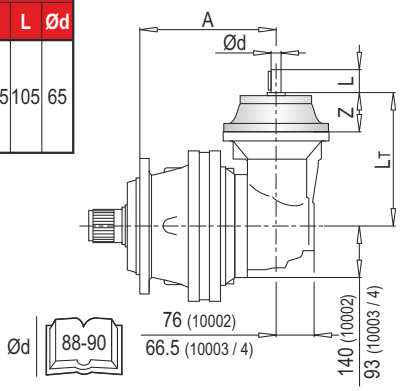

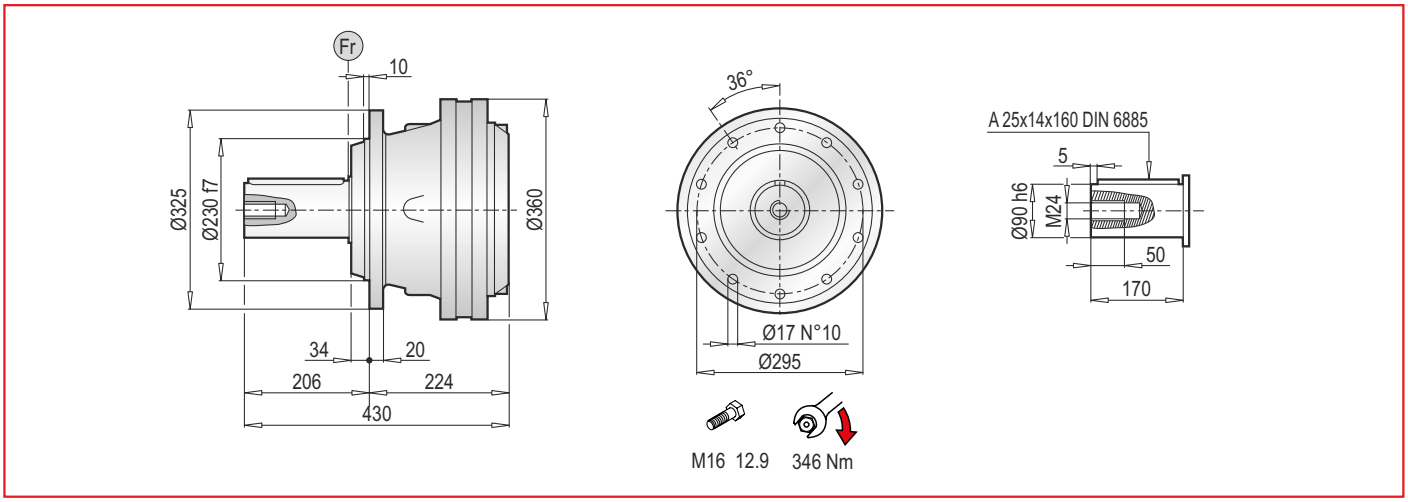

PL 10000 MC - Elektrik Motor Adaptörleri (IEC) / Electrıc Motor Couplings (IEC) / Anbauvorrichtung Für Elektromotore (IEC) / Predisposizioni Per Motori Elettrici (IEC) / Adaptations Pour Moteurs Electriques (IEC) / Acoplamientos Para Motores Eléctricos (IEC)

PL	IEC 63			IEC 71			IEC 80			IEC 90			IEC 100			IEC 112		
	LT	Z	ØD	LT	Z	ØD	LT	Z	ØD	LT	Z	ØD	LT	Z	ØD	LT	Z	ØD
10001	-			-			-			-			-			-		
10002	331.5			331.5			351.5			351.5			361.5			361.5		
10003	392.5	36	140	392.5	36	160	412.5	56	200	412.5	56	200	422.5	66	250	422.5	66	250
10004	440.5			440.5			460.5			460.5			470.5			470.5		

PL	IEC 132			IEC 160			IEC 180			IEC 200			IEC 225		
	LT	Z	ØD	LT	Z	ØD	LT	Z	ØD	LT	Z	ØD	LT	Z	ØD
10001	-			342	118	350	342	118	350	372	148	400	372	148	450
10002	395.5			434.5			434.5	139	350	-			-		
10003	456.5	100	300	495.5	139	350	-			-			-		
10004	504.5			543.5			-			-			-		

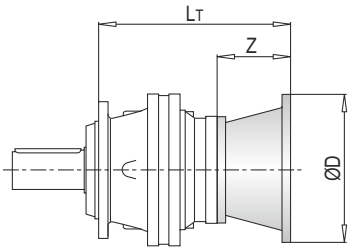

PL	IEC ~ Kg										
	63	71	80	90	100	112	132	160	180	200	225
10001	-	-	-	-	-	-	-	120	120	130	135
10002	120	120	122	122	123	123	127	137	137	-	-
10003	128	128	140	140	141	141	145	155	-	-	-
10004	134	134	146	146	147	147	151	161	-	-	-

PL 10000 MC - Giriş Milleri / Input Shafts / Antriebswellen / Alberi Entrata / Arbres D'entree / Ejes De Entrada

PL	EL C 28				EL C 42				EML 42				EML 1"3/8 Z6				EM 65				EM 1"3/8 Z6			
	LT	Z	L	Ød	LT	Z	L	Ød	LT	Z	L	Ød	LT	Z	L	Ød	LT	Z	L	Ød	LT	Z	L	Ød
10001	-				-				-				-				345.5	121.5	105	65	345.5	121.5	105	1"3/8
10002	359.5				359.5				389.5				389.5				430.5				430.5			
10003	420.5	64	50	28	420.5	64	82	42	450.5	94	82	42	450.5	94	106	1"3/8	-				-			
10004	468.5				468.5				498.5				498.5				-				-			

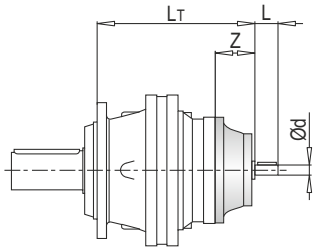

PL	EP 65			
	LT	Z	L	Ød
10001	377	153	105	65
10002	462			
10003	-			
10004	-			

PL	~ Kg						
	EL C 28	EL C 42	EML 42	EML 1"3/8 Z6	EM 65	EM 1"3/8 Z6	EP 65
10001	-	-	-	-	115.0	115.0	124.0
10002	120.5	121.0	124.0	124.0	132.0	132.0	141.0
10003	128.5	129.0	132.0	132.0	-	-	-
10004	134.5	135.0	138.0	138.0	-	-	-

PL 10000 MC - Sonsuz Dişlili Redüktör Adaptörleri (PMRV/PRV) / Worm Gearbox Adaptors (PMRV/PRV) / Anschluss Für Schneckengetriebe (PMRV/PRV) / Predisposizioni Per Riduttori A Vite Senza Fine (PMRV/PRV) / Adaptation Pour Reducteurs A Vis Sans Fin (PMRV/PRV) / Acoplamiento Para Reductores De Tornillo Sin Fin (PMRV/PRV)

PL	PMRV/PRV 050					PMRV/PRV 063					PMRV/PRV 075				
	LM	l	h	MA	G	LM	l	h	MA	G	LM	l	h	MA	G
10001	-					-					-				
10002	421	50	110	60	80	430.5	63	135	72	95	409.5	75	161	86	112.5
10003	482					491.5					470.5				
10004	530					539.5					518.5				

PL	PMRV/PRV 090					PMRV/PRV 110					PMRV/PRV 130				
	LM	l	h	MA	G	LM	l	h	MA	G	LM	l	h	MA	G
10001	-					362	110	237.5	127.5	160	369.5	130	277.5	147.5	180
10002	419.5	90	193	103	129.5	447					454.5				
10003	480.5					-					-				
10004	528.5					-					-				

PL	PMRV/PRV~ Kg					
	050	063	075	090	110	130
10001	-	-	-	-	144	161
10002	123	126.5	129	134	161	178
10003	131	134.5	137	142	-	-
10004	137	140.5	143	148	-	-

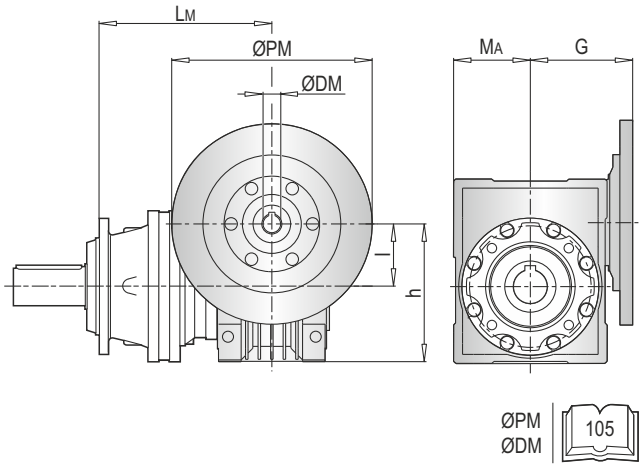

PLB 10000 MC - Elektrik Motor Adaptörleri (IEC) / Electric Motor Couplings (IEC) / Anbauvorrichtung Für Elektromotore (IEC) / Predisposizioni Per Motori Elettrici (IEC) / Adaptations Pour Moteurs Electriques (IEC) / Acoplamientos Para Motores Eléctricos (IEC)

PLB	IEC 80				IEC 90				IEC 100				IEC 112				IEC 132			
	A	LT	Z	ØD	A	LT	Z	ØD	A	LT	Z	ØD	A	LT	Z	ØD	A	LT	Z	ØD
10002	312	296	56	200	312	296	56	200	312	306	66	250	312	306	66	250	312	340	100	300
10003	397				397				397				397				397			
10004	431.5	216			431.5	216			431.5	226			431.5	226			431.5	260		

PLB	IEC 160				IEC 180			
	A	LT	Z	ØD	A	LT	Z	ØD
10002	312	379	139	350	312	379	139	350
10003	397				-			
10004	431.5	299			-			

PLB	IEC ~ Kg						
	80	90	100	112	132	160	180
10002	122	122	123	123	127	137	137
10003	130	130	131	131	135	145	-
10004	136	136	137	137	141	151	-

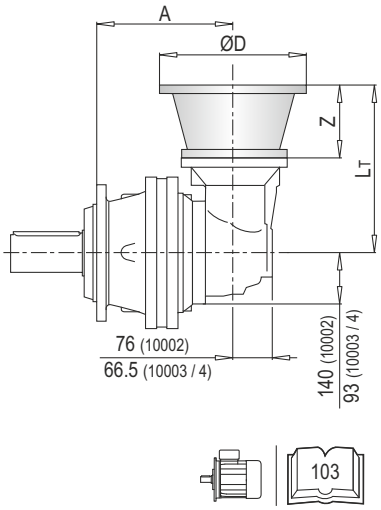

PLB 10000 MC - Giriş Milleri / Input Shafts / Antriebswellen / Alberi Entrata / Arbres D'entree / Ejes De Entrada

PLB	EL C 28					EL C 42					EML 42					EML 1"3/8 Z6					EM 65				
	A	LT	Z	L	Ød	A	LT	Z	L	Ød	A	LT	Z	L	Ød	A	LT	Z	L	Ød	A	LT	Z	L	Ød
10002	312	304	64	50	28	312	304	64	82	42	312	334	94	82	42	312	334	94	106	1"3/8	312	377.5	121.5	105	65
10003	397					397					397					397					397				
10004	431.5	224				431.5	224				431.5	254				431.5	254				431.5	297.5			

PLB	EM 1"3/8 Z6					EP 65				
	A	LT	Z	L	Ød	A	LT	Z	L	Ød
10002	312	377.5	121.5	105	1"3/8	312	409	153	105	65
10003	397					397				
10004	431.5	297.5				431.5	329			

PLB	~ Kg						
	EL C 28	EL C 42	EML 42	EML 1"3/8 Z6	EM 65	EM 1"3/8 Z6	EP 65
10002	120.5	121.0	124.0	124.0	132.0	132.0	141.0
10003	128.5	129.0	132.0	132.0	140.0	140.0	149.0
10004	134.5	135.0	138.0	138.0	146.0	146.0	155.0

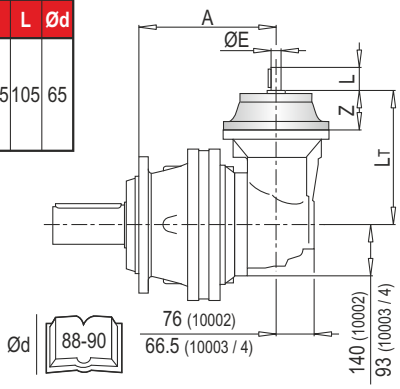

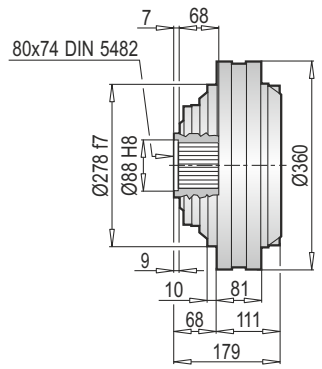

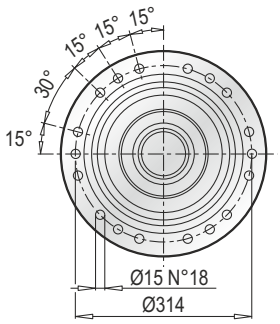

M14 12.9 235 Nm

Aksesuarlar
Accessories
Zubehör
Accessori
Accessoires
Accesorios

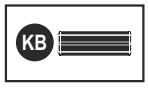

PL 10000 F - Elektrik Motor Adaptörleri (IEC) / Electrıc Motor Couplings (IEC) / Anbauvorrichtung Für Elektromotore (IEC) / Predisposizioni Per Motori Elettrici (IEC) / Adaptations Pour Moteurs Electriques (IEC) / Acoplamientos Para Motores Eléctricos (IEC)

PL	IEC 63			IEC 71			IEC 80			IEC 90			IEC 100			IEC 112		
	LT	Z	ØD	LT	Z	ØD	LT	Z	ØD	LT	Z	ØD	LT	Z	ØD	LT	Z	ØD
10001	-			-			-			-			-			-		
10002	218.5			218.5			238.5			238.5			248.5			248.5		
10003	279.5	36	140	279.5	36	160	299.5	56	200	299.5	56	200	309.5	66	250	309.5	66	250
10004	327.5			327.5			347.5			347.5			357.5			357.5		

PL	IEC 132			IEC 160			IEC 180			IEC 200			IEC 225		
	LT	Z	ØD	LT	Z	ØD	LT	Z	ØD	LT	Z	ØD	LT	Z	ØD
10001	-			229	118	350	229	118	350	259	148	400	259	148	450
10002	282.5			321.5			321.5	139	350	-			-		
10003	343.5	100	300	382.5	139	350	-			-			-		
10004	391.5			430.5			-			-			-		

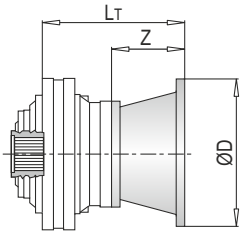

PL	IEC ~ Kg										
	63	71	80	90	100	112	132	160	180	200	225
10001	-	-	-	-	-	-	-	88	88	98	103
10002	87	87	89	89	90	90	94	104	104	-	-
10003	95	95	97	97	98	98	102	112	-	-	-
10004	101	101	103	103	104	104	108	118	-	-	-

PL 10000 F - Giriş Milleri / Input Shafts / Antriebswellen / Alberi Entrata / Arbres D'entree / Ejes De Entrada

PL	EL C 28				EL C 42				EML 42				EML 1"3/8 Z6				EM 65				EM 1"3/8 Z6			
	LT	Z	L	Ød	LT	Z	L	Ød	LT	Z	L	Ød	LT	Z	L	Ød	LT	Z	L	Ød	LT	Z	L	Ød
10001	-				-				-				-				232.5	121.5	105	65	232.5	121.5	105	1"3/8
10002	246.5				246.5				276.5				276.5				317.5				317.5			
10003	307.5	64	50	28	307.5	64	82	42	337.5	94	82	42	337.5	94	106	1"3/8	-				-			
10004	355.5				355.5				385.5				385.5				-				-			

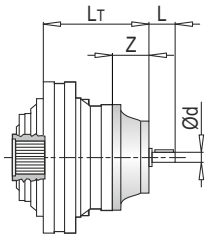

PL	EP 65			
	LT	Z	L	Ød
10001	264	153	105	65
10002	349			
10003	-			
10004	-			

PL	~ Kg						
	EL C 28	EL C 42	EML 42	EML 1"3/8 Z6	EM 65	EM 1"3/8 Z6	EP 65
10001	-	-	-	-	83.0	83.0	92.0
10002	87.5	88.0	91.0	91.0	99.0	99.0	108.0
10003	95.5	96.0	99.0	99.0	-	-	-
10004	101.5	102.0	105.0	105.0	-	-	-

PL 10000 F - Sonsuz Dişlili Redüktör Adaptörleri (PMRV/PRV) / Worm Gearbox Adaptors (PMRV/PRV) / Anschluss Für Schneckengetriebe (PMRV/PRV) / Predisposizioni Per Riduttori A Vite Senza Fine (PMRV/PRV) / Adaptation Pour Reducteurs A Vis Sans Fin (PMRV/PRV) / Acoplamiento Para Reductores De Tornillo Sin Fin (PMRV/PRV)

PL	PMRV/PRV 050					PMRV/PRV 063					PMRV/PRV 075				
	LM	l	h	MA	G	LM	l	h	MA	G	LM	l	h	MA	G
10001	-					-					-				
10002	308	50	110	60	80	317.5	63	135	72	95	296.5	75	161	86	112.5
10003	369					378.5					357.5				
10004	417					426.5					405.5				

PL	PMRV/PRV 090					PMRV/PRV 110					PMRV/PRV 130				
	LM	l	h	MA	G	LM	l	h	MA	G	LM	l	h	MA	G
10001	-					249	110	237.5	127.5	160	256.5	130	277.5	147.5	180
10002	306.5	90	193	103	129.5	334					341.5				
10003	367.5					-					-				
10004	415.5					-					-				

PL	PMRV/PRV ~ Kg					
	050	063	075	090	110	130
10001	-	-	-	-	112	129
10002	90	93.5	96	101	128	145
10003	98	101.5	104	109	-	-
10004	104	107.5	110	115	-	-

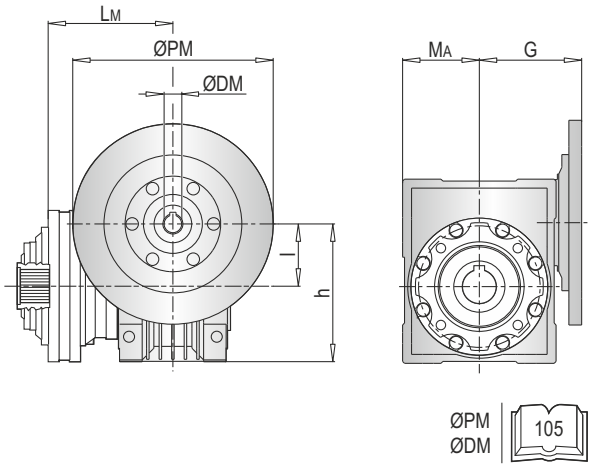

PLB 10000 F - Elektrik Motor Adaptörleri (IEC) / Electric Motor Couplings (IEC) /Anbauvorrichtung Für Elektromotore (IEC) / Predisposizioni Per Motori Elettrici (IEC) / Adaptations Pour Moteurs Electriques (IEC) /Acoplamientos Para Motores Eléctricos (IEC)

PLB	IEC 80				IEC 90				IEC 100				IEC 112				IEC 132			
	A	LT	Z	ØD	A	LT	Z	ØD	A	LT	Z	ØD	A	LT	Z	ØD	A	LT	Z	ØD
10002	199	296	56	200	199	296	56	200	199	306	66	250	199	306	66	250	199	340	100	300
10003	284				284				284				284				284			
10004	318.5	216			318.5	216			318.5	226			318.5	226			318.5	260		

PLB	IEC 160				IEC 180			
	A	LT	Z	ØD	A	LT	Z	ØD
10002	199	379	139	350	199	379	139	350
10003	284				-			
10004	318.5	299			-			

PLB	IEC ~ Kg						
	80	90	100	112	132	160	180
10002	111	111	112	112	116	126	126
10003	130	130	131	131	135	145	-
10004	113	113	114	114	118	128	-

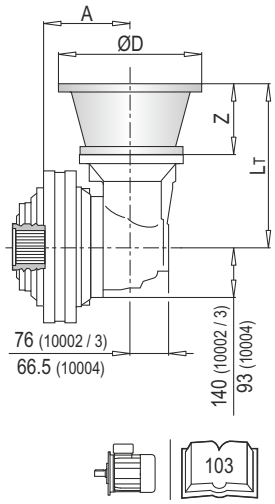

PLB 10000 F - Giriş Milleri / Input Shafts / Antriebswellen / Alberi Entrata / Arbres D'entree / Ejes De Entrada

PLB	EL C 28					EL C 42					EML 42					EML 1"3/8 Z6					EM 65				
	A	LT	Z	L	Ød	A	LT	Z	L	Ød	A	LT	Z	L	Ød	A	LT	Z	L	Ød	A	LT	Z	L	Ød
10002	199	304	64	50	28	199	304	64	82	42	199	334	94	82	42	199	334	94	106	1"3/8	199	377.5	121.5	105	65
10003	284					284					284					284					284				
10004	318.5	224				318.5	224				318.5	254				318.5	254				318.5	297.5			

PLB	EM 1"3/8 Z6					EP 65				
	A	LT	Z	L	Ød	A	LT	Z	L	Ød
10002	199	377.5	121.5	105	1"3/8	199	409	153	105	65
10003	284					284				
10004	318.5	297.5				318.5	329			

PLB	~ Kg						
	EL C 28	EL C 42	EML 42	EML 1"3/8 Z6	EM 65	EM 1"3/8 Z6	EP 65
10002	109.5	110.0	113.0	113.0	121.0	121.0	130.0
10003	128.5	129.0	132.0	132.0	140.0	140.0	149.0
10004	111.5	112.0	115.0	115.0	123.0	123.0	132.0

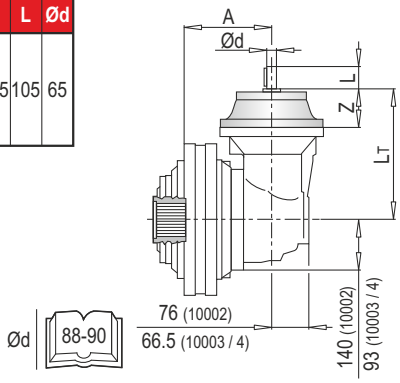

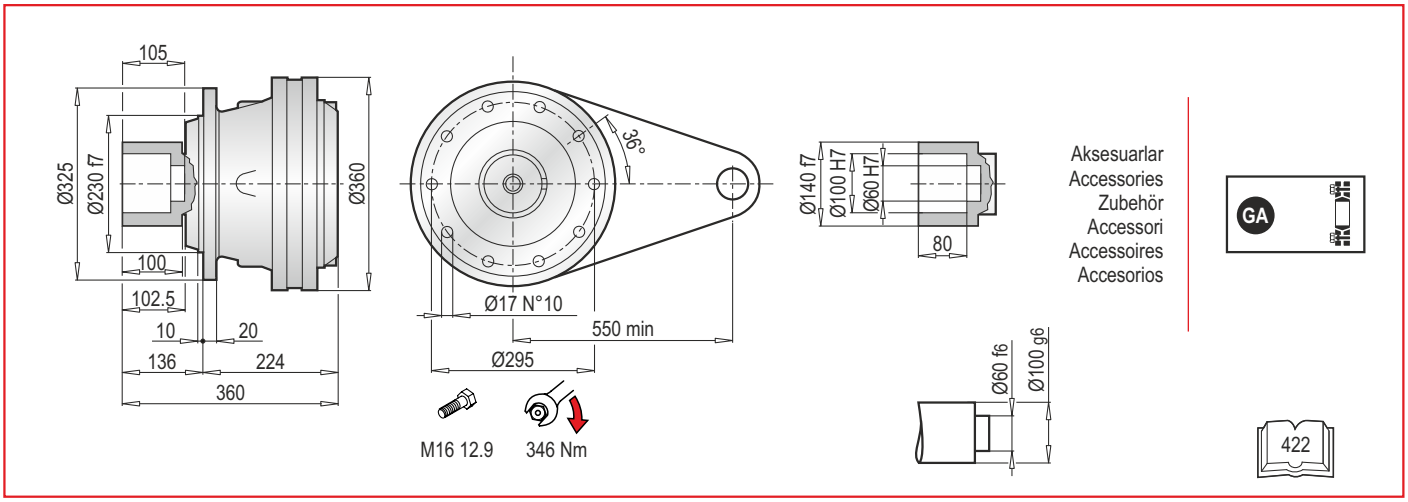

PL 10000 FS - Elektrik Motor Adaptörleri (IEC) / Electrıc Motor Couplings (IEC) /Anbauvorrichtung Für Elektromotore (IEC) / Predisposizioni Per Motori Elettrici (IEC) / Adaptations Pour Moteurs Electriques (IEC) /Acoplamientos Para Motores Eléctricos (IEC)

PL	IEC 63			IEC 71			IEC 80			IEC 90			IEC 100			IEC 112		
	LT	Z	ØD	LT	Z	ØD	LT	Z	ØD	LT	Z	ØD	LT	Z	ØD	LT	Z	ØD
10001	-			-			-			-			-			-		
10002	331.5			331.5			351.5			351.5			361.5			361.5		
10003	392.5	36	140	392.5	36	160	412.5	56	200	412.5	56	200	422.5	66	250	422.5	66	250
10004	440.5			440.5			460.5			460.5			470.5			470.5		

PL	IEC 132			IEC 160			IEC 180			IEC 200			IEC 225		
	LT	Z	ØD	LT	Z	ØD	LT	Z	ØD	LT	Z	ØD	LT	Z	ØD
10001	-			342	118	350	342	118	350	372	148	400	372	148	450
10002	395.5			434.5			434.5	139	350	-			-		
10003	456.5	100	300	495.5	139	350	-			-			-		
10004	504.5			543.5			-			-			-		

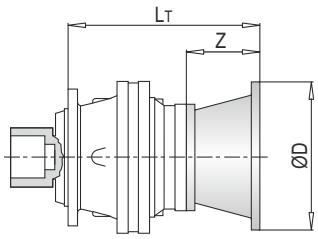

PL	IEC ~ Kg										
	63	71	80	90	100	112	132	160	180	200	225
10001	-	-	-	-	-	-	-	126	126	136	141
10002	125	125	127	127	128	128	132	142	142	-	-
10003	133	133	135	135	136	136	140	150	-	-	-
10004	139	139	141	141	142	142	146	156	-	-	-

PL 10000 FS - Giriş Milleri / Input Shafts / Antriebswellen / Alberi Entrata / Arbres D'entree / Ejes De Entrada

PL	EL C 28				EL C 42				EML 42				EML 1"3/8 Z6				EM 65				EM 1"3/8 Z6			
	LT	Z	L	Ød	LT	Z	L	Ød	LT	Z	L	Ød	LT	Z	L	Ød	LT	Z	L	Ød	LT	Z	L	Ød
10001	-				-				-				-				345.5	121.5	105	65	345.5	121.5	105	1"3/8
10002	359.5				359.5				389.5				389.5				430.5				430.5			
10003	420.5	64	50	28	420.5	64	82	42	450.5	94	82	42	405.5	94	106	1"3/8	-				-			
10004	468.5				468.5				498.5				498.5				-				-			

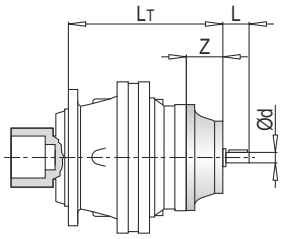

PL	EP 65			
	LT	Z	L	Ød
10001	377	153	105	65
10002	462			
10003	-			
10004	-			

PL	~ Kg						
	EL C 28	EL C 42	EML 42	EML 1"3/8 Z6	EM 65	EM 1"3/8 Z6	EP 65
10001	-	-	-	-	121.0	121.0	130.0
10002	125.5	126.0	129.0	129.0	137.0	137.0	146.0
10003	133.5	134.0	137.0	137.0	145.0	145.0	154.0
10004	139.5	140.0	143.0	143.0	151.0	151.0	160.0

PL 10000 FS - Sonsuz Dişlili Redüktör Adaptörleri (PMRV/PRV) / Worm Gearbox Adaptors (PMRV/PRV) / Anschluss Für Schneckengetriebe (PMRV/PRV) / Predisposizioni Per Riduttori A Vite Senza Fine (PMRV/PRV) / Adaptation Pour Reducteurs A Vis Sans Fin (PMRV/PRV) / Acoplamiento Para Reductores De Tornillo Sin Fin (PMRV/PRV)

PL	PMRV/PRV 050					PMRV/PRV 063					PMRV/PRV 075				
	LM	l	h	MA	G	LM	l	h	MA	G	LM	l	h	MA	G
10001	-					-					-				
10002	421	50	110	60	80	430.5	63	135	72	95	409.5	75	161	86	112.5
10003	482					491.5					470.5				
10004	530					539.5					518.5				

PL	PMRV/PRV 090					PMRV/PRV 110					PMRV/PRV 130				
	LM	l	h	MA	G	LM	l	h	MA	G	LM	l	h	MA	G
10001	-					362	110	237.5	127.5	160	369.5	130	277.5	147.5	180
10002	419.5	90	193	103	129.5	447					454.5				
10003	480.5					-					-				
10004	528.5					-					-				

PL	PMRV/PRV ~ Kg					
	050	063	075	090	110	130
10001	-	-	-	-	150	167
10002	128	131.5	134	139	166	183
10003	136	139.5	142	147	-	-
10004	142	145.5	148	153	-	-

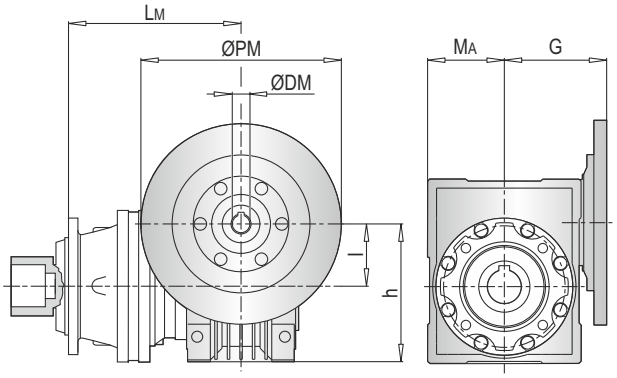

ØPM
ØDM
105

PLB 10000 FS - Elektrik Motor Adaptörleri (IEC) / Electric Motor Couplings (IEC) / Anbauvorrichtung Für Elektromotore (IEC) / Predisposizioni Per Motori Elettrici (IEC) / Adaptations Pour Moteurs Electriques (IEC) / Acoplamientos Para Motores Eléctricos (IEC)

PLB	IEC 80				IEC 90				IEC 100				IEC 112				IEC 132			
	A	LT	Z	ØD	A	LT	Z	ØD	A	LT	Z	ØD	A	LT	Z	ØD	A	LT	Z	ØD
10002	312	296	56	200	312	296	56	200	312	306	66	250	312	306	66	250	312	340	100	300
10003	397				397				397				397				397			
10004	431.5	216			431.5	216			431.5	226			431.5	226			431.5	260		

PLB	IEC 160				IEC 180			
	A	LT	Z	ØD	A	LT	Z	ØD
10002	312	379	139	350	312	379	139	350
10003	397				-			
10004	431.5	299			-			

PLB	IEC ~ Kg						
	80	90	100	112	132	160	180
10002	148	148	149	149	153	163	163
10003	167	167	168	168	172	182	-
10004	150	150	151	151	155	165	-

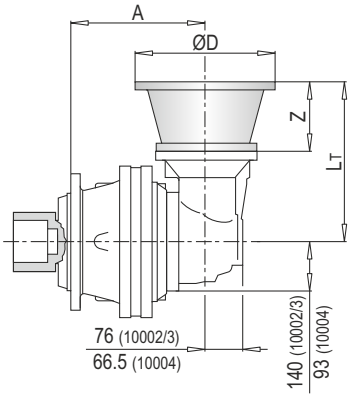

103

PLB 10000 FS - Giriş Milleri / Input Shafts / Antriebswellen / Alberi Entrata / Arbres D'entree / Ejes De Entrada

PLB	EL C 28					EL C 42					EML 42					EML 1"3/8 Z6					EM 65				
	A	LT	Z	L	Ød	A	LT	Z	L	Ød	A	LT	Z	L	Ød	A	LT	Z	L	Ød	A	LT	Z	L	Ød
10002	312	304	64	50	28	312	304	64	82	42	312	334	94	82	42	312	334	94	106	1"3/8	312	377.5	121.5	105	65
10003	397					397					397					397					397				
10004	431.5	224				431.5	224				431.5	254				431.5	254				431.5	297.5			

PLB	EM 1"3/8 Z6					EP 65				
	A	LT	Z	L	Ød	A	LT	Z	L	Ød
10002	312	377.5	121.5	105	1"3/8	312	409	153	105	65
10003	397					397				
10004	431.5	297.5				431.5	329			

PLB	~ Kg						
	EL C 28	EL C 42	EML 42	EML 1"3/8 Z6	EM 65	EM 1"3/8 Z6	EP 65
10002	146.5	147.0	150.0	150.0	158.0	158.0	167.0
10003	165.5	166.0	169.0	169.0	177.0	177.0	186.0
10004	148.5	149.0	152.0	152.0	160.0	160.0	169.0

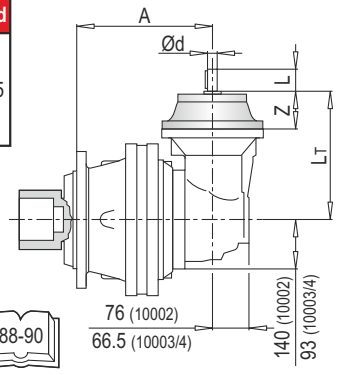

Ød
88-90

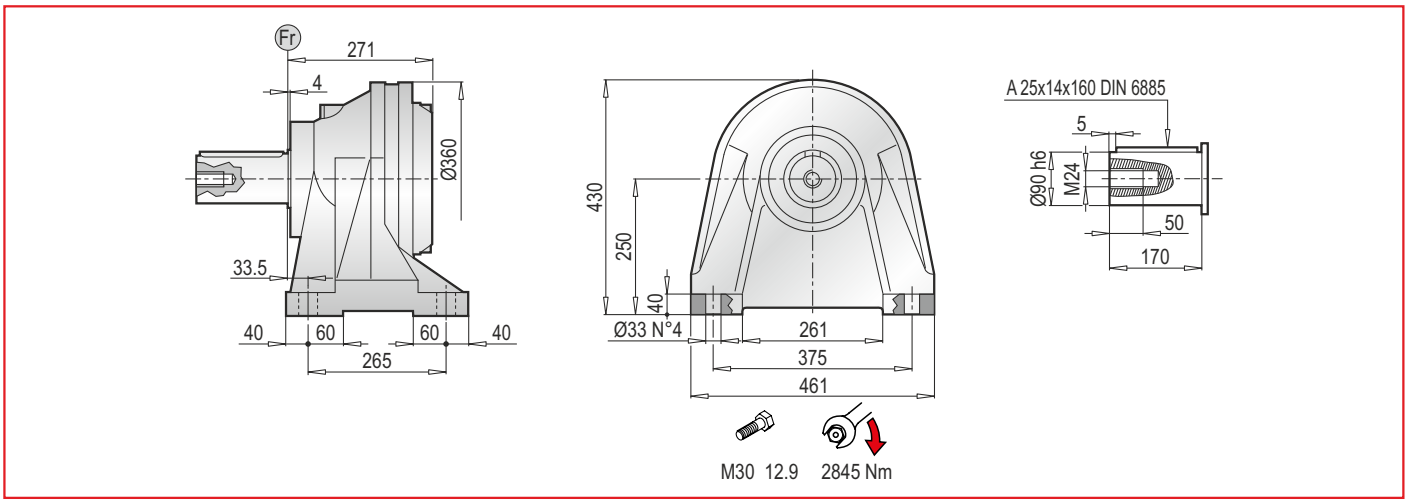

PL 10000 CPC - Elektrik Motor Adaptörleri (IEC) / Electrıc Motor Couplings (IEC) / Anbauvorrichtung Für Elektromotore (IEC) / Predisposizioni Per Motori Elettrici (IEC) / Adaptations Pour Moteurs Electriques (IEC) / Acoplamientos Para Motores Eléctricos (IEC)

PL	IEC 63			IEC 71			IEC 80			IEC 90			IEC 100			IEC 112		
	LT	Z	ØD	LT	Z	ØD	LT	Z	ØD	LT	Z	ØD	LT	Z	ØD	LT	Z	ØD
10001	-			-			-			-			-			-		
10002	378.5			378.5			398.5			398.5			408.5			408.5		
10003	439.5	36	140	439.5	36	160	459.5	56	200	459.5	56	200	469.5	66	250	469.5	66	250
10004	487.5			487.5			507.5			507.5			517.5			517.5		

PL	IEC 132			IEC 160			IEC 180			IEC 200			IEC 225		
	LT	Z	ØD	LT	Z	ØD	LT	Z	ØD	LT	Z	ØD	LT	Z	ØD
10001	-			389	118	350	389	118	350	419	148	400	419	148	450
10002	442.5			481.5			481.5	139	350	-			-		
10003	503.5	100	300	542.5	139	350	-			-			-		
10004	551.5			590.5			-			-			-		

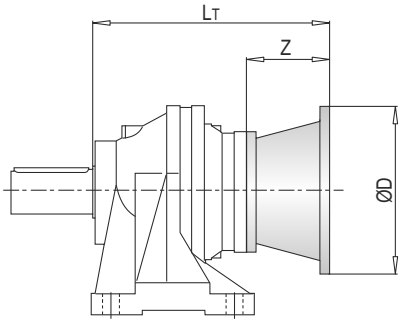

PL	IEC ~ Kg										
	63	71	80	90	100	112	132	160	180	200	225
10001	-	-	-	-	-	-	-	171	171	181	186
10002	170	170	172	172	173	173	177	187	187	-	-
10003	178	178	180	180	181	181	185	195	-	-	-
10004	184	184	186	186	187	187	191	201	-	-	-

PL 10000 CPC - Giriş Milleri / Input Shafts / Antriebswellen / Alberi Entrata / Arbres D'entree / Ejes De Entrada

PL	EL C 28				EL C 42				EML 42				EML 1"3/8 Z6				EM 65				EM 1"3/8 Z6			
	LT	Z	L	Ød	LT	Z	L	Ød	LT	Z	L	Ød	LT	Z	L	Ød	LT	Z	L	Ød	LT	Z	L	Ød
10001	-				-				-				-				392.5	121.5	105	65	392.5	121.5	105	1"3/8
10002	406.5				406.5				436.5				436.5				477.5				477.5			
10003	467.5	64	50	28	467.5	64	82	42	497.5	94	82	42	497.5	94	106	1"3/8	-				-			
10004	515.5				515.5				545.5				545.5				-				-			

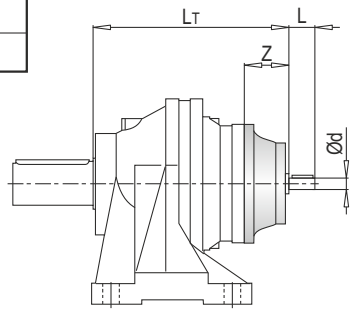

PL	EP 65			
	LT	Z	L	Ød
10001	424	153	105	65
10002	509			
10003	-			
10004	-			

PL	~ Kg						
	EL C 28	EL C 42	EML 42	EML 1"3/8 Z6	EM 65	EM 1"3/8 Z6	EP 65
10001	-	-	-	-	166.0	166	175
10002	170.5	171.0	174.0	174.0	182.0	182	191
10003	178.5	179.0	182.0	182.0	-	-	-
10004	184.5	185.0	188.0	188.0	-	-	-

PL 10000 CPC - Sonsuz Dişlili Redüktör Adaptörleri (PMRV/PRV) / Worm Gearbox Adaptors (PMRV/PRV) / Anschluss Für Schneckengetriebe (PMRV/PRV) / Predisposizioni Per Riduttori A Vite Senza Fine (PMRV/PRV) / Adaptation Pour Reducteurs A Vis Sans Fin (PMRV/PRV) / Acoplamiento Para Reductores De Tornillo Sin Fin (PMRV/PRV)

PL	PMRV/PRV 050					PMRV/PRV 063					PMRV/PRV 075				
	LM	l	h	MA	G	LM	l	h	MA	G	LM	l	h	MA	G
10001	-					-					-				
10002	468	50	110	60	80	477.5	63	135	72	95	456.5	75	161	86	112.5
10003	529					538.5					517.5				
10004	577					586.5					565.5				

PL	PMRV/PRV 090					PMRV/PRV 110					PMRV/PRV 130				
	LM	l	h	MA	G	LM	l	h	MA	G	LM	l	h	MA	G
10001	-					409	110	237.5	127.5	160	416.5	130	277.5	147.5	180
10002	466.5	90	193	103	129.5	494					501.5				
10003	517.5					-					-				
10004	575.5					-					-				

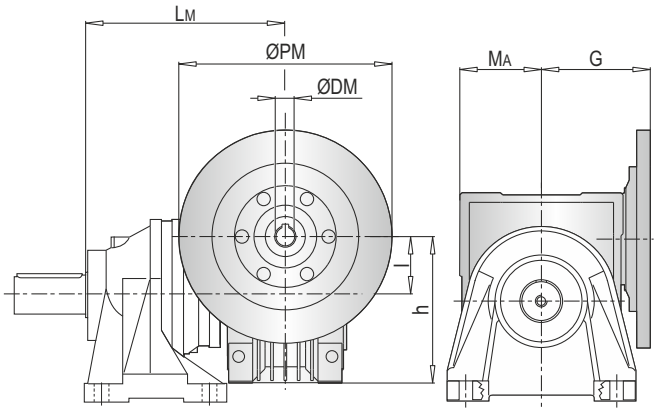

ØPM
ØDM
105

PL	PMRV/PRV~ Kg					
	050	063	075	090	110	130
10001	-	-	-	-	195	212
10002	173	176.5	179	184	211	228
10003	181	184.5	187	191	-	-
10004	187	190.5	193	197	-	-

PLB 10000 CPC - Elektrik Motor Adaptörleri (IEC) / Electric Motor Couplings (IEC) / Anbauvorrichtung Für Elektromotore (IEC) / Predisposizioni Per Motori Elettrici (IEC) / Adaptations Pour Moteurs Electriques (IEC) / Acoplamientos Para Motores Eléctricos (IEC)

PLB	IEC 80				IEC 90				IEC 100				IEC 112				IEC 132			
	A	LT	Z	ØD	A	LT	Z	ØD	A	LT	Z	ØD	A	LT	Z	ØD	A	LT	Z	ØD
10002	359	296	56	200	359	296	56	200	359	306	66	250	359	306	66	250	359	340	100	300
10003	444				444				444				444				444			
10004	478.5	216			478.5	216			478.5	226			478.5	226			478.5	260		

PLB	IEC 160				IEC 180			
	A	LT	Z	ØD	A	LT	Z	ØD
10002	359	379	139	350	359	379	139	350
10003	444				-			
10004	478.5	299			-			

PLB	IEC ~ Kg						
	80	90	100	112	132	160	180
10002	172	172	173	173	177	187	187
10003	180	180	181	181	185	195	-
10004	186	186	187	187	191	-	-

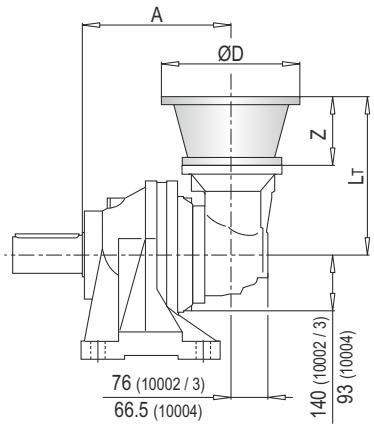

103

PLB 10000 CPC - Giriş Milleri / Input Shafts / Antriebswellen / Alberi Entrata / Arbres D'entree / Ejes De Entrada

PLB	EL C 28					EL C 42					EML 42					EML 1"3/8 Z6					EM 65				
	A	LT	Z	L	Ød	A	LT	Z	L	Ød	A	LT	Z	L	Ød	A	LT	Z	L	Ød	A	LT	Z	L	Ød
10002	359	304	64	50	28	359	304	64	82	42	359	334	94	82	42	359	334	94	106	1"3/8	359	377.5	121.5	105	65
10003	444					444					444					444					444				
10004	478.5	224				478.5	224				478.5	254				478.5	254				478.5	297.5			

PLB	EM 1"3/8 Z6					EP 65				
	A	LT	Z	L	Ød	A	LT	Z	L	Ød
10002	359	377.5	121.5	105	1"3/8	359	400	153	105	65
10003	444					444				
10004	478.5	297.5				478.5	329			

PLB	~ Kg						
	EL C 28	EL C 42	EML 42	EML 1"3/8 Z6	EM 65	EM 1"3/8 Z6	EP 65
10002	191.5	192.0	195.0	195.0	203.0	203.0	212.0
10003	211.5	212.0	215.0	215.0	223.0	223.0	232.0
10004	193.5	194.0	197.0	197.0	205.0	205.0	214.0

Ød 88-90

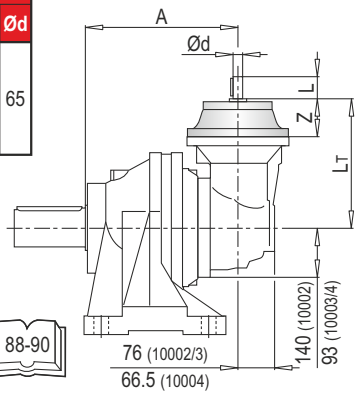

PL 10000 + PKD DG 4390

PL	~ Kg MS
10001	98
10002	115
10003	123
10004	129

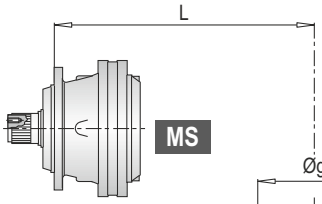

PL	~ Kg MC
10001	98
10002	115
10003	123
10004	129

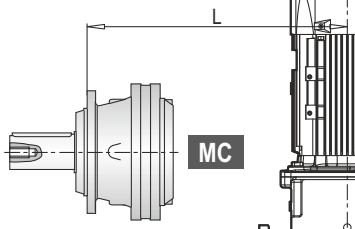

PL	~ Kg F
10001	66
10002	82
10003	90
10004	96

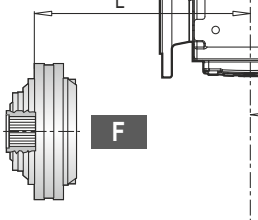

PL	~ Kg FS
10001	104
10002	120
10003	128
10004	134

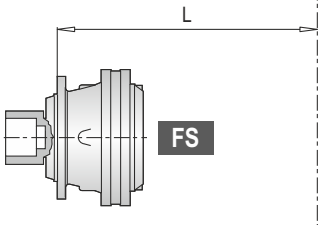

PL	~ Kg CPC
10001	149
10002	165
10003	173
10004	179

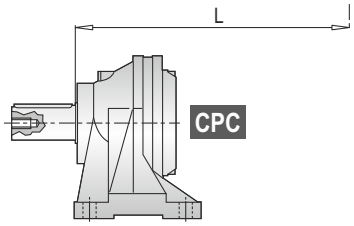

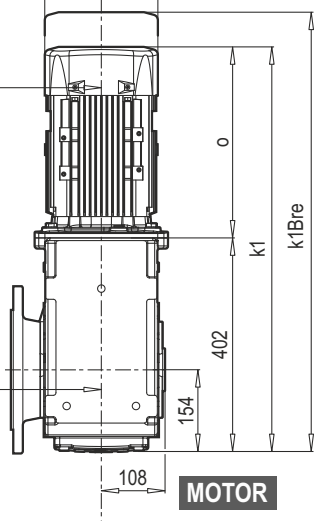

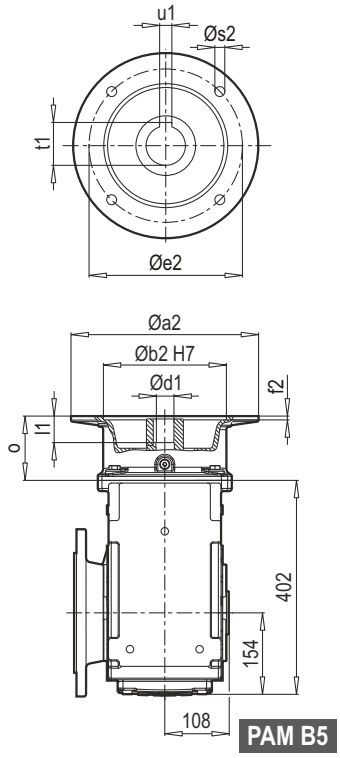

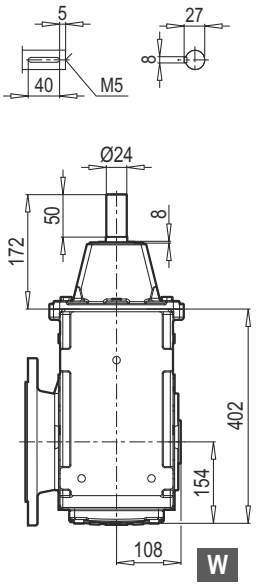

W ~ Kg	
PKD 4390	131

PL	L				
	MS	MC	F	FS	CPC
10001	412	412	299	412	459
10002	505	505	392	505	552
10003	566	566	453	566	613
10004	614	614	501	614	661

	MOTOR	g	g1	k1	k1Bre	o
PKD 4390	90 S	193	151	667	740	265
	90 L	193	151	687	760	285
	100 L	217	160	715	796	313
	112 M	232	168	760	840	358
	132 S	279	182	767	875	365
	132 M	279	182	802	943	400
	160 M	323	200	907	1059	505
	160 L	323	200	907	1059	505

~ Kg	
MOTOR	PKD 4390
90 S	124
90 L	126
100 L	137
112 M	143
132 S	160
132 M	171
160 M	202
160 L	211

	PAM B5	Øa2	Øb2	Øe2	f2	Øs2	Ød1	l1	t1	u1	o
PKD 4390	90	200	130	165	4.0	M10	24	50	27.3	8	72
	100	250	180	215	5.0	M12	28	60	31.3	8	75
	112	250	180	215	5.0	M12	28	60	31.3	8	75
	132	300	230	265	5.0	M12	38	80	41.3	10	94
	160	350	250	300	6.0	M16	42	110	45.3	12	120

~ Kg	
PAM B5	PKD 4390
90	116
100	117
112	117
132	126
160	134

PL	~ Kg MS
10001	98
10002	115
10003	123
10004	129

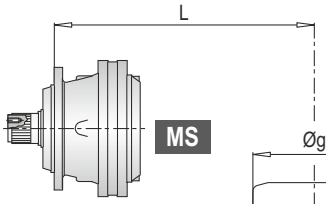

PL	~ Kg MC
10001	98
10002	115
10003	123
10004	129

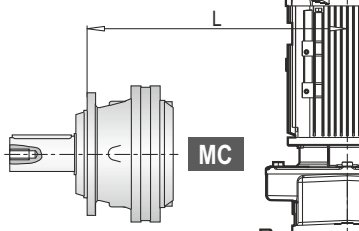

PL	~ Kg F
10001	66
10002	82
10003	90
10004	96

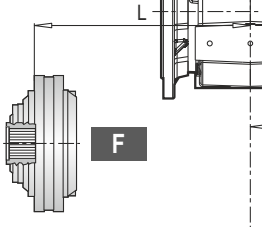

PL	~ Kg FS
10001	104
10002	120
10003	128
10004	134

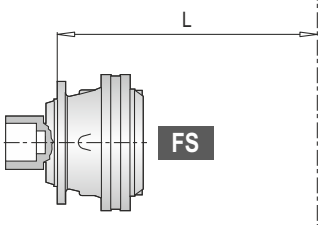

PL	~ Kg CPC
10001	149
10002	165
10003	173
10004	179

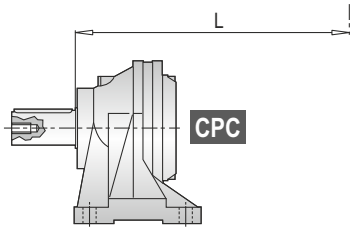

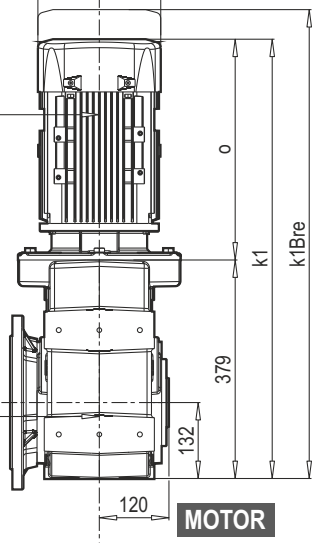

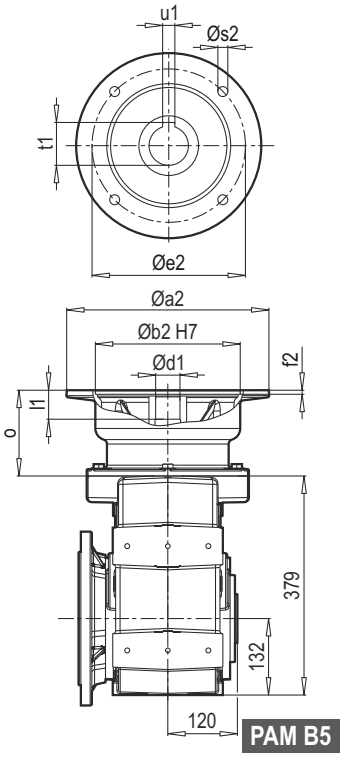

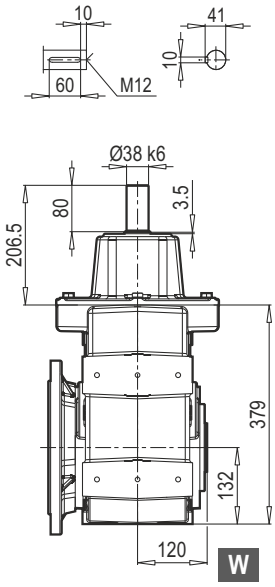

PL	L				
	MS	MC	F	FS	CPC
10001	433	433	320	433	480
10002	505	505	392	505	552
10003	566	566	453	566	613
10004	614	614	501	614	661

W ~ Kg	
K 60390	89

	MOTOR	g	g1	k1	k1Bre	o
K 60390	90 S	193	151	662	735	283
	90 L	193	151	682	755	303
	100 L	217	160	705	786	326
	112 M	232	168	759	839	380
	132 S	279	182	765	873	386
	132 M	279	182	800	941	421
	160 M/L	323	200	887	1039	508
	180 M/L	370	248	952	1114	573

~ Kg	
MOTOR	K 60390
90 S	88
90 L	90
100 L	101
112 M	107
132 S	124
132 M	135
160 M/L	176
180 M/L	220

	PAM B5	Øa2	Øb2	Øe2	f2	Øs2	Ød1	l1	t1	u1	o
K 60390	90	200	130	165	5	M10	24	52	27.3	8	61
	100	250	180	215	5.5	M12	28	62	31.3	8	76
	112	250	180	215	5.5	M12	28	62	31.3	8	76
	132	300	230	265	5.5	M12	38	82	41.3	10	101
	160	350	250	300	7	M16	42	112	45.3	12	148
	180	350	250	300	7	M16	48	112	51.8	14	148

~ Kg	
PAM B5	K 60390
90	80
100	84
112	84
132	87
160	93
180	93

AKSESUARLAR / ACCESSORIES / ZUBEHÖR / ACCESSORI / ACCESSOIRES / ACCESORIOS

YZ
Pinyon / Pinion / Ritzel
Pignoni / Pignon / Piñones

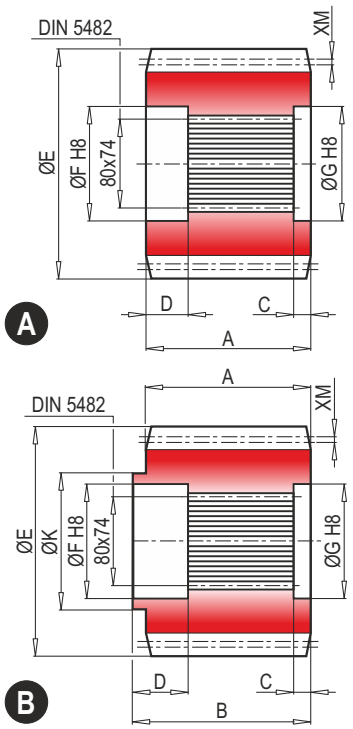

	Çıkış tipi Output type Abtriebs-version Versione Version Versión	M	Z	XM	A	B	C	D	E	F	G	K	Malzeme Material Material Materiale Matière Material	Kod Code Bestell-Nr. Codice Code Código
A	M	10	12	0	90	-	10	31	140	85	80	-	38NiCrMo4	1071.236.042
A	M	10	14	0	90	-	10	31	160	85	80	-	38NiCrMo4	1071.238.042
B	M	12	14	3	90	115	25	31	194.5	85	80	130	39NiCrMo3	1071.286.042

FF
Sabitleme rondelası / Stop bottom plate / Endscheibe /
Fondello di arresto / Bouchon de fermeture / Tapón de detención

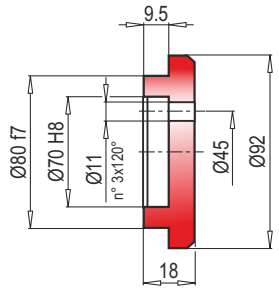

Kod / Code
Bestell - Nr. / Codice
Code / Código
1075.030.000

BS
Spline kaplin / Splined bushing / Innenverzahnte Buchse /
Boccola scanalata / Moyeu cannelé / Casquillo ranurado

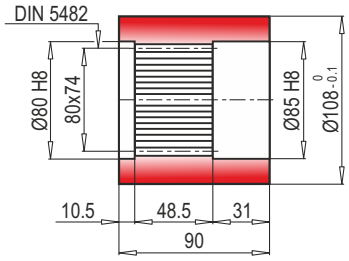

Malzeme / Material
Material / Materiale
Matière / Material
UNI C40
SAE 1040
DIN Ck40

Kod / Code
Bestell - Nr. / Codice
Code / Código
6171.103.076

KB
Spline mil / Splined rod / Außenverzahnte Welle /
Barra scanalata / Arbre cannelé / Barra ranurada

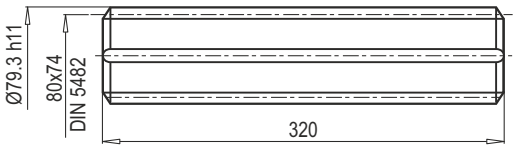

Malzeme / Material
Material / Materiale
Matière / Material

UNI 39NiCrMo3
Sertleşmiş ve tavlanmış / Hardened and tempered
Vergütet / Bonifié
Bonificado / Endurecido e temperado

Kod / Code
Bestell - Nr. / Codice
Code / Código
3071.406.042

FL
Flanş / Flange / Flansch
Flangia / Bride / Brida

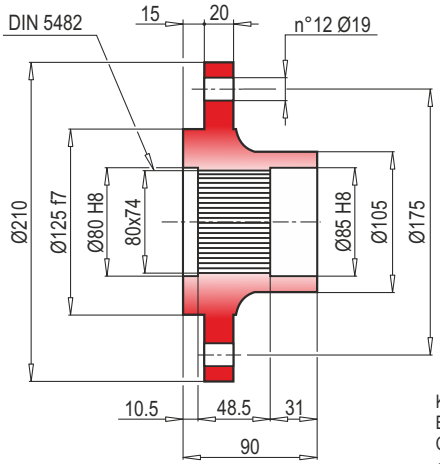

Kod / Code
Bestell - Nr. / Codice
Code / Código
6171.105.098

GA
Konik sıktırma / Shrink disc / Schrumpfscheibe /
Giunto di attrito / Frette de serrage / Disco de contracción

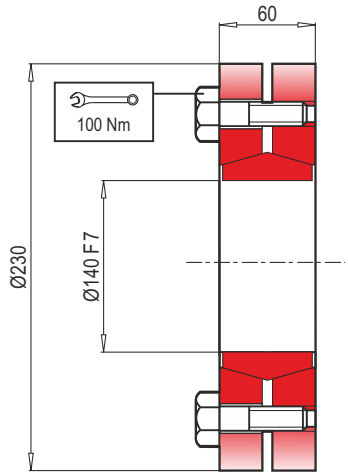

Maksimum moment
Max. torque
Max. Drehmoment
Coppia max.
Couple max.
Momento máx.
17.6 kNm

Kod / Code
Bestell - Nr. / Codice
Code / Código
5109.140.000

TR RADYAL YÜKLER (Fr)

Aşağıdaki grafikler istenilen $n_2$xh değerinin elde edilmesi için gerekli olan radyal yükleri ve K faktörlerini göstermektedir.

EN RADIAL LOADS (Fr)

The following curves show the radial loads and the K factors to obtain the required n2xh value.

DE RADIALLAST (Fr)

In den nachstehenden Diagrammen ist die Radiallast un der Koeffizient K dargestellt und kann mit dem gewünschten Wert $n_2$xh verglichen werden.

IT CARICHI RADIALI (Fr)

Nei diagrammi seguenti sono riportati i carichi radiali e i coefficienti K per rapportarli al valore $n_2$xh desiderato.

FR CHARGES RADIALES (Fr)

Dans les diagrammes suivants sont indiqués les charges radiales et les facteurs K de façon à obtenir la valeur $n_2$xh désirée.

ES CARGAS RADIALES (Fr)

En los siguientes diagramas se indican las cargas radiales y los coefici - entes K para obtener el valor requerido $n_2$xh.

M - CPC*

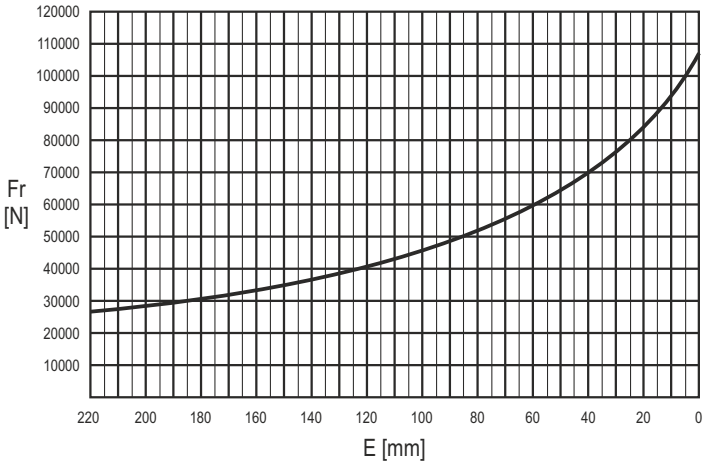

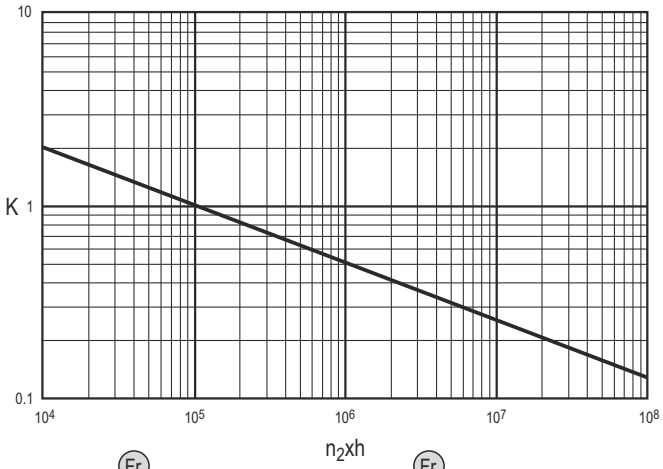

	n x h				
	10^5	10^4	10^6	10^7	10^8
M	Fr	Fr • K			
CPC*	Fr • 0.75	Fr • K • 0.75			

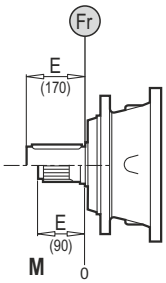

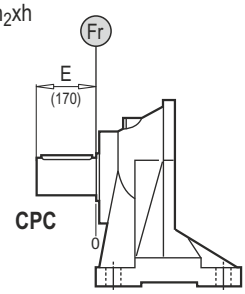

TR EKSENEL YÜKLER (Fa)

Tabloda yer alan eksenel yük değerleri, çıkış tipine ve uygulamanın yük yönüne göre değişir.

EN AXIAL LOADS (Fa)

The values of the axial loads in the table refer to the output versions and load direction of application.

DE AXIALLAST (Fa)

Die dargestellten Werte der Axiallast basieren auf der Version und der applizierten Lastrichtung.

IT CARICHI ASSIALI (Fa)

I valori dei carichi assiali indicati in tabella sono riferiti alle versioni e alla direzione di applicazione del carico.

FR CHARGES AXIALES (Fa)

Les valeurs des charges axiales indiquées dans le tableau se réfèrent aux versions et à la direction d'application de lacharge.

ES CARGAS AXIALES (Fa)

Los valores de las cargas axiales indicados en la tabla se refieren a las versiones y a la dirección de aplicación de la carga.

Fa [N]	M	CPC	
	40000	40000	←
	65000	65000	→

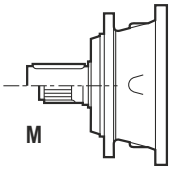

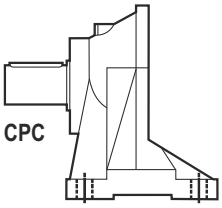

TEKNİK VERİLER / TECHNICAL DATA / TECHNISCHE DATEN / DATI TECNICI / DONNÉES TECHNIQUES / DATOS TÉCNICAS

	i_{ges}	M_2max (n1: 1400rpm) (Nm)
16001	3.56 ... 6.75	7440
16002	13.4 ... 48.9	9470
16003	57.6 ... 330.3	12960
16004	352.0 ... 2229.7	17920

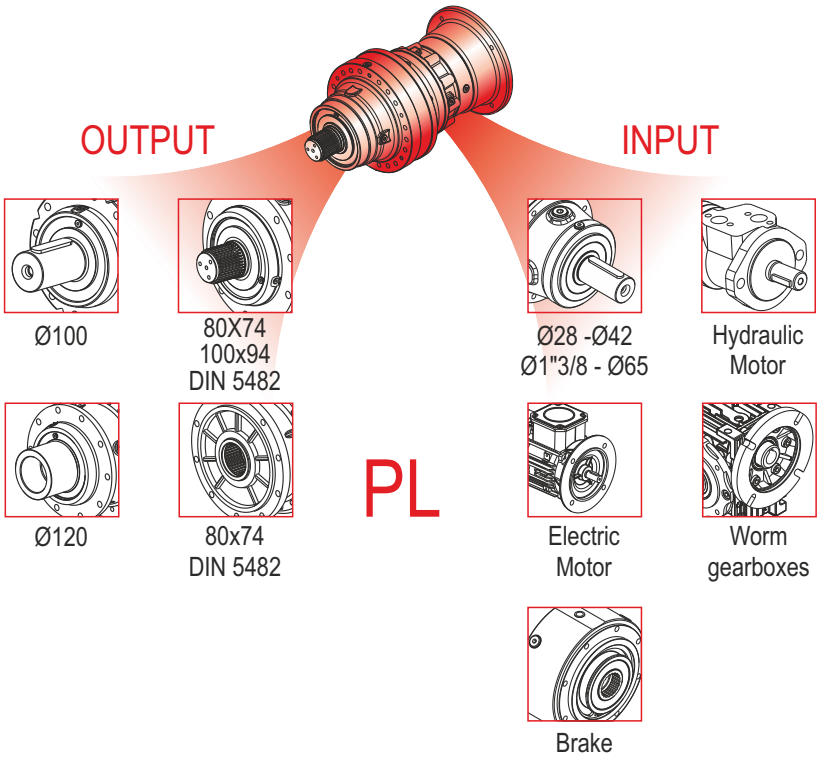

	i_{ges}	M_2max (n1: 1400rpm) (Nm)
16002	12.3 ... 36.7	9280
16003	46.4 ... 266.4	12410
16004	140.1 ... 969.0	16510

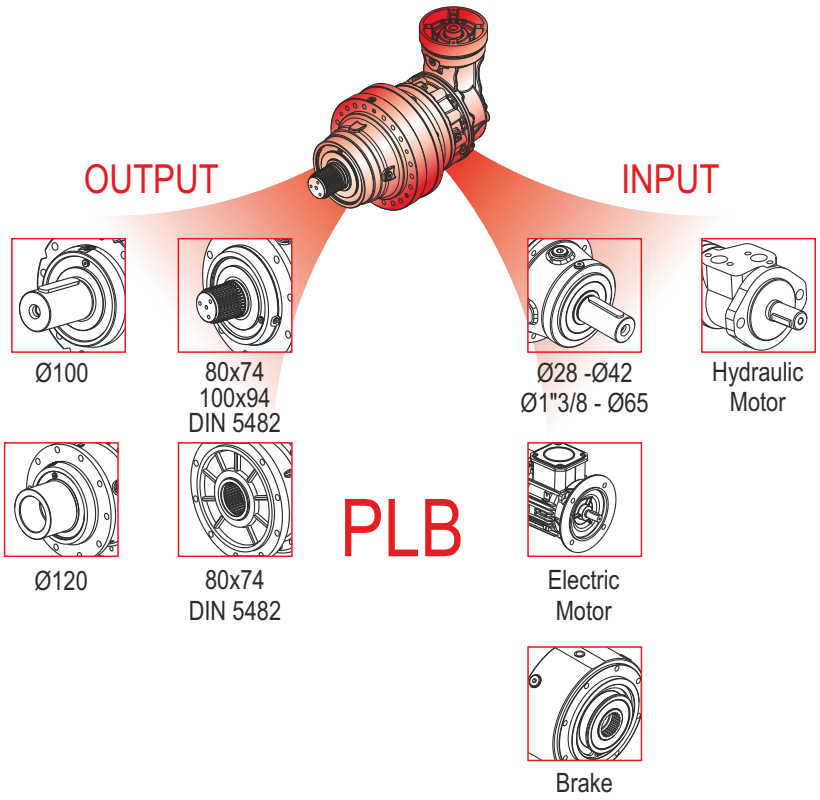

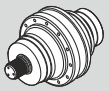	Pt [kW]	n_{1max} [min^{-1}]	i_{ges}	Mc [kNm] n_2 x h 10.000	n_2 x h 20.000	n_2 x h 50.000	n_2 x h 100.000	Giriş- Input - Antrieb - Entrata - Entrée - Entrada IEC (B5)	PMRV / PRV	EL - EML EM - EP - ET
PL 16001	40	2000	3.56 4.29 5.60 6.75	20.77 18.09 13.84 10.53	18.38 16.01 12.25 9.31	15.64 13.63 10.42 7.93	13.84 12.07 9.23 7.02	160 180 200 225	110 130	EM 65 EM 1"3/8 Z6 EP 65
PL 16002	23	2800	13.4 16.2 22.1 28.9 33.6 40.5 48.9	20.77 18.09 18.09 13.84 13.84 10.53 10.53	18.38 16.01 16.01 12.25 12.25 9.31 9.31	15.64 13.63 13.63 10.42 10.42 7.93 7.93	13.84 12.07 12.07 9.23 9.23 7.02 7.02	63 71 80 90 100 112 132 160 180	050 063 075 090 110 130	EL C 28 EL C 42 EML 42 EML 1"3/8 Z6 EM 65 EM 1"3/8 Z6 EP 65
PL 16003	15	2800	57.6 62.9 75.2 82.1 94.9 109.3 118.5 124.0 129.4 144.0 155.9 188.2 195.3 209.7 226.8 235.4 274.1 330.3	20.77 20.77 20.77 20.77 18.09 18.09 13.84 18.09 13.84 13.84 13.84 13.84 13.84 10.53 13.84 10.53 13.84 10.53	18.38 18.38 18.38 18.38 16.01 16.01 12.25 16.01 12.25 12.25 12.25 12.25 12.25 9.31 12.25 9.31 12.25 9.31	15.64 15.64 15.64 15.64 13.63 13.63 10.42 13.63 10.42 10.42 10.42 10.42 10.42 7.93 10.42 7.93 10.42 7.93	13.84 13.84 13.84 13.84 12.07 12.07 9.23 12.07 9.23 9.23 9.23 9.23 9.23 7.02 9.23 7.02 9.23 7.02	63 71 80 90 100 112 132 160	050 063 075 090	EL C 28 EL C 42 EML 42 EML 1"3/8 Z6
PL 16004	11	2800	352.0 388.6 421.2 440.9 459.9 507.7 531.4 554.4 576.1 612.0 640.5 724.4 806.4 907.3 1008.9 1093.7 1270.1 1530.9 1849.8 2229.7	20.77 20.77 20.77 18.09 20.77 20.77 18.09 20.77 13.84 18.09 18.09 13.84 13.84 13.84 18.09 13.84 13.84 13.84 13.84 10.53	18.38 18.38 18.38 16.01 18.38 18.38 16.01 18.38 12.25 16.01 16.01 12.25 12.25 12.25 16.01 12.25 12.25 12.25 12.25 9.31	15.64 15.64 15.64 13.63 15.64 15.64 13.63 15.64 10.42 13.63 13.63 10.42 10.42 10.42 13.63 10.42 10.42 10.42 10.42 7.93	13.84 13.84 13.84 12.07 13.84 13.84 12.07 13.84 9.23 12.07 12.07 9.23 9.23 9.23 12.07 9.23 9.23 9.23 9.23 7.02	63 71 80 90 100 112 132 160	050 063 075 090	EL C 28 EL C 42 EML 42 EML 1"3/8 Z6

	Pt [kW]	n_{1max} [min^{-1}]	i_{ges}	Mc [kNm]				Giriş- Input - Antrieb - Entrata - Entrée - Entrada	
				n_2 x h	n_2 x h	n_2 x h	n_2 x h		
				10.000	20.000	50.000	100.000	IEC (B5)	EL - EML EM - EP - ET
PLB 16002	23	2800	12.3 14.8 19.3 23.3 30.5 36.7	20.77 18.09 13.84 10.53 13.84 10.53	18.38 16.01 12.25 9.31 12.25 9.31	15.64 13.63 10.42 7.93 10.42 7.93	13.84 12.07 9.23 7.02 9.23 7.02	80 90 100 112 132 160 180	EM 65 EM 1"3/8 Z6 EP 65
PLB 16003	15	2800	46.4 50.7 61.1 76.5 88.8 96.2 116.1 120.6 125.8 140.0 157.5 182.9 221.0 266.4	20.77 20.77 18.09 18.09 18.09 18.09 13.84 18.09 13.84 18.09 13.84 13.84 13.84 10.53	18.38 18.38 16.01 16.01 16.01 16.01 12.25 16.01 12.25 16.01 12.25 12.25 12.25 9.31	15.64 15.64 13.63 13.63 13.63 13.63 10.42 13.63 10.42 13.63 10.42 10.42 10.42 7.93	13.84 13.84 12.07 12.07 12.07 12.07 9.23 12.07 9.23 12.07 9.23 9.23 9.23 7.02	80 90 100 112 132 160	EL C 28 EL C 42 EML 42 EML 1"3/8 Z6 EM 65 EM 1"3/8 Z6 EP 65
PLB 16004	11	2800	140.1 168.9 184.4 203.5 230.9 240.9 290.4 301.8 320.6 347.5 379.5 418.9 457.4 510.4 551.9 665.3 803.9 969.0	20.77 20.77 18.09 18.09 18.09 13.84 18.09 13.84 18.09 13.84 13.84 13.84 13.84 13.84 13.84 13.84 13.84 10.53	18.38 18.38 16.01 16.01 16.01 12.25 16.01 12.25 16.01 12.25 12.25 12.25 12.25 12.25 12.25 12.25 12.25 9.31	15.64 15.64 13.63 13.63 13.63 10.42 13.63 10.42 13.63 10.42 10.42 10.42 10.42 10.42 10.42 10.42 10.42 7.93	13.84 13.84 12.07 12.07 12.07 9.23 12.07 9.23 12.07 9.23 9.23 9.23 9.23 9.23 9.23 9.23 9.23 7.02	80 90 100 112 132 160	EL C 28 EL C 42 EML 42 EML 1"3/8 Z6 EM 65 EM 1"3/8 Z6 EP 65

(n_2 x h = 20.000)

$$M_{max} = M_c \times 2$$

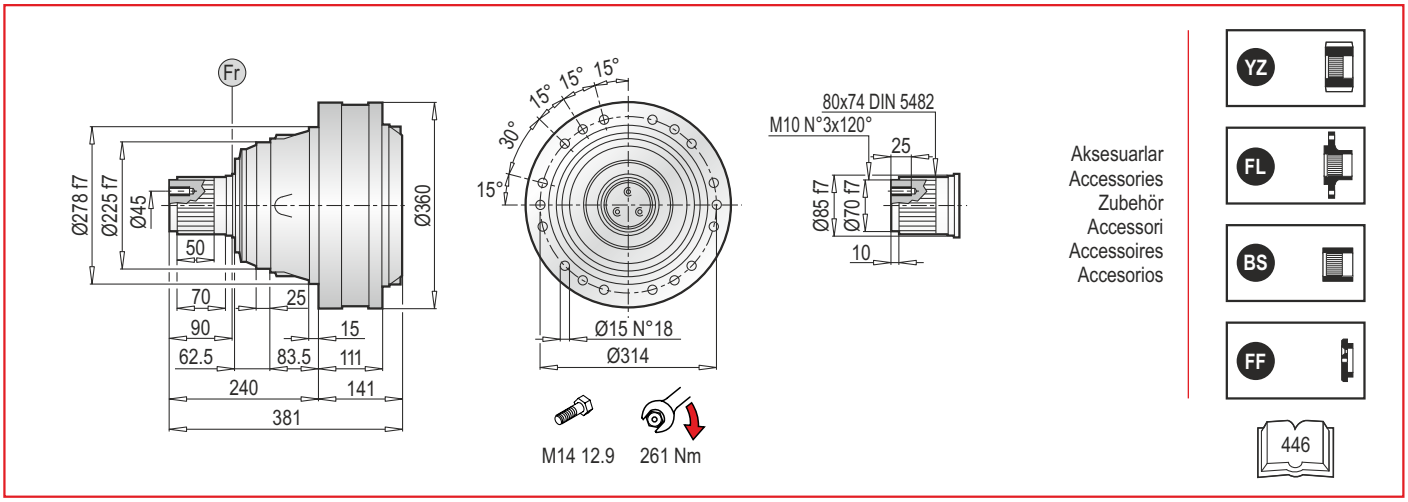

PL 16000 MS - Elektrik Motor Adaptörleri (IEC) / Electrıc Motor Couplings (IEC) / Anbauvorrichtung Für Elektromotore (IEC) / Predisposizioni Per Motori Elettrici (IEC) / Adaptations Pour Moteurs Electriques (IEC) / Acoplamientos Para Motores Eléctricos (IEC)

PL	IEC 63			IEC 71			IEC 80			IEC 90			IEC 100			IEC 112		
	LT	Z	ØD	LT	Z	ØD	LT	Z	ØD	LT	Z	ØD	LT	Z	ØD	LT	Z	ØD
16001	-			-			-			-			-			-		
16002	248.5			248.5			268.5			268.5			278.5			278.5		
16003	309.5	36	140	309.5	36	160	329.5	56	200	329.5	56	200	339.5	66	250	339.5	66	250
16004	357.5			357.5			377.5			377.5			387.5			387.5		

PL	IEC 132			IEC 160			IEC 180			IEC 200			IEC 225		
	LT	Z	ØD	LT	Z	ØD	LT	Z	ØD	LT	Z	ØD	LT	Z	ØD
16001	-			259	118	350	259	118	350	289	148	400	280	139	450
16002	312.5			351.5			351.5	139	350	-			-		
16003	373.5	100	300	412.5	139	350	-			-			-		
16004	421.5			460.5			-			-			-		

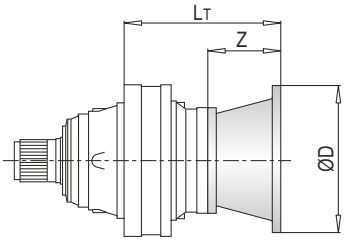

PL	IEC ~ Kg										
	63	71	80	90	100	112	132	160	180	200	225
16001	-	-	-	-	-	-	-	129	129	139	144
16002	128	128	130	130	131	131	135	145	145	-	-
16003	136	136	138	138	139	139	143	153	-	-	-
16004	142	142	144	144	145	145	149	149	-	-	-

PL 16000 MS - Giriş Milleri / Input Shafts / Antriebswellen / Alberi Entrata / Arbres D'entree / Ejes De Entrada

PL	EL C 28				EL C 42				EML 42				EML 1"3/8 Z6				EM 65				EM 1"3/8 Z6			
	LT	Z	L	Ød	LT	Z	L	Ød	LT	Z	L	Ød	LT	Z	L	Ød	LT	Z	L	Ød	LT	Z	L	Ød
16001	-				-				-				-				262.5	121.5	105	65	262.5	121.5	105	1"3/8
16002	276.5				276.5				306.5				306.5				334				334			
16003	337.5	64	50	28	337.5	64	82	42	367.5	94	82	42	367.5	94	106	1"3/8	-				-			
16004	385.5				385.5				415.5				415.5				-				-			

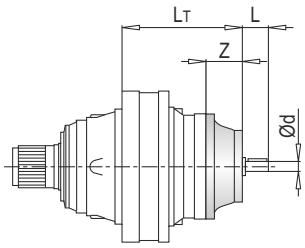

PL	EP 65			
	LT	Z	L	Ød
16001	294	153	105	65
16002	365.5			
16003	-			
16004	-			

PL	~ Kg						
	EL C 28	EL C 42	EML 42	EML 1"3/8 Z6	EM 65	EM 1"3/8 Z6	EP 65
16001	-	-	-	-	124.0	124.0	133.0
16002	128.5	129.0	132.0	132.0	140.0	140.0	149.0
16003	136.5	137.0	140.0	140.0	-	-	-
16004	142.5	143.0	146.0	146.0	-	-	-

PL 16000 MS - Sonsuz Dişlili Redüktör Adaptörleri (PMRV/PRV) / Worm Gearbox Adaptors (PMRV/PRV) / Anschluss Für Schneckengetriebe (PMRV/PRV) / Predisposizioni Per Riduttori A Vite Senza Fine (PMRV/PRV) / Adaptation Pour Reducteurs A Vis Sans Fin (PMRV/PRV) / Acoplamiento Para Reductores De Tornillo Sin Fin (PMRV/PRV)

PL	PMRV/PRV 050					PMRV/PRV 063					PMRV/PRV 075				
	LM	l	h	MA	G	LM	l	h	MA	G	LM	l	h	MA	G
16001	-					-					-				
16002	334	50	110	60	80	343.5	63	135	72	95	322.5	75	161	86	112.5
16003	395					404.5					383.5				
16004	443					452.5					431.5				

PL	PMRV/PRV 090					PMRV/PRV 110					PMRV/PRV 130				
	LM	l	h	MA	G	LM	l	h	MA	G	LM	l	h	MA	G
16001	-					275	110	237.5	127.5	160	280.5	130	277.5	147.5	180
16002	332.5	90	193	103	129.5	346.5					352				
16003	393.5					-					-				
16004	441.5					-					-				

PL	PMRV/PRV ~ Kg					
	050	063	075	090	110	130
16001	-	-	-	-	153	170
16002	131	134.5	137	142	169	186
16003	139	142.5	145	150	-	-
16004	145	148.5	151	156	-	-

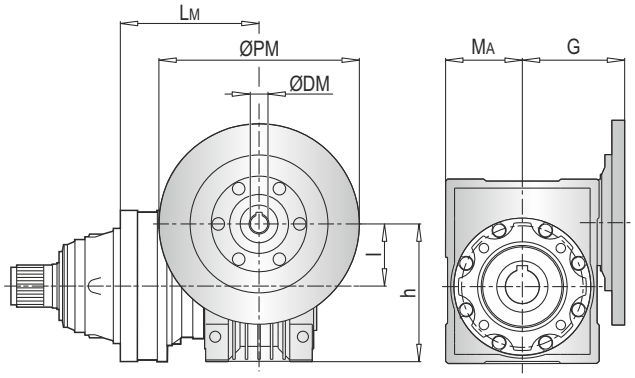

ØPM
ØDM
105

PLB 16000 MS - Elektrik Motor Adaptörleri (IEC) / Electric Motor Couplings (IEC) / Anbauvorrichtung Für Elektromotore (IEC) / Predisposizioni Per Motori Elettrici (IEC) / Adaptations Pour Moteurs Electriques (IEC) / Acoplamientos Para Motores Eléctricos (IEC)

PLB	IEC 63				IEC 71				IEC 80				IEC 90				IEC 100			
	A	LT	Z	ØD	A	LT	Z	ØD	A	LT	Z	ØD	A	LT	Z	ØD	A	LT	Z	ØD
16002	229	276	36	140	229	276	36	160	229	296	56	200	229	296	56	200	229	306	66	250
16003	314				314				314				314				314			
16004	348.5	196			348.5	196			348.5	216			348.5	216			348.5	226		

PLB	IEC 112				IEC 132				IEC 160				IEC 180			
	A	LT	Z	ØD	A	LT	Z	ØD	A	LT	Z	ØD	A	LT	Z	ØD
16002	229	306	66	250	229	340	100	300	229	379	139	350	229	379	139	350
16003	314				314				314				-			
16004	348.5	226			348.5	260			348.5	299			-			

PLB	IEC ~ Kg								
	63	71	80	90	100	112	132	160	180
16002	149	149	151	151	152	152	156	166	166
16003	168	168	170	170	171	171	175	185	-
16004	151	151	153	153	154	154	159	169	-

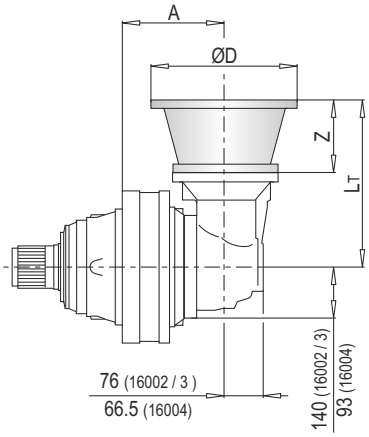

103

PLB 16000 MS - Giriş Milleri / Input Shafts / Antriebswellen / Alberi Entrata / Arbres D'entree / Ejes De Entrada

PLB	EL C 28					EL C 42					EML 42					EML 1"3/8 Z6					EM 65				
	A	LT	Z	L	Ød	A	LT	Z	L	Ød	A	LT	Z	L	Ød	A	LT	Z	L	Ød	A	LT	Z	L	Ød
16002	229	304	64	50	28	229	304	64	82	42	229	334	94	82	42	229	334	94	106	1"3/8	229	361.5	121.5	105	65
16003	314					314					314					314					314				
16004	348.5	224				348.5	224				348.5	254				348.5	254				348.5	281.5			

PLB	EM 1"3/8 Z6					EP 65				
	A	LT	Z	L	Ød	A	LT	Z	L	Ød
16002	229	361.5	121.5	105	1"3/8	229	393	153	105	65
16003	314					314				
16004	348.5	281.5				348.5	313			

PLB	~ Kg						
	EL C 28	EL C 42	EML 42	EML 1"3/8 Z6	EM 65	EM 1"3/8 Z6	EP 65
16002	149.5	150.0	153.0	153.0	161.0	161.0	170.0
16003	168.5	169.0	172.0	172.0	180.0	180.0	189.0
16004	151.5	152.0	155.0	155.0	163.0	163.0	172.0

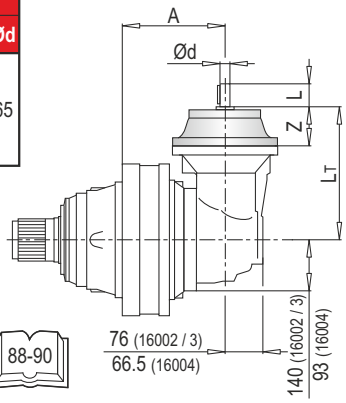

Ød 88-90

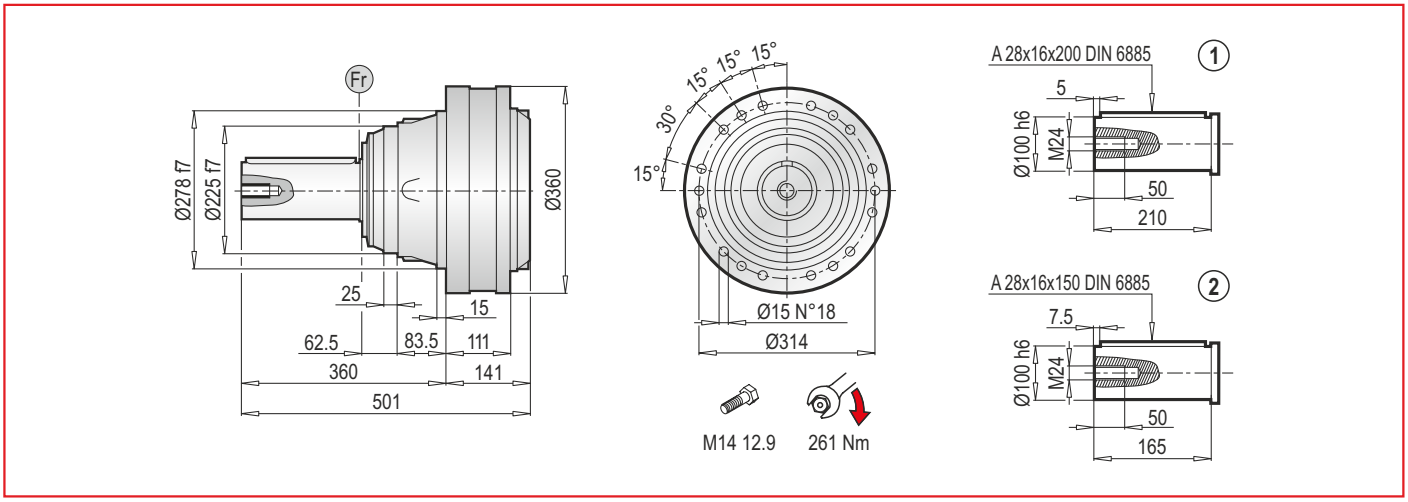

PL 16000 MC - Elektrik Motor Adaptörleri (IEC) / Electrıc Motor Couplings (IEC) / Anbauvorrichtung Für Elektromotore (IEC) / Predisposizioni Per Motori Elettrici (IEC) / Adaptations Pour Moteurs Electriques (IEC) / Acoplamientos Para Motores Eléctricos (IEC)

PL	IEC 63			IEC 71			IEC 80			IEC 90			IEC 100			IEC 112		
	LT	Z	ØD	LT	Z	ØD	LT	Z	ØD	LT	Z	ØD	LT	Z	ØD	LT	Z	ØD
16001	-			-			-			-			-			-		
16002	248.5			248.5			268.5			268.5			278.5			278.5		
16003	309.5	36	140	309.5	36	160	329.5	56	200	329.5	56	200	339.5	66	250	339.5	66	250
16004	357.5			357.5			377.5			377.5			387.5			387.5		

PL	IEC 132			IEC 160			IEC 180			IEC 200			IEC 225		
	LT	Z	ØD	LT	Z	ØD	LT	Z	ØD	LT	Z	ØD	LT	Z	ØD
16001	-			259	118	350	259	118	350	289	148	400	280	139	450
16002	312.5			351.5			351.5	139	350	-			-		
16003	373.5	100	300	412.5	139	350	-			-			-		
16004	421.5			460.5			-			-			-		

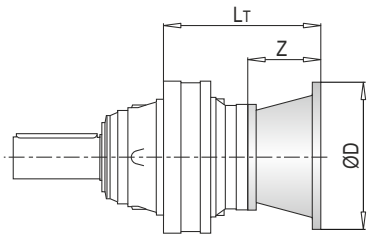

PL	IEC ~ Kg										
	63	71	80	90	100	112	132	160	180	200	225
16001	-	-	-	-	-	-	-	129	129	139	144
16002	128	128	130	130	131	131	135	145	145	-	-
16003	136	136	138	138	139	139	143	153	-	-	-
16004	142	142	144	144	145	145	149	149	-	-	-

PL 16000 MC - Giriş Milleri / Input Shafts / Antriebswellen / Alberi Entrata / Arbres D'entree / Ejes De Entrada

PL	EL C 28				EL C 42				EML 42				EML 1"3/8 Z6				EM 65				EM 1"3/8 Z6			
	LT	Z	L	Ød	LT	Z	L	Ød	LT	Z	L	Ød	LT	Z	L	Ød	LT	Z	L	Ød	LT	Z	L	Ød
16001	-				-				-				-				262.5	121.5	105	65	262.5	121.5	105	1"3/8
16002	276.5				276.5				306.5				306.5				334				334			
16003	337.5	64	50	28	337.5	64	82	42	367.5	94	82	42	367.5	94	106	1"3/8	-				-			
16004	385.5				385.5				415.5				415.5				-				-			

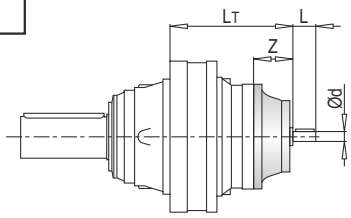

PL	EP 65			
	LT	Z	L	Ød
16001	294	153	105	65
16002	365.5			
16003	-			
16004	-			

PL	~ Kg						
	EL C 28	EL C 42	EML 42	EML 1"3/8 Z6	EM 65	EM 1"3/8 Z6	EP 65
16001	-	-	-	-	124.0	124.0	133.0
16002	128.5	129.0	132.0	132.0	140.0	140.0	149.0
16003	136.5	137.0	140.0	140.0	-	-	-
16004	142.5	143.0	146.0	146.0	-	-	-

PL 16000 MC - Sonsuz Dişlili Redüktör Adaptörleri (PMRV/PRV) / Worm Gearbox Adaptors (PMRV/PRV) / Anschluss Für Schneckengetriebe (PMRV/PRV) / Predisposizioni Per Riduttori A Vite Senza Fine (PMRV/PRV) / Adaptation Pour Reducteurs A Vis Sans Fin (PMRV/PRV) / Acoplamiento Para Reductores De Tornillo Sin Fin (PMRV/PRV)

PL	PMRV/PRV 050					PMRV/PRV 063					PMRV/PRV 075				
	LM	l	h	MA	G	LM	l	h	MA	G	LM	l	h	MA	G
16001	-					-					-				
16002	334	50	110	60	80	343.5	63	135	72	95	322.5	75	161	86	112.5
16003	395					404.5					383.5				
16004	443					452.5					431.5				

PL	PMRV/PRV 090					PMRV/PRV 110					PMRV/PRV 130				
	LM	l	h	MA	G	LM	l	h	MA	G	LM	l	h	MA	G
16001	-					275	110	237.5	127.5	160	280.5	130	277.5	147.5	180
16002	332.5	90	193	103	129.5	346.5					352				
16003	393.5					-					-				
16004	441.5					-					-				

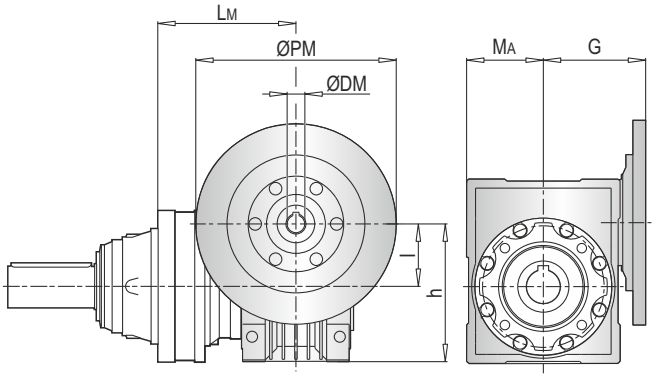

ØPM
ØDM
105

PL	PMRV/PRV ~ Kg					
	050	063	075	090	110	130
16001	-	-	-	-	153	170
16002	131	134.5	137	142	169	186
16003	139	142.5	145	150	-	-
16004	145	148.5	151	156	-	-

PLB 16000 MC - Elektrik Motor Adaptörleri (IEC) / Electric Motor Couplings (IEC) / Anbauvorrichtung Für Elektromotore (IEC) / Predisposizioni Per Motori Elettrici (IEC) / Adaptations Pour Moteurs Electriques (IEC) / Acoplamientos Para Motores Eléctricos (IEC)

PLB	IEC 80				IEC 90				IEC 100				IEC 112				IEC 132			
	A	LT	Z	ØD	A	LT	Z	ØD	A	LT	Z	ØD	A	LT	Z	ØD	A	LT	Z	ØD
16002	229	296	56	200	229	296	56	200	229	306	66	250	229	306	66	250	229	340	100	300
16003	314				314				314				314				314			
16004	348.5	216			348.5	216			348.5	226			348.5	226			348.5	260		

PLB	IEC 160				IEC 180			
	A	LT	Z	ØD	A	LT	Z	ØD
16002	229	379	139	350	229	379	139	350
16003	314				-			
16004	348.5	299			-			

PLB	IEC ~ Kg						
	80	90	100	112	132	160	180
16002	151	151	152	152	156	166	166
16003	170	170	171	171	175	185	-
16004	153	153	154	154	158	168	-

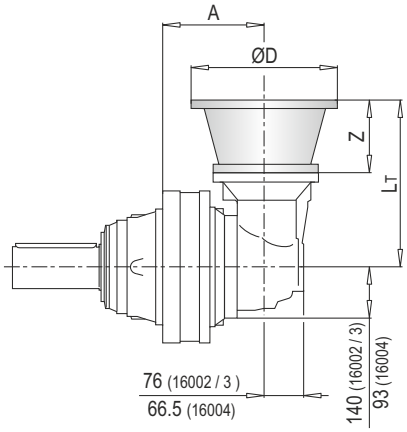

103

PLB 16000 MC - Giriş Milleri / Input Shafts / Antriebswellen / Alberi Entrata / Arbres D'entree / Ejes De Entrada

PLB	EL C 28					EL C 42					EML 42					EML 1"3/8 Z6					EM 65				
	A	LT	Z	L	Ød	A	LT	Z	L	Ød	A	LT	Z	L	Ød	A	LT	Z	L	Ød	A	LT	Z	L	Ød
16002	229	304	64	50	28	229	304	64	82	42	229	334	94	82	42	229	334	94	106	1"3/8	229	361.5	121.5	105	65
16003	314					314					314					314					314				
16004	348.5	224				348.5	224				348.5	254				348.5	254				348.5	281.5			

PLB	EM 1"3/8 Z6					EP 65				
	A	LT	Z	L	Ød	A	LT	Z	L	Ød
16002	229	361.5	121.5	105	1"3/8	229	393	153	105	65
16003	314					314				
16004	348.5	281.5				348.5	313			

PLB	~ Kg						
	EL C 28	EL C 42	EML 42	EML 1"3/8 Z6	EM 65	EM 1"3/8 Z6	EP 65
16002	149.5	150.0	153.0	153.0	161.0	161.0	170.0
16003	168.5	169.0	172.0	172.0	180.0	180.0	189.0
16004	151.5	152.0	155.0	155.0	163.0	163.0	172.0

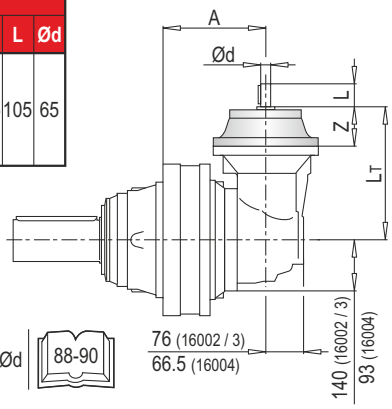

Ød 88-90

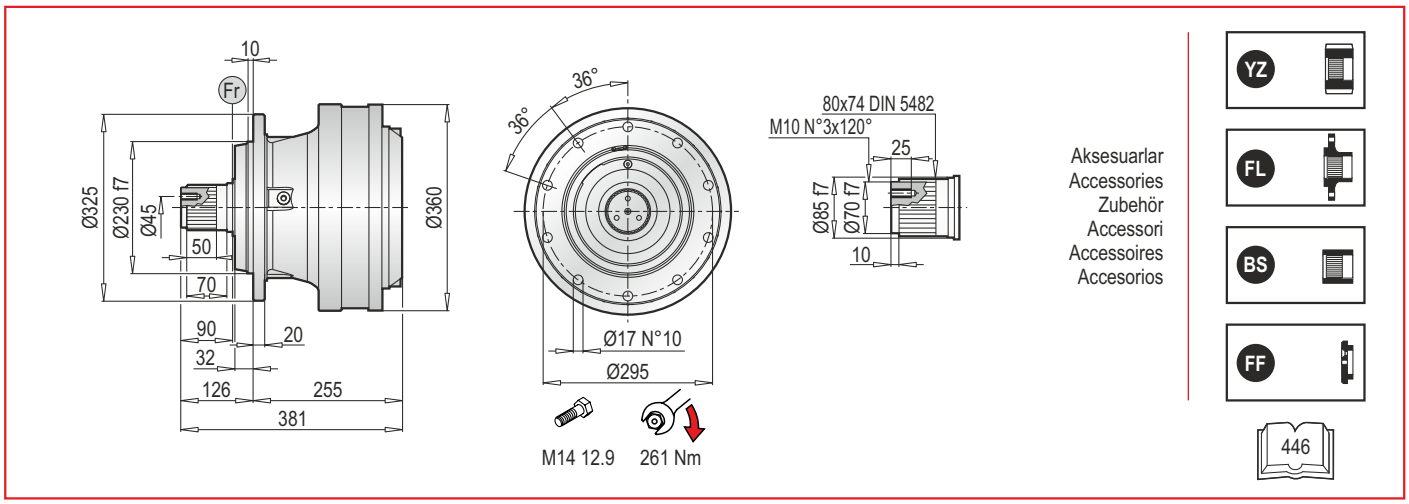

PL 16000 MSF - Elektrik Motor Adaptörleri (IEC) / Electric Motor Couplings (IEC) / Anbauvorrichtung Für Elektromotore (IEC) / Predisposizioni Per Motori Elettrici (IEC) / Adaptations Pour Moteurs Electriques (IEC) / Acoplamientos Para Motores Eléctricos (IEC)

PL	IEC 63			IEC 71			IEC 80			IEC 90			IEC 100			IEC 112		
	LT	Z	ØD	LT	Z	ØD	LT	Z	ØD	LT	Z	ØD	LT	Z	ØD	LT	Z	ØD
16001	-			-			-			-			-			-		
16002	362.5			362.5			382.5			382.5			392.5			392.5		
16003	423.5	36	140	423.5	36	160	443.5	56	200	443.5	56	200	453.5	66	250	453.5	66	250
16004	471.5			471.5			491.5			491.5			501.5			501.5		

PL	IEC 132			IEC 160			IEC 180			IEC 200			IEC 225		
	LT	Z	ØD	LT	Z	ØD	LT	Z	ØD	LT	Z	ØD	LT	Z	ØD
16001	-			373	118	350	373	118	350	403	148	400	394	139	450
16002	426.5			465.5			465.5	139	350	-			-		
16003	487.5	100	300	526.5	139	350	-			-			-		
16004	535.5			574.5			-			-			-		

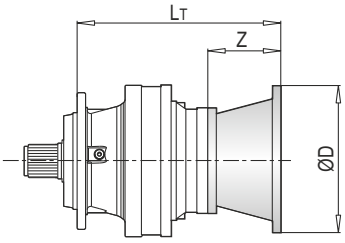

PL	IEC ~ Kg										
	63	71	80	90	100	112	132	160	180	200	225
16001	-	-	-	-	-	-	-	136	136	146	151
16002	135	135	137	137	138	138	142	152	152	-	-
16003	143	143	145	145	146	146	150	160	-	-	-
16004	149	149	151	151	152	152	156	156	-	-	-

PL 16000 MSF - Giriş Milleri / Input Shafts / Antriebswellen / Alberi Entrata / Arbres D'entree / Ejes De Entrada

PL	EL C 28				EL C 42				EML 42				EML 1"3/8 Z6				EM 65				EM 1"3/8 Z6			
	LT	Z	L	Ød	LT	Z	L	Ød	LT	Z	L	Ød	LT	Z	L	Ød	LT	Z	L	Ød	LT	Z	L	Ød
16001	-				-				-				-				376.5	121.5	105	65	376.5	121.5	105	1"3/8
16002	390.5				390.5				420.5				420.5				461.5				461.5			
16003	451.5	64	50	28	451.5	64	82	42	481.5	94	82	42	481.5	94	106	1"3/8	-				-			
16004	499.5				499.5				529.5				529.5				-				-			

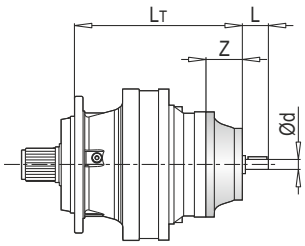

PL	EP 65			
	LT	Z	L	Ød
16001	408	153	105	65
16002	493			
16003	-			
16004	-			

PL	~ Kg						
	EL C 28	EL C 42	EML 42	EML 1"3/8 Z6	EM 65	EM 1"3/8 Z6	EP 65
16001	-	-	-	-	131	131	140
16002	135.5	136	139	139	147	147	156
16003	143.5	144	147	147	-	-	-
16004	149.5	150	153	153	-	-	-

PL 16000 MSF - Sonsuz Dişlili Redüktör Adaptörleri (PMRV/PRV) / Worm Gearbox Adaptors (PMRV/PRV) / Anschluss Für Schneckengetriebe (PMRV/PRV) / Predisposizioni Per Riduttori A Vite Senza Fine (PMRV/PRV) / Adaptation Pour Reducteurs A Vis Sans Fin (PMRV/PRV) / Acoplamiento Para Reductores De Tornillo Sin Fin (PMRV/PRV)

PL	PMRV/PRV 050					PMRV/PRV 063					PMRV/PRV 075				
	LM	l	h	MA	G	LM	l	h	MA	G	LM	l	h	MA	G
16001	-					-					-				
16002	452	50	110	60	80	461.5	63	135	72	95	440.5	75	161	86	112.5
16003	513					522.5					501.5				
16004	561					570.5					549.5				

PL	PMRV/PRV 090					PMRV/PRV 110					PMRV/PRV 130				
	LM	l	h	MA	G	LM	l	h	MA	G	LM	l	h	MA	G
16001	-					393	110	237.5	127.5	160	400.5	130	277.5	147.5	180
16002	450.5	90	193	103	129.5	478					485.5				
16003	511.5					-					-				
16004	559.5					-					-				

PL	PMRV/PRV ~ Kg					
	050	063	075	090	110	130
16001	-	-	-	-	160	177
16002	138	141.5	144	149	176	193
16003	146	149.5	152	157	-	-
16004	152	155.5	158	163	-	-

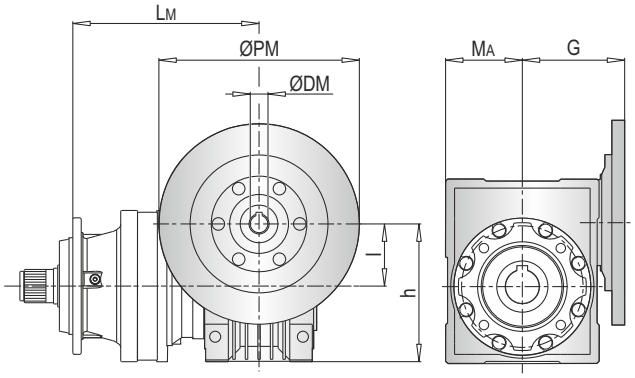

ØPM
ØDM
105

PLB 16000 MSF - Elektrik Motor Adaptörleri (IEC) / Electric Motor Couplings (IEC) / Anbauvorrichtung Für Elektromotore (IEC) / Predisposizioni Per Motori Elettrici (IEC) / Adaptations Pour Moteurs Electriques (IEC) / Acoplamientos Para Motores Eléctricos (IEC)

PLB	IEC 80				IEC 90				IEC 100				IEC 112				IEC 132			
	A	LT	Z	ØD	A	LT	Z	ØD	A	LT	Z	ØD	A	LT	Z	ØD	A	LT	Z	ØD
16002	343	296	56	200	345	296	56	200	343	306	66	250	343	306	66	250	343	340	100	300
16003	428				428				428				428				428			
16004	462.5	216			462.5	216			462.5	226			462.5	226			462.5	260		

PLB	IEC 160				IEC 180			
	A	LT	Z	ØD	A	LT	Z	ØD
16002	343	379	139	350	343	379	139	350
16003	428				-			
16004	462.5	299			-			

PLB	IEC ~ Kg						
	80	90	100	112	132	160	180
16002	158	158	159	159	163	173	173
16003	177	177	178	178	182	192	-
16004	160	160	161	161	166	166	-

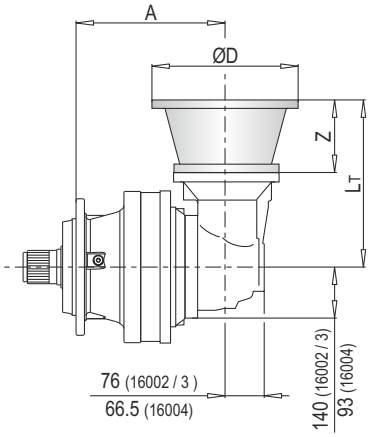

103

PLB 16000 MSF - Giriş Milleri / Input Shafts / Antriebswellen / Alberi Entrata / Arbres D'entree / Ejes De Entrada

PLB	EL C 28					EL C 42					EML 42					EML 1"3/8 Z6					EM 65				
	A	LT	Z	L	Ød	A	LT	Z	L	Ød	A	LT	Z	L	Ød	A	LT	Z	L	Ød	A	LT	Z	L	Ød
16002	343	304	64	50	28	343	304	64	82	42	343	334	94	82	42	343	334	94	106	1"3/8	343	377.5	121.5	105	65
16003	428					428					428					428					428				
16004	462.5	224				462.5	224				462.5	254				462.5	254				462.5	297.5			

PLB	EM 1"3/8 Z6					EP 65				
	A	LT	Z	L	Ød	A	LT	Z	L	Ød
16002	343	377.5	121.5	105	1"3/8	343	409	153	105	65
16003	428					428				
16004	462.5	297.5				462.5	329			

PLB	~ Kg						
	EL C 28	EL C 42	EML 42	EML 1"3/8 Z6	EM 65	EM 1"3/8 Z6	EP 65
16002	156.5	157	160	160	168	168	177
16003	175.5	176	179	179	187	187	196
16004	158.5	159	162	162	170	170	179

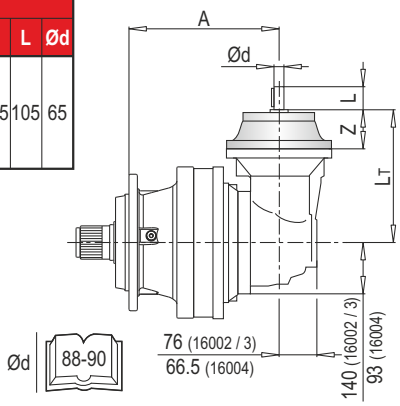

Ød 88-90

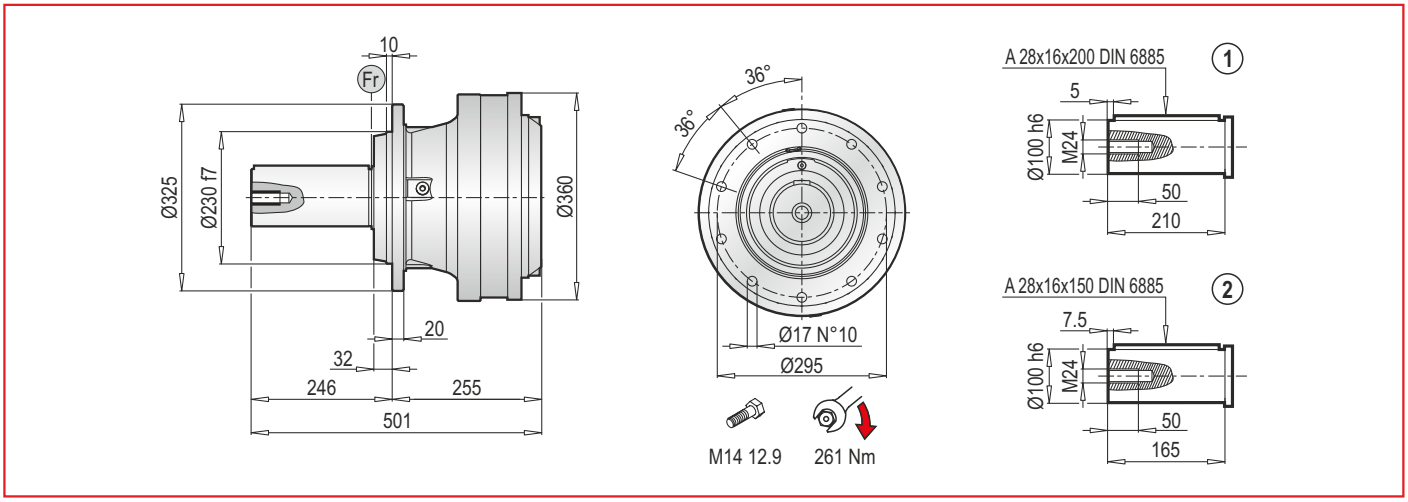

PL 16000 MCF - Elektrik Motor Adaptörleri (IEC) / Electrıc Motor Couplings (IEC) / Anbauvorrichtung Für Elektromotore (IEC) / Predisposizioni Per Motori Elettrici (IEC) / Adaptations Pour Moteurs Electriques (IEC) / Acoplamientos Para Motores Eléctricos (IEC)

PL	IEC 63			IEC 71			IEC 80			IEC 90			IEC 100			IEC 112		
	LT	Z	ØD	LT	Z	ØD	LT	Z	ØD	LT	Z	ØD	LT	Z	ØD	LT	Z	ØD
16001	-			-			-			-			-			-		
16002	362.5			362.5			382.5			382.5			392.5			392.5		
16003	423.5	36	140	423.5	36	160	443.5	56	200	443.5	56	200	453.5	66	250	453.5	66	250
16004	471.5			471.5			491.5			491.5			501.5			501.5		

PL	IEC 132			IEC 160			IEC 180			IEC 200			IEC 225		
	LT	Z	ØD	LT	Z	ØD	LT	Z	ØD	LT	Z	ØD	LT	Z	ØD
16001	-			373	118	350	373	118	350	403	148	400	394	139	450
16002	426.5			465.5			465.5	139	350	-			-		
16003	487.5	100	300	526.5	139	350	-			-			-		
16004	535.5			574.5			-			-			-		

PL	IEC ~ Kg										
	63	71	80	90	100	112	132	160	180	200	225
16001	-	-	-	-	-	-	-	136	136	146	151
16002	135	135	137	137	138	138	142	152	152	-	-
16003	143	143	145	145	146	146	150	160	-	-	-
16004	149	149	151	151	152	152	156	156	-	-	-

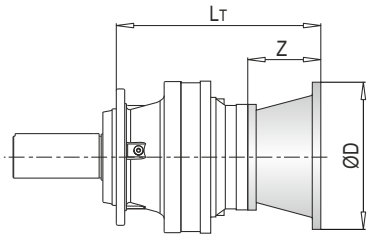

PL 16000 MCF - Giriş Milleri / Input Shafts / Antriebswellen / Alberi Entrata / Arbres D'entree / Ejes De Entrada

PL	EL C 28				EL C 42				EML 42				EML 1"3/8 Z6				EM 65				EM 1"3/8 Z6			
	LT	Z	L	Ød	LT	Z	L	Ød	LT	Z	L	Ød	LT	Z	L	Ød	LT	Z	L	Ød	LT	Z	L	Ød
16001	-				-				-				-				376.5	121.5	105	65	376.5	121.5	105	1"3/8
16002	390.5				390.5				420.5				420.5				461.5				461.5			
16003	451.5	64	50	28	451.5	64	82	42	481.5	94	82	42	481.5	94	106	1"3/8	-				-			
16004	499.5				499.5				529.5				529.5				-				-			

PL	EP 65			
	LT	Z	L	Ød
16001	408	153	105	65
16002	493			
16003	-			
16004	-			

PL	~ Kg						
	EL C 28	EL C 42	EML 42	EML 1"3/8 Z6	EM 65	EM 1"3/8 Z6	EP 65
16001	-	-	-	-	131	131	140
16002	135.5	136	139	139	147	147	156
16003	143.5	144	147	147	-	-	-
16004	149.5	150	153	153	-	-	-

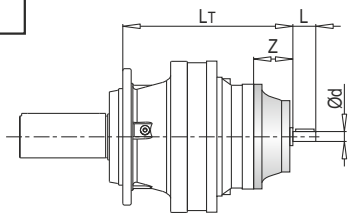

PL 16000 MCF - Sonsuz Dişlili Redüktör Adaptörleri (PMRV/PRV) / Worm Gearbox Adaptors (PMRV/PRV) / Anschluss Für Schneckengetriebe (PMRV/PRV) / Predisposizioni Per Riduttori A Vite Senza Fine (PMRV/PRV) / Adaptation Pour Reducteurs A Vis Sans Fin (PMRV/PRV) / Acoplamiento Para Reductores De Tornillo Sin Fin (PMRV/PRV)

PL	PMRV/PRV 050					PMRV/PRV 063					PMRV/PRV 075				
	LM	l	h	MA	G	LM	l	h	MA	G	LM	l	h	MA	G
16001	-					-					-				
16002	452	50	110	60	80	461.5	63	135	72	95	440.5	75	161	86	112.5
16003	513					522.5					501.5				
16004	561					570.5					549.5				

PL	PMRV/PRV 090					PMRV/PRV 110					PMRV/PRV 130				
	LM	l	h	MA	G	LM	l	h	MA	G	LM	l	h	MA	G
16001	-					393	110	237.5	127.5	160	400.5	130	277.5	147.5	180
16002	450.5	90	193	103	129.5	478					485.5				
16003	511.5					-					-				
16004	559.5					-					-				

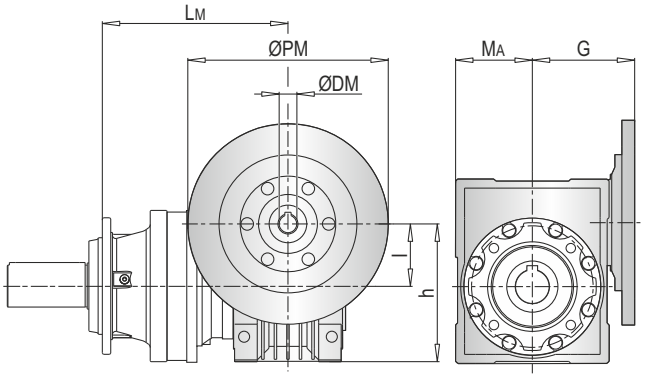

ØPM
ØDM
105

PL	PMRV/PRV ~ Kg					
	050	063	075	090	110	130
16001	-	-	-	-	160	177
16002	138	141.5	144	149	176	193
16003	146	149.5	152	157	-	-
16004	152	155.5	158	163	-	-

PLB 16000 MCF - Elektrik Motor Adaptörleri (IEC) / Electric Motor Couplings (IEC) / Anbauvorrichtung Für Elektromotore (IEC) / Predisposizioni Per Motori Elettrici (IEC) / Adaptations Pour Moteurs Electriques (IEC) / Acoplamientos Para Motores Eléctricos (IEC)

PLB	IEC 80				IEC 90				IEC 100				IEC 112				IEC 132			
	A	LT	Z	ØD	A	LT	Z	ØD	A	LT	Z	ØD	A	LT	Z	ØD	A	LT	Z	ØD
16002	343	296	56	200	345	296	56	200	343	306	66	250	343	306	66	250	343	340	100	300
16003	428				428				428				428				428			
16004	462.5	216			462.5	216			462.5	226			462.5	226			462.5	260		

PLB	IEC 160				IEC 180			
	A	LT	Z	ØD	A	LT	Z	ØD
16002	343	379	139	350	343	379	139	350
16003	428				-			
16004	462.5	299			-			

PLB	IEC ~ Kg						
	80	90	100	112	132	160	180
16002	158	158	159	159	163	173	173
16003	177	177	178	178	182	192	-
16004	160	160	161	161	166	166	-

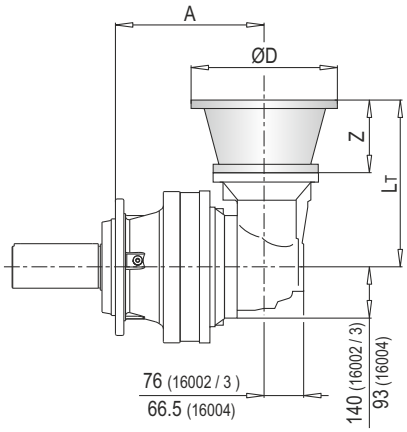

103

PLB 16000 MCF - Giriş Milleri / Input Shafts / Antriebswellen / Alberi Entrata / Arbres D'entree / Ejes De Entrada

PLB	EL C 28					EL C 42					EML 42					EML 1"3/8 Z6					EM 65				
	A	LT	Z	L	Ød	A	LT	Z	L	Ød	A	LT	Z	L	Ød	A	LT	Z	L	Ød	A	LT	Z	L	Ød
16002	343	304	64	50	28	343	304	64	82	42	343	334	94	82	42	343	334	94	106	1"3/8	343	377.5	121.5	105	65
16003	428					428					428					428					428				
16004	462.5	224				462.5	224				462.5	254				462.5	254				462.5	297.5			

PLB	EM 1"3/8 Z6					EP 65				
	A	LT	Z	L	Ød	A	LT	Z	L	Ød
16002	343	377.5	121.5	105	1"3/8	343	409	153	105	65
16003	428					428				
16004	462.5	297.5				462.5	329			

PLB	~ Kg						
	EL C 28	EL C 42	EML 42	EML 1"3/8 Z6	EM 65	EM 1"3/8 Z6	EP 65
16002	156.5	157	160	160	168	168	177
16003	175.5	176	179	179	187	187	196
16004	158.5	159	162	162	170	170	179

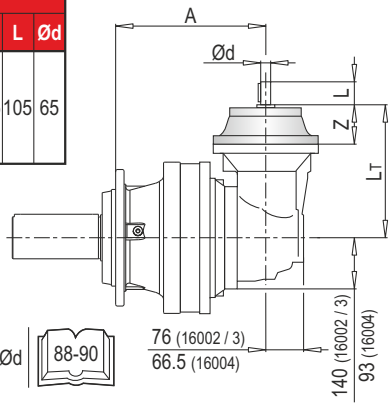

Ød 88-90

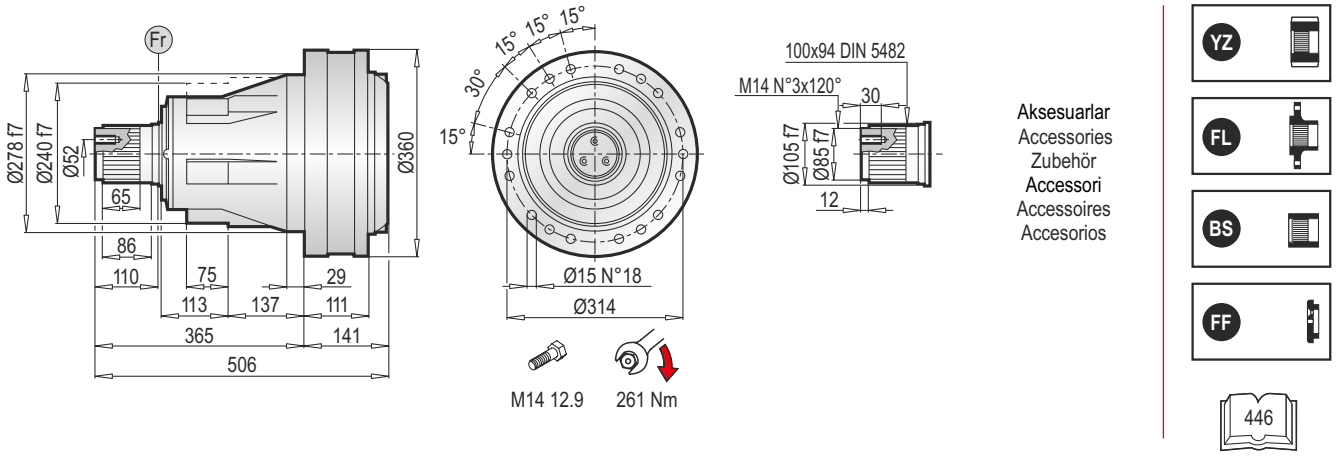

PL 16000 PS - Elektrik Motor Adaptörleri (IEC) / Electrıc Motor Couplings (IEC) /Anbauvorrichtung Für Elektromotore (IEC) / Predisposizioni Per Motori Elettrici (IEC) / Adaptations Pour Moteurs Electriques (IEC) /Acoplamientos Para Motores Eléctricos (IEC)

PL	IEC 63			IEC 71			IEC 80			IEC 90			IEC 100			IEC 112		
	LT	Z	ØD	LT	Z	ØD	LT	Z	ØD	LT	Z	ØD	LT	Z	ØD	LT	Z	ØD
16001	-			-			-			-			-			-		
16002	248.5			248.5			268.5			268.5			278.5			278.5		
16003	309.5	36	140	309.5	36	160	329.5	56	200	329.5	56	200	339.5	66	250	339.5	66	250
16004	357.5			357.5			377.5			377.5			387.5			387.5		

PL	IEC 132			IEC 160			IEC 180			IEC 200			IEC 225		
	LT	Z	ØD	LT	Z	ØD	LT	Z	ØD	LT	Z	ØD	LT	Z	ØD
16001	-			259	118	350	259	118	350	289	148	400	280	139	450
16002	312.5			351.5			351.5	139	350	-			-		
16003	373.5	100	300	412.5	139	350	-			-			-		
16004	421.5			460.5			-			-			-		

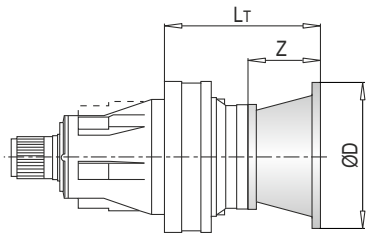

PL	IEC ~ Kg										
	63	71	80	90	100	112	132	160	180	200	225
16001	-	-	-	-	-	-	-	156	156	166	171
16002	155	155	157	157	158	158	162	172	172	-	-
16003	163	163	165	165	166	166	170	180	-	-	-
16004	169	169	171	171	172	172	176	186	-	-	-

PL 16000 PS - Giriş Milleri / Input Shafts / Antriebswellen / Alberi Entrata / Arbres D'entree / Ejes De Entrada

PL	EL C 28				EL C 42				EML 42				EML 1"3/8 Z6				EM 65				EM 1"3/8 Z6			
	LT	Z	L	Ød	LT	Z	L	Ød	LT	Z	L	Ød	LT	Z	L	Ød	LT	Z	L	Ød	LT	Z	L	Ød
16001	-				-				-				-				262.5	121.5	105	65	262.5	121.5	105	1"3/8
16002	276.5				276.5				306.5				306.5				334				334			
16003	337.5	64	50	28	337.5	64	82	42	367.5	94	82	42	367.5	94	106	1"3/8	-				-			
16004	385.5				385.5				415.5				415.5				-				-			

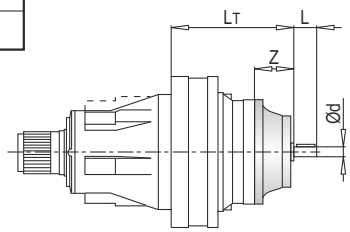

PL	EP 65			
	LT	Z	L	Ød
16001	294	153	105	65
16002	365.5			
16003	-			
16004	-			

PL	~ Kg						
	EL C 28	EL C 42	EML 42	EML 1"3/8 Z6	EM 65	EM 1"3/8 Z6	EP 65
16001	-	-	-	-	151.0	151.0	160.0
16002	155.5	156.0	159.0	159.0	167.0	167.0	176.0
16003	163.5	164.0	167.0	167.0	-	-	-
16004	169.5	170.0	173.0	173.0	-	-	-

PL 16000 PS - Sonsuz Dişlili Redüktör Adaptörleri (PMRV/PRV) / Worm Gearbox Adaptors (PMRV/PRV) / Anschluss Für Schneckengetriebe (PMRV/PRV) / Predisposizioni Per Riduttori A Vite Senza Fine (PMRV/PRV) / Adaptation Pour Reducteurs A Vis Sans Fin (PMRV/PRV) / Acoplamiento Para Reductores De Tornillo Sin Fin (PMRV/PRV)

PL	PMRV/PRV 050					PMRV/PRV 063					PMRV/PRV 075				
	LM	l	h	MA	G	LM	l	h	MA	G	LM	l	h	MA	G
16001	-					-					-				
16002	338	50	110	60	80	347.5	63	135	72	95	326.5	75	161	86	112.5
16003	399					408.5					387.5				
16004	447					456.5					435.5				

PL	PMRV/PRV 090					PMRV/PRV 110					PMRV/PRV 130				
	LM	l	h	MA	G	LM	l	h	MA	G	LM	l	h	MA	G
16001	-					279	110	237.5	127.5	160	286.5	130	277.5	147.5	180
16002	336.5	90	193	103	129.5	364					371.5				
16003	397.5					-					-				
16004	445.5					-					-				

PL	PMRV/PRV ~ Kg					
	050	063	075	090	110	130
16001	-	-	-	-	180	197
16002	158	161.5	164	169	196	213
16003	166	169.5	172	177	-	-
16004	172	175.5	178	183	-	-

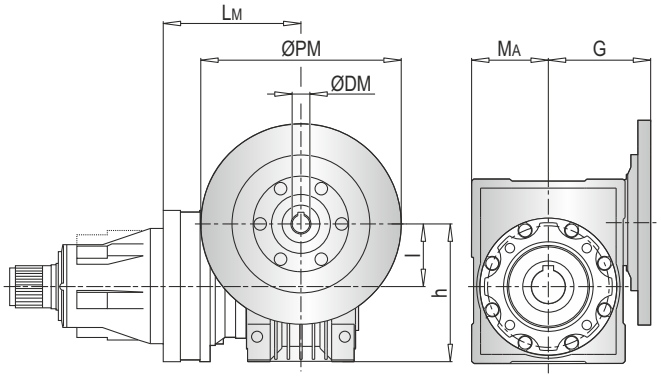

ØPM
ØDM
105

PLB 16000 PS - Elektrik Motor Adaptörleri (IEC) / Electric Motor Couplings (IEC) / Anbauvorrichtung Für Elektromotore (IEC) / Predisposizioni Per Motori Elettrici (IEC) / Adaptations Pour Moteurs Electriques (IEC) / Acoplamientos Para Motores Eléctricos (IEC)

PLB	IEC 80				IEC 90				IEC 100				IEC 112				IEC 132			
	A	LT	Z	ØD	A	LT	Z	ØD	A	LT	Z	ØD	A	LT	Z	ØD	A	LT	Z	ØD
16002	229	296	56	200	229	296	56	200	229	306	66	250	229	306	66	250	229	340	100	300
16003	314				314				314				314				314			
16004	348.5	216			348.5	216			348.5	226			348.5	226			348.5	260		

PLB	IEC 160				IEC 180			
	A	LT	Z	ØD	A	LT	Z	ØD
16002	229	379	139	350	229	379	139	350
16003	314				-			
16004	348.5	299			-			

PLB	IEC ~ Kg						
	80	90	100	112	132	160	180
16002	178	178	179	179	183	193	193
16003	197	197	198	198	202	212	-
16004	180	180	181	181	185	195	-

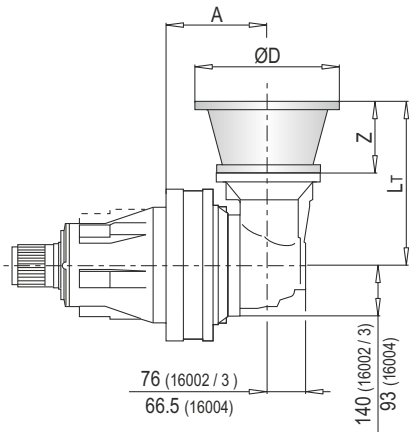

103

PLB 16000 PS - Giriş Milleri / Input Shafts / Antriebswellen / Alberi Entrata / Arbres D'entree / Ejes De Entrada

PLB	EL C 28					EL C 42					EML 42					EML 1"3/8 Z6					EM 65				
	A	LT	Z	L	Ød	A	LT	Z	L	Ød	A	LT	Z	L	Ød	A	LT	Z	L	Ød	A	LT	Z	L	Ød
16002	229	304	64	50	28	229	304	64	82	42	229	334	94	82	42	229	334	94	106	1"3/8	229	377.5	121.5	105	65
16003	314					314					314					314					314				
16004	348.5	224				348.5	224				348.5	254				348.5	254				348.5	297.5			

PLB	EM 1"3/8 Z6					EP 65				
	A	LT	Z	L	Ød	A	LT	Z	L	Ød
16002	229	377.5	121.5	105	1"3/8	229	409	153	105	65
16003	314					314				
16004	348.5	297.5				348.5	329			

PLB	~ Kg						
	EL C 28	EL C 42	EML 42	EML 1"3/8 Z6	EM 65	EM 1"3/8 Z6	EP 65
16002	176.5	177.0	180.0	180.0	188.0	188.0	197.0
16003	195.5	196.0	199.0	199.0	207.0	207.0	216.0
16004	178.5	179.0	182.0	182.0	190.0	190.0	199.0

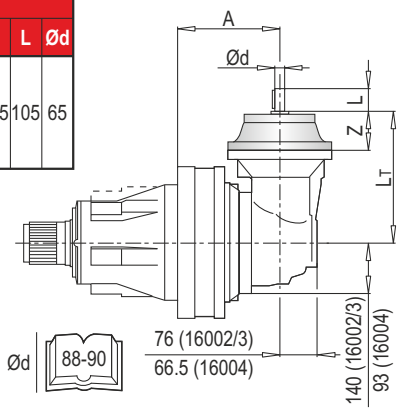

Ød 88-90

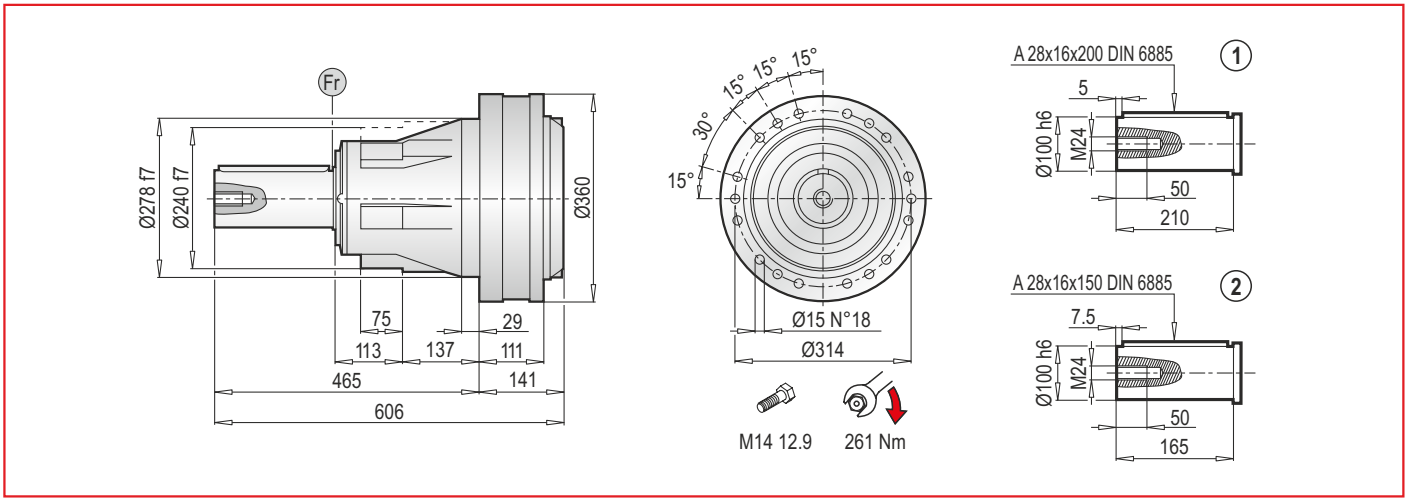

PL 16000 PC - Elektrik Motor Adaptörleri (IEC) / Electrıc Motor Couplings (IEC) /Anbauvorrichtung Für Elektromotore (IEC) / Predisposizioni Per Motori Elettrici (IEC) / Adaptations Pour Moteurs Electriques (IEC) /Acoplamientos Para Motores Eléctricos (IEC)

PL	IEC 63			IEC 71			IEC 80			IEC 90			IEC 100			IEC 112		
	LT	Z	ØD	LT	Z	ØD	LT	Z	ØD	LT	Z	ØD	LT	Z	ØD	LT	Z	ØD
16001	-			-			-			-			-			-		
16002	248.5			248.5			268.5			268.5			278.5			278.5		
16003	309.5	36	140	309.5	36	160	329.5	56	200	329.5	56	200	339.5	66	250	339.5	66	250
16004	357.5			357.5			377.5			377.5			387.5			387.5		

PL	IEC 132			IEC 160			IEC 180			IEC 200			IEC 225		
	LT	Z	ØD	LT	Z	ØD	LT	Z	ØD	LT	Z	ØD	LT	Z	ØD
16001	-			259	118	350	259	118	350	289	148	400	289	148	450
16002	312.5			351.5			351.5	139	350	-			-		
16003	373.5	100	300	412.5	139	350	-			-			-		
16004	421.5			460.5			-			-			-		

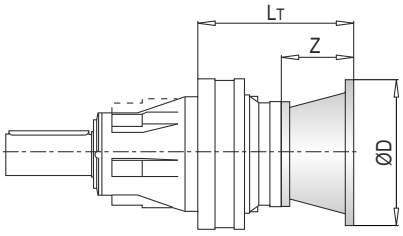

PL	IEC ~ Kg										
	63	71	80	90	100	112	132	160	180	200	225
16001	-	-	-	-	-	-	-	156	156	166	171
16002	155	155	157	157	158	158	162	172	172	-	-
16003	163	163	165	165	166	166	170	180	-	-	-
16004	169	169	171	171	172	172	176	186	-	-	-

PL 16000 PC - Giriş Milleri / Input Shafts / Antriebswellen / Alberi Entrata / Arbres D'entree / Ejes De Entrada

PL	EL C 28				EL C 42				EML 42				EML 1"3/8 Z6				EM 65				EM 1"3/8 Z6			
	LT	Z	L	Ød	LT	Z	L	Ød	LT	Z	L	Ød	LT	Z	L	Ød	LT	Z	L	Ød	LT	Z	L	Ød
16001	-				-				-				-				262.5	121.5	105	65	262.5	121.5	105	1"3/8
16002	276.5				276.5				306.5				306.5				347.5				347.5			
16003	337.5	64	50	28	337.5	64	82	42	367.5	94	82	42	367.5	94	106	1"3/8	-				-			
16004	385.5				385.5				415.5				415.5				-				-			

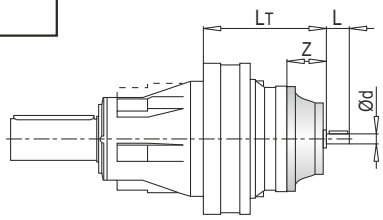

PL	EP 65			
	LT	Z	L	Ød
16001	294	153	105	65
16002	379			
16003	-			
16004	-			

PL	~ Kg						
	EL C 28	EL C 42	EML 42	EML 1"3/8 Z6	EM 65	EM 1"3/8 Z6	EP 65
16001	-	-	-	-	151.0	151.0	160.0
16002	155.5	156.0	159.0	159.0	167.0	167.0	176.0
16003	163.5	164.0	167.0	167.0	-	-	-
16004	169.5	170.0	173.0	173.0	-	-	-

PL 16000 PC - Sonsuz Dişlili Redüktör Adaptörleri (PMRV/PRV) / Worm Gearbox Adaptors (PMRV/PRV) / Anschluss Für Schneckengetriebe (PMRV/PRV) / Predisposizioni Per Riduttori A Vite Senza Fine (PMRV/PRV) / Adaptation Pour Reducteurs A Vis Sans Fin (PMRV/PRV) / Acoplamiento Para Reductores De Tornillo Sin Fin (PMRV/PRV)

PL	PMRV/PRV 050					PMRV/PRV 063					PMRV/PRV 075				
	LM	l	h	MA	G	LM	l	h	MA	G	LM	l	h	MA	G
16001	-					-					-				
16002	338	50	110	60	80	347.5	63	135	72	95	326.5	75	161	86	112.5
16003	399					408.5					387.5				
16004	447					456.5					435.5				

PL	PMRV/PRV 090					PMRV/PRV 110					PMRV/PRV 130				
	LM	l	h	MA	G	LM	l	h	MA	G	LM	l	h	MA	G
16001	-					279	110	237.5	127.5	160	286.5	130	277.5	147.5	180
16002	336.5	90	193	103	129.5	350.5					358				
16003	397.5					-					-				
16004	445.5					-					-				

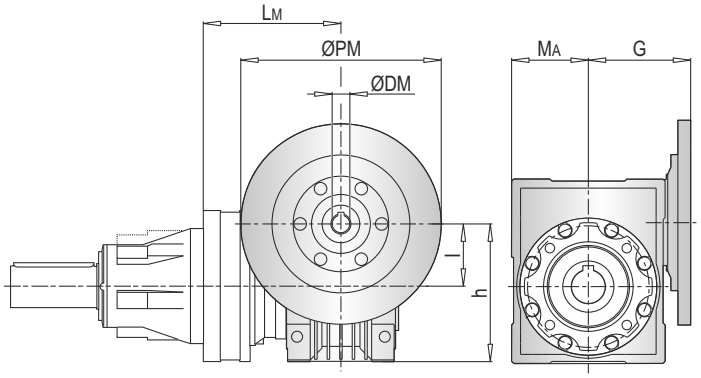

PL	PMRV/PRV ~ Kg					
	050	063	075	090	110	130
16001	-	-	-	-	180	197
16002	158	161.5	164	169	196	213
16003	166	169.5	172	177	-	-
16004	172	175.5	178	183	-	-

ØPM
ØDM
105

PLB 16000 PC - Elektrik Motor Adaptörleri (IEC) / Electric Motor Couplings (IEC) / Anbauvorrichtung Für Elektromotore (IEC) / Predisposizioni Per Motori Elettrici (IEC) / Adaptations Pour Moteurs Electriques (IEC) / Acoplamientos Para Motores Eléctricos (IEC)

PLB	IEC 80				IEC 90				IEC 100				IEC 112				IEC 132			
	A	LT	Z	ØD	A	LT	Z	ØD	A	LT	Z	ØD	A	LT	Z	ØD	A	LT	Z	ØD
16002	229	296	56	200	229	296	56	200	229	306	66	250	229	306	66	250	229	340	100	300
16003	314				314				314				314				314			
16004	348.5	216			348.5	216			348.5	226			348.5	226			348.5	260		

PLB	IEC 160				IEC 180			
	A	LT	Z	ØD	A	LT	Z	ØD
16002	229	379	139	350	229	379	139	350
16003	314				-			
16004	348.5	299			-			

PLB	IEC ~ Kg						
	80	90	100	112	132	160	180
16002	178	178	179	179	183	193	193
16003	197	197	198	198	202	212	-
16004	180	180	181	181	185	195	-

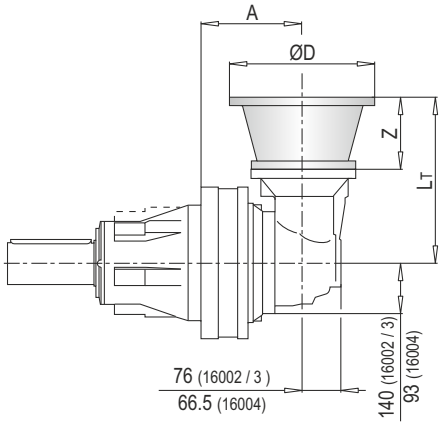

103

PLB 16000 PC - Giriş Milleri / Input Shafts / Antriebswellen / Alberi Entrata / Arbres D'entree / Ejes De Entrada

PLB	EL C 28					EL C 42					EML 42					EML 1"3/8 Z6					EM 65				
	A	LT	Z	L	Ød	A	LT	Z	L	Ød	A	LT	Z	L	Ød	A	LT	Z	L	Ød	A	LT	Z	L	Ød
16002	229	304	64	50	28	229	304	64	82	42	229	334	94	82	42	229	334	94	106	1"3/8	229	377.5	121.5	105	65
16003	314					314					314					314					314				
16004	348.5	224				348.5	224				348.5	254				348.5	254				348.5	297.5			

PLB	EM 1"3/8 Z6					EP 65				
	A	LT	Z	L	Ød	A	LT	Z	L	Ød
16002	229	377.5	121.5	105	1"3/8	229	409	153	105	65
16003	314					314				
16004	348.5	297.5				348.5	329			

PLB	~ Kg						
	EL C 28	EL C 42	EML 42	EML 1"3/8 Z6	EM 65	EM 1"3/8 Z6	EP 65
16002	176.5	177.0	180.0	180.0	188.0	188.0	197.0
16003	195.5	196.0	199.0	199.0	207.0	207.0	216.0
16004	178.5	179.0	182.0	182.0	190.0	190.0	199.0

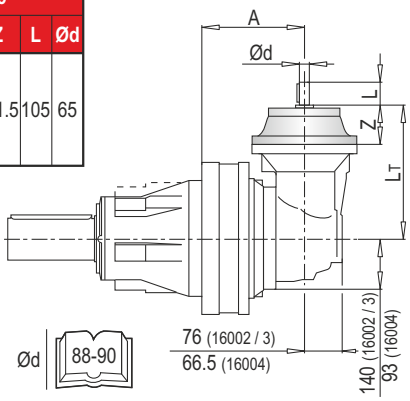

Ød 88-90

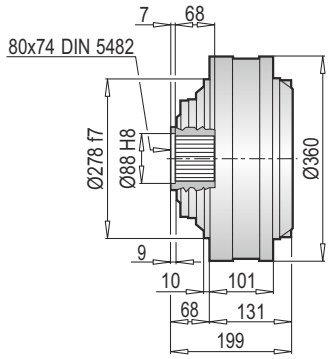

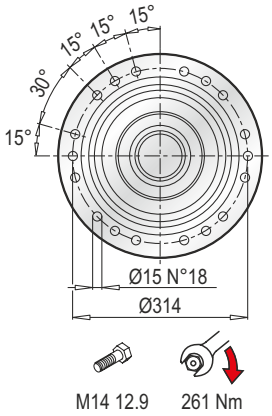

Aksesuarlar
Accessories
Zubehör
Accessori
Accessoires
Accesorios

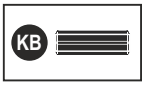

PL 16000 F - Elektrik Motor Adaptörleri (IEC) / Electrıc Motor Couplings (IEC) / Anbauvorrichtung Für Elektromotore (IEC) / Predisposizioni Per Motori Elettrici (IEC) / Adaptations Pour Moteurs Electriques (IEC) / Acoplamientos Para Motores Eléctricos (IEC)

PL	IEC 63			IEC 71			IEC 80			IEC 90			IEC 100			IEC 112		
	LT	Z	ØD	LT	Z	ØD	LT	Z	ØD	LT	Z	ØD	LT	Z	ØD	LT	Z	ØD
16001	-			-			-			-			-			-		
16002	238.5			238.5			258.5			258.5			268.5			268.5		
16003	299.5	36	140	299.5	36	160	319.5	56	200	319.5	56	200	329.5	66	250	329.5	66	250
16004	347.5			347.5			367.5			367.5			377.5			377.5		

PL	IEC 132			IEC 160			IEC 180			IEC 200			IEC 225		
	LT	Z	ØD	LT	Z	ØD	LT	Z	ØD	LT	Z	ØD	LT	Z	ØD
16001	-			249	118	350	249	118	350	279	148	400	279	148	450
16002	302.5			341.5			341.5	139	350	-			-		
16003	363.5	100	300	402.5	139	350	-			-			-		
16004	411.5			450.5			-			-			-		

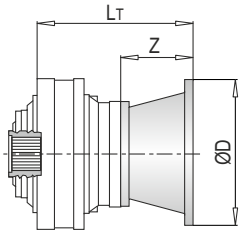

PL	IEC ~ Kg										
	63	71	80	90	100	112	132	160	180	200	225
16001	-	-	-	-	-	-	-	97	97	107	112
16002	96	96	98	98	99	99	103	113	113	-	-
16003	104	104	106	106	107	107	111	121	-	-	-
16004	111	111	113	113	114	114	118	128	-	-	-

PL 16000 F - Giriş Milleri / Input Shafts / Antriebswellen / Alberi Entrata / Arbres D'entree / Ejes De Entrada

PL	EL C 28				EL C 42				EML 42				EML 1"3/8 Z6				EM 65				EM 1"3/8 Z6			
	LT	Z	L	Ød	LT	Z	L	Ød	LT	Z	L	Ød	LT	Z	L	Ød	LT	Z	L	Ød	LT	Z	L	Ød
16001	-				-				-				-				252.5	121.5	105	65	252.5	121.5	105	1"3/8
16002	266.5				266.5				296.5				296.5				337.5				337.5			
16003	327.5	64	50	28	327.5	64	82	42	357.5	94	82	42	357.5	94	106	1"3/8	-				-			
16004	375.5				375.5				405.5				405.5				-				-			

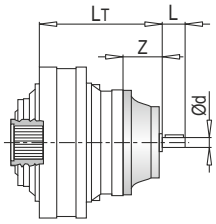

PL	EP 65			
	LT	Z	L	Ød
16001	284	153	105	65
16002	369			
16003	-			
16004	-			

PL	~ Kg						
	EL C 28	EL C 42	EML 42	EML 1"3/8 Z6	EM 65	EM 1"3/8 Z6	EP 65
16001	-	-	-	-	92.0	92.0	101.0
16002	96.5	97.0	100.0	100.0	108.0	108.0	117.0
16003	104.5	105.0	108.0	108.0	-	-	-
16004	111.5	112.0	115.0	115.0	-	-	-

PL 16000 F - Sonsuz Dişlili Redüktör Adaptörleri (PMRV/PRV) / Worm Gearbox Adaptors (PMRV/PRV) / Anschluss Für Schneckengetriebe (PMRV/PRV) / Predisposizioni Per Riduttori A Vite Senza Fine (PMRV/PRV) / Adaptation Pour Reducteurs A Vis Sans Fin (PMRV/PRV) / Acoplamiento Para Reductores De Tornillo Sin Fin (PMRV/PRV)

PL	PMRV/PRV 050					PMRV/PRV 063					PMRV/PRV 075				
	LM	l	h	MA	G	LM	l	h	MA	G	LM	l	h	MA	G
16001	-					-					-				
16002	328	50	110	60	80	337.5	63	135	72	95	316.5	75	161	86	112.5
16003	389					398.5					377.5				
16004	437					446.5					425.5				

PL	PMRV/PRV 090					PMRV/PRV 110					PMRV/PRV 130				
	LM	l	h	MA	G	LM	l	h	MA	G	LM	l	h	MA	G
16001	-					269	110	237.5	127.5	160	276.5	130	277.5	147.5	180
16002	326.5	90	193	103	129.5	354					361.5				
16003	387.5					-					-				
16004	435.5					-					-				

PL	PMRV/PRV ~ Kg					
	050	063	075	090	110	130
16001	-	-	-	-	121	138
16002	99	102.5	105	110	137	154
16003	107	110.5	113	118	-	-
16004	114	117.5	120	125	-	-

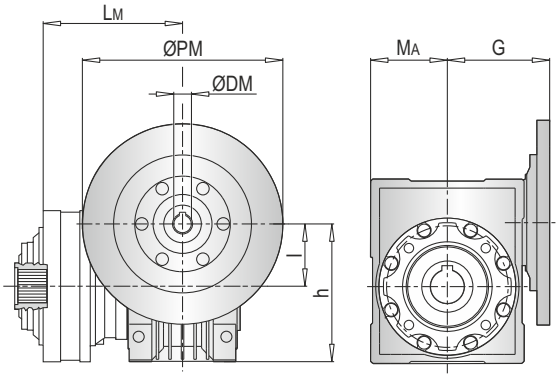

ØPM
ØDM
105

PLB 16000 F - Elektrik Motor Adaptörleri (IEC) / Electric Motor Couplings (IEC) /Anbauvorrichtung Für Elektromotore (IEC) / Predisposizioni Per Motori Elettrici (IEC) / Adaptations Pour Moteurs Electriques (IEC) /Acoplamientos Para Motores Eléctricos (IEC)

PLB	IEC 80				IEC 90				IEC 100				IEC 112				IEC 132			
	A	LT	Z	ØD	A	LT	Z	ØD	A	LT	Z	ØD	A	LT	Z	ØD	A	LT	Z	ØD
16002	219	296	56	200	219	296	56	200	219	306	66	250	219	306	66	250	219	340	100	300
16003	304				304				304				304				304			
16004	338.5	216			338.5	216			338.5	226			338.5	226			338.5	260		

PLB	IEC 160				IEC 180			
	A	LT	Z	ØD	A	LT	Z	ØD
16002	219	379	139	350	219	379	139	350
16003	304				-			
16004	338.5	299			-			

PLB	IEC ~ Kg						
	80	90	100	112	132	160	180
16002	120	120	121	121	125	135	137
16003	139	139	140	140	144	154	-
16004	122	122	123	123	127	137	-

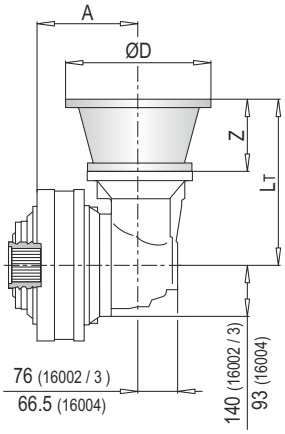

103

PLB 16000 F - Giriş Milleri / Input Shafts / Antriebswellen / Alberi Entrata / Arbres D'entree / Ejes De Entrada

PLB	EL C 28					EL C 42					EML 42					EML 1"3/8 Z6					EM 65				
	A	LT	Z	L	Ød	A	LT	Z	L	Ød	A	LT	Z	L	Ød	A	LT	Z	L	Ød	A	LT	Z	L	Ød
16002	219	304	64	50	28	219	304	64	82	42	219	334	94	82	42	219	334	94	106	1"3/8	219	377.5	121.5	105	65
16003	304					304					304					304					304				
16004	338.5	224				338.5	224				338.5	254				338.5	254				338.5	297.5			

PLB	EM 1"3/8 Z6					EP 65				
	A	LT	Z	L	Ød	A	LT	Z	L	Ød
16002	219	361.5	121.5	105	1"3/8	219	409	153	105	65
16003	304					304				
16004	338.5	297.5				338.5	329			

PLB	~ Kg						
	EL C 28	EL C 42	EML 42	EML 1"3/8 Z6	EM 65	EM 1"3/8 Z6	EP 65
16002	118.5	119.0	122.0	122.0	130.0	130.0	139.0
16003	137.5	138.0	141.0	141.0	149.0	149.0	158.0
16004	120.5	121.0	124.0	124.0	132.0	132.0	141.0

Ød 88-90

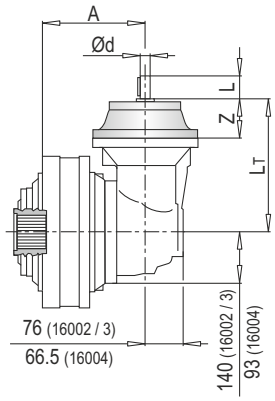

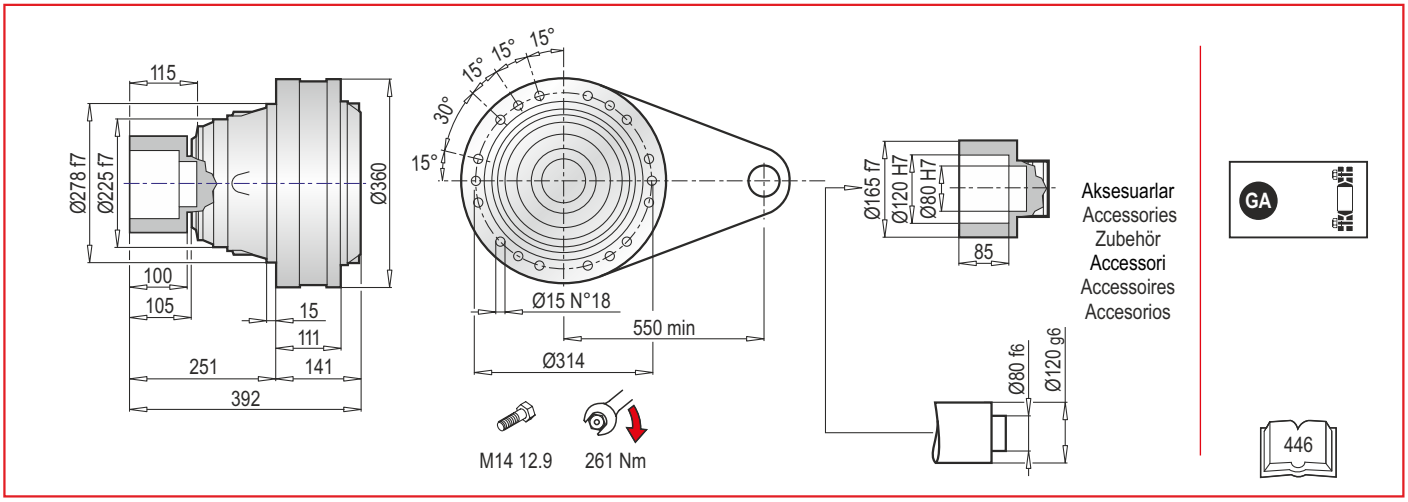

PL 16000 FS - Elektrik Motor Adaptörleri (IEC) / Electric Motor Couplings (IEC) /Anbauvorrichtung Für Elektromotore (IEC) / Predisposizioni Per Motori Elettrici (IEC) / Adaptations Pour Moteurs Electriques (IEC) /Acoplamientos Para Motores Eléctricos (IEC)

PL	IEC 63			IEC 71			IEC 80			IEC 90			IEC 100			IEC 112		
	LT	Z	ØD	LT	Z	ØD	LT	Z	ØD	LT	Z	ØD	LT	Z	ØD	LT	Z	ØD
16001	-			-			-			-			-			-		
16002	248.5	36	140	248.5	36	160	268.5	56	200	268.5	56	200	278.5	66	250	278.5	66	250
16003	309.5			309.5			329.5			329.5			339.5			339.5		
16004	357.5			357.5			377.5			377.5			387.5			387.5		

PL	IEC 132			IEC 160			IEC 180			IEC 200			IEC 225		
	LT	Z	ØD	LT	Z	ØD	LT	Z	ØD	LT	Z	ØD	LT	Z	ØD
16001	-			259	118	350	259	118	350	289	148	400	289	148	450
16002	312.5	100	300	351.5	139	350	351.5	139	350	-			-		
16003	373.5			412.5			-			-			-		
16004	421.5			460.5			-			-			-		

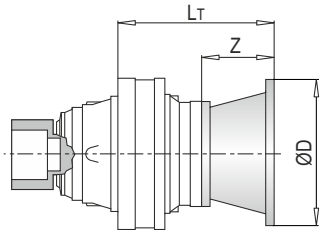

PL	IEC ~ Kg										
	63	71	80	90	100	112	132	160	180	200	225
16001	-	-	-	-	-	-	-	134	134	144	149
16002	133	133	135	135	136	136	140	150	150	-	-
16003	141	141	143	143	144	144	148	158	-	-	-
16004	147	147	149	149	150	150	154	164	-	-	-

PL 16000 FS - Giriş Milleri / Input Shafts / Antriebswellen / Alberi Entrata / Arbres D'entree / Ejes De Entrada

PL	EL C 28				EL C 42				EML 42				EML 1"3/8 Z6				EM 65				EM 1"3/8 Z6			
	LT	Z	L	Ød	LT	Z	L	Ød	LT	Z	L	Ød	LT	Z	L	Ød	LT	Z	L	Ød	LT	Z	L	Ød
16001	-				-				-				-				262.5	121.5	105	65	262.5	121.5	105	1"3/8
16002	276.5	64	50	28	276.5	64	82	42	306.5	94	82	42	306.5	94	106	1"3/8	347.5				347.5			
16003	337.5				337.5				367.5				367.5				-				-			
16004	385.5				385.5				415.5				415.5				-				-			

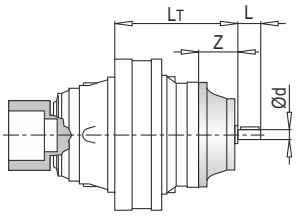

PL	EP 65			
	LT	Z	L	Ød
16001	294	153	105	65
16002	379			
16003	-			
16004	-			

PL	~ Kg						
	EL C 28	EL C 42	EML 42	EML 1"3/8 Z6	EM 65	EM 1"3/8 Z6	EP 65
16001	-	-	-	-	129.0	129.0	138.0
16002	133.5	134.0	137.0	137.0	145.0	145.0	154.0
16003	141.5	142.0	145.0	145.0	-	-	-
16004	147.5	148.0	151.0	151.0	-	-	-

PL 16000 FS - Sonsuz Dişlili Redüktör Adaptörleri (PMRV/PRV) / Worm Gearbox Adaptors (PMRV/PRV) / Anschluss Für Schneckengetriebe (PMRV/PRV) / Predisposizioni Per Riduttori A Vite Senza Fine (PMRV/PRV) / Adaptation Pour Reducteurs A Vis Sans Fin (PMRV/PRV) / Acoplamiento Para Reductores De Tornillo Sin Fin (PMRV/PRV)

PL	PMRV/PRV 050					PMRV/PRV 063					PMRV/PRV 075				
	LM	l	h	MA	G	LM	l	h	MA	G	LM	l	h	MA	G
16001	-					-					-				
16002	338	50	110	60	80	347.5	63	135	72	95	326.5	75	161	86	112.5
16003	399					408.5					387.5				
16004	447					456.5					435.5				

PL	PMRV/PRV 090					PMRV/PRV 110					PMRV/PRV 130				
	LM	l	h	MA	G	LM	l	h	MA	G	LM	l	h	MA	G
16001	-					279	110	237.5	127.5	160	286.5	130	277.5	147.5	180
16002	336.5	90	193	103	129.5	364					371.5				
16003	397.5					-					-				
16004	445.5					-					-				

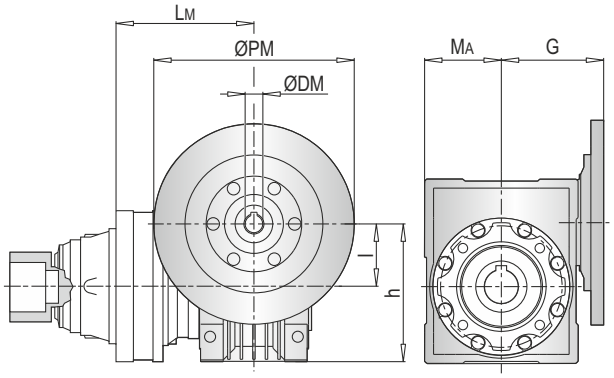

ØPM
ØDM
105

PL	PMRV/PRV ~ Kg					
	050	063	075	090	110	130
16001	-	-	-	-	158	175
16002	136	139.5	142	147	174	191
16003	144	147.5	150	155	-	-
16004	150	153.5	156	161	-	-

PLB 16000 FS - Elektrik Motor Adaptörleri (IEC) / Electric Motor Couplings (IEC) / Anbauvorrichtung Für Elektromotore (IEC) / Predisposizioni Per Motori Elettrici (IEC) / Adaptations Pour Moteurs Electriques (IEC) / Acoplamientos Para Motores Eléctricos (IEC)

PLB	IEC 80				IEC 90				IEC 100				IEC 112				IEC 132			
	A	LT	Z	ØD	A	LT	Z	ØD	A	LT	Z	ØD	A	LT	Z	ØD	A	LT	Z	ØD
16002	229	296	56	200	229	296	56	200	229	306	66	250	229	306	66	250	229	340	100	300
16003	314				314				314				314				314			
16004	348.5	216			348.5	216			348.5	226			348.5	226			348.5	260		

PLB	IEC 160				IEC 180			
	A	LT	Z	ØD	A	LT	Z	ØD
16002	229	379	139	350	229	379	139	350
16003	314				-			
16004	348.5	229			-			

PLB	IEC ~ Kg						
	80	90	100	112	132	160	180
16002	156	156	157	157	161	171	171
16003	175	175	176	176	180	190	-
16004	158	158	159	159	163	173	-

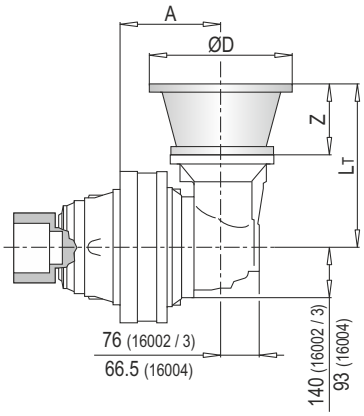

103

PLB 16000 FS - Giriş Milleri / Input Shafts / Antriebswellen / Alberi Entrata / Arbres D'entree / Ejes De Entrada

PLB	EL C 28					EL C 42					EML 42					EML 1"3/8 Z6					EM 65				
	A	LT	Z	L	Ød	A	LT	Z	L	Ød	A	LT	Z	L	Ød	A	LT	Z	L	Ød	A	LT	Z	L	Ød
16002	229	304	64	50	28	229	304	64	82	42	229	334	94	82	42	229	334	94	106	1"3/8	229	377.5	121.5	105	65
16003	314					314					314					314					314				
16004	348.5	224				348.5	224				348.5	254				348.5	254				348.5	297.5			

PLB	EM 1"3/8 Z6					EP 65				
	A	LT	Z	L	Ød	A	LT	Z	L	Ød
16002	229	377.5	121.5	105	1"3/8	229	409	153	105	65
16003	314					314				
16004	348.5	297.5				348.5	329			

PLB	~ Kg						
	EL C 28	EL C 42	EML 42	EML 1"3/8 Z6	EM 65	EM 1"3/8 Z6	EP 65
16002	154.5	155.0	158.0	158.0	166.0	166.0	175.0
16003	173.5	174.0	177.0	177.0	185.0	185.0	194.0
16004	156.5	157.0	160.0	160.0	168.0	168.0	177.0

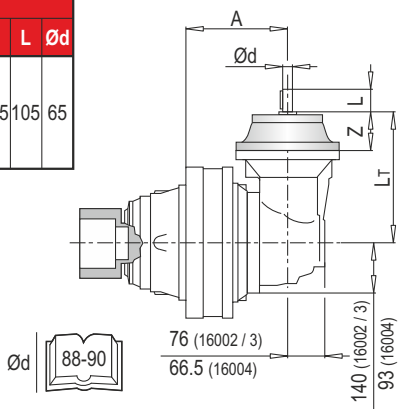

Ød 88-90

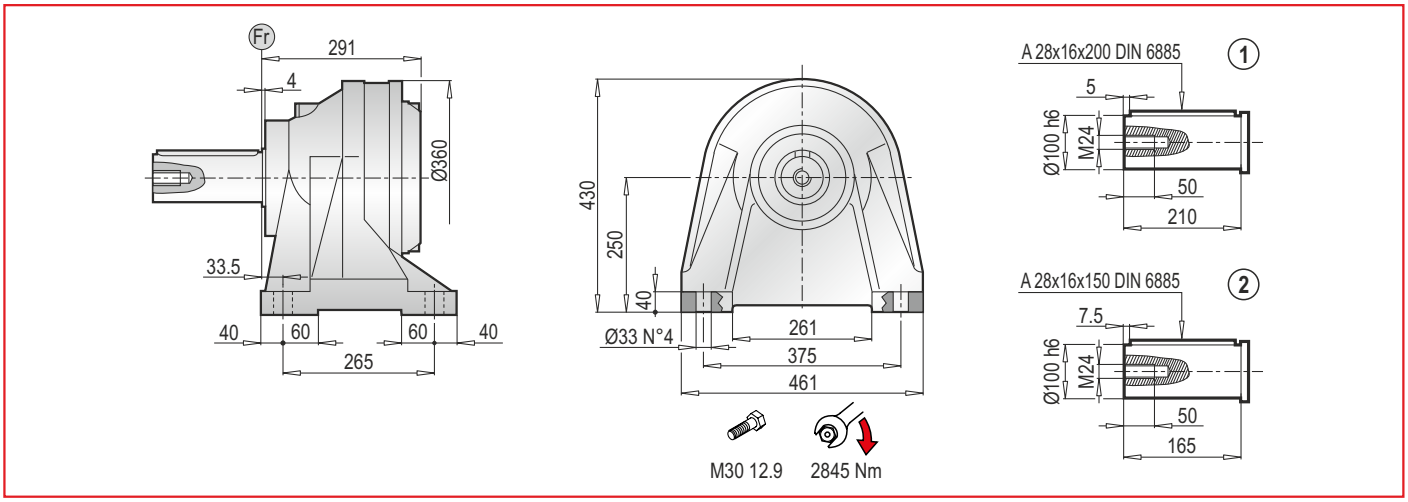

PL 16000 CPC - Elektrik Motor Adaptörleri (IEC) / Electrıc Motor Couplings (IEC) / Anbauvorrichtung Für Elektromotore (IEC) / Predisposizioni Per Motori Elettrici (IEC) / Adaptations Pour Moteurs Electriques (IEC) / Acoplamientos Para Motores Eléctricos (IEC)

PL	IEC 63			IEC 71			IEC 80			IEC 90			IEC 100			IEC 112		
	LT	Z	Ød	LT	Z	Ød	LT	Z	Ød	LT	Z	Ød	LT	Z	Ød	LT	Z	Ød
16001	-			-			-			-			-			-		
16002	398.5			398.5			418.5			418.5			428.5			428.5		
16003	459.5	36	140	459.5	36	160	479.5	56	200	479.5	56	200	489.5	66	250	489.5	66	250
16004	507.5			507.5			527.5			527.5			537.5			537.5		

PL	IEC 132			IEC 160			IEC 180			IEC 200			IEC 225		
	LT	Z	Ød	LT	Z	Ød	LT	Z	Ød	LT	Z	Ød	LT	Z	Ød
16001	-			409	118	350	409	118	350	439	148	400	439	148	450
16002	462.5			501.5			501.5	139	350	-			-		
16003	523.5	100	300	562.5	139	350	-			-			-		
16004	571.5			610.5			-			-			-		

PL	IEC ~ Kg										
	63	71	80	90	100	112	132	160	180	200	225
16001	-	-	-	-	-	-	-	179	179	189	194
16002	178	178	180	180	181	181	185	195	195	-	-
16003	186	186	188	188	189	189	193	203	-	-	-
16004	192	192	194	194	195	195	199	209	-	-	-

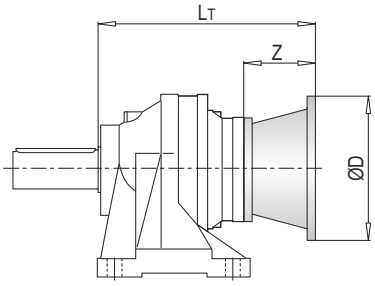

PL 16000 CPC - Giriş Milleri / Input Shafts / Antriebswellen / Alberi Entrata / Arbres D'entree / Ejes De Entrada

PL	EL C 28				EL C 42				EML 42				EML 1"3/8 Z6				EM 65				EM 1"3/8 Z6			
	LT	Z	L	Ød	LT	Z	L	Ød	LT	Z	L	Ød	LT	Z	L	Ød	LT	Z	L	Ød	LT	Z	L	Ød
16001	-				-				-				-				412.5	121.5	105	65	412.5	121.5	105	1"3/8
16002	426.5				426.5				456.5				456.5				497.5				497.5			
16003	487.5	64	50	28	487.5	64	82	42	517.5	94	82	42	517.5	94	106	1"3/8	-				-			
16004	535.5				535.5				565.5				565.5				-				-			

PL	EP 65			
	LT	Z	L	Ød
16001	444	153	105	65
16002	529			
16003	-			
16004	-			

PL	~ Kg						
	EL C 28	EL C 42	EML 42	EML 1"3/8 Z6	EM 65	EM 1"3/8 Z6	EP 65
16001	-	-	-	-	174.0	174.0	183.0
16002	178.5	179.0	182.0	182.0	190.0	190.0	199.0
16003	186.5	187.0	190.0	190.0	-	-	-
16004	192.5	193.0	196.0	196.0	-	-	-

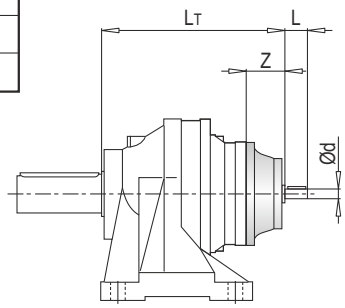

PL 16000 CPC - Sonsuz Dişlili Redüktör Adaptörleri (PMRV/PRV) / Worm Gearbox Adaptors (PMRV/PRV) / Anschluss Für Schneckengetriebe (PMRV/PRV) / Predisposizioni Per Riduttori A Vite Senza Fine (PMRV/PRV) / Adaptation Pour Reducteurs A Vis Sans Fin (PMRV/PRV) / Acoplamiento Para Reductores De Tornillo Sin Fin (PMRV/PRV)

PL	PMRV/PRV 050					PMRV/PRV 063					PMRV/PRV 075				
	LM	l	h	MA	G	LM	l	h	MA	G	LM	l	h	MA	G
16001	-					-					-				
16002	488	50	110	60	80	497.5	63	135	72	95	476.5	75	161	86	112.5
16003	549					558.5					537.5				
16004	597					606.5					585.5				

PL	PMRV/PRV 090					PMRV/PRV 110					PMRV/PRV 130				
	LM	l	h	MA	G	LM	l	h	MA	G	LM	l	h	MA	G
16001	-					429	110	237.5	127.5	160	436.5	130	277.5	147.5	180
16002	486.5	90	193	103	129.5	514					521.5				
16003	547.5					-					-				
16004	595.5					-					-				

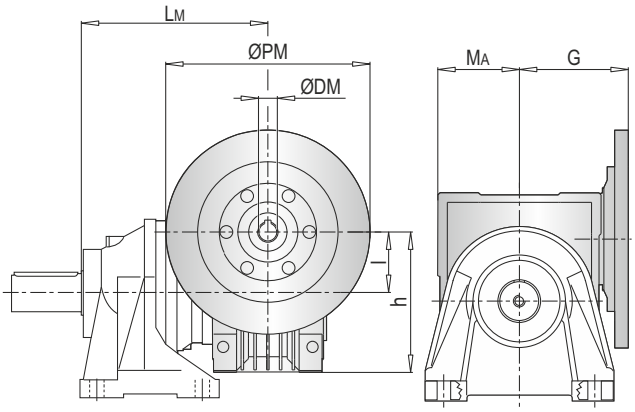

PL	PMRV/PRV ~ Kg					
	050	063	075	090	110	130
16001	-	-	-	-	203	220
16002	181	184.5	187	192	219	236
16003	189	192.5	195	200	-	-
16004	195	198.5	201	206	-	-

PLB 16000 CPC - Elektrik Motor Adaptörleri (IEC) / Electric Motor Couplings (IEC) / Anbauvorrichtung Für Elektromotore (IEC) / Predisposizioni Per Motori Elettrici (IEC) / Adaptations Pour Moteurs Electriques (IEC) / Acoplamientos Para Motores Eléctricos (IEC)

PLB	IEC 80				IEC 90				IEC 100				IEC 112				IEC 132			
	A	LT	Z	ØD	A	LT	Z	ØD	A	LT	Z	ØD	A	LT	Z	ØD	A	LT	Z	ØD
16002	379	296	56	200	379	296	56	200	379	306	66	250	379	306	66	250	379	340	100	300
16003	464				464				464				464				464			
16004	498.5	216			498.5	216			498.5	226			498.5	226			498.5	260		

PLB	IEC 160				IEC 180			
	A	LT	Z	ØD	A	LT	Z	ØD
16002	379	379	139	350	379	379	139	350
16003	464				-			
16004	498.5	299			-			

PLB	IEC ~ Kg						
	80	90	100	112	132	160	180
16002	201	201	202	202	206	216	216
16003	220	220	221	221	225	235	-
16004	203	203	204	204	208	218	-

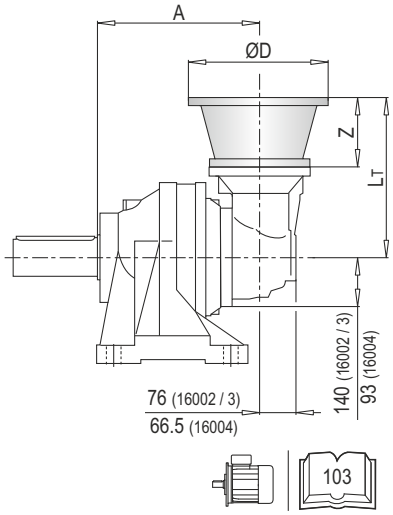

PLB 16000 CPC - Giriş Milleri / Input Shafts / Antriebswellen / Alberi Entrata / Arbres D'entree / Ejes De Entrada

PLB	EL C 28					EL C 42					EML 42					EML 1"3/8 Z6					EM 65				
	A	LT	Z	L	Ød	A	LT	Z	L	Ød	A	LT	Z	L	Ød	A	LT	Z	L	Ød	A	LT	Z	L	Ød
16002	379	304	64	50	28	379	304	64	82	42	379	334	94	82	42	379	334	94	106	1"3/8	379	377.5	121.5	105	65
16003	464					464					464					464					464				
16004	498.5	224				498.5	224				498.5	254				498.5	254				498.5	281.5			

PLB	EM 1"3/8 Z6					EP 65				
	A	LT	Z	L	Ød	A	LT	Z	L	Ød
16002	379	377.5	121.5	105	1"3/8	379	409	153	105	65
16003	464					464				
16004	498.5	281.5				498.5	313			

PLB	~ Kg						
	EL C 28	EL C 42	EML 42	EML 1"3/8 Z6	EM 65	EM 1"3/8 Z6	EP 65
16002	199.5	200.0	203.0	203.0	211.0	211.0	220.0
16003	218.5	219.0	222.0	222.0	230.0	230.0	239.0
16004	201.5	202.0	205.0	205.0	213.0	213.0	222.0

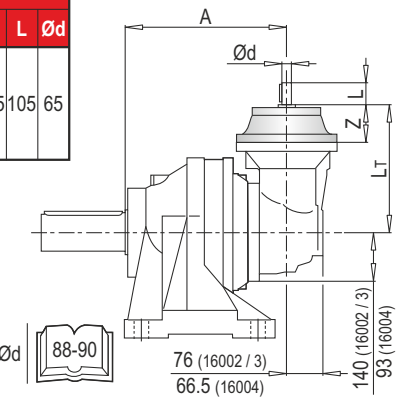

AKSESUARLAR / ACCESSORIES / ZUBEHÖR / ACCESSORI / ACCESSOIRES / ACCESORIOS

YZ
Pinyon / Pinion / Ritzel
Pignoni / Piñones

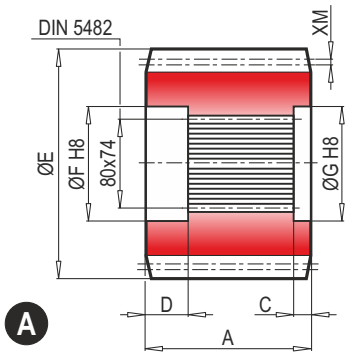

A

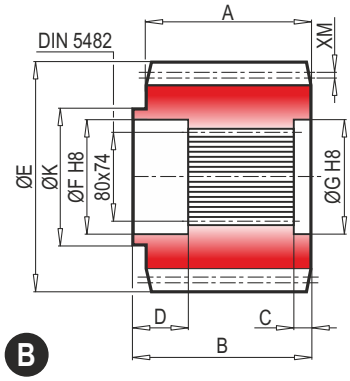

B

	Çıkış tipi Output type Abtriebs-version Versione Version Versión	M	Z	XM	A	B	C	D	E	F	G	K	Malzeme Material Material Materiale Matière Material	Kod Code Bestell-Nr. Codice Code Código
A	M	10	12	0	90	-	10	31	140	85	80	-	38NiCrMo4	1071.236.042
	M	10	14	0	90	-	10	31	160	85	80	-	38NiCrMo4	1071.238.042
	P	14	13	7	122	-	24	33	224	105	105	-	18NiCrMo5	1071.293.042
B	M	12	14	3	90	115	25	31	194.5	85	80	130	39NiCrMo3	1071.286.042

FF
Sabitleme rondelası / Stop bottom plate / Endscheibe /
Fondello di arresto / Bouchon de fermeture / Tapón de detención

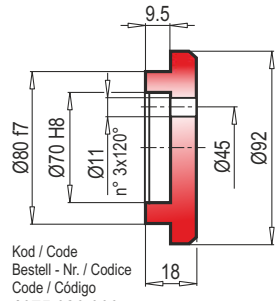

Kod / Code
Bestell - Nr. / Codice
Code / Código
1075.030.000

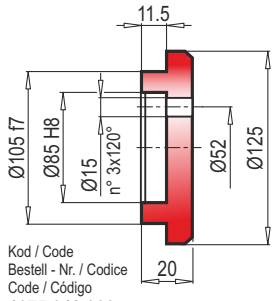

Kod / Code
Bestell - Nr. / Codice
Code / Código
1075.042.000

BS
Spline kaplin / Splined bushing / Innenverzahnte Buchse /
Boccola scanalata / Moyeu cannelé / Casquillo ranurado

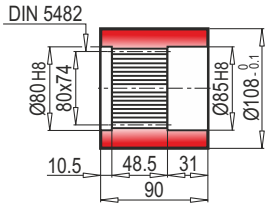

Malzeme / Material
Material / Materiale
Matière / Material

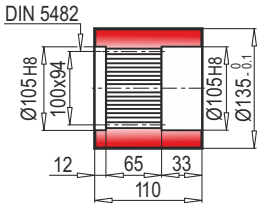

MS
Kod / Code
Bestell - Nr. / Codice
Code / Código
6171.103.076

UNI C40
SAE 1040
DIN Ck40

PS
Kod / Code
Bestell - Nr. / Codice
Code / Código
8171.112.041

KB
Spline mil / Splined rod / Außenverzahnte Welle /
Barra scanalata / Arbre cannelé / Barra ranurada

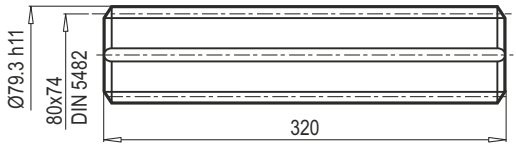

Malzeme / Material
Material / Materiale
Matière / Material

UNI 39NiCrMo3
Sertleşmiş ve tavlanmış / Hardened and tempered
Vergütet / Bonifié
Bonificado / Endurecido e temperado

Kod / Code
Bestell - Nr. / Codice
Code / Código
3071.406.042

FL
Flanş / Flange / Flansch
Flangia / Bride / Brida

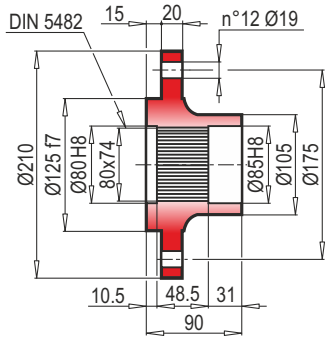

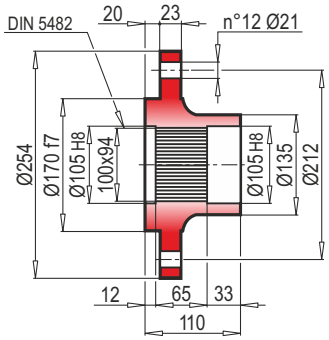

MS
Kod / Code
Bestell - Nr. / Codice
Code / Código
6171.105.098

PS
Kod / Code
Bestell - Nr. / Codice
Code / Código
8171.104.098

GA
Konik sıktırma / Shrink disc / Schrumpfscheibe /
Giunto di attrito / Frette de serrage / Disco de contracción

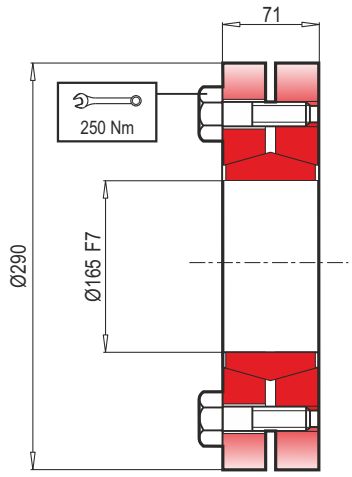

Max. Drehmoment
Max. torque
Maksimum moment
Coppia max.
Couple max.
Momento máx.
35 kNm

Bestell - Nr. / Code
Kod / Codice
Code / Código
5109.165.000

TR RADYAL YÜKLER (Fr)

Aşağıdaki grafikler istenilen $n_2$xh değerinin elde edilmesi için gerekli olan radyal yükleri ve K faktörlerini göstermektedir.

EN RADIAL LOADS (Fr)

The following curves show the radial loads and the K factors to obtain the required n2xh value.

DE RADIALLAST (Fr)

In den nachstehenden Diagrammen ist die Radiallast un der Koeffizient K dargestellt und kann mit dem gewünschten Wert $n_2$xh verglichen werden.

IT CARICHI RADIALI (Fr)

Nei diagrammi seguenti sono riportati i carichi radiali ei coefficienti K per rapportarli al valore $n_2$xh desiderato.

FR CHARGES RADIALES (Fr)

Dans les diagrammes suivants sont indiqués les charges radiales et les facteurs K de façon à obtenir la valeur $n_2$xh désirée.

ES CARGAS RADIALES (Fr)

En los siguientes diagramas se indican las cargas radiales y los coefici - entes K para obtener el valor requerido $n_2$xh.

M - CPC*

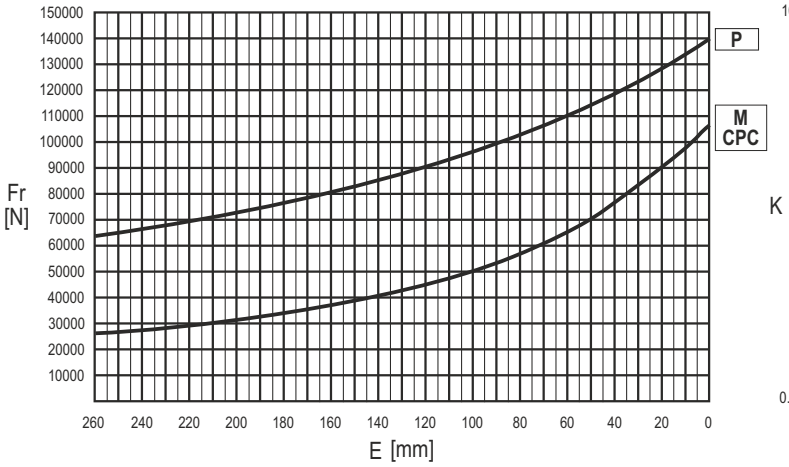

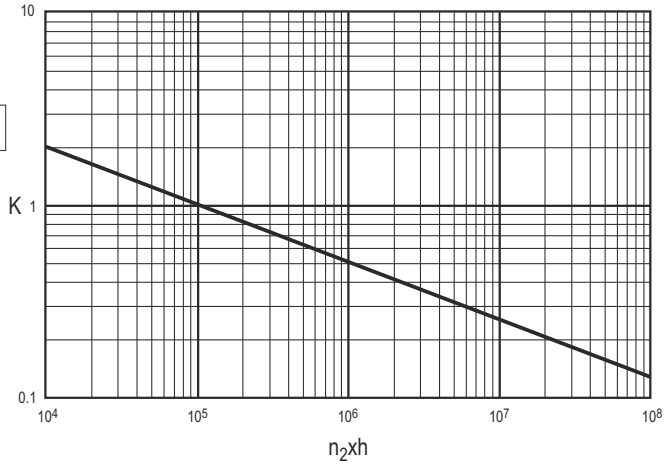

	n x h				
	10^5	10^4	10^6	10^7	10^8
M	Fr	Fr • K			
CPC*	Fr • 0.75	Fr • K • 0.75			

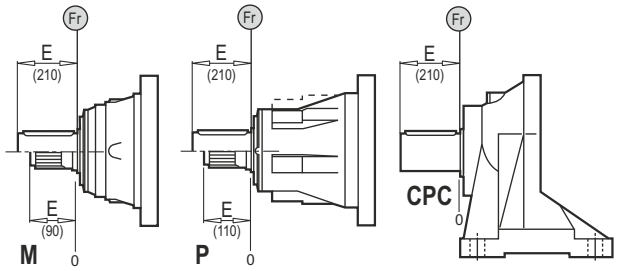

TR EKSENEL YÜKLER (Fa)

Tabloda yer alan eksenel yük değerleri, çıkış tipine ve uygulamanın yük yönüne göre değişir.

EN AXIAL LOADS (Fa)

The values of the axial loads in the table refer to the output versions and load direction of application.

DE AXIALLAST (Fa)

Die dargestellten Werte der Axiallast basieren auf der Version und der applizierten Lastrichtung.

IT CARICHI ASSIALI (Fa)

I valori dei carichi assiali indicati in tabella sono riferiti alle versioni e alla direzione di applicazione del carico.

FR CHARGES AXIALES (Fa)

Les valeurs des charges axiales indiquées dans le tableau se réfèrent aux versions et à la direction d'application de lacharge.

ES CARGAS AXIALES (Fa)

Los valores de las cargas axiales indicados en la tabla se refieren a las versiones y a la dirección de aplicación de la carga.

Fa [N]	M - CPC	P	
	45000	85000	←
	65000	85000	→

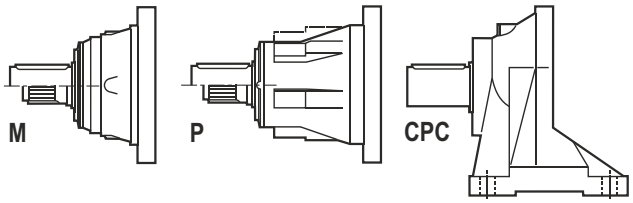

TEKNİK VERİLER / TECHNICAL DATA / TECHNISCHE DATEN / DATI TECNICI / DONNÉES TECHNIQUES / DATOS TÉCNICAS

	i_{ges}	M_2max (n1: 1400rpm) (Nm)
18002	13.0 ... 30.0	9740
18003	53.8 ... 180.2	13600
18004	348.6 ... 1216.4	19300

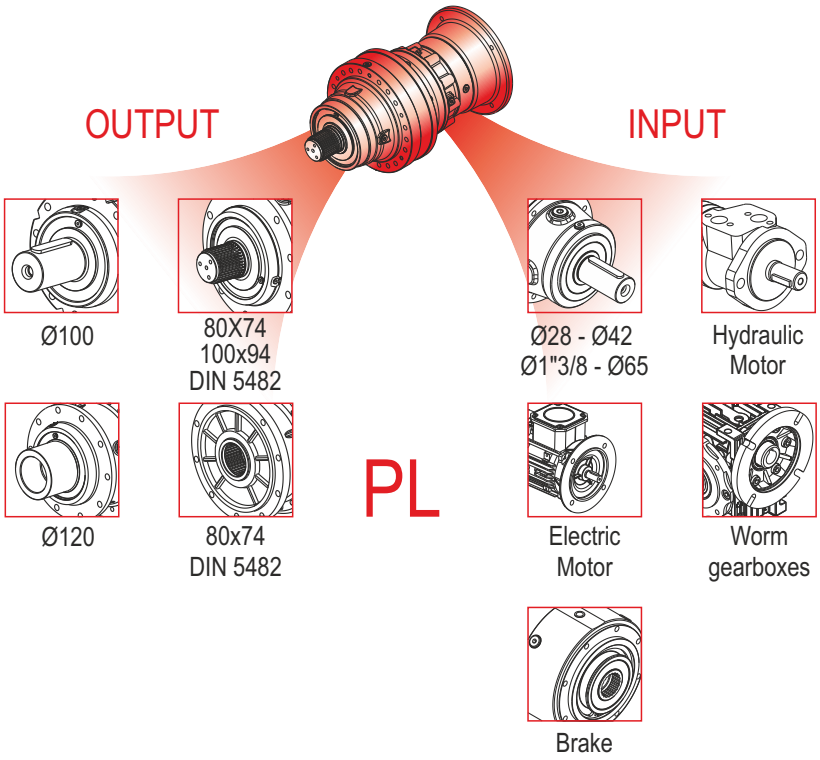

	i_{ges}	M_2max (n1: 1400rpm) (Nm)
18002	10.9 ... 20.0	9830
18003	54.4 ... 163.3	14150
18004	185.8 ... 981.2	18010

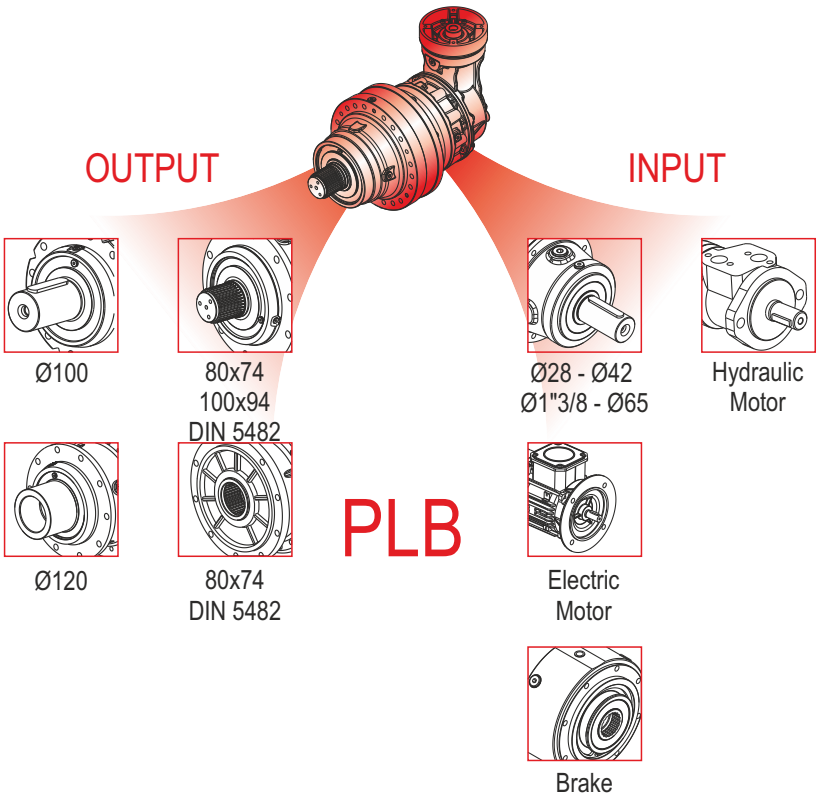

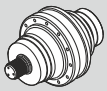	Pt [kW]	n_{1max} [min^{-1}]	i_{ges}	Mc [kNm]				Giriş- Input - Antrieb - Entrata - Entrée - Entrada		
				n_2 x h	n_2 x h	n_2 x h	n_2 x h			
				10.000	20.000	50.000	100.000	IEC (B5)	PMRV / PRV	EL - EML EM - EP - ET
PL 18002	25	2800	13.0 15.7 19.0 21.4 24.9 30.0	20.77 20.77 18.09 18.09 18.09 18.09	18.38 18.38 16.01 16.01 16.01 16.01	15.64 15.64 13.63 13.63 13.63 13.63	13.84 13.84 12.07 12.07 12.07 12.07	160 180	110 130	EM 65 EM 1"3/8 Z6 EP 65
PL 18003	17	2800	53.8 65.0 73.3 81.4 94.5 106.7 128.4 149.1 180.2	20.77 20.77 20.77 20.77 20.77 20.77 18.09 18.09 18.09	18.38 18.38 18.38 18.38 18.38 18.38 16.01 16.01 16.01	15.64 15.64 15.64 15.64 15.64 15.64 13.63 13.63 13.63	13.84 13.84 13.84 13.84 13.84 13.84 12.07 12.07 12.07	63 71 80 90 100 112 132 160	050 063 075 090 110 130	EL C 28 EL C 42 EML 42 EML 1"3/8 Z6 EM 65 EM 1"3/8 Z6 EP 65
PL 18004	13	2800	348.6 377.2 438.4 489.2 549.1 620.0 677.9 720.0 770.5 818.8 849.8 928.8 987.4 1113.0 1216.4	20.77 20.77 20.77 20.77 20.77 20.77 20.77 20.77 20.77 20.77 18.09 18.09 18.09 18.09 18.09	18.38 18.38 18.38 18.38 18.38 18.38 18.38 18.38 18.38 18.38 16.01 16.01 16.01 16.01 16.01	15.64 15.64 15.64 15.64 15.64 15.64 15.64 15.64 15.64 15.64 13.63 13.63 13.63 13.63 13.63	13.84 13.84 13.84 13.84 13.84 13.84 13.84 13.84 13.84 13.84 12.07 12.07 12.07 12.07 12.07	63 71 80 90 100 112 132 160	050 063 075 090	EL C 28 EL C 42 EML 42 EML 1"3/8 Z6

	Pt [kW]	n_{1max} [min^{-1}]	i_{ges}	Mc [kNm]				Giriş- Input - Antrieb - Entrata - Entrée - Entrada	
				n_2 x h	n_2 x h	n_2 x h	n_2 x h		
				10.000	20.000	50.000	100.000	IEC (B5)	EL - EML EM - EP - ET
PLB 18002	25	2000	10.9 13.2 16.6 20.0	20.77 18.09 20.77 18.09	18.38 16.01 18.38 16.01	15.64 13.63 15.64 13.63	13.84 12.07 13.84 12.07	160 180	EM 65 EM 1"3/8 Z6 EP 65
PLB 18003	17	2800	54.4 71.2 85.7 103.3 116.7 135.5 163.3	20.77 20.77 20.77 18.09 18.09 20.77 18.09	18.38 18.38 18.38 16.01 16.01 18.38 16.01	15.64 15.64 15.64 13.63 13.63 15.64 13.63	13.84 13.84 13.84 12.07 12.07 13.84 12.07	80 90 100 112 132 160	EL C 28 EL C 42 EML 42 EML 1"3/8 Z6 EM 65 EM 1"3/8 Z6 EP 65
PLB 18004	13	2800	185.8 224.4 281.0 323.8 353.6 394.3 442.9 500.1 558.2 580.7 622.5 699.2 749.1 812.0 981.2	20.77 20.77 20.77 20.77 20.77 20.77 20.77 20.77 18.09 20.77 18.09 18.09 18.09 18.09 18.09	18.38 18.38 18.38 18.38 18.38 18.38 18.38 18.38 16.01 18.38 16.01 16.01 16.01 16.01 16.01	15.64 15.64 15.64 15.64 15.64 15.64 15.64 15.64 13.63 15.64 13.63 13.63 13.63 13.63 13.63	13.84 13.84 13.84 13.84 13.84 13.84 13.84 13.84 12.07 13.84 12.07 12.07 12.07 12.07 12.07	80 90 100 112 132 160	EL C 28 EL C 42 EML 42 EML 1"3/8 Z6 EM 65 EM 1"3/8 Z6 EP 65

(n_2 x h = 20.000)

$M_{max} = M_C \times 2$

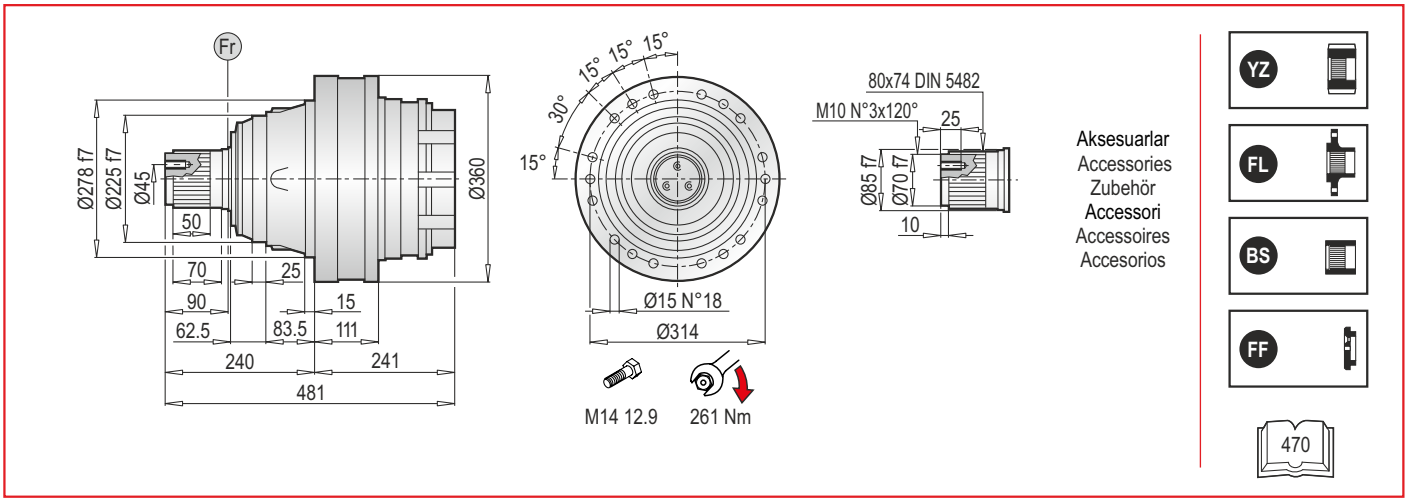

PL 18000 MS - Elektrik Motor Adaptörleri (IEC) / Electric Motor Couplings (IEC) / Anbauvorrichtung Für Elektromotore (IEC) / Predisposizioni Per Motori Elettrici (IEC) / Adaptations Pour Moteurs Electriques (IEC) / Acoplamientos Para Motores Eléctricos (IEC)

PL	IEC 63			IEC 71			IEC 80			IEC 90			IEC 100		
	LT	Z	ØD	LT	Z	ØD	LT	Z	ØD	LT	Z	ØD	LT	Z	ØD
18002	-			-			-			-			-		
18003	336.5	36	140	336.5	36	160	356.5	56	200	356.5	56	200	366.5	66	250
18004	384.5			384.5			404.5			404.5			414.5		

PL	IEC 112			IEC 132			IEC 160			IEC 180		
	LT	Z	ØD	LT	Z	ØD	LT	Z	ØD	LT	Z	ØD
18002	-			-			359	118	350	359	118	350
18003	366.5	66	250	400.5	100	300	439.5	139	350	-		
18004	414.5			448.5			487.5			-		

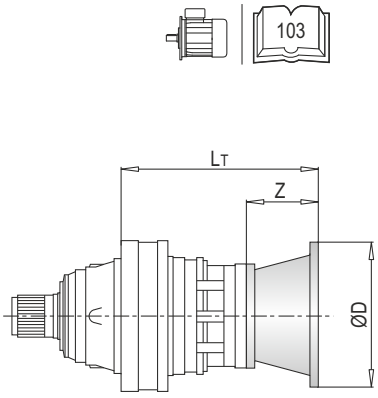

PL	IEC ~ Kg								
	63	71	80	90	100	112	132	160	180
18002	-	-	-	-	-	-	-	154	154
18003	149	149	151	151	152	152	156	166	-
18004	156	156	158	158	159	159	163	173	-

PL 18000 MS - Giriş Milleri / Input Shafts / Antriebswellen / Alberi Entrata / Arbres D'entree / Ejes De Entrada

PL	EL C 28				EL C 42				EML 42				EML 1"3/8 Z6				EM 65				EM 1"3/8 Z6			
	LT	Z	L	Ød	LT	Z	L	Ød	LT	Z	L	Ød	LT	Z	L	Ød	LT	Z	L	Ød	LT	Z	L	Ød
18002	-				-				-				-				362.5	121.5	105	65	362.5	121.5	105	1"3/8
18003	364.5	64	50	28	364.5	64	82	42	394.5	94	82	42	394.5	94	106	1"3/8	422				422			
18004	412.5				412.5				442.5				442.5				-				-			

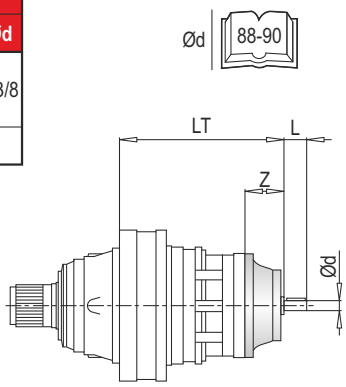

PL	EP 65			
	LT	Z	L	Ød
18002	394	153	105	65
18003	453.5			
18004	-			

PL	~ Kg						
	EL C 28	EL C 42	EML 42	EML 1"3/8 Z6	EM 65	EM 1"3/8 Z6	EP 65
18002	-	-	-	-	149.0	149.0	158.0
18003	149.5	150.0	153.0	153.0	161.0	161.0	170.0
18004	156.5	157.0	160.0	160.0	-	-	-

PL 18000 MS - Sonsuz Dişlili Redüktör Adaptörleri (PMRV/PRV) / Worm Gearbox Adaptors (PMRV/PRV) / Anschluss Für Schneckengetriebe (PMRV/PRV) / Predisposizioni Per Riduttori A Vite Senza Fine (PMRV/PRV) / Adaptation Pour Reducteurs A Vis Sans Fin (PMRV/PRV) / Acoplamiento Para Reductores De Tornillo Sin Fin (PMRV/PRV)

PL	PMRV/PRV 050					PMRV/PRV 063					PMRV/PRV 075				
	LM	l	h	MA	G	LM	l	h	MA	G	LM	l	h	MA	G
18002	-					-					-				
18003	422	50	110	60	80	431.5	63	135	72	95	410.5	75	161	86	112.5
18004	470					479.5					458.5				

PL	PMRV/PRV 090					PMRV/PRV 110					PMRV/PRV 130				
	LM	l	h	MA	G	LM	l	h	MA	G	LM	l	h	MA	G
18002	-					375	110	237.5	127.5	160	380.5	130	277.5	147.5	180
18003	420.5	90	193	103	129.5	434.5					440				
18004	468.5					-					-				

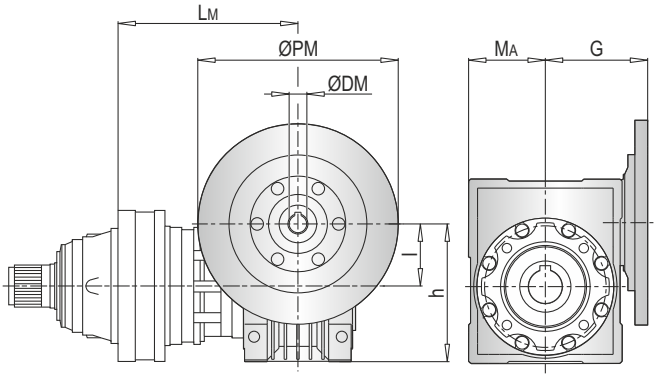

ØPM
ØDM
105

PL	PMRV/PRV ~ Kg					
	050	063	075	090	110	130
18002	-	-	-	-	178	195
18003	152	155.5	158	163	190	207
18004	159	162.5	165	170	-	-

PLB 18000 MS - Elektrik Motor Adaptörleri (IEC) / Electric Motor Couplings (IEC) / Anbauvorrichtung Für Elektromotore (IEC) / Predisposizioni Per Motori Elettrici (IEC) / Adaptations Pour Moteurs Electriques (IEC) / Acoplamientos Para Motores Eléctricos (IEC)

PLB	IEC 80				IEC 90				IEC 100				IEC 112				IEC 132			
	A	LT	Z	ØD	A	LT	Z	ØD	A	LT	Z	ØD	A	LT	Z	ØD	A	LT	Z	ØD
18002	-				-				-				-				-			
18003	329	296	56	200	329	296	56	200	329	306	66	250	329	306	66	250	329	340	100	300
18004	402				402				402				402				402			

PLB	IEC 160				IEC 180			
	A	LT	Z	ØD	A	LT	Z	ØD
18002	276	433	118	350	276	433	118	350
18003	329	379	139		-			
18004	402				-			

PLB	IEC ~ Kg						
	80	90	100	112	132	160	180
18002	-	-	-	-	-	221	221
18003	176	176	177	177	181	191	-
18004	178	178	179	179	183	193	-

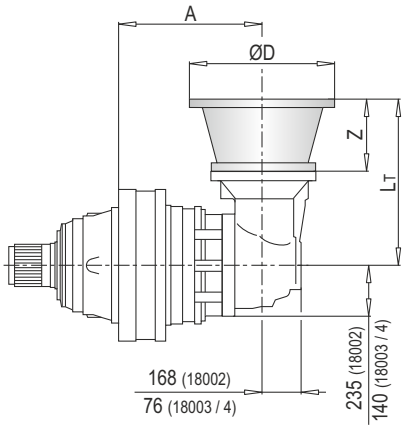

103

PLB 18000 MS - Giriş Milleri / Input Shafts / Antriebswellen / Alberi Entrata / Arbres D'entree / Ejes De Entrada

PLB	EL C 28					EL C 42					EML 42					EML 1"3/8 Z6					EM 65				
	A	LT	Z	L	Ød	A	LT	Z	L	Ød	A	LT	Z	L	Ød	A	LT	Z	L	Ød	A	LT	Z	L	Ød
18002	-					-					-					-					276	436.5	121.5	105	65
18003	329	304	64	50	28	329	304	64	82	42	329	334	94	82	42	329	334	94	106	1"3/8	329	361.5			
18004	402					402					402					402					402				

PLB	EM 1"3/8 Z6					EP 65				
	A	LT	Z	L	Ød	A	LT	Z	L	Ød
18002	276	436.5	121.5	105	1"3/8	276	468	153	105	65
18003	329	361.5				329	393			
18004	402					402				

PLB	~ Kg						
	EL C 28	EL C 42	EML 42	EML 1"3/8 Z6	EM 65	EM 1"3/8 Z6	EP 65
18002	-	-	-	-	216.0	216.0	225.0
18003	174.5	175.0	178.0	178.0	186.0	186.0	195.0
18004	176.5	177.0	180.0	180.0	188.0	188.0	197.0

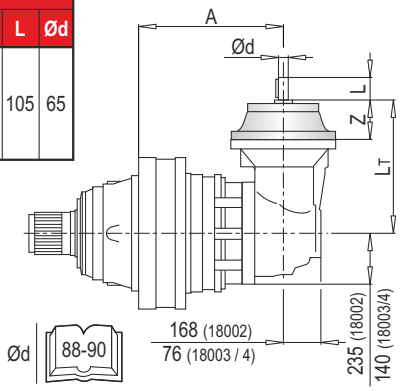

Ød 88-90

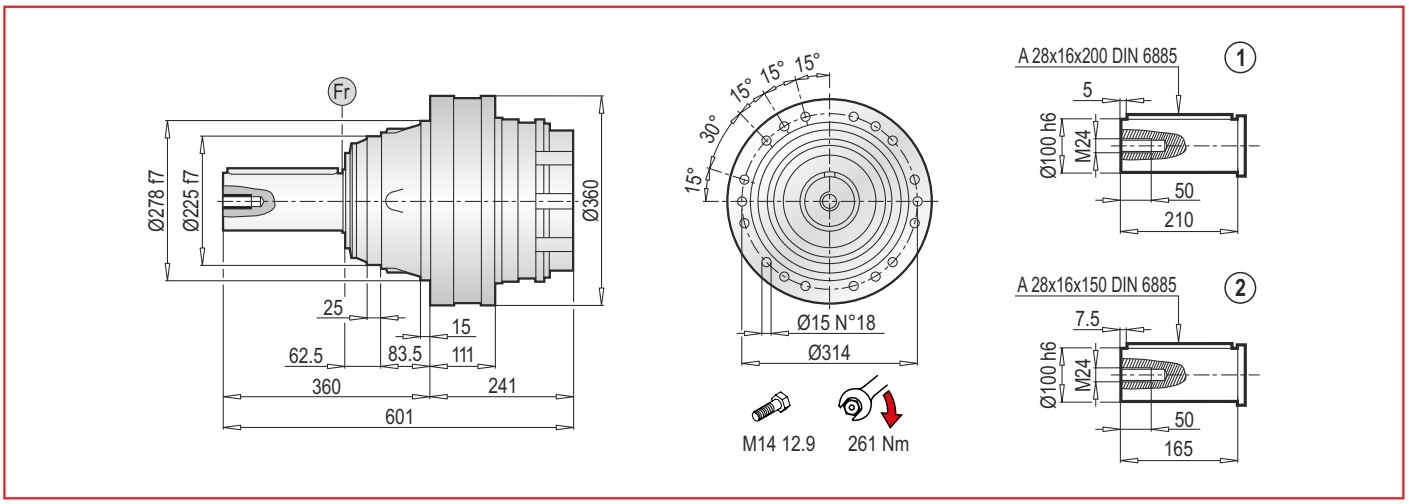

PL 18000 MC - Elektrik Motor Adaptörleri (IEC) / Electrıc Motor Couplings (IEC) / Anbauvorrichtung Für Elektromotore (IEC) / Predisposizioni Per Motori Elettrici (IEC) / Adaptations Pour Moteurs Electriques (IEC) / Acoplamientos Para Motores Eléctricos (IEC)

PL	IEC 63			IEC 71			IEC 80			IEC 90			IEC 100		
	LT	Z	ØD	LT	Z	ØD	LT	Z	ØD	LT	Z	ØD	LT	Z	ØD
18002	-			-			-			-			-		
18003	336.5	36	140	336.5	36	160	356.5	56	200	356.5	56	200	366.5	66	250
18004	384.5			384.5			404.5			404.5			414.5		

PL	IEC 112			IEC 132			IEC 160			IEC 180		
	LT	Z	ØD	LT	Z	ØD	LT	Z	ØD	LT	Z	ØD
18002	-			-			359	118	350	359	118	350
18003	366.5	66	250	400.5	100	300	439.5	139		-		
18004	414.5			448.5			487.5			-		

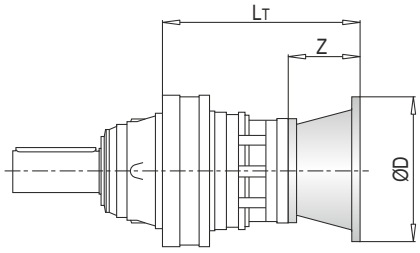

PL	IEC ~ Kg								
	63	71	80	90	100	112	132	160	180
18002	-	-	-	-	-	-	-	154	154
18003	149	149	151	151	152	152	156	166	-
18004	156	156	158	158	159	159	163	173	-

PL 18000 MC - Giriş Milleri / Input Shafts / Antriebswellen / Alberi Entrata / Arbres D'entree / Ejes De Entrada

PL	EL C 28				EL C 42				EML 42				EML 1"3/8 Z6				EM 65				EM 1"3/8 Z6			
	LT	Z	L	Ød	LT	Z	L	Ød	LT	Z	L	Ød	LT	Z	L	Ød	LT	Z	L	Ød	LT	Z	L	Ød
18002	-				-				-				-				362.5	121.5	105	65	362.5	121.5	105	1"3/8
18003	364.5	64	50	28	364.5	64	82	42	394.5	94	82	42	394.5	94	106	1"3/8	422				422			
18004	412.5				412.5				442.5				442.5				-				-			

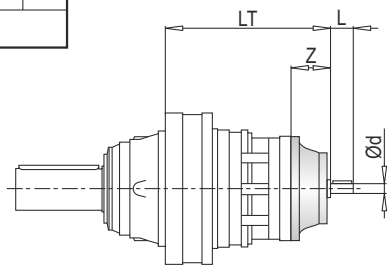

PL	EP 65			
	LT	Z	L	Ød
18002	394	153	105	65
18003	453.5			
18004	-			

PL	~ Kg						
	EL C 28	EL C 42	EML 42	EML 1"3/8 Z6	EM 65	EM 1"3/8 Z6	EP 65
18002	-	-	-	-	149.0	149.0	158.0
18003	149.5	150.0	153.0	153.0	161.0	161.0	170.0
18004	156.5	157.0	160.0	160.0	-	-	-

PL 18000 MC - Sonsuz Dişlili Redüktör Adaptörleri (PMRV/PRV) / Worm Gearbox Adaptors (PMRV/PRV) / Anschluss Für Schneckengetriebe (PMRV/PRV) / Predisposizioni Per Riduttori A Vite Senza Fine (PMRV/PRV) / Adaptation Pour Reducteurs A Vis Sans Fin (PMRV/PRV) / Acoplamiento Para Reductores De Tornillo Sin Fin (PMRV/PRV)

PL	PMRV/PRV 050					PMRV/PRV 063					PMRV/PRV 075				
	LM	l	h	MA	G	LM	l	h	MA	G	LM	l	h	MA	G
18002	-					-					-				
18003	422	50	110	60	80	431.5	63	135	72	95	410.5	75	161	86	112.5
18004	470					479.5					458.5				

PL	PMRV/PRV 090					PMRV/PRV 110					PMRV/PRV 130				
	LM	l	h	MA	G	LM	l	h	MA	G	LM	l	h	MA	G
18002	-					375	110	237.5	127.5	160	380.5	130	277.5	147.5	180
18003	420.5	90	193	103	129.5	434.5					440				
18004	468.5					-					-				

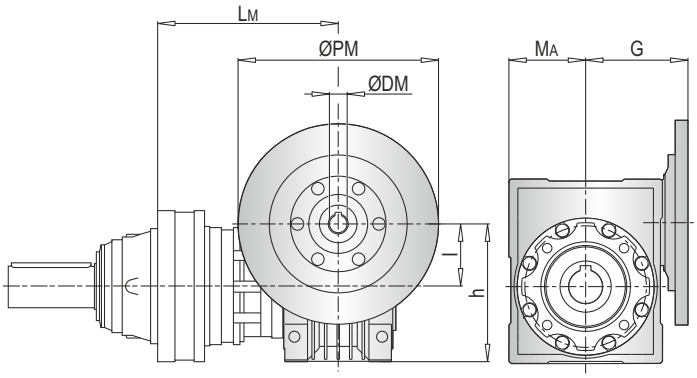

ØPM
ØDM
105

PL	PMRV/PRV ~ Kg					
	050	063	075	090	110	130
18002	-	-	-	-	178	195
18003	152	155.5	158	163	190	207
18004	159	162.5	165	170	-	-

PLB 18000 MC - Elektrik Motor Adaptörleri (IEC) / Electric Motor Couplings (IEC) / Anbauvorrichtung Für Elektromotore (IEC) / Predisposizioni Per Motori Elettrici (IEC) / Adaptations Pour Moteurs Electriques (IEC) / Acoplamientos Para Motores Eléctricos (IEC)

PLB	IEC 80				IEC 90				IEC 100				IEC 112				IEC 132			
	A	LT	Z	ØD	A	LT	Z	ØD	A	LT	Z	ØD	A	LT	Z	ØD	A	LT	Z	ØD
18002	-				-				-				-				-			
18003	329	296	56	200	329	296	56	200	329	306	66	250	329	306	66	250	329	340	100	300
18004	402				402				402				402				402			

PLB	IEC 160				IEC 180			
	A	LT	Z	ØD	A	LT	Z	ØD
18002	276	433	118	350	276	433	118	350
18003	329	379	139		-			
18004	402				-			

PLB	IEC ~ Kg						
	80	90	100	112	132	160	180
18002	-	-	-	-	-	221	221
18003	176	176	177	177	181	191	-
18004	178	178	179	179	183	193	-

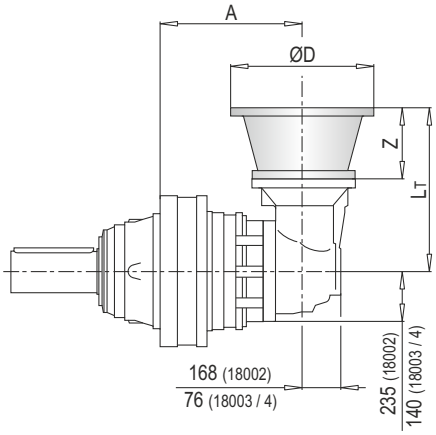

103

PLB 18000 MC - Giriş Milleri / Input Shafts / Antriebswellen / Alberi Entrata / Arbres D'entree / Ejes De Entrada

PLB	EL C 28					EL C 42					EML 42					EML 1"3/8 Z6					EM 65				
	A	LT	Z	L	Ød	A	LT	Z	L	Ød	A	LT	Z	L	Ød	A	LT	Z	L	Ød	A	LT	Z	L	Ød
18002	-					-					-					-					276	436.5	121.5	105	65
18003	329	304	64	50	28	329	304	64	82	42	329	334	94	82	42	329	334	94	106	1"3/8	329	361.5			
18004	402					402					402					402					402				

PLB	EM 1"3/8 Z6					EP 65				
	A	LT	Z	L	Ød	A	LT	Z	L	Ød
18002	276	436.5	121.5	105	1"3/8	276	468	153	105	65
18003	329	361.5				329	393			
18004	402					402				

PLB	~ Kg						
	EL C 28	EL C 42	EML 42	EML 1"3/8 Z6	EM 65	EM 1"3/8 Z6	EP 65
18002	-	-	-	-	216.0	216.0	225.0
18003	174.5	175.0	178.0	178.0	186.0	186.0	195.0
18004	176.5	177.0	180.0	180.0	188.0	188.0	197.0

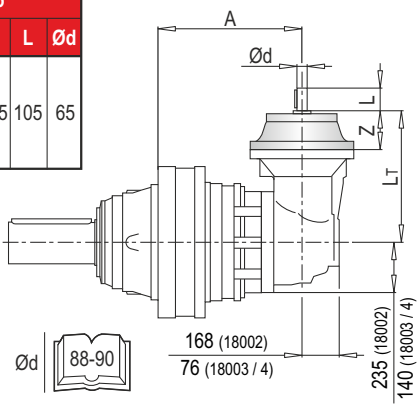

Ød 88-90

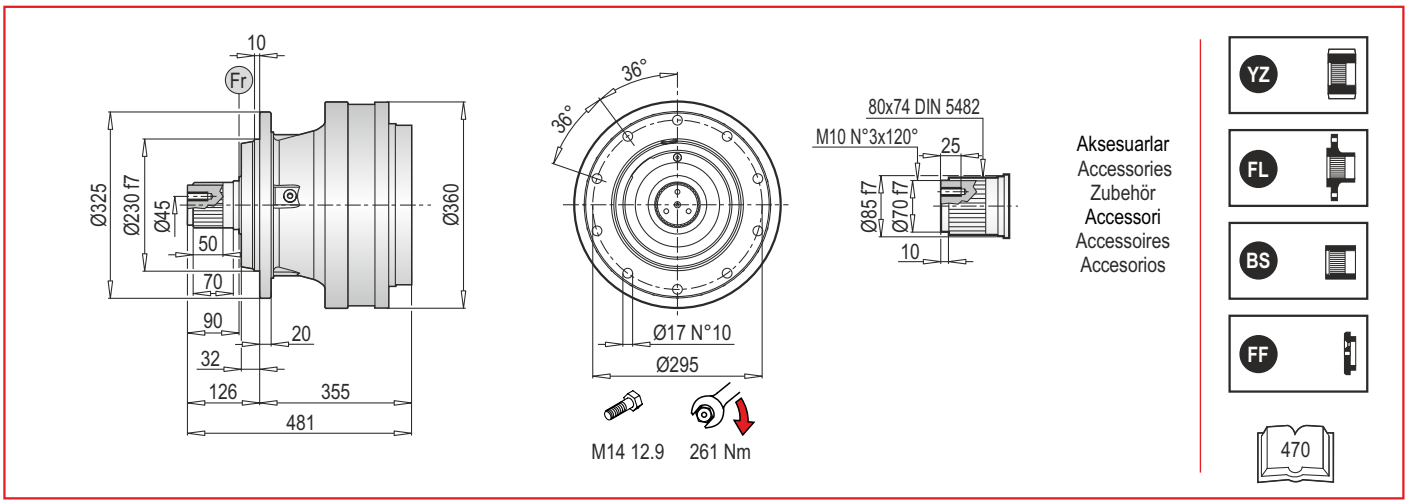

PL 18000 MSF - Elektrik Motor Adaptörleri (IEC) / Electrıc Motor Couplings (IEC) / Anbauvorrichtung Für Elektromotore (IEC) / Predisposizioni Per Motori Elettrici (IEC) / Adaptations Pour Moteurs Electriques (IEC) / Acoplamientos Para Motores Eléctricos (IEC)

PL	IEC 63			IEC 71			IEC 80			IEC 90			IEC 100		
	LT	Z	ØD	LT	Z	ØD	LT	Z	ØD	LT	Z	ØD	LT	Z	ØD
18002	-			-			-			-			-		
18003	450.5	36	140	450.5	36	160	470.5	56	200	470.5	56	200	480.5	66	250
18004	498.5			498.5			518.5			518.5			528.5		

PL	IEC 112			IEC 132			IEC 160			IEC 180		
	LT	Z	ØD	LT	Z	ØD	LT	Z	ØD	LT	Z	ØD
18002	-			-			473	118	350	473	118	350
18003	480.5	66	250	514.5	100	300	553.5	139	350	-		
18004	528.5			562.5			601.5			-		

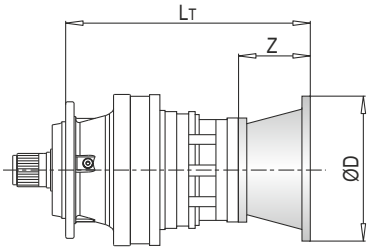

PL	IEC ~ Kg								
	63	71	80	90	100	112	132	160	180
18002	-	-	-	-	-	-	-	161	161
18003	156	156	158	158	159	159	163	173	-
18004	163	163	165	165	166	166	170	180	-

PL 18000 MSF - Giriş Milleri / Input Shafts / Antriebswellen / Alberi Entrata / Arbres D'entree / Ejes De Entrada

PL	EL C 28				EL C 42				EML 42				EML 1"3/8 Z6				EM 65				EM 1"3/8 Z6			
	LT	Z	L	Ød	LT	Z	L	Ød	LT	Z	L	Ød	LT	Z	L	Ød	LT	Z	L	Ød	LT	Z	L	Ød
18002	-				-				-				-				476.5	121.5	105	65	476.5	121.5	105	1"3/8
18003	478.5	64	50	28	478.5	64	82	42	508.5	94	82	42	508.5	94	106	1"3/8	549.5				549.5			
18004	526.5				526.5				556.5				556.5				-				-			

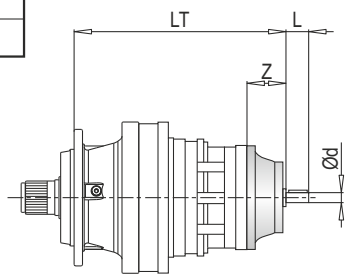

PL	EP 65			
	LT	Z	L	Ød
18002	508	153	105	65
18003	581			
18004	-			

PL	~ Kg						
	EL C 28	EL C 42	EML 42	EML 1"3/8 Z6	EM 65	EM 1"3/8 Z6	EP 65
18002	-	-	-	-	156.0	156.0	165.0
18003	156.5	157	160	160	168.0	168.0	177.0
18004	163.5	164	167	167	-	-	-

PL 18000 MSF - Sonsuz Dişlili Redüktör Adaptörleri (PMRV/PRV) / Worm Gearbox Adaptors (PMRV/PRV) / Anschluss Für Schneckengetriebe (PMRV/PRV) / Predisposizioni Per Riduttori A Vite Senza Fine (PMRV/PRV) / Adaptation Pour Reducteurs A Vis Sans Fin (PMRV/PRV) / Acoplamiento Para Reductores De Tornillo Sin Fin (PMRV/PRV)

PL	PMRV/PRV 050					PMRV/PRV 063					PMRV/PRV 075				
	LM	l	h	MA	G	LM	l	h	MA	G	LM	l	h	MA	G
18002	-					-					-				
18003	540	50	110	60	80	549.5	63	135	72	95	528.5	75	161	86	112.5
18004	588					597.5					576.5				

PL	PMRV/PRV 090					PMRV/PRV 110					PMRV/PRV 130				
	LM	l	h	MA	G	LM	l	h	MA	G	LM	l	h	MA	G
18002	-					493	110	237.5	127.5	160	500.5	130	277.5	147.5	180
18003	538.5	90	193	103	129.5	566					573.5				
18004	586.5					-					-				

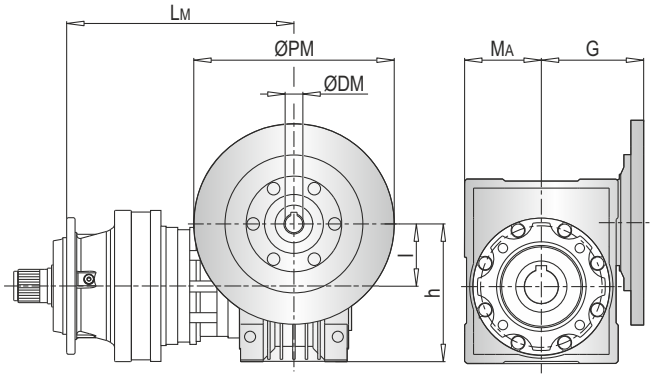

ØPM
ØDM
105

PL	PMRV/PRV ~ Kg					
	050	063	075	090	110	130
18002	-	-	-	-	185	202
18003	159	162.5	165	170	197	214
18004	166	169.5	172	177	-	-

PLB 18000 MSF - Elektrik Motor Adaptörleri (IEC) / Electric Motor Couplings (IEC) / Anbauvorrichtung Für Elektromotore (IEC) / Predisposizioni Per Motori Elettrici (IEC) / Adaptations Pour Moteurs Electriques (IEC) / Acoplamientos Para Motores Eléctricos (IEC)

PLB	IEC 80				IEC 90				IEC 100				IEC 112				IEC 132			
	A	LT	Z	ØD	A	LT	Z	ØD	A	LT	Z	ØD	A	LT	Z	ØD	A	LT	Z	ØD
18002	-				-				-				-				-			
18003	443	296	56	200	443	296	56	200	443	306	66	250	443	306	66	250	443	340	100	300
18004	516				516				516				516				516			

PLB	IEC 160				IEC 180			
	A	LT	Z	ØD	A	LT	Z	ØD
18002	390	433	118	350	390	433	118	350
18003	443	379	139		-			
18004	516				-			

PLB	IEC ~ Kg						
	80	90	100	112	132	160	180
18002	-	-	-	-	-	228	228
18003	183	183	184	184	188	198	-
18004	185	185	186	186	190	200	-

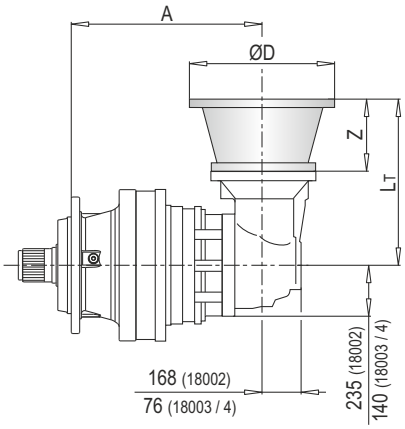

103

PLB 18000 MSF - Giriş Milleri / Input Shafts / Antriebswellen / Alberi Entrata / Arbres D'entree / Ejes De Entrada

PLB	EL C 28					EL C 42					EML 42					EML 1"3/8 Z6					EM 65				
	A	LT	Z	L	Ød	A	LT	Z	L	Ød	A	LT	Z	L	Ød	A	LT	Z	L	Ød	A	LT	Z	L	Ød
18002	-					-					-					-					390	436.5	121.5	105	65
18003	443	304	64	50	28	443	304	64	82	42	443	334	94	82	42	443	334	94	106	1"3/8	443	377.5			
18004	516					516					516					516					516				

PLB	EM 1"3/8 Z6					EP 65				
	A	LT	Z	L	Ød	A	LT	Z	L	Ød
18002	390	436.5	121.5	105	1"3/8	390	468	153	105	65
18003	443	377.5				443	409			
18004	516					516				

PLB	~ Kg						
	EL C 28	EL C 42	EML 42	EML 1"3/8 Z6	EM 65	EM 1"3/8 Z6	EP 65
18002	-	-	-	-	223	223	232
18003	181.5	182	185	185	193	193	202
18004	183.5	184	187	187	195	195	204

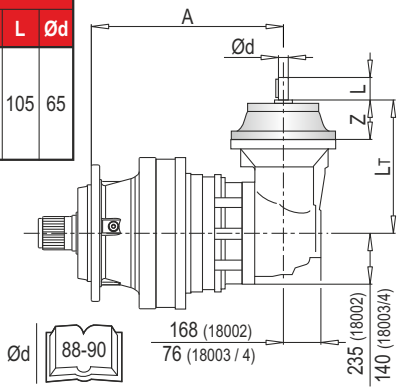

Ød 88-90

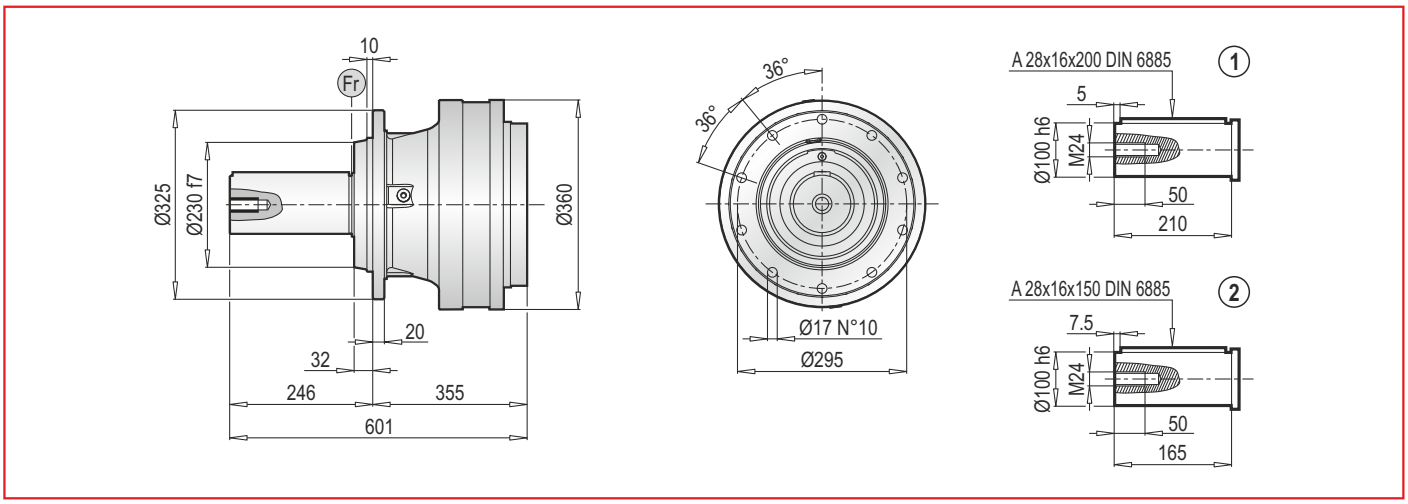

PL 18000 MCF - Elektrik Motor Adaptörleri (IEC) / Electrıc Motor Couplings (IEC) / Anbauvorrichtung Für Elektromotore (IEC) / Predisposizioni Per Motori Elettrici (IEC) / Adaptations Pour Moteurs Electriques (IEC) / Acoplamientos Para Motores Eléctricos (IEC)

PL	IEC 63			IEC 71			IEC 80			IEC 90			IEC 100		
	LT	Z	ØD	LT	Z	ØD	LT	Z	ØD	LT	Z	ØD	LT	Z	ØD
18002	-			-			-			-			-		
18003	450.5	36	140	450.5	36	160	470.5	56	200	470.5	56	200	480.5	66	250
18004	498.5			498.5			518.5			518.5			528.5		

PL	IEC 112			IEC 132			IEC 160			IEC 180		
	LT	Z	ØD	LT	Z	ØD	LT	Z	ØD	LT	Z	ØD
18002	-			-			473	118	350	473	118	350
18003	480.5	66	250	514.5	100	300	553.5	139		-		
18004	528.5			562.5			601.5			-		

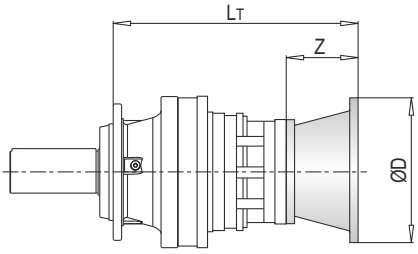

PL	IEC ~ Kg								
	63	71	80	90	100	112	132	160	180
18002	-	-	-	-	-	-	-	161	161
18003	156	156	158	158	159	159	163	173	-
18004	163	163	165	165	166	166	170	180	-

PL 18000 MCF - Giriş Milleri / Input Shafts / Antriebswellen / Alberi Entrata / Arbres D'entree / Ejes De Entrada

PL	EL C 28				EL C 42				EML 42				EML 1"3/8 Z6				EM 65				EM 1"3/8 Z6			
	LT	Z	L	Ød	LT	Z	L	Ød	LT	Z	L	Ød	LT	Z	L	Ød	LT	Z	L	Ød	LT	Z	L	Ød
18002	-				-				-				-				476.5	121.5	105	65	476.5	121.5	105	1"3/8
18003	478.5	64	50	28	478.5	64	82	42	508.5	94	82	42	508.5	94	106	1"3/8	549.5				549.5			
18004	526.5				526.5				556.5				556.5				-				-			

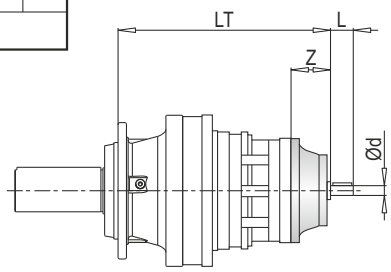

PL	EP 65			
	LT	Z	L	Ød
18002	508	153	105	65
18003	581			
18004	-			

PL	~ Kg						
	EL C 28	EL C 42	EML 42	EML 1"3/8 Z6	EM 65	EM 1"3/8 Z6	EP 65
18002	-	-	-	-	156	156	165
18003	156.5	157	160	160	168	168	177
18004	163.5	164	167	167	-	-	-

PL 18000 MCF - Sonsuz Dişlili Redüktör Adaptörleri (PMRV/PRV) / Worm Gearbox Adaptors (PMRV/PRV) / Anschluss Für Schneckengetriebe (PMRV/PRV) / Predisposizioni Per Riduttori A Vite Senza Fine (PMRV/PRV) / Adaptation Pour Reducteurs A Vis Sans Fin (PMRV/PRV) / Acoplamiento Para Reductores De Tornillo Sin Fin (PMRV/PRV)

PL	PMRV/PRV 050					PMRV/PRV 063					PMRV/PRV 075				
	LM	l	h	MA	G	LM	l	h	MA	G	LM	l	h	MA	G
18002	-					-					-				
18003	540	50	110	60	80	549.5	63	135	72	95	528.5	75	161	86	112.5
18004	588					597.5					576.5				

PL	PMRV/PRV 090					PMRV/PRV 110					PMRV/PRV 130				
	LM	l	h	MA	G	LM	l	h	MA	G	LM	l	h	MA	G
18002	-					493	110	237.5	127.5	160	505.5	130	277.5	147.5	180
18003	538.5	90	193	103	129.5	566					573.5				
18004	586.5					-					-				

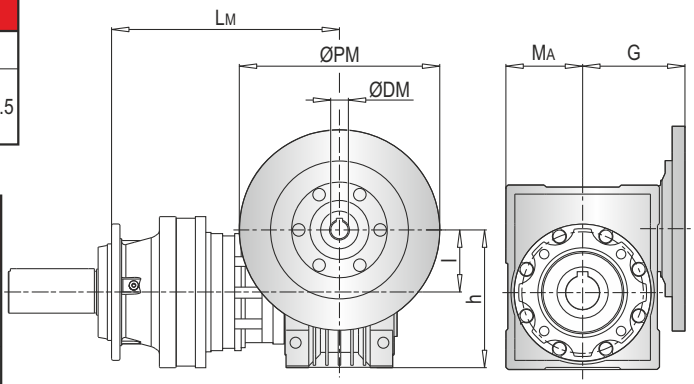

PL	PMRV/PRV ~ Kg					
	050	063	075	090	110	130
18002	-	-	-	-	185	202
18003	159	162.5	165	170	197	214
18004	166	169.5	172	177	-	-

ØPM
ØDM
105

PLB 18000 MCF - Elektrik Motor Adaptörleri (IEC) / Electric Motor Couplings (IEC) / Anbauvorrichtung Für Elektromotore (IEC) / Predisposizioni Per Motori Elettrici (IEC) / Adaptations Pour Moteurs Electriques (IEC) / Acoplamientos Para Motores Eléctricos (IEC)

PLB	IEC 80				IEC 90				IEC 100				IEC 112				IEC 132			
	A	LT	Z	ØD	A	LT	Z	ØD	A	LT	Z	ØD	A	LT	Z	ØD	A	LT	Z	ØD
18002	-				-				-				-				-			
18003	443	296	56	200	443	296	56	200	443	306	66	250	443				443			
18004	516				516				516				516				516			

PLB	IEC 160				IEC 180			
	A	LT	Z	ØD	A	LT	Z	ØD
18002	390	433	118	350	390	433	118	350
18003	443	379	139		-			
18004	516				-			

PLB	IEC ~ Kg						
	80	90	100	112	132	160	180
18002	-	-	-	-	-	228	228
18003	183	183	184	184	188	198	-
18004	185	185	186	186	190	200	-

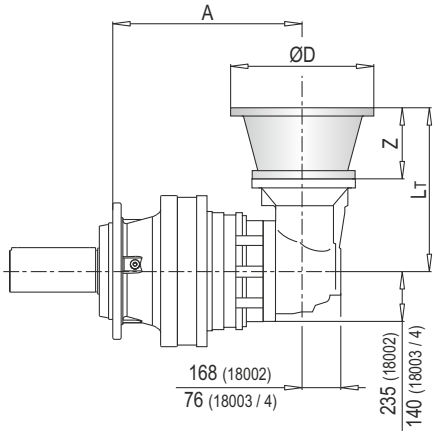

103

PLB 18000 MCF - Giriş Milleri / Input Shafts / Antriebswellen / Alberi Entrata / Arbres D'entree / Ejes De Entrada

PLB	EL C 28					EL C 42					EML 42					EML 1"3/8 Z6					EM 65				
	A	LT	Z	L	Ød	A	LT	Z	L	Ød	A	LT	Z	L	Ød	A	LT	Z	L	Ød	A	LT	Z	L	Ød
18002	-					-					-					-					390	436.5	121.5	105	65
18003	443	304	64	50	28	443	304	64	82	42	443	334	94	82	42	443	334	94	106	1"3/8	443	377.5			
18004	516					516					516					516					516				

PLB	EM 1"3/8 Z6					EP 65				
	A	LT	Z	L	Ød	A	LT	Z	L	Ød
18002	390	436.5	121.5	105	1"3/8	390	468	153	105	65
18003	443	377.5				443	409			
18004	516					516				

PLB	~ Kg						
	EL C 28	EL C 42	EML 42	EML 1"3/8 Z6	EM 65	EM 1"3/8 Z6	EP 65
18002	-	-	-	-	223	223	232
18003	181.5	182	185	185	193	193	202
18004	183.5	184	187	187	195	195	204

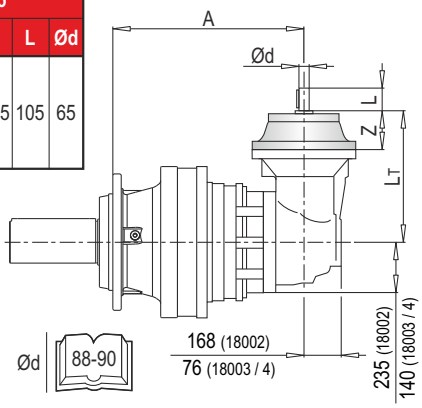

Ød 88-90

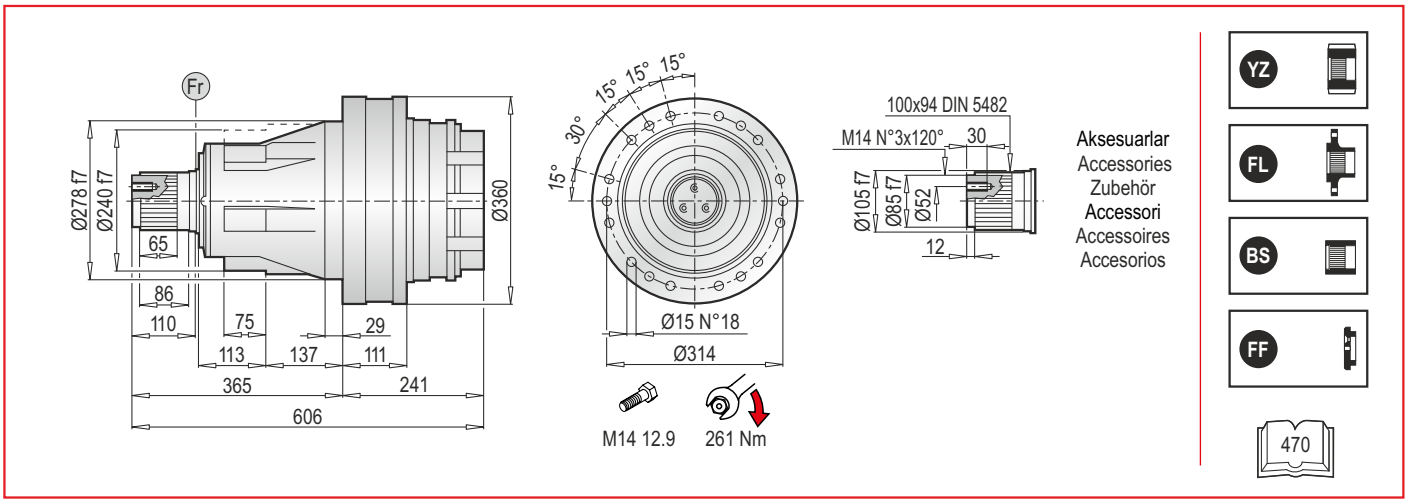

PL 18000 PS - Elektrik Motor Adaptörleri (IEC) / Electrıc Motor Couplings (IEC) /Anbauvorrichtung Für Elektromotore (IEC) / Predisposizioni Per Motori Elettrici (IEC) / Adaptations Pour Moteurs Electriques (IEC) /Acoplamientos Para Motores Eléctricos (IEC)

PL	IEC 63			IEC 71			IEC 80			IEC 90			IEC 100		
	LT	Z	ØD	LT	Z	ØD	LT	Z	ØD	LT	Z	ØD	LT	Z	ØD
18002	-			-			-			-			-		
18003	336.5	36	140	336.5	36	160	356.5	56	200	356.5	56	200	366.5	66	250
18004	384.5			384.5			404.5			404.5			414.5		

PL	IEC 112			IEC 132			IEC 160			IEC 180		
	LT	Z	ØD	LT	Z	ØD	LT	Z	ØD	LT	Z	ØD
18002	-			-			359	118	350	359	118	350
18003	366.5	66	250	400.5	100	300	439.5	139		-		
18004	414.5			448.5			487.5			-		

PL	IEC ~ Kg								
	63	71	80	90	100	112	132	160	180
18002	-	-	-	-	-	-	-	181	181
18003	176	176	178	178	179	179	183	193	-
18004	183	183	185	185	186	186	190	200	-

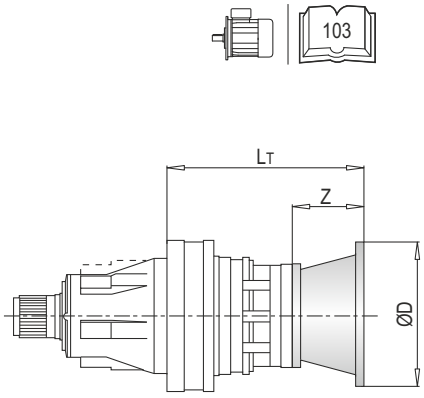

PL 18000 PS - Giriş Milleri / Input Shafts / Antriebswellen / Alberi Entrata / Arbres D'entree / Ejes De Entrada

PL	EL C 28				EL C 42				EML 42				EML 1"3/8 Z6				EM 65				EM 1"3/8 Z6			
	LT	Z	L	Ød	LT	Z	L	Ød	LT	Z	L	Ød	LT	Z	L	Ød	LT	Z	L	Ød	LT	Z	L	Ød
18002	-				-				-				-				362.5	121.5	105	65	362.5	121.5	105	1"3/8
18003	364.5	64	50	28	364.5	64	82	42	394.5	94	82	42	394.5	94	106	1"3/8	422				422			
18004	412.5				412.5				442.5				442.5				-				-			

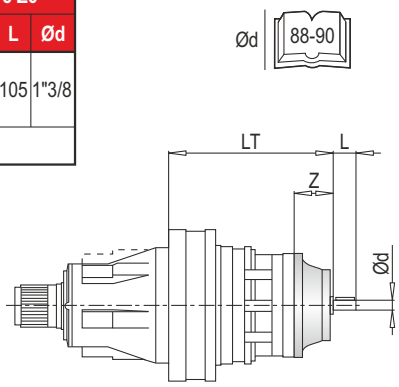

PL	EP 65			
	LT	Z	L	Ød
18002	394	153	105	65
18003	453.5			
18004	-			

PL	~ Kg						
	EL C 28	EL C 42	EML 42	EML 1"3/8 Z6	EM 65	EM 1"3/8 Z6	EP 65
18002	-	-	-	-	176.0	176.0	185.0
18003	176.5	177.0	180.0	180.0	188.0	188.0	197.0
18004	183.5	184.0	187.0	187.0	-	-	-

PL 18000 PS - Sonsuz Dişlili Redüktör Adaptörleri (PMRV/PRV) / Worm Gearbox Adaptors (PMRV/PRV) / Anschluss Für Schneckengetriebe (PMRV/PRV) / Predisposizioni Per Riduttori A Vite Senza Fine (PMRV/PRV) / Adaptation Pour Reducteurs A Vis Sans Fin (PMRV/PRV) / Acoplamiento Para Reductores De Tornillo Sin Fin (PMRV/PRV)

PL	PMRV/PRV 050					PMRV/PRV 063					PMRV/PRV 075				
	LM	l	h	MA	G	LM	l	h	MA	G	LM	l	h	MA	G
18002	-					-					-				
18003	426	50	110	60	80	435.5	63	135	72	95	414.5	75	161	86	112.5
18004	474					483.5					462.5				

PL	PMRV/PRV 090					PMRV/PRV 110					PMRV/PRV 130				
	LM	l	h	MA	G	LM	l	h	MA	G	LM	l	h	MA	G
18002	-					379	110	237.5	127.5	160	386.5	130	277.5	147.5	180
18003	424.5	90	193	103	129.5	452					459.5				
18004	472.5					-					-				

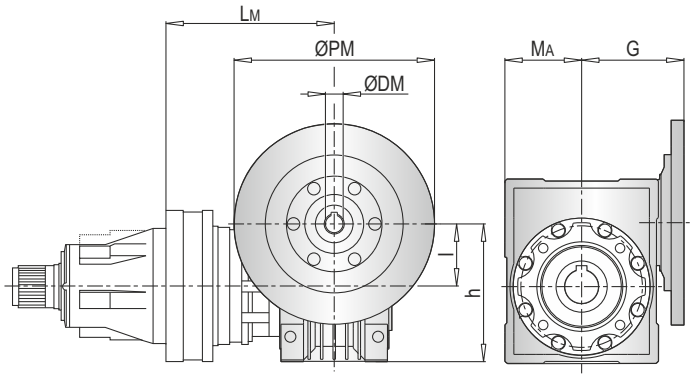

ØPM
ØDM
105

PL	PMRV/PRV ~ Kg					
	050	063	075	090	110	130
18002	-	-	-	-	205.0	222.0
18003	179	182.5	185.0	190.0	217.0	234.0
18004	186	189.5	192.0	197.0	-	-

PLB 18000 PS - Elektrik Motor Adaptörleri (IEC) / Electric Motor Couplings (IEC) / Anbauvorrichtung Für Elektromotore (IEC) / Predisposizioni Per Motori Elettrici (IEC) / Adaptations Pour Moteurs Electriques (IEC) / Acoplamientos Para Motores Eléctricos (IEC)

PLB	IEC 80				IEC 90				IEC 100				IEC 112				IEC 132			
	A	LT	Z	ØD	A	LT	Z	ØD	A	LT	Z	ØD	A	LT	Z	ØD	A	LT	Z	ØD
18002	-				-				-				-				-			
18003	329	296	56	200	329	296	56	200	329	306	66	250	329	306	66	250	329	340	100	300
18004	402				402				402				402				402			

PLB	IEC 160				IEC 180			
	A	LT	Z	ØD	A	LT	Z	ØD
18002	276	433	118	350	276	433	118	350
18003	329	379	139		-			
18004	402				-			

PLB	IEC ~ Kg						
	80	90	100	112	132	160	180
18002	-	-	-	-	-	248.0	248.0
18003	203.0	203.0	204.0	204.0	208.0	218.0	-
18004	205.0	205.0	206.0	206.0	210.0	220.0	-

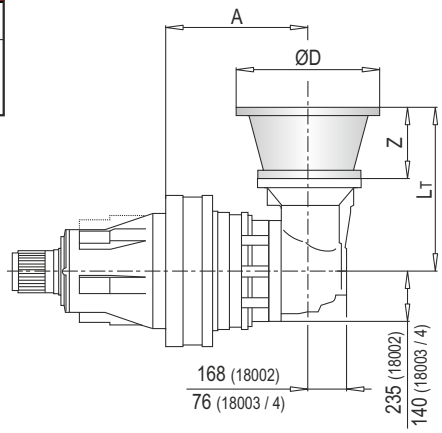

103

PLB 18000 PS - Giriş Milleri / Input Shafts / Antriebswellen / Alberi Entrata / Arbres D'entree / Ejes De Entrada

PLB	EL C 28					EL C 42					EML 42					EML 1"3/8 Z6					EM 65				
	A	LT	Z	L	Ød	A	LT	Z	L	Ød	A	LT	Z	L	Ød	A	LT	Z	L	Ød	A	LT	Z	L	Ød
18002	-					-					-					-					276	436.5	121.5	105	65
18003	329	304	64	50	28	329	304	64	82	42	329	334	94	82	42	329	334	94	106	1"3/8	329	377.5	-	-	-
18004	402					402					402					402					402				

PLB	EM 1"3/8 Z6					EP 65				
	A	LT	Z	L	Ød	A	LT	Z	L	Ød
18002	276	436.5	121.5	105	1"3/8	276	468	153	105	65
18003	329	377.5				329	409			
18004	402		-	-	-	402		-	-	-

PLB	~ Kg						
	EL C 28	EL C 42	EML 42	EML 1"3/8 Z6	EM 65	EM 1"3/8 Z6	EP 65
18002	-	-	-	-	243.0	243.0	252.0
18003	201.5	202.0	205.0	205.0	213.0	213.0	222.0
18004	203.5	204.0	207.0	207.0	-	-	-

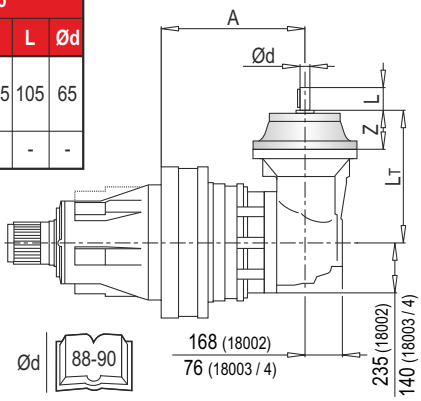

Ød 88-90

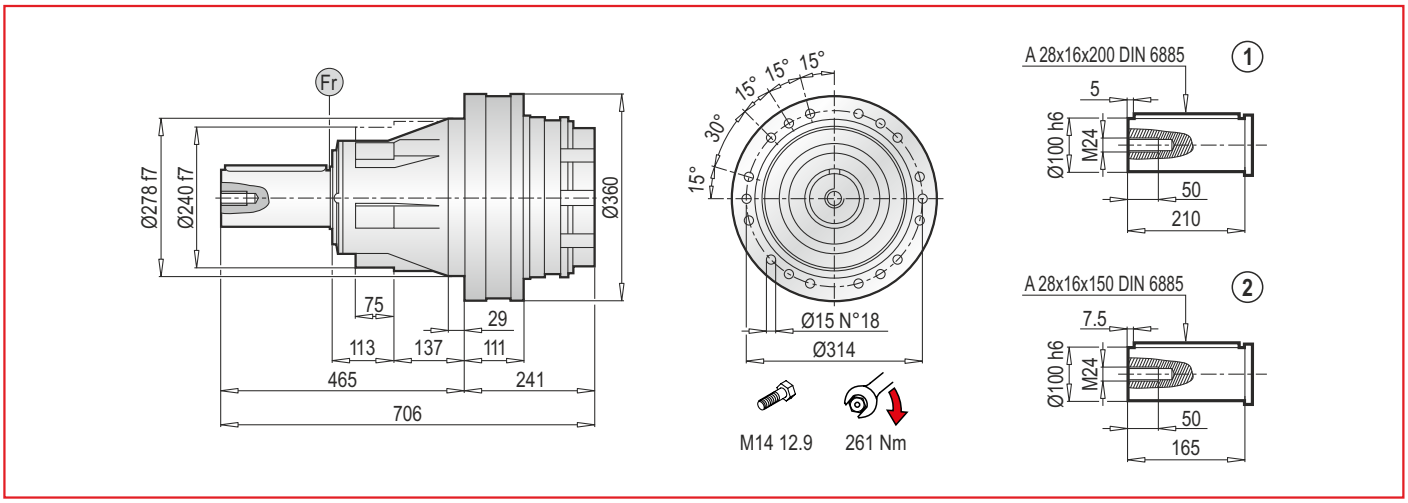

PL 18000 PC - Elektrik Motor Adaptörleri (IEC) / Electric Motor Couplings (IEC) /Anbauvorrichtung Für Elektromotore (IEC) / Predisposizioni Per Motori Elettrici (IEC) / Adaptations Pour Moteurs Electriques (IEC) /Acoplamientos Para Motores Eléctricos (IEC)

PL	IEC 63			IEC 71			IEC 80			IEC 90			IEC 100		
	LT	Z	ØD	LT	Z	ØD	LT	Z	ØD	LT	Z	ØD	LT	Z	ØD
18002	-			-			-			-			-		
18003	336.5	36	140	336.5	36	160	356.5	56	200	356.5	56	200	366.5	66	250
18004	384.5			384.5			404.5			404.5			414.5		

PL	IEC 112			IEC 132			IEC 160			IEC 180		
	LT	Z	ØD	LT	Z	ØD	LT	Z	ØD	LT	Z	ØD
18002	-			-			359	118	350	359	118	350
18003	366.5	66	250	400.5	100	300	439.5	139		-		
18004	414.5			448.5			487.5			-		

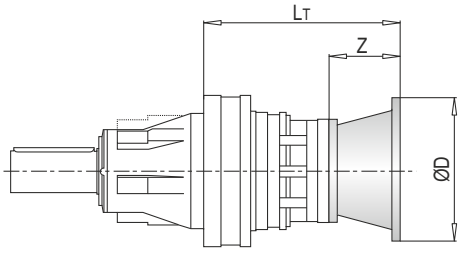

PL	IEC ~ Kg								
	63	71	80	90	100	112	132	160	180
18002	-	-	-	-	-	-	-	181	181
18003	176	176	178	178	179	179	183	193	-
18004	183	183	185	185	186	186	190	200	-

PL 18000 PC - Giriş Milleri / Input Shafts / Antriebswellen / Alberi Entrata / Arbres D'entree / Ejes De Entrada

PL	EL C 28				EL C 42				EML 42				EML 1"3/8 Z6				EM 65				EM 1"3/8 Z6			
	LT	Z	L	Ød	LT	Z	L	Ød	LT	Z	L	Ød	LT	Z	L	Ød	LT	Z	L	Ød	LT	Z	L	Ød
18002	-				-				-				-				362.5	121.5	105	65	362.5	121.5	105	1"3/8
18003	364.5	64	50	28	364.5	64	82	42	394.5	94	82	42	394.5	94	106	1"3/8	435.5				435.5			
18004	412.5				412.5				442.5				442.5				-				-			

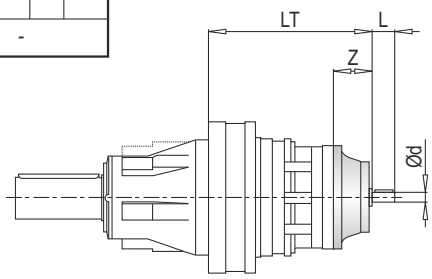

PL	EP 65			
	LT	Z	L	Ød
18002	394	153	105	65
18003	467			
18004	-			

PL	~ Kg						
	EL C 28	EL C 42	EML 42	EML 1"3/8 Z6	EM 65	EM 1"3/8 Z6	EP 65
18002	-	-	-	-	176.0	176.0	185.0
18003	176.5	177.0	180.0	180.0	188.0	188.0	197.0
18004	183.5	184.0	187.0	187.0	-	-	-

PL 18000 PC - Sonsuz Dişlili Redüktör Adaptörleri (PMRV/PRV) / Worm Gearbox Adaptors (PMRV/PRV) / Anschluss Für Schneckengetriebe (PMRV/PRV) / Predisposizioni Per Riduttori A Vite Senza Fine (PMRV/PRV) / Adaptation Pour Reducteurs A Vis Sans Fin (PMRV/PRV) / Acoplamiento Para Reductores De Tornillo Sin Fin (PMRV/PRV)

PL	PMRV/PRV 050					PMRV/PRV 063					PMRV/PRV 075				
	LM	l	h	MA	G	LM	l	h	MA	G	LM	l	h	MA	G
18002	-					-					-				
18003	426	50	110	60	80	435.5	63	135	72	95	414.5	75	161	86	112.5
18004	474					483.5					462.5				

PL	PMRV/PRV 090					PMRV/PRV 110					PMRV/PRV 130				
	LM	l	h	MA	G	LM	l	h	MA	G	LM	l	h	MA	G
18002	-					379	110	237.5	127.5	160	386.5	130	277.5	147.5	180
18003	424.5	90	193	103	129.5	452					459.5				
18004	472.5					-					-				

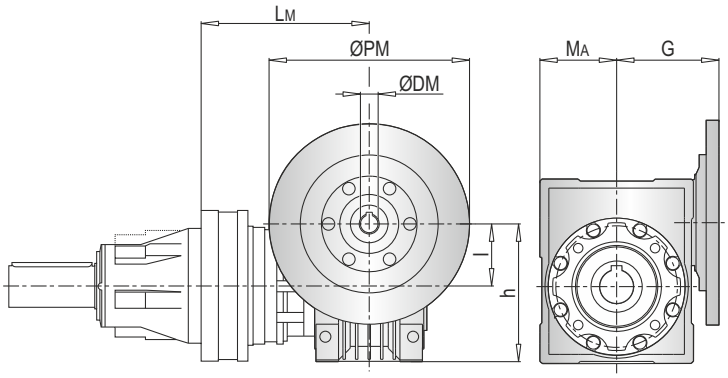

ØPM
ØDM
105

PL	PMRV/PRV ~ Kg					
	50	63	75	90	110	130
18002	-	-	-	-	205.0	222.0
18003	179	182.5	185.0	190.0	217.0	234.0
18004	186	189.5	192.0	197.0	-	-

PLB 18000 PC - Elektrik Motor Adaptörleri (IEC) / Electric Motor Couplings (IEC) / Anbauvorrichtung Für Elektromotore (IEC) / Predisposizioni Per Motori Elettrici (IEC) / Adaptations Pour Moteurs Electriques (IEC) / Acoplamientos Para Motores Eléctricos (IEC)

PLB	IEC 80				IEC 90				IEC 100				IEC 112				IEC 132			
	A	LT	Z	ØD	A	LT	Z	ØD	A	LT	Z	ØD	A	LT	Z	ØD	A	LT	Z	ØD
18002	-				-				-				-				-			
18003	329	296	56	200	329	296	56	200	329	306	66	250	329	306	66	250	329	340	100	300
18004	402				402				402				402				402			

PLB	IEC 160				IEC 180			
	A	LT	Z	ØD	A	LT	Z	ØD
18002	276	433	118	350	276	433	118	350
18003	329	379	139		-			
18004	402				-			

PLB	IEC ~ Kg						
	80	90	100	112	132	160	180
18002	-	-	-	-	-	248.0	248.0
18003	203.0	203.0	204.0	204.0	208.0	218.0	-
18004	205.0	205.0	206.0	206.0	210.0	220.0	-

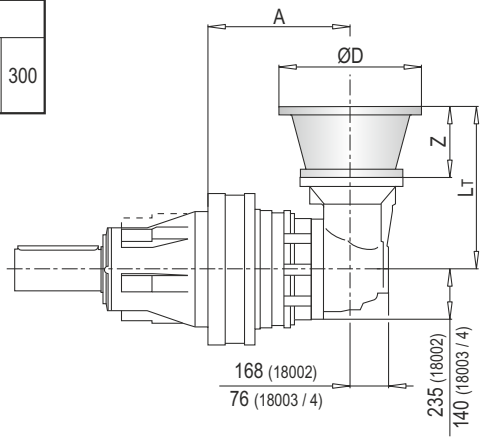

103

PLB 18000 PC - Giriş Milleri / Input Shafts / Antriebswellen / Alberi Entrata / Arbres D'entree / Ejes De Entrada

PLB	EL C 28					EL C 42					EML 42					EML 1"3/8 Z6					EM 65				
	A	LT	Z	L	Ød	A	LT	Z	L	Ød	A	LT	Z	L	Ød	A	LT	Z	L	Ød	A	LT	Z	L	Ød
18002	-					-					-					-					276	436.5	121.5	105	65
18003	329	304	64	50	28	329	304	64	82	42	329	334	94	82	42	329	334	94	106	1"3/8	329	377.5	-	-	-
18004	402					402					402					402					402				

PLB	EM 1"3/8 Z6					EP 65				
	A	LT	Z	L	Ød	A	LT	Z	L	Ød
18002	276	436.5	121.5	105	1"3/8	276	468	153	105	65
18003	329	377.5				329	409			
18004	402		-			402		-	-	-

PLB	~ Kg						
	EL C 28	EL C 42	EML 42	EML 1"3/8 Z6	EM 65	EM 1"3/8 Z6	EP 65
18002	-	-	-	-	243.0	243.0	252.0
18003	201.5	202.0	205.0	205.0	213.0	213.0	222.0
18004	203.5	204.0	207.0	207.0	-	-	-

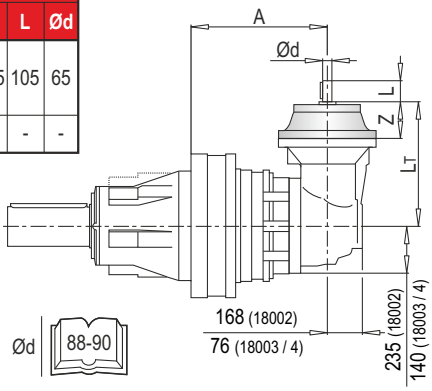

Ød 88-90

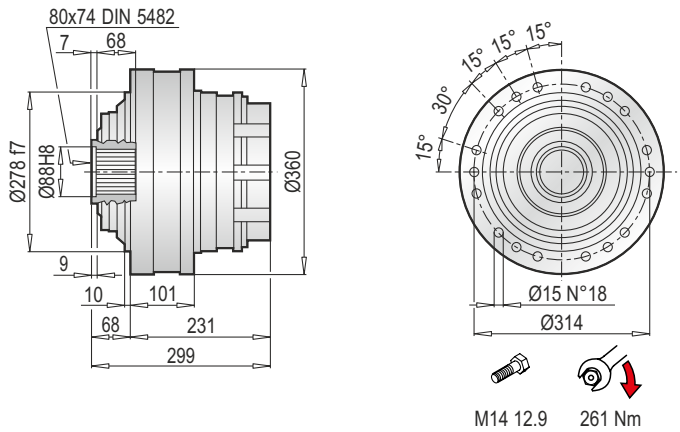

Aksesuarlar
Accessories
Zubehör
Accessori
Accessoires
Accesorios

KB

470

PL 18000 F - Elektrik Motor Adaptörleri (IEC) / Electrıc Motor Couplings (IEC) / Anbauvorrichtung Für Elektromotore (IEC) / Predisposizioni Per Motori Elettrici (IEC) / Adaptations Pour Moteurs Electriques (IEC) / Acoplamientos Para Motores Eléctricos (IEC)

PL	IEC 63			IEC 71			IEC 80			IEC 90			IEC 100		
	LT	Z	ØD	LT	Z	ØD	LT	Z	ØD	LT	Z	ØD	LT	Z	ØD
18002	-			-			-			-			-		
18003	326.5	36	140	326.5	36	160	346.5	56	200	346.5	56	200	356.5	66	250
18004	374.5			374.5			394.5			394.5			404.5		

PL	IEC 112			IEC 132			IEC 160			IEC 180		
	LT	Z	ØD	LT	Z	ØD	LT	Z	ØD	LT	Z	ØD
18002	-			-			349	118	350	349	118	350
18003	356.5	66	250	390.5	100	300	429.5	139	350	-		
18004	404.5			438.5			477.5			-		

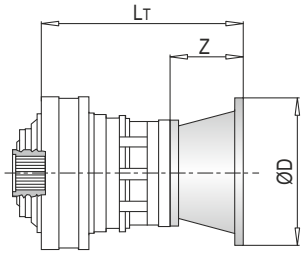

PL	IEC ~ Kg								
	63	71	80	90	100	112	132	160	180
18002	-	-	-	-	-	-	-	122	122
18003	118	118	120	120	121	121	125	135	-
18004	125	125	127	127	128	128	132	142	-

PL 18000 F - Giriş Milleri / Input Shafts / Antriebswellen / Alberi Entrata / Arbres D'entree / Ejes De Entrada

PL	EL C 28				EL C 42				EML 42				EML 1"3/8 Z6				EM 65				EM 1"3/8 Z6			
	LT	Z	L	Ød	LT	Z	L	Ød	LT	Z	L	Ød	LT	Z	L	Ød	LT	Z	L	Ød	LT	Z	L	Ød
18002	-				-				-				-				352.5	121.5	105	65	352.5	121.5	105	1"3/8
18003	354.5	64	50	28	354.5	64	82	42	384.5	94	82	42	384.5	94	106	1"3/8	425.5				425.5			
18004	402.5				402.5				432.5				432.5				-				-			

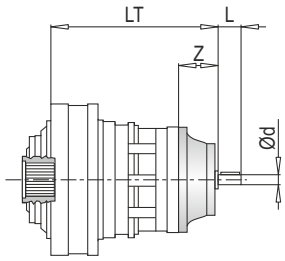

PL	EP 65			
	LT	Z	L	Ød
18002	384	153	105	65
18003	457			
18004	-			

PL	~ Kg						
	EL C 28	EL C 42	EML 42	EML 1"3/8 Z6	EM 65	EM 1"3/8 Z6	EP 65
18002	-	-	-	-	118.0	118.0	127.0
18003	118.5	119.0	122	122	128	128	137
18004	125.5	126.0	129.0	129.0	-	-	-

PL 18000 F - Sonsuz Dişlili Redüktör Adaptörleri (PMRV/PRV) / Worm Gearbox Adaptors (PMRV/PRV) / Anschluss Für Schneckengetriebe (PMRV/PRV) / Predisposizioni Per Riduttori A Vite Senza Fine (PMRV/PRV) / Adaptation Pour Reducteurs A Vis Sans Fin (PMRV/PRV) / Acoplamiento Para Reductores De Tornillo Sin Fin (PMRV/PRV)

PL	PMRV/PRV 050					PMRV/PRV 063					PMRV/PRV 075				
	LM	l	h	MA	G	LM	l	h	MA	G	LM	l	h	MA	G
18002	-					-					-				
18003	416	50	110	60	80	425.5	63	135	72	95	404.5	75	161	86	112.5
18004	464					473.5					452.5				

PL	PMRV/PRV 090					PMRV/PRV 110					PMRV/PRV 130				
	LM	l	h	MA	G	LM	l	h	MA	G	LM	l	h	MA	G
18002	-					369	110	237.5	127.5	160	376.5	130	277.5	147.5	180
18003	414.5	90	193	103	129.5	442					449.5				
18004	462.5					-					-				

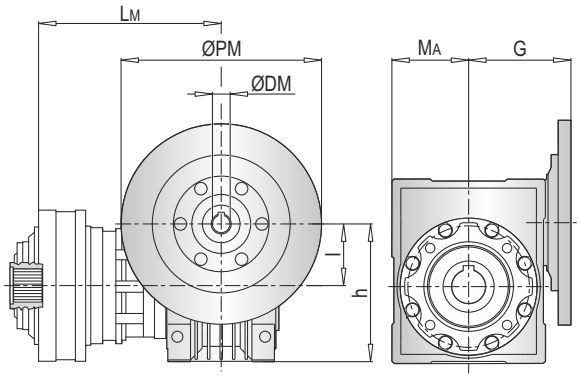

ØPM
ØDM
105

PL	PMRV/PRV ~ Kg					
	050	063	075	090	110	130
18002	-	-	-	-	146	163
18003	121	124.5	127	132	159	176
18004	128	131.5	134	139	-	-

PLB 18000 F - Elektrik Motor Adaptörleri (IEC) / Electric Motor Couplings (IEC) /Anbauvorrichtung Für Elektromotore (IEC) / Predisposizioni Per Motori Elettrici (IEC) / Adaptations Pour Moteurs Electriques (IEC) /Acoplamientos Para Motores Eléctricos (IEC)

PLB	IEC 80				IEC 90				IEC 100				IEC 112				IEC 132			
	A	LT	Z	ØD	A	LT	Z	ØD	A	LT	Z	ØD	A	LT	Z	ØD	A	LT	Z	ØD
18002	-				-				-				-				-			
18003	319	296	56	200	319	296	56	200	319	306	66	250	319	306	66	250	319	340	100	300
18004	392				392				392				392				392			

PLB	IEC 160				IEC 180			
	A	LT	Z	ØD	A	LT	Z	ØD
18002	266	433	118	350	266	433	118	350
18003	319	379	139		-			
18004	392				-			

PLB	IEC ~ Kg						
	80	90	100	112	132	160	180
18002	-	-	-	-	-	190	190
18003	145	145	146	146	150	160	-
18004	147	147	148	148	152	162	-

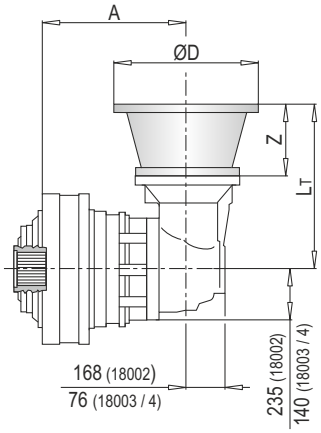

103

PLB 18000 F - Giriş Milleri / Input Shafts / Antriebswellen / Alberi Entrata / Arbres D'entree / Ejes De Entrada

PLB	EL C 28					EL C 42					EML 42					EML 1"3/8 Z6					EM 65				
	A	LT	Z	L	Ød	A	LT	Z	L	Ød	A	LT	Z	L	Ød	A	LT	Z	L	Ød	A	LT	Z	L	Ød
18002	-					-					-					-					266	436.5	121.5	105	65
18003	319	304	64	50	28	319	304	64	82	42	319	334	94	82	42	319	334	94	106	1"3/8	319	377.5			
18004	392					392					392					392					392		-	-	-

PLB	EM 1"3/8 Z6					EP 65				
	A	LT	Z	L	Ød	A	LT	Z	L	Ød
18002	266	436.5	121.5	105	1"3/8	266	468	153	105	65
18003	319	377.5				319	409			
18004	392		-	-	-	392		-	-	-

PLB	~ Kg						
	EL C 28	EL C 42	EML 42	EML 1"3/8 Z6	EM 65	EM 1"3/8 Z6	EP 65
18002	-	-	-	-	185.0	185.0	194.0
18003	143.5	144.0	147.0	147.0	155.0	155.0	164.0
18004	145.5	146.0	149.0	149.0	-	-	-

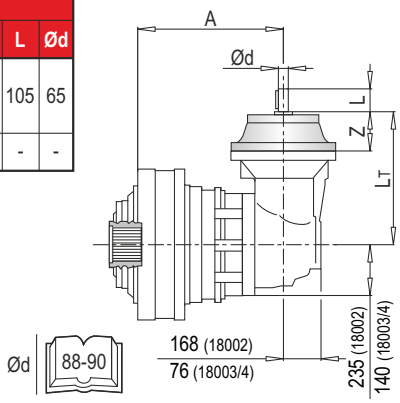

Ød 88-90

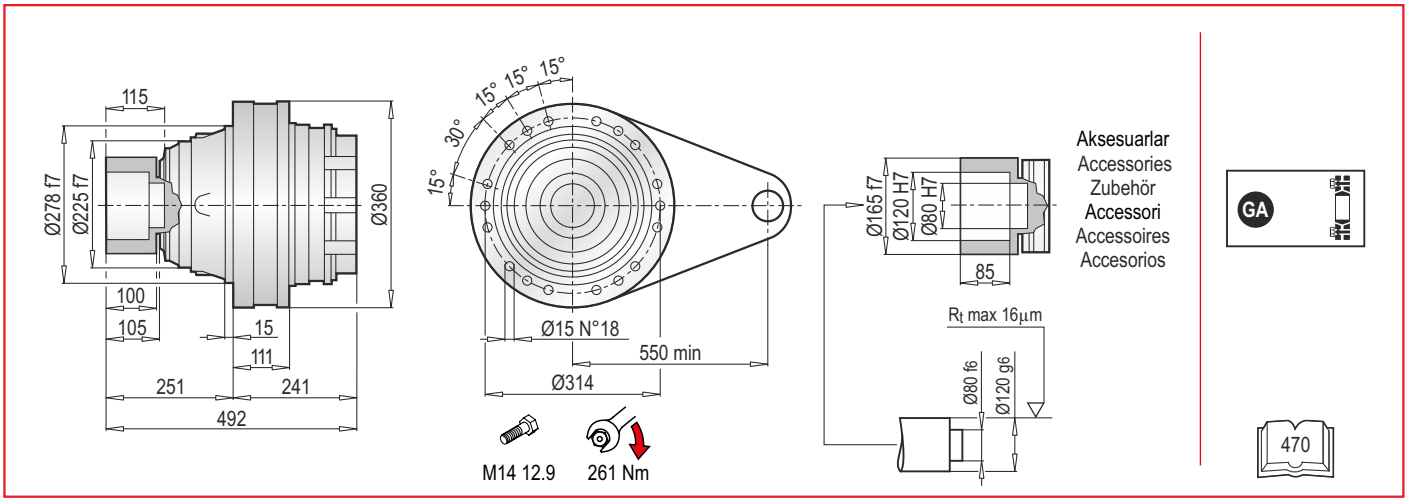

PL 18000 FS - Elektrik Motor Adaptörlü (IEC) / Electrıc Motor Couplings (IEC) / Anbauvorrichtung Für Elektromotore (IEC) / Predisposizioni Per Motori Elettrici (IEC) / Adaptations Pour Moteurs Electriques (IEC) / Acoplamientos Para Motores Eléctricos (IEC)

PL	IEC 63			IEC 71			IEC 80			IEC 90			IEC 100		
	LT	Z	ØD	LT	Z	ØD	LT	Z	ØD	LT	Z	ØD	LT	Z	ØD
18002	-			-			-			-			-		
18003	336.5	36	140	336.5	36	160	356.5	56	200	356.5	56	200	366.5	66	250
18004	384.5			384.5			404.5			404.5			414.5		

PL	IEC 112			IEC 132			IEC 160			IEC 180		
	LT	Z	ØD	LT	Z	ØD	LT	Z	ØD	LT	Z	ØD
18002	-			-			359	118	350	359	118	350
18003	366.5	66	250	400.5	100	300	439.5	139		-		
18004	414.5			448.5			487.5			-		

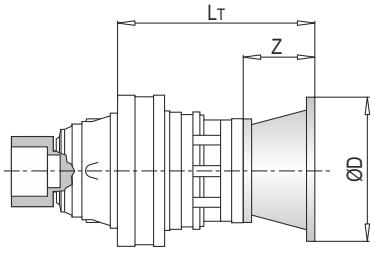

PL	IEC ~ Kg								
	63	71	80	90	100	112	132	160	180
18002	-	-	-	-	-	-	-	159	159
18003	154	154	156	156	157	157	161	171	-
18004	161	161	163	163	164	164	169	179	-

PL 18000 FS - Giriş Milleri / Input Shafts / Antriebswellen / Alberi Entrata / Arbres D'entree / Ejes De Entrada

PL	EL C 28				EL C 42				EML 42				EML 1"3/8 Z6				EM 65				EM 1"3/8 Z6			
	LT	Z	L	Ød	LT	Z	L	Ød	LT	Z	L	Ød	LT	Z	L	Ød	LT	Z	L	Ød	LT	Z	L	Ød
18002	-				-				-				-				362.5	121.5	105	65	362.5	121.5	105	1"3/8
18003	364.5	64	50	28	364.5	64	82	42	394.5	94	82	42	394.5	94	106	1"3/8	435.5				435.5			
18004	412.5				412.5				442.5				442.5				-				-			

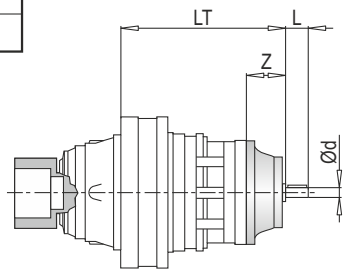

PL	EP 65			
	LT	Z	L	Ød
18002	394	153	105	65
18003	467			
18004	-			

PL	~ Kg						
	EL C 28	EL C 42	EML 42	EML 1"3/8 Z6	EM 65	EM 1"3/8 Z6	EP 65
18002	-	-	-	-	154.0	154.0	163.0
18003	154.5	155.0	158.0	158.0	166.0	166.0	175.0
18004	161.5	162.0	165.0	165.0	-	-	-

PL 18000 FS - Sonsuz Dişlili Redüktör Adaptörleri (PMRV/PRV) / Worm Gearbox Adaptors (PMRV/PRV) / Anschluss Für Schneckengetriebe (PMRV/PRV) / Predisposizioni Per Riduttori A Vite Senza Fine (PMRV/PRV) / Adaptation Pour Reducteurs A Vis Sans Fin (PMRV/PRV) / Acoplamiento Para Reductores De Tornillo Sin Fin (PMRV/PRV)

PL	PMRV/PRV 050					PMRV/PRV 063					PMRV/PRV 075				
	LM	l	h	MA	G	LM	l	h	MA	G	LM	l	h	MA	G
18002	-					-					-				
18003	426	50	110	60	80	435.5	63	135	72	95	414.5	75	161	86	112.5
18004	474					483.5					462.5				

PL	PMRV/PRV 090					PMRV/PRV 110					PMRV/PRV 130				
	LM	l	h	MA	G	LM	l	h	MA	G	LM	l	h	MA	G
18002	-					379	110	237.5	127.5	160	386.5	130	277.5	147.5	180
18003	424.5	90	193	103	129.5	452					459.5				
18004	472.5					-					-				

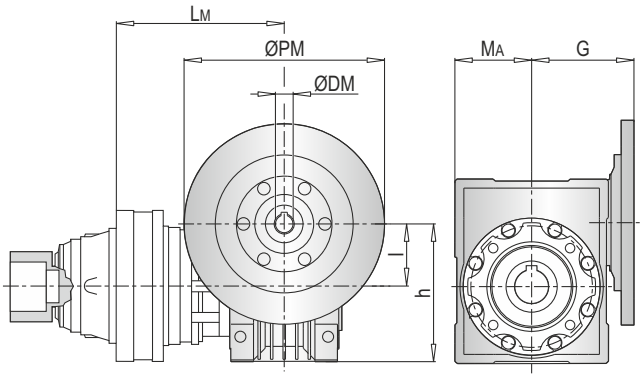

PL	PMRV/PRV ~ Kg					
	050	063	075	090	110	130
18002	-	-	-	-	183	200
18003	157	160.5	163	168	195	212
18004	164	167.5	170	175	-	-

ØPM
ØDM
105

PLB 18000 FS - Elektrik Motor Adaptörleri (IEC) / Electric Motor Couplings (IEC) / Anbauvorrichtung Für Elektromotore (IEC) / Predisposizioni Per Motori Elettrici (IEC) / Adaptations Pour Moteurs Electriques (IEC) / Acoplamientos Para Motores Eléctricos (IEC)

PLB	IEC 80				IEC 90				IEC 100				IEC 112				IEC 132			
	A	LT	Z	ØD	A	LT	Z	ØD	A	LT	Z	ØD	A	LT	Z	ØD	A	LT	Z	ØD
18002	-				-				-				-				-			
18003	329	296	56	200	329	296	56	200	329	306	66	250	329	306	66	250	329	340	100	300
18004	402				402				402				402				402			

PLB	IEC 160				IEC 180			
	A	LT	Z	ØD	A	LT	Z	ØD
18002	276	433	118	350	276	433	118	350
18003	329	379	139		-			
18004	402				-			

PLB	IEC ~ Kg						
	80	90	100	112	132	160	180
18002	-	-	-	-	-	226	226
18003	181	181	182	182	186	196	-
18004	183	183	184	184	188	198	-

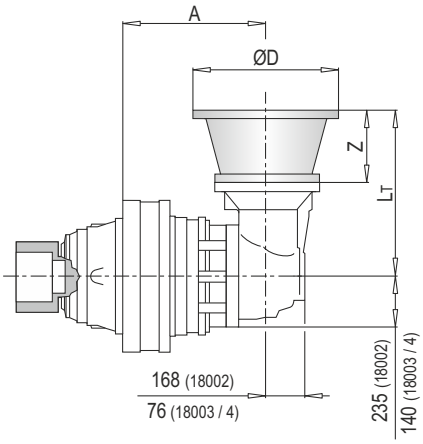

103

PLB 18000 FS - Giriş Milleri / Input Shafts / Antriebswellen / Alberi Entrata / Arbres D'entree / Ejes De Entrada

PLB	EL C 28					EL C 42					EML 42					EML 1"3/8 Z6					EM 65				
	A	LT	Z	L	Ød	A	LT	Z	L	Ød	A	LT	Z	L	Ød	A	LT	Z	L	Ød	A	LT	Z	L	Ød
18002	-					-					-					-					276	436.5	121.5	105	65
18003	329	304	64	50	28	329	304	64	82	42	329	334	94	82	42	329	334	94	106	1"3/8	329	377.5	-	-	-
18004	402					402					402					402					402				

PLB	EM 1"3/8 Z6					EP 65				
	A	LT	Z	L	Ød	A	LT	Z	L	Ød
18002	276	436.5	121.5	105	1"3/8	276	468	153	105	65
18003	329	377.5	-	-	-	329	409	-	-	-
18004	402					402				

PLB	~ Kg						
	EL C 28	EL C 42	EML 42	EML 1"3/8 Z6	EM 65	EM 1"3/8 Z6	EP 65
18002	-	-	-	-	221.0	221.0	230.0
18003	179.5	180.0	183.0	183.0	191.0	191.0	200.0
18004	181.5	182.0	185.0	185.0	-	-	-

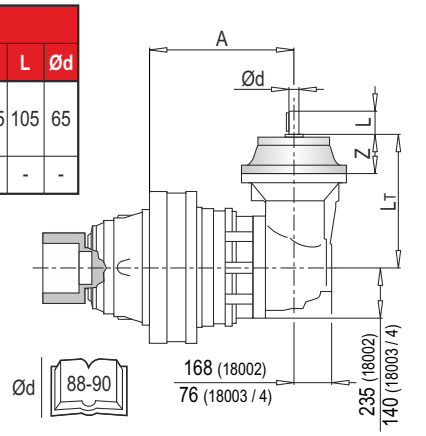

Ød 88-90

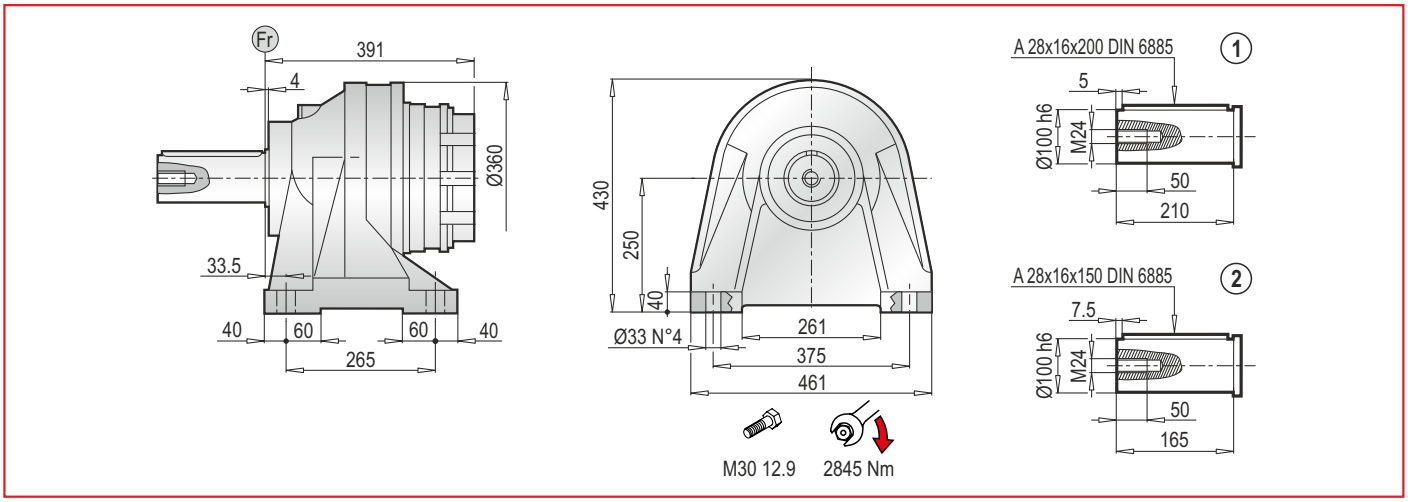

PL 18000 CPC - Elektrik Motor Adaptörleri (IEC) / Electrıc Motor Couplings (IEC) / Anbauvorrichtung Für Elektromotore (IEC) / Predisposizioni Per Motori Elettrici (IEC) / Adaptations Pour Moteurs Electriques (IEC) / Acoplamientos Para Motores Eléctricos (IEC)

PL	IEC 63			IEC 71			IEC 80			IEC 90			IEC 100		
	LT	Z	ØD	LT	Z	ØD	LT	Z	ØD	LT	Z	ØD	LT	Z	ØD
18002	-			-			-			-			-		
18003	486.5	36	140	486.5	36	160	506.5	56	200	506.5	56	200	516.5	66	250
18004	534.5			534.5			554.5			554.5			564.5		

PL	IEC 112			IEC 132			IEC 160			IEC 180		
	LT	Z	ØD	LT	Z	ØD	LT	Z	ØD	LT	Z	ØD
18002	-			-			509	118	350	509	118	350
18003	516.5	66	250	550.5	100	300	589.5	139		-		
18004	564.5			598.5			637.5			-		

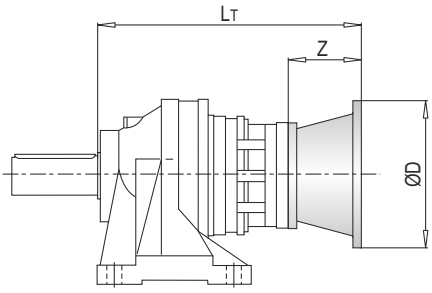

PL	IEC ~ Kg								
	63	71	80	90	100	112	132	160	180
18002	-	-	-	-	-	-	-	204	204
18003	199	199	201	201	202	202	206	216	-
18004	206	206	208	208	209	209	213	223	-

PL 18000 CPC - Giriş Milleri / Input Shafts / Antriebswellen / Alberi Entrata / Arbres D'entree / Ejes De Entrada

PL	EL C 28				EL C 42				EML 42				EML 1"3/8 Z6				EM 65				EM 1"3/8 Z6			
	LT	Z	L	Ød	LT	Z	L	Ød	LT	Z	L	Ød	LT	Z	L	Ød	LT	Z	L	Ød	LT	Z	L	Ød
18002	-				-				-				-				512.5	121.5	105	65	512.5	121.5	105	1"3/8
18003	514.5	64	50	28	514.5	64	82	42	544.5	94	82	42	544.5	94	106	1"3/8	585.5				585.5			
18004	562.5				562.5				592.5				592.5				-				-			

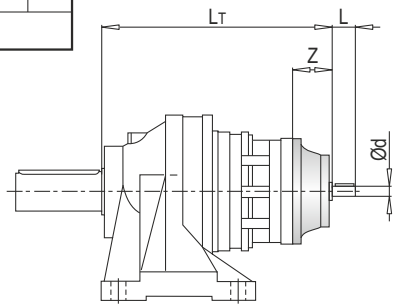

PL	EP 65			
	LT	Z	L	Ød
18002	544	153	105	65
18003	617			
18004	-			

PL	~ Kg						
	EL C 28	EL C 42	EML 42	EML 1"3/8 Z6	EM 65	EM 1"3/8 Z6	EP 65
18002	-	-	-	-	199.0	199.0	208.0
18003	199.5	200.0	203.0	203.0	211.0	211.0	220.0
18004	206.5	207.0	210.0	210.0	-	-	-

PL 18000 CPC - Sonsuz Dişlili Redüktör Adaptörleri (PMRV/PRV) / Worm Gearbox Adaptors (PMRV/PRV) / Anschluss Für Schneckengetriebe (PMRV/PRV) / Predisposizioni Per Riduttori A Vite Senza Fine (PMRV/PRV) / Adaptation Pour Reducteurs A Vis Sans Fin (PMRV/PRV) / Acoplamiento Para Reductores De Tornillo Sin Fin (PMRV/PRV)

PL	PMRV/PRV 050					PMRV/PRV 063					PMRV/PRV 075				
	LM	l	h	MA	G	LM	l	h	MA	G	LM	l	h	MA	G
18002	-					-					-				
18003	576	50	110	60	80	585.5	63	135	72	95	564.5	75	161	86	112.5
18004	624					633.5					612.5				

PL	PMRV/PRV 090					PMRV/PRV 110					PMRV/PRV 130				
	LM	l	h	MA	G	LM	l	h	MA	G	LM	l	h	MA	G
18002	-					529	110	237.5	127.5	160	536.5	130	227.5	147.5	180
18003	574.5	90	193	103	129.5	602					609.5				
18004	622.5					-					-				

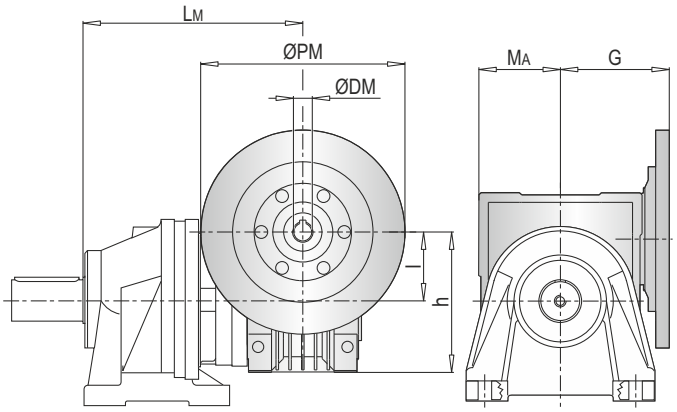

PL	PMRV/PRV ~ Kg					
	050	063	075	090	110	130
18002	-	-	-	-	228	245
18003	202	205.5	208	213	240	257
18004	209	212.5	215	220	-	-

ØPM
ØDM
105

PLB 18000 CPC - Elektrik Motor Adaptörleri (IEC) / Electric Motor Couplings (IEC) / Anbauvorrichtung Für Elektromotore (IEC) / Predisposizioni Per Motori Elettrici (IEC) / Adaptations Pour Moteurs Electriques (IEC) / Acoplamientos Para Motores Eléctricos (IEC)

PLB	IEC 63				IEC 71				IEC 80				IEC 90				IEC 100			
	A	LT	Z	ØD	A	LT	Z	ØD	A	LT	Z	ØD	A	LT	Z	ØD	A	LT	Z	ØD
18002	-				-				-				-				-			
18003	479	276	36	140	479	276	36	160	479	296	56	200	479	296	56	200	479	306	66	250
18004	552				552				552				552				552			

PLB	IEC 112				IEC 132				IEC 160				IEC 180			
	A	LT	Z	ØD	A	LT	Z	ØD	A	LT	Z	ØD	A	LT	Z	ØD
18002	-				-				426	433	118	350	426	433	118	350
18003	479	306	66	250	479	340	100	300	479	379	139		-			
18004	552				552				552				-			

PLB	IEC ~ Kg								
	63	71	80	90	100	112	132	160	180
18002	-	-	-	-	-	-	-	271	271
18003	224	224	226	226	227	227	231	241	-
18004	226	226	228	228	229	229	233	243	-

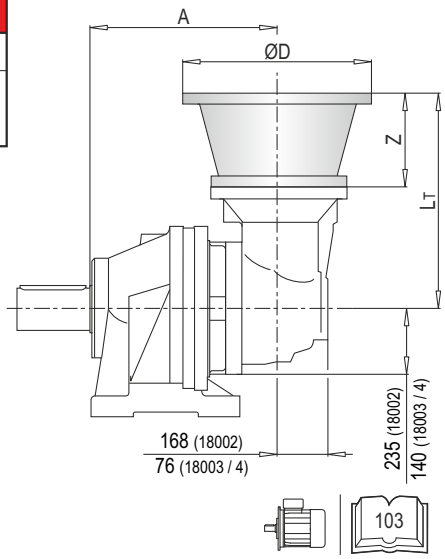

PLB 18000 CPC - Giriş Milleri / Input Shafts / Antriebswellen / Alberi Entrata / Arbres D'entree / Ejes De Entrada

PLB	EL C 28					EL C 42					EML 42					EML 1"3/8 Z6					EM 65				
	A	LT	Z	L	Ød	A	LT	Z	L	Ød	A	LT	Z	L	Ød	A	LT	Z	L	Ød	A	LT	Z	L	Ød
18002	-					-					-					-					426	436.5	121.5	105	65
18003	479	304	64	50	28	479	304	64	82	42	479	334	94	82	42	479	334	94	106	1"3/8	479	377.5			
18004	552					552					552					552					552		-	-	-

PLB	EM 1"3/8 Z6					EP 65				
	A	LT	Z	L	Ød	A	LT	Z	L	Ød
18002	426	436.5	121.5	105	1"3/8	426	468	153	105	65
18003	479	377.5				479	409			
18004	552		-	-	-	552		-	-	-

PLB	~ Kg						
	EL C 28	EL C 42	EML 42	EML 1"3/8 Z6	EM 65	EM 1"3/8 Z6	EP 65
18002	-	-	-	-	266.0	266.0	275.0
18003	224.5	225.0	228.0	228.0	236.0	236.0	245.0
18004	226.5	227.0	230.0	230.0	-	-	-

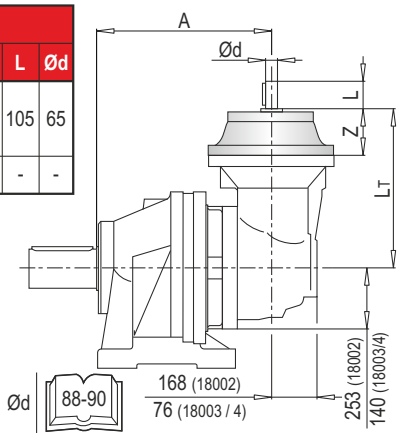

AKSESUARLAR / ACCESSORIES / ZUBEHÖR / ACCESSORI / ACCESSOIRES / ACCESORIOS

YZ
Pinyon / Pinion / Ritzel / Pignoni / Pignon / Piñones

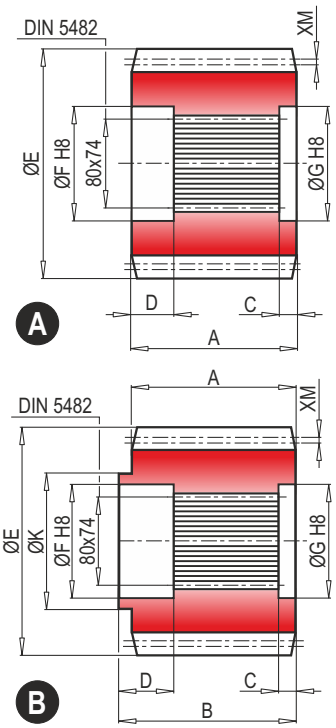

	Çıkış tipi Output type Abtriebs-version Versione Version Versión	M	Z	XM	A	B	C	D	E	F	G	K	Malzeme Material Material Materiale Matière Material	Kod Code Bestell-Nr. Codice Code Código
A	M	10	12	0	90	-	10	31	140	85	80	-	38NiCrMo4	1071.236.042
	M	10	14	0	90	-	10	31	160	85	80	-	38NiCrMo4	1071.238.042
	M	10	15	5	90	-	10	31	180	85	80	-	38NiCrMo4	1071.138.042
B	M	10	18	5	85	114	31	24	209.3	85	95	160	42CrMo4	1071.261.042
	M	12	14	3	90	105	15	31	194.5	85	95	130	38NiCrMo4	1071.269.042

FF
Sabitleme rondelası / Stop bottom plate / Endscheibe / Fondello di arresto / Bouchon de fermeture / Tapón de detención

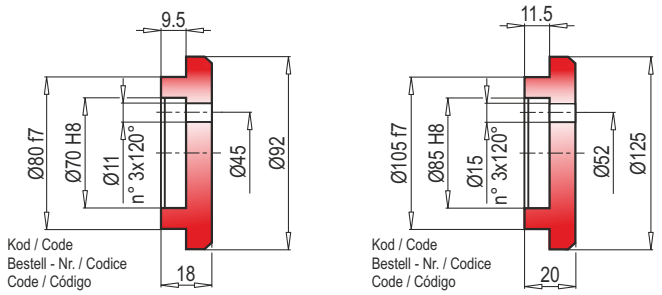

Kod / Code
Bestell - Nr. / Codice
Code / Código
1075.030.000

Kod / Code
Bestell - Nr. / Codice
Code / Código
1075.042.000

BS
Spline kaplin / Splined bushing / Innenverzahnte Buchse / Boccola scanalata / Moyeu cannelé / Casquillo ranurado

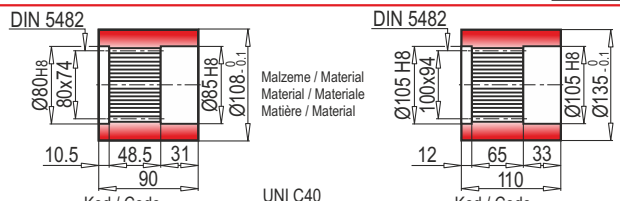

Malzeme / Material
Material / Materiale
Matière / Material

UNI C40
SAE 1040
DIN Ck40

MS Kod / Code
Bestell - Nr. / Codice
Code / Código
6171.103.076

PS Kod / Code
Bestell - Nr. / Codice
Code / Código
8171.112.041

KB
Spline mil / Splined rod / Außenverzahnte Welle / Barra scanalata / Arbre cannelé / Barra ranurada

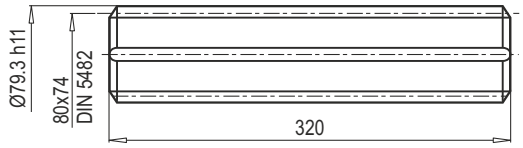

Malzeme / Material
Material / Materiale
Matière / Material

UNI 39NiCrMo3
Sertleşmiş ve tavlanmış / Hardened and tempered
Vergütet / Bonifié
Bonificado / Endurecido e temperado

Kod / Code
Bestell - Nr. / Codice
Code / Código
3071.406.042

FL
Flanş / Flange / Flansch / Flangia / Bride / Brida

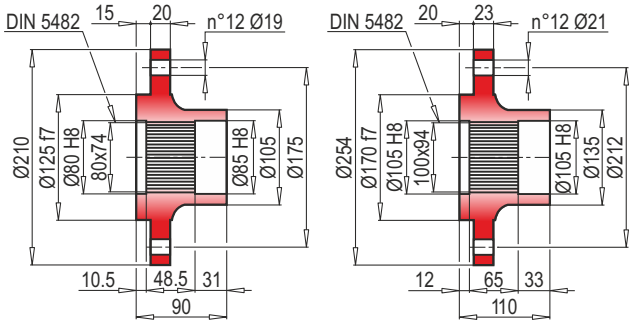

MS Kod / Code
Bestell - Nr. / Codice
Code / Código
6171.105.098

PS Kod / Code
Bestell - Nr. / Codice
Code / Código
8171.104.098

GA
Konik sıktırma / Shrink disc / Schrumpfscheibe / Giunto di attrito / Frette de serrage / Disco de contracción

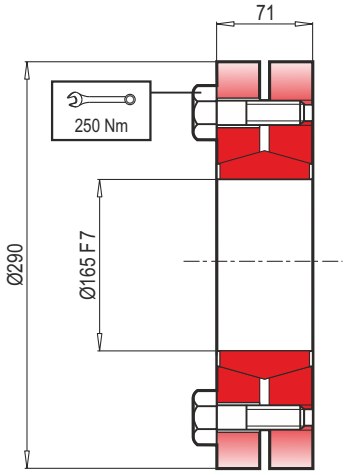

Maksimum moment
Max. torque
Max. Drehmoment
Coppia max.
Couple max.
Momento máx.
35 kNm

Kod / Code
Bestell - Nr. / Codice
Code / Código
5109.165.000

TR RADYAL YÜKLER (Fr)

Aşağıdaki grafikler istenilen $n_2$xh değerinin elde edilmesi için gerekli olan radyal yükleri ve K faktörlerini göstermektedir.

EN RADIAL LOADS (Fr)

The following curves show the radial loads and the K factors to obtain the required n2xh value.

DE RADIALLAST (Fr)

In den nachstehenden Diagrammen ist die Radiallast un der Koeffizient K dargestellt und kann mit dem gewünschten Wert $n_2$xh verglichen werden.

IT CARICHI RADIALI (Fr)

Nei diagrammi seguenti sono riportati i carichi radiali ei coefficienti K per rapportarli al valore $n_2$xh desiderato.

FR CHARGES RADIALES (Fr)

Dans les diagrammes suivants sont indiqués les charges radiales et les facteurs K de façon à obtenir la valeur $n_2$xh désirée.

ES CARGAS RADIALES (Fr)

En los siguientes diagramas se indican las cargas radiales y los coefici - entes K para obtener el valor requerido $n_2$xh.

M - CPC* - P

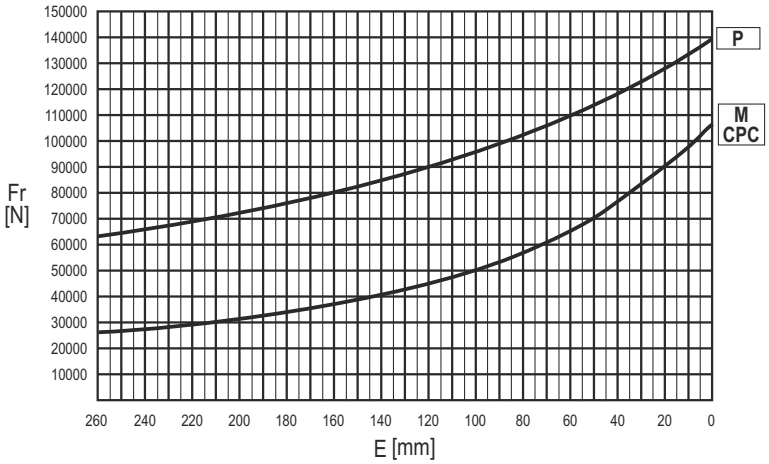

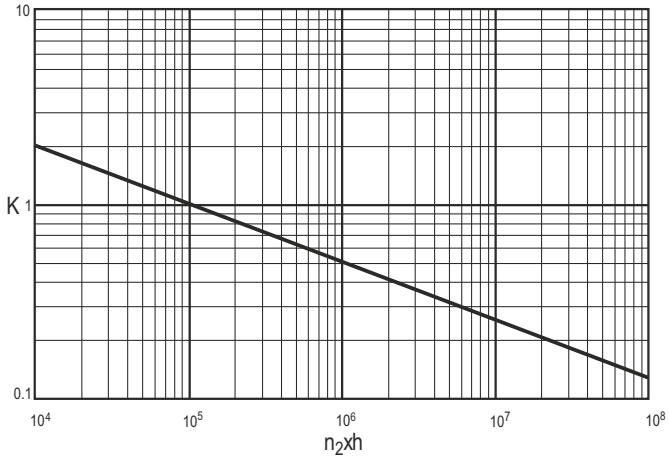

	n x h				
	10^5	10^4	10^6	10^7	10^8
M	Fr	Fr • K			
CPC*	Fr • 0.75	Fr • K • 0.75			

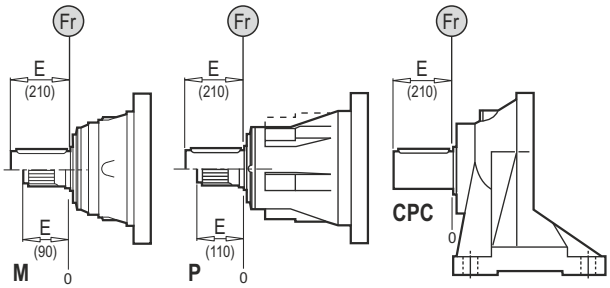

TR EKSENEL YÜKLER (Fa)

Tabloda yer alan eksenel yük değerleri, çıkış tipine ve uygulamanın yük yönüne göre değişir.

EN AXIAL LOADS (Fa)

The values of the axial loads in the table refer to the output versions and load direction of application.

DE AXIALLAST (Fa)

Die dargestellten Werte der Axiallast basieren auf der Version und der applizierten Lastrichtung.

IT CARICHI ASSIALI (Fa)

I valori dei carichi assiali indicati in tabella sono riferiti alle versioni e alla direzione di applicazione del carico.

FR CHARGES AXIALES (Fa)

Les valeurs des charges axiales indiquées dans le tableau se réfèrent aux versions et à la direction d'application de lacharge.

ES CARGAS AXIALES (Fa)

Los valores de las cargas axiales indicados en la tabla se refieren a las versiones y a la dirección de aplicación de la carga.

Fa [N]	M - CPC	P	
	45000	85000	←
	65000	85000	→

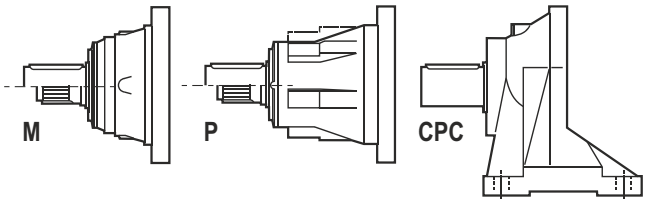

TEKNİK VERİLER / TECHNICAL DATA / TECHNISCHE DATEN / DATI TECNICI / DONNÉES TECHNIQUES / DATOS TÉCNICAS

	i_{ges}	M_2max (n1: 1400rpm) (Nm)
25001	4.00 ... 6.25	13020
25002	14.7 ... 43.8	17260
25003	55.4 ... 317.2	24010
25004	338.8 ... 1774.0	31690

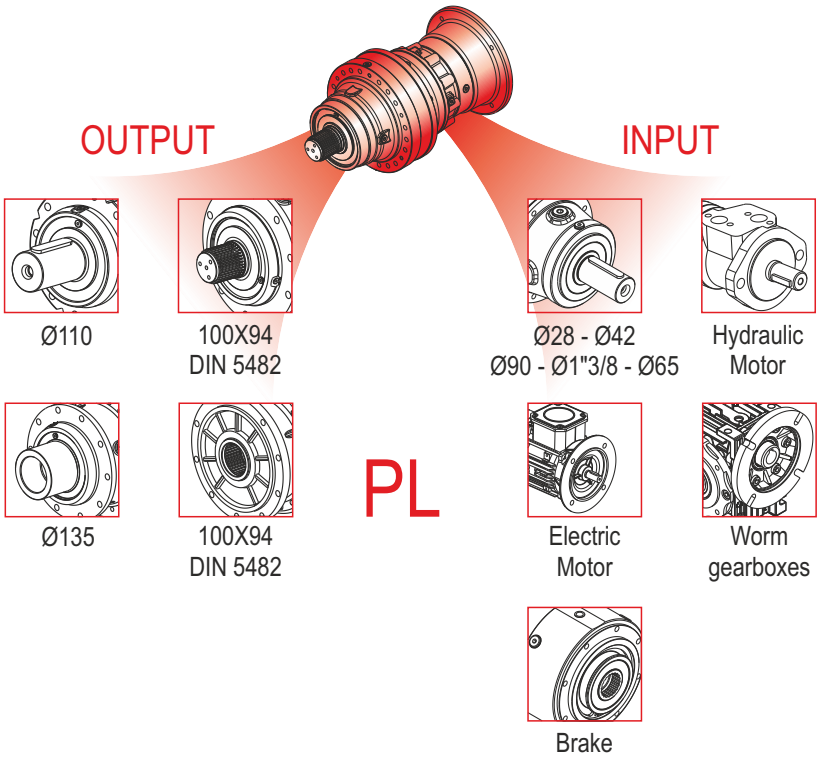

	i_{ges}	M_2max (n1: 1400rpm) (Nm)
25002	12.3 ... 29.2	15850
25003	50.7 ... 238.2	22750
25004	252.4 ... 1726.9	30120

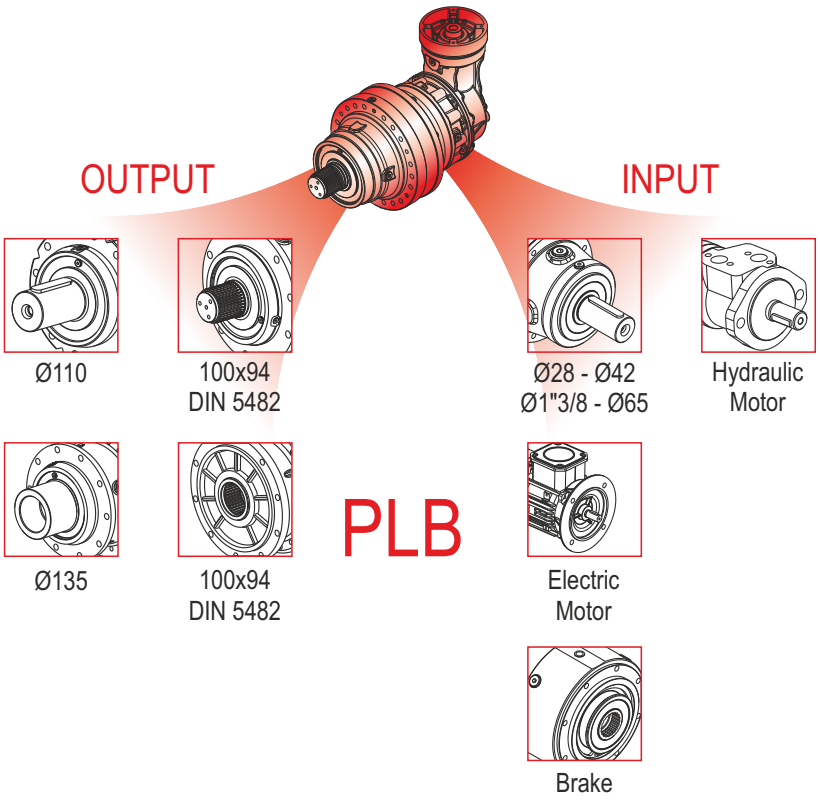

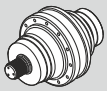	Pt [kW]	n_{1max} [min^{-1}]	i_{ges}	Mc [kNm] n_2 x h 10.000	n_2 x h 20.000	n_2 x h 50.000	n_2 x h 100.000	Giriş- Input - Antrieb - Entrata - Entrée - Entrada IEC (B5)	PMRV / PRV	EL - EML EM - EP - ET
PL 25001	50	1500	4.00 5.20 6.25	35.45 27.41 21.14	31.38 24.26 18.72	26.70 20.64 15.93	23.63 18.27 14.10	160 | 225 180 | 250 200	-	ET 90
PL 25002	30	2800	14.7 17.7 20.0 23.0 26.0 30.2 36.3 43.8	35.45 35.45 35.45 27.41 27.41 27.41 21.14 21.14	31.38 31.38 31.38 24.26 24.26 24.26 18.72 18.72	26.70 26.70 26.70 20.64 20.64 20.64 15.93 15.93	23.63 23.63 23.63 18.27 18.27 18.27 14.10 14.10	160 180 200	110 130	EM 65 EM 1"3/8 Z6 EP 65
PL 25003	20	2800	55.4 60.5 73.1 88.0 95.0 106.3 114.4 128.4 134.3 156.0 167.0 188.5 218.7 226.6 262.8 317.2	35.45 35.45 35.45 35.45 27.41 35.45 27.41 35.45 27.41 27.41 27.41 27.41 27.41 21.14 21.14 21.14	31.38 31.38 31.38 31.38 24.26 31.38 24.26 31.38 24.26 24.26 24.26 24.26 24.26 18.72 18.72 18.72	26.70 26.70 26.70 26.70 20.64 26.70 20.64 26.70 20.64 20.64 20.64 20.64 20.64 15.93 15.93 15.93	23.63 23.63 23.63 23.63 18.27 23.63 18.27 23.63 18.27 18.27 18.27 18.27 18.27 14.10 14.10 14.10	63 71 80 90 100 112 132 160 180	050 063 075 090 110 130	EL C 28 EL C 42 EML 42 EML 1"3/8 Z6 EM 65 EM 1"3/8 Z6 EP 65
PL 25004	15	2800	338.8 374.0 408.4 424.3 455.5 493.2 556.9 617.8 697.5 752.3 803.1 873.6 934.9 1013.4 1126.9 1272.4 1354.5 1476.0 1529.3 1774.0	35.45 35.45 35.45 35.45 35.45 35.45 35.45 35.45 35.45 27.38 27.38 27.38 27.38 27.38 27.38 27.38 21.14 27.38 21.14 21.14	31.38 31.38 31.38 31.38 31.38 31.38 31.38 31.38 31.38 24.24 24.24 24.24 24.24 24.24 24.24 24.24 18.72 24.24 18.72 18.72	26.70 26.70 26.70 26.70 26.70 26.70 26.70 26.70 26.70 20.62 20.62 20.62 20.62 20.62 20.62 20.62 15.93 20.62 15.93 15.93	23.63 23.63 23.63 23.63 23.63 23.63 23.63 23.63 23.63 18.26 18.26 18.26 18.26 18.26 18.26 18.26 14.10 18.26 14.10 14.10	63 71 80 90 100 112 132 160	050 063 075 090	EL C 28 EL C 42 EML 42 EML 1"3/8 Z6

	Pt [kW]	n_{1max} [min^{-1}]	i_{ges}	Mc [kNm]				Giriş- Input - Antrieb - Entrata - Entrée - Entrada	
				n_2 x h	n_2 x h	n_2 x h	n_2 x h		
				10.000	20.000	50.000	100.000	IEC (B5)	EL - EML EM - EP - ET
PLB 25002	30	2000	12.3 16.0 19.2 24.3 29.2	35.45 27.41 21.14 27.41 21.14	31.38 24.26 18.72 24.26 18.72	26.70 20.64 15.93 20.64 15.93	23.63 18.27 14.10 18.27 14.10	160 180 200	EM 65 EM 1"3/8 Z6 EP 65
PLB 25003	20	2800	50.7 61.2 69.1 79.6 89.8 96.4 104.2 125.4 141.6 164.2 197.4 238.2	35.45 35.45 35.45 27.41 27.41 35.45 27.41 27.41 27.41 27.41 21.14 21.14	31.38 31.38 31.38 24.26 24.26 31.38 24.26 24.26 24.26 24.26 18.72 18.72	26.70 26.70 26.70 20.64 20.64 26.70 20.64 20.64 20.64 20.64 15.93 15.93	23.63 23.63 23.63 18.27 18.27 23.63 18.27 18.27 18.27 18.27 14.10 14.10	80 90 100 112 132 160 180	EL C 28 EL C 42 EML 42 EML 1"3/8 Z6 EM 65 EM 1"3/8 Z6 EP 65
PLB 25004	15	2800	252.4 285.0 304.0 364.3 397.8 449.2 498.3 562.6 651.2 731.4 789.4 985.2 1190.5 1430.9 1726.9	35.45 35.45 35.45 35.45 35.45 35.45 35.45 35.45 27.41 27.41 35.45 27.41 27.41 21.14 21.14	31.38 31.38 31.38 31.38 31.38 31.38 31.38 31.38 24.26 24.26 31.38 24.26 24.26 18.72 18.72	26.70 26.70 26.70 26.70 26.70 26.70 26.70 26.70 20.64 20.64 26.70 20.64 20.64 15.93 15.93	23.63 23.63 23.63 23.63 23.63 23.63 23.63 23.63 18.27 18.27 23.63 18.27 18.27 14.10 14.10	80 90 100 112 132 160	EL C 28 EL C 42 EML 42 EML 1"3/8 Z6 EM 65 EM 1"3/8 Z6 EP 65

(n_2 x h = 20.000)

$M_{max} = M_C \times 2$

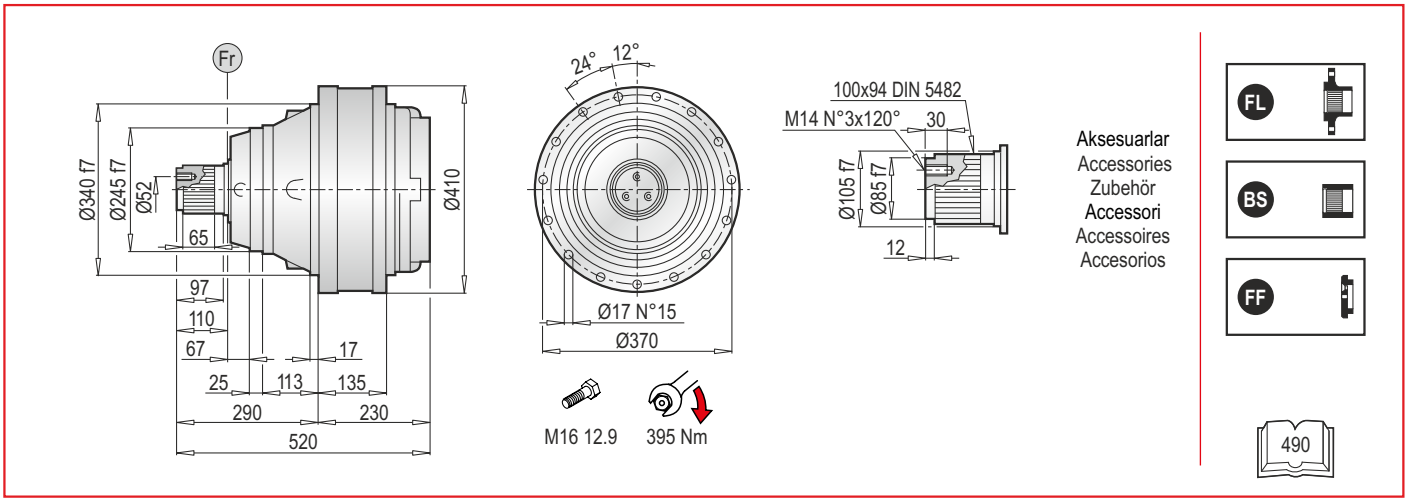

PL 25000 MS - Elektrik Motor Adaptörleri (IEC) / Electrıc Motor Couplings (IEC) / Anbauvorrichtung Für Elektromotore (IEC) / Predisposizioni Per Motori Elettrici (IEC) / Adaptations Pour Moteurs Electriques (IEC) / Acoplamientos Para Motores Eléctricos (IEC)

PL	IEC 63			IEC 71			IEC 80			IEC 90			IEC 100			IEC 112		
	LT	Z	ØD	LT	Z	ØD	LT	Z	ØD	LT	Z	ØD	LT	Z	ØD	LT	Z	ØD
25001	-			-			-			-			-			-		
25002	-			-			-			-			-			-		
25003	419.5	36	140	419.5	36	160	439.5	56	200	439.5	56	200	449.5	66	250	449.5	66	250
25004	467.5			467.5			487.5			487.5			497.5			497.5		

PL	IEC 132			IEC 160			IEC 180			IEC 200			IEC 225			IEC 250		
	LT	Z	ØD	LT	Z	ØD	LT	Z	ØD	LT	Z	ØD	LT	Z	ØD	LT	Z	ØD
25001	-			380	150	350	380	150	350	380	150	400	369	139	450	369	139	550
25002	-			442	118		442	118		472	148		-			-		
25003	483.5	100	300	522.5	139		522.5	139		-			-			-		
25004	531.5			570.5			-			-			-			-		

PL	IEC ~ Kg											
	63	71	80	90	100	112	132	160	180	200	225	250
25001	-	-	-	-	-	-	-	230	230	235	241	253
25002	-	-	-	-	-	-	-	234	234	244	-	-
25003	229	229	231	231	232	232	236	246	246	-	-	-
25004	235	235	237	237	238	238	242	252	-	-	-	-

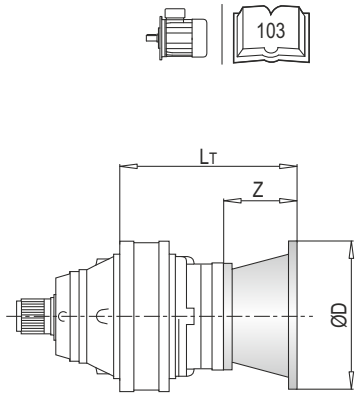

PL 25000 MS - Giriş Milleri / Input Shafts / Antriebswellen / Alberi Entrata / Arbres D'entree / Ejes De Entrada

PL	EL C 28				EL C 42				EML 42				EML 1"3/8 Z6				EM 65				EM 1"3/8 Z6			
	LT	Z	L	Ød	LT	Z	L	Ød	LT	Z	L	Ød	LT	Z	L	Ød	LT	Z	L	Ød	LT	Z	L	Ød
25001	-				-				-				-				-				-			
25002	-				-				-				-				445.5	121.5	105	65	445.5	121.5	105	1"3/8
25003	447.5	64	50	28	447.5	64	82	42	477.5	94	82	42	477.5	94	106	1"3/8	505				505			
25004	495.5				495.5				525.5				525.5				-				-			

PL	EP 65				ET 90			
	LT	Z	L	Ød	LT	Z	L	Ød
25001	-				401.5	171.5	170	90
25002	477	153	105	65	-			
25003	536.5				-			
25004	-				-			

PL	~ Kg							
	EL C 28	EL C 42	EML 42	EML 1"3/8 Z6	EM 65	EM 1"3/8 Z6	EP 65	ET 90
25001	-	-	-	-	-	-	-	233.0
25002	-	-	-	-	229.0	229.0	238.0	-
25003	229.5	230.0	233.0	233.0	241.0	241.0	250.0	-
25004	235.5	236.0	239.0	239.0	-	-	-	-

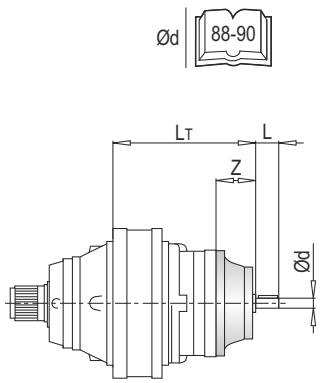

PL 25000 MS - Sonsuz Dişlili Redüktör Adaptörleri (PMRV/PRV) / Worm Gearbox Adaptors (PMRV/PRV) / Anschluss Für Schneckengetriebe (PMRV/PRV) / Predisposizioni Per Riduttori A Vite Senza Fine (PMRV/PRV) / Adaptation Pour Reducteurs A Vis Sans Fin (PMRV/PRV) / Acoplamiento Para Reductores De Tornillo Sin Fin (PMRV/PRV)

PL	PMRV/PRV 050					PMRV/PRV 063					PMRV/PRV 075				
	LM	l	h	MA	G	LM	l	h	MA	G	LM	l	h	MA	G
25001	-					-					-				
25002	-					-					-				
25003	505	50	110	60	80	514.5	63	135	72	95	493.5	75	161	86	112.5
25004	553					562.5					541.5				

PL	PMRV/PRV 090					PMRV/PRV 110					PMRV/PRV 130				
	LM	l	h	MA	G	LM	l	h	MA	G	LM	l	h	MA	G
25001	-					-					-				
25002	-					443	110	237.5	127.5	160	448.5	130	277.5	147.5	180
25003	503.5	90	193	103	129.5	571.5					523				
25004	551.5					-					-				

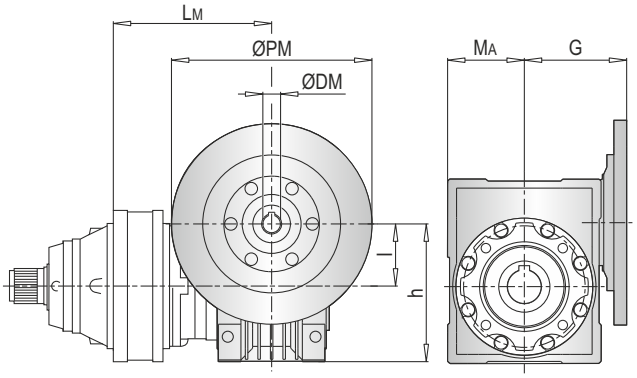

ØPM
ØDM
105

PL	PMRV/PRV ~ Kg					
	050	063	075	090	110	130
25001	-	-	-	-	-	-
25002	-	-	-	-	258	275
25003	232	235.5	238	243	270	287
25004	238	241.5	244	249	-	-

PLB 25000 MS - Elektrik Motor Adaptörleri (IEC) / Electric Motor Couplings (IEC) / Anbauvorrichtung Für Elektromotore (IEC) / Predisposizioni Per Motori Elettrici (IEC) / Adaptations Pour Moteurs Electriques (IEC) / Acoplamientos Para Motores Eléctricos (IEC)

PLB	IEC 80				IEC 90				IEC 100				IEC 112			
	A	LT	Z	ØD	A	LT	Z	ØD	A	LT	Z	ØD	A	LT	Z	ØD
25002	-				-				-				-			
25003	397	296	56	200	397	296	56	200	397	306	66	250	397	306	66	250
25004	470				470				470				470			

PLB	IEC 132				IEC 160				IEC 180				IEC 200			
	A	LT	Z	ØD	A	LT	Z	ØD	A	LT	Z	ØD	A	LT	Z	ØD
25002	-				295	433	118	350	295	433	118	350	295	463	148	400
25003	397	340	100	300	397	379	139		397	379	139		-			
25004	470				470				-				-			

PLB	IEC ~ Kg							
	80	90	100	112	132	160	180	200
25002	-	-	-	-	-	303	303	313
25003	256	256	257	257	261	271	271	-
25004	271	271	272	272	276	286	-	-

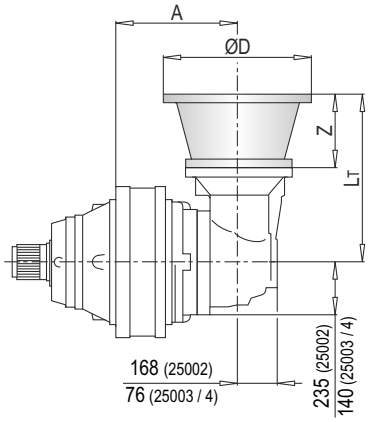

103

PLB 25000 MS - Giriş Milleri / Input Shafts / Antriebswellen / Alberi Entrata / Arbres D'entree / Ejes De Entrada

PLB	EL C 28					EL C 42					EML 42					EML 1"3/8 Z6					EM 65				
	A	LT	Z	L	Ød	A	LT	Z	L	Ød	A	LT	Z	L	Ød	A	LT	Z	L	Ød	A	LT	Z	L	Ød
25002	-					-					-					-					295	436.5	121.5	106	65
25003	397	304	64	50	28	397	304	64	82	42	397	334	94	82	42	397	334	94	106	1"3/8	397	361.5			
25004	470					470					470					470					470				

PLB	EM 1"3/8 Z6					EP 65				
	A	LT	Z	L	Ød	A	LT	Z	L	Ød
25002	295	436.5	121.5	105	1"3/8	295	468	153	105	65
25003	397	361.5				397	393			
25004	470					470				

PLB	~ Kg						
	EL C 28	EL C 42	EML 42	EML 1"3/8 Z6	EM 65	EM 1"3/8 Z6	EP 65
25002	-	-	-	-	298.0	298.0	307.0
25003	254.5	255.0	258.0	258.0	266.0	266.0	275.0
25004	269.5	270.0	273.0	273.0	281.0	281.0	290.0

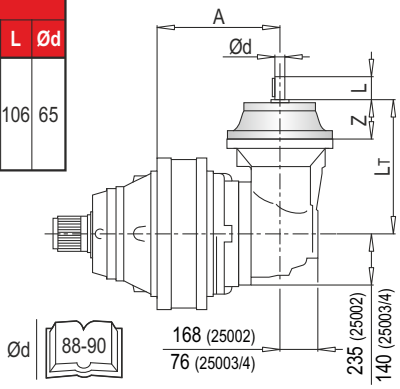

Ød 88-90

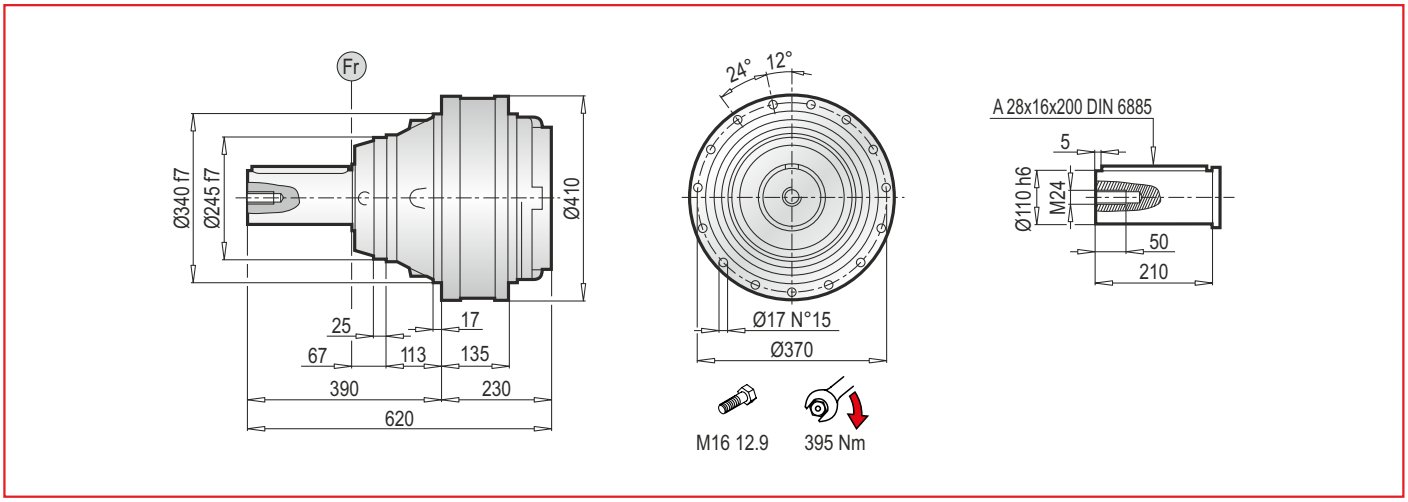

PL 25000 MC - Elektrik Motor Adaptörleri (IEC) / Electrıc Motor Couplings (IEC) / Anbauvorrichtung Für Elektromotore (IEC) / Predisposizioni Per Motori Elettrici (IEC) / Adaptations Pour Moteurs Electriques (IEC) / Acoplamientos Para Motores Eléctricos (IEC)

PL	IEC 63			IEC 71			IEC 80			IEC 90			IEC 100			IEC 112		
	LT	Z	ØD	LT	Z	ØD	LT	Z	ØD	LT	Z	ØD	LT	Z	ØD	LT	Z	ØD
25001	-			-			-			-			-			-		
25002	-			-			-			-			-			-		
25003	419.5	36	140	419.5	36	160	439.5	56	200	439.5	56	200	449.5	66	250	449.5	66	250
25004	467.5			467.5			487.5			487.5			497.5			497.5		

PL	IEC 132			IEC 160			IEC 180			IEC 200			IEC 225			IEC 250		
	LT	Z	ØD	LT	Z	ØD	LT	Z	ØD	LT	Z	ØD	LT	Z	ØD	LT	Z	ØD
25001	-			380	150	350	380	150	350	380	150	400	369	139	450	369	139	550
25002	-			442	118		442	118		472	148		-			-		
25003	483.5	100	300	522.5	139		522.5	139		-			-			-		
25004	531.5			570.5			-			-			-			-		

PL	IEC ~ Kg											
	63	71	80	90	100	112	132	160	180	200	225	250
25001	-	-	-	-	-	-	-	230	230	235	241	253
25002	-	-	-	-	-	-	-	234	234	244	-	-
25003	229	229	231	231	232	232	236	246	246	-	-	-
25004	235	235	237	237	238	238	242	252	-	-	-	-

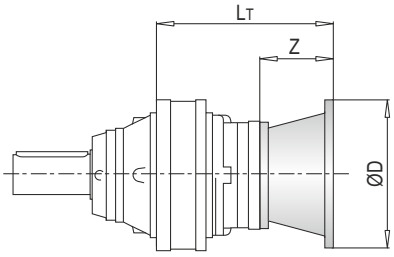

PL 25000 MC - Giriş Milleri / Input Shafts / Antriebswellen / Alberi Entrata / Arbres D'entree / Ejes De Entrada

PL	EL C 28				EL C 42				EML 42				EML 1"3/8 Z6				EM 65				EM 1"3/8 Z6			
	LT	Z	L	Ød	LT	Z	L	Ød	LT	Z	L	Ød	LT	Z	L	Ød	LT	Z	L	Ød	LT	Z	L	Ød
25001	-				-				-				-				-				-			
25002	-				-				-				-				445.5	121.5	105	65	445.5	121.5	105	1"3/8
25003	447.5	64	50	28	447.5	64	82	42	477.5	94	82	42	477.5	94	106	1"3/8	505				505			
25004	495.5				495.5				525.5				525.5				-				-			

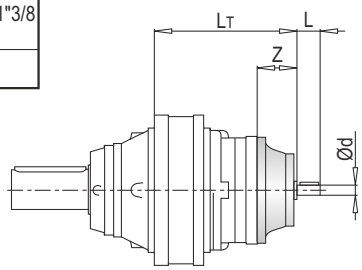

PL	EP 65				ET 90			
	LT	Z	L	Ød	LT	Z	L	Ød
25001	-				401.5	171.5	170	90
25002	477	153	105	65	-			
25003	536.5				-			
25004	-				-			

PL	~ Kg							
	EL C 28	EL C 42	EML 42	EML 1"3/8 Z6	EM 65	EM 1"3/8 Z6	EP 65	ET 90
25001	-	-	-	-	-	-	-	233.0
25002	-	-	-	-	229.0	229.0	238.0	-
25003	229.5	230.0	233.0	233.0	241.0	241.0	250.0	-
25004	235.5	236.0	239.0	239.0	-	-	-	-

PL 25000 MC - Sonsuz Dişlili Redüktör Adaptörleri (PMRV/PRV) / Worm Gearbox Adaptors (PMRV/PRV) / Anschluss Für Schneckengetriebe (PMRV/PRV) / Predisposizioni Per Riduttori A Vite Senza Fine (PMRV/PRV) / Adaptation Pour Reducteurs A Vis Sans Fin (PMRV/PRV) / Acoplamiento Para Reductores De Tornillo Sin Fin (PMRV/PRV)

PL	PMRV/PRV 050					PMRV/PRV 063					PMRV/PRV 075				
	LM	l	h	MA	G	LM	l	h	MA	G	LM	l	h	MA	G
25001	-					-					-				
25002	-					-					-				
25003	505	50	110	60	80	514.5	63	135	72	95	493.5	75	161	86	112.5
25004	553					562.5					541.5				

PL	PMRV/PRV 090					PMRV/PRV 110					PMRV/PRV 130				
	LM	l	h	MA	G	LM	l	h	MA	G	LM	l	h	MA	G
25001	-					-					-				
25002	-					443	110	237.5	127.5	160	448.5	130	277.5	147.5	180
25003	503.5	90	193	103	129.5	517.5					523				
25004	551.5					-					-				

PL	PMRV/PRV ~ Kg					
	050	063	075	090	110	130
25001	-	-	-	-	-	-
25002	-	-	-	-	258	275
25003	232	235.5	238	243	270	287
25004	238	241.5	244	249	-	-

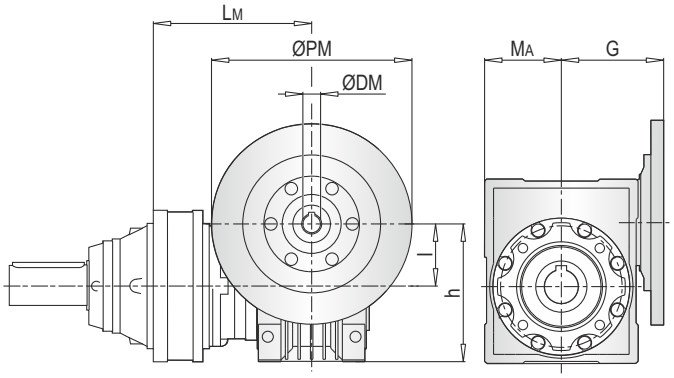

ØPM
ØDM
105

PLB 25000 MC - Elektrik Motor Adaptörleri (IEC) / Electric Motor Couplings (IEC) / Anbauvorrichtung Für Elektromotore (IEC) / Predisposizioni Per Motori Elettrici (IEC) / Adaptations Pour Moteurs Electriques (IEC) / Acoplamientos Para Motores Eléctricos (IEC)

PLB	IEC 80				IEC 90				IEC 100				IEC 112			
	A	LT	Z	ØD	A	LT	Z	ØD	A	LT	Z	ØD	A	LT	Z	ØD
25002	-				-				-				-			
25003	397	296	56	200	397	296	56	200	397	306	66	250	397	306	66	250
25004	470				470				470				470			

PLB	IEC 132				IEC 160				IEC 180				IEC 200			
	A	LT	Z	ØD	A	LT	Z	ØD	A	LT	Z	ØD	A	LT	Z	ØD
25002	-				295	433	118	350	295	433	118	350	295	463	148	400
25003	397	340	100	300	397	379	139		397	379	139		-			
25004	470				470				-				-			

PLB	IEC ~ Kg							
	80	90	100	112	132	160	180	200
25002	-	-	-	-	-	303	303	313
25003	256	256	257	257	261	271	271	-
25004	271	271	272	272	276	286	-	-

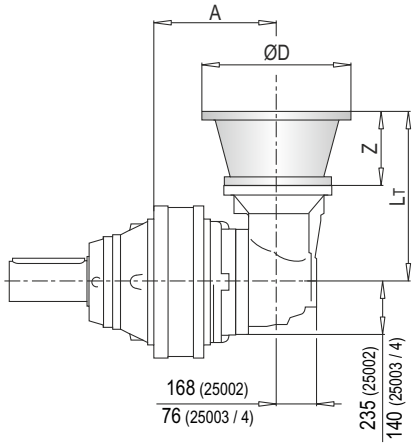

103

PLB 25000 MC - Giriş Milleri / Input Shafts / Antriebswellen / Alberi Entrata / Arbres D'entree / Ejes De Entrada

PLB	EL C 28					EL C 42					EML 42					EML 1"3/8 Z6					EM 65				
	A	LT	Z	L	Ød	A	LT	Z	L	Ød	A	LT	Z	L	Ød	A	LT	Z	L	Ød	A	LT	Z	L	Ød
25002	-					-					-					-					295	436.5	121.5	105	65
25003	397	304	64	50	28	397	304	64	82	42	397	334	94	82	42	397	334	94	106	1"3/8	397	361.5			
25004	470					470					470					470					470				

PLB	EM 1"3/8 Z6					EP 65				
	A	LT	Z	L	Ød	A	LT	Z	L	Ød
25002	295	436.5	121.5	105	1"3/8	295	468	153	105	65
25003	397	361.5				397	393			
25004	470					470				

PLB	~ Kg						
	EL C 28	EL C 42	EML 42	EML 1"3/8 Z6	EM 65	EM 1"3/8 Z6	EP 65
25002	-	-	-	-	298.0	298.0	307.0
25003	254.5	255.0	258.0	258.0	266.0	266.0	275.0
25004	269.5	270.0	273.0	273.0	281.0	281.0	290.0

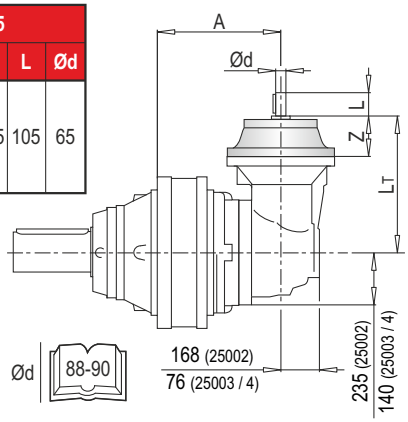

Ød 88-90

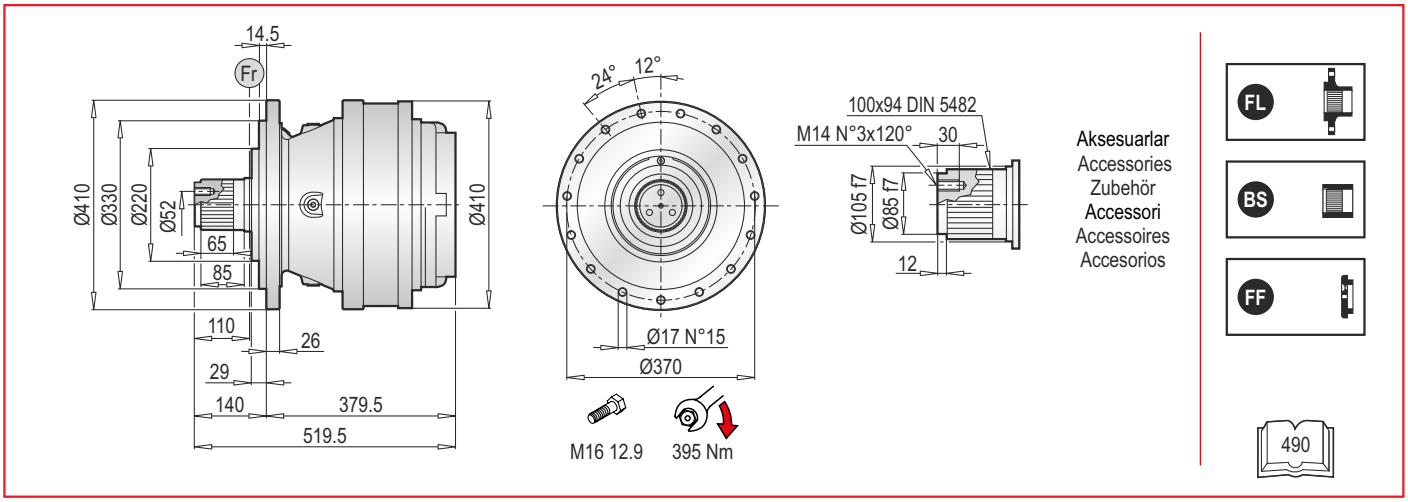

PL 25000 MSF - Elektrik Motor Adaptörleri (IEC) / Electric Motor Couplings (IEC) / Anbauvorrichtung Für Elektromotore (IEC) / Predisposizioni Per Motori Elettrici (IEC) / Adaptations Pour Moteurs Electriques (IEC) / Acoplamientos Para Motores Eléctricos (IEC)

PL	IEC 63			IEC 71			IEC 80			IEC 90			IEC 100			IEC 112		
	LT	Z	ØD	LT	Z	ØD	LT	Z	ØD	LT	Z	ØD	LT	Z	ØD	LT	Z	ØD
25001	-			-			-			-			-			-		
25002	-			-			-			-			-			-		
25003	554	36	140	554	36	160	574	56	200	574	56	200	584	66	250	584	66	250
25004	602			602			622			622			632			632		

PL	IEC 132			IEC 160			IEC 180			IEC 200			IEC 225			IEC 250		
	LT	Z	ØD	LT	Z	ØD	LT	Z	ØD	LT	Z	ØD	LT	Z	ØD	LT	Z	ØD
25001	-			527.5	148	350	527.5	148	350	527.5	148	400	518.5	139	450	526.5	147	550
25002	-			576.5	118		576.5	118		606.5			-			-		
25003	618	100	300	657	139		657	139		-			-			-		
25004	666			705			-			-			-			-		

PL	IEC ~ Kg											
	63	71	80	90	100	112	132	160	180	200	225	250
25001	-	-	-	-	-	-	-	256	256	261	267	279
25002	-	-	-	-	-	-	-	260	260	270	-	-
25003	255	255	257	257	258	258	262	272	272	-	-	-
25004	261	261	263	263	264	264	268	278	-	-	-	-

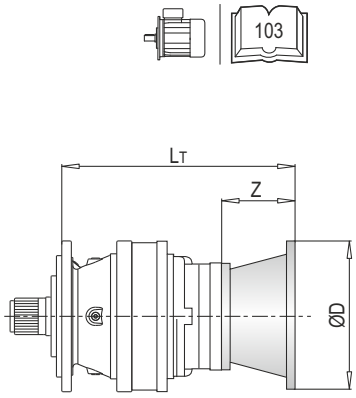

PL 25000 MSF - Giriş Milleri / Input Shafts / Antriebswellen / Alberi Entrata / Arbres D'entree / Ejes De Entrada

PL	EL C 28				EL C 42				EML 42				EML 1"3/8 Z6				EM 65				EM 1"3/8 Z6			
	LT	Z	L	Ød	LT	Z	L	Ød	LT	Z	L	Ød	LT	Z	L	Ød	LT	Z	L	Ød	LT	Z	L	Ød
25001	-				-				-				-				-				-			
25002	-				-				-				-				580	121.5	105	65	580	121.5	105	1"3/8
25003	582	64	50	28	582	64	82	42	612	94	82	42	612	94	106	1"3/8	653				653			
25004	630				630				660				660				-				-			

PL	EP 65				ET 90			
	LT	Z	L	Ød	LT	Z	L	Ød
25001	-				553.5	174	170	90
25002	611.5	153	105	65	-			
25003	684.5				-			
25004	-				-			

PL	~ Kg							
	EL C 28	EL C 42	EML 42	EML 1"3/8 Z6	EM 65	EM 1"3/8 Z6	EP 65	ET 90
25001	-	-	-	-	-	-	-	259
25002	-	-	-	-	255	255	264	-
25003	255.5	256	259	259	267	267	276	-
25004	261.5	262	265	265	-	-	-	-

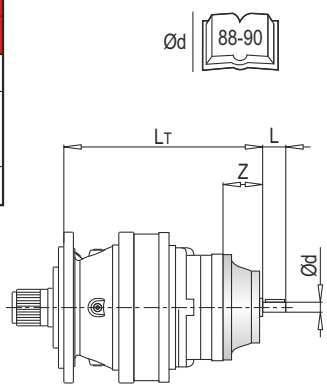

PL 25000 MSF - Sonsuz Dişlili Redüktör Adaptörleri (PMRV/PRV) / Worm Gearbox Adaptors (PMRV/PRV) / Anschluss Für Schneckengetriebe (PMRV/PRV) / Predisposizioni Per Riduttori A Vite Senza Fine (PMRV/PRV) / Adaptation Pour Reducteurs A Vis Sans Fin (PMRV/PRV) / Acoplamiento Para Reductores De Tornillo Sin Fin (PMRV/PRV)

PL	PMRV/PRV 050					PMRV/PRV 063					PMRV/PRV 075				
	LM	l	h	MA	G	LM	l	h	MA	G	LM	l	h	MA	G
25001	-					-					-				
25002	-					-					-				
25003	643.5	50	110	60	80	653	63	135	72	95	632	75	161	86	112.5
25004	691.5					701					680				

PL	PMRV/PRV 090					PMRV/PRV 110					PMRV/PRV 130				
	LM	l	h	MA	G	LM	l	h	MA	G	LM	l	h	MA	G
25001	-					-					-				
25002	-					596.5	110	237.5	127.5	160	604	130	277.5	147.5	180
25003	642	90	193	103	129.5	669.5					677				
25004	690					-					-				

PL	PMRV/PRV ~ Kg					
	050	063	075	090	110	130
25001	-	-	-	-	-	-
25002	-	-	-	-	284	301
25003	258	261.5	264	269	296	313
25004	264	267.5	270	275	-	-

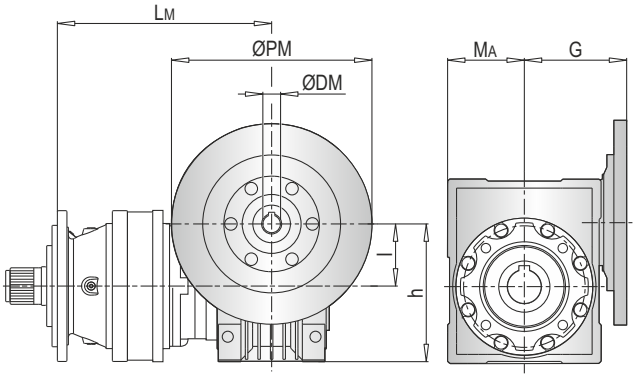

ØPM
ØDM
105

PLB 25000 MSF - Elektrik Motor Adaptörleri (IEC) / Electric Motor Couplings (IEC) / Anbauvorrichtung Für Elektromotore (IEC) / Predisposizioni Per Motori Elettrici (IEC) / Adaptations Pour Moteurs Electriques (IEC) / Acoplamientos Para Motores Eléctricos (IEC)

PLB	IEC 80				IEC 90				IEC 100				IEC 112			
	A	LT	Z	ØD	A	LT	Z	ØD	A	LT	Z	ØD	A	LT	Z	ØD
25002	-				-				-				-			
25003	546.5	296	56	200	546.5	296	56	200	546.5	306	66	250	546.5	306	66	250
25004	619.5				619.5				619.5				619.5			

PLB	IEC 132				IEC 160				IEC 180				IEC 200			
	A	LT	Z	ØD	A	LT	Z	ØD	A	LT	Z	ØD	A	LT	Z	ØD
25002	-				444.5	433	118	350	444.5	433	118	350	444.5	463	148	400
25003	546.5	340	100	300	546.5	379	139		546.5	379	139		-			
25004	619.5				619.5				-				-			

PLB	IEC ~ Kg							
	80	90	100	112	132	160	180	200
25002	-	-	-	-	-	329	329	339
25003	282	282	283	283	287	297	297	-
25004	297	297	298	298	302	312	-	-

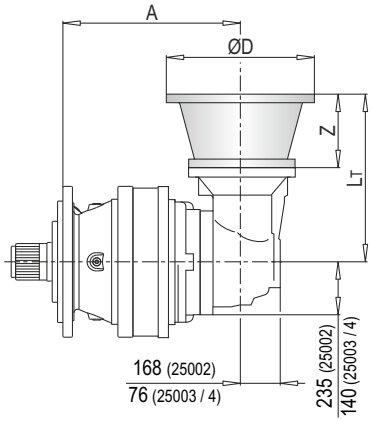

103

PLB 25000 MSF - Giriş Milleri / Input Shafts / Antriebswellen / Alberi Entrata / Arbres D'entree / Ejes De Entrada

PLB	EL C 28					EL C 42					EML 42					EML 1"3/8 Z6					EM 65				
	A	LT	Z	L	Ød	A	LT	Z	L	Ød	A	LT	Z	L	Ød	A	LT	Z	L	Ød	A	LT	Z	L	Ød
25002	-					-					-					-					444.5	436.5	121.5	105	65
25003	546.5	304	64	50	28	546.5	304	64	82	42	546.5	334	94	82	42	546.5	334	94	106	1"3/8	546.5	377.5			
25004	619.5					619.5					619.5					619.5					619.5				

PLB	EM 1"3/8 Z6					EP 65				
	A	LT	Z	L	Ød	A	LT	Z	L	Ød
25002	444.5	436.5	121.5	105	1"3/8	444.5	468	153	105	65
25003	546.5	377.5				546.5	409			
25004	619.5					619.5				

PLB	~ Kg						
	EL C 28	EL C 42	EML 42	EML 1"3/8 Z6	EM 65	EM 1"3/8 Z6	EP 65
25002	-	-	-	-	324	324	333
25003	280.5	281	284	284	292	292	301
25004	295.5	296	299	299	307	307	316

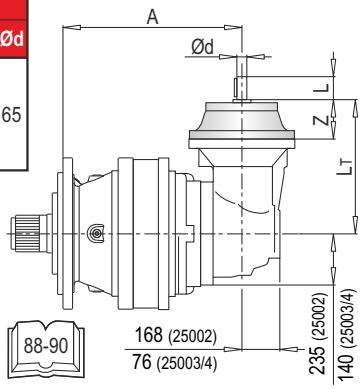

Ød 88-90

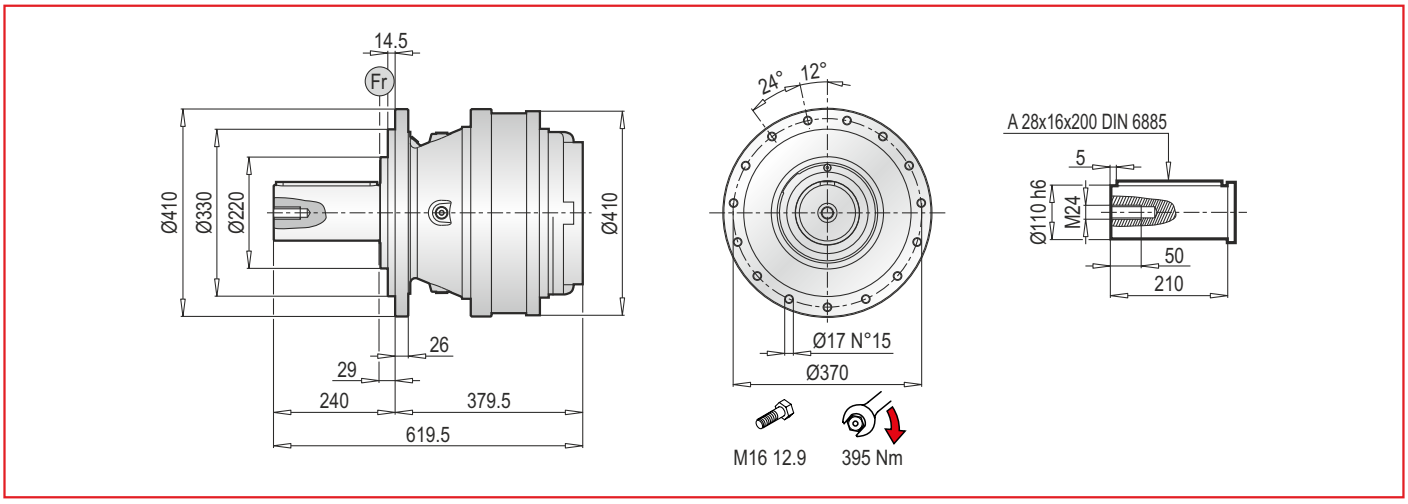

PL 25000 MCF - Elektrik Motor Adaptörleri (IEC) / Electrıc Motor Couplings (IEC) / Anbauvorrichtung Für Elektromotore (IEC) / Predisposizioni Per Motori Elettrici (IEC) / Adaptations Pour Moteurs Electriques (IEC) / Acoplamientos Para Motores Eléctricos (IEC)

PL	IEC 63			IEC 71			IEC 80			IEC 90			IEC 100			IEC 112		
	LT	Z	ØD	LT	Z	ØD	LT	Z	ØD	LT	Z	ØD	LT	Z	ØD	LT	Z	ØD
25001	-			-			-			-			-			-		
25002	-			-			-			-			-			-		
25003	554	36	140	554	36	160	574	56	200	574	56	200	584	66	250	584	66	250
25004	602			602			622			622			632			632		

PL	IEC 132			IEC 160			IEC 180			IEC 200			IEC 225			IEC 250		
	LT	Z	ØD	LT	Z	ØD	LT	Z	ØD	LT	Z	ØD	LT	Z	ØD	LT	Z	ØD
25001	-			527.5	148	350	527.5	148	350	527.5	148	400	518.5	139	450	526.5	147	550
25002	-			576.5	118		576.5	118		606.5			-			-		
25003	618	100	300	657	139		657	139		-			-			-		
25004	666			705			-			-			-			-		

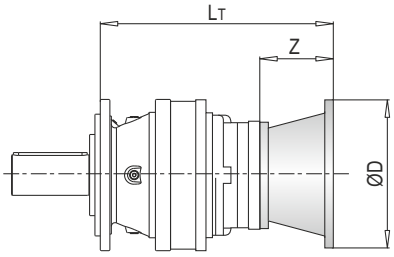

PL	IEC ~ Kg											
	63	71	80	90	100	112	132	160	180	200	225	250
25001	-	-	-	-	-	-	-	256	256	261	267	279
25002	-	-	-	-	-	-	-	260	260	270	-	-
25003	255	255	257	257	258	258	262	272	272	-	-	-
25004	261	261	263	263	264	264	268	278	-	-	-	-

PL 25000 MCF - Giriş Milleri / Input Shafts / Antriebswellen / Alberi Entrata / Arbres D'entree / Ejes De Entrada

PL	EL C 28				EL C 42				EML 42				EML 1"3/8 Z6				EM 65				EM 1"3/8 Z6			
	LT	Z	L	Ød	LT	Z	L	Ød	LT	Z	L	Ød	LT	Z	L	Ød	LT	Z	L	Ød	LT	Z	L	Ød
25001	-				-				-				-				-				-			
25002	-				-				-				-				580	121.5	105	65	580	121.5	105	1"3/8
25003	582	64	50	28	582	64	82	42	612	94	82	42	612	94	106	1"3/8	653				653			
25004	630				630				660				660				-				-			

PL	EP 65				ET 90			
	LT	Z	L	Ød	LT	Z	L	Ød
25001	-				553.5	174	170	90
25002	611.5	153	105	65	-			
25003	684.5				-			
25004	-				-			

PL	~ Kg							
	EL C 28	EL C 42	EML 42	EML 1"3/8 Z6	EM 65	EM 1"3/8 Z6	EP 65	ET 90
25001	-	-	-	-	-	-	-	259
25002	-	-	-	-	255	255	264	-
25003	255.5	256	259	259	267	267	276	-
25004	261.5	262	265	265	-	-	-	-

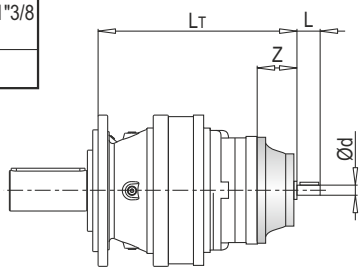

PL 25000 MCF - Sonsuz Dişlili Redüktör Adaptörleri (PMRV/PRV) / Worm Gearbox Adaptors (PMRV/PRV) / Anschluss Für Schneckengetriebe (PMRV/PRV) / Predisposizioni Per Riduttori A Vite Senza Fine (PMRV/PRV) / Adaptation Pour Reducteurs A Vis Sans Fin (PMRV/PRV) / Acoplamiento Para Reductores De Tornillo Sin Fin (PMRV/PRV)

PL	PMRV/PRV 050					PMRV/PRV 063					PMRV/PRV 075				
	LM	l	h	MA	G	LM	l	h	MA	G	LM	l	h	MA	G
25001	-					-					-				
25002	-					-					-				
25003	643.5	50	110	60	80	653	63	135	72	95	632	75	161	86	112.5
25004	691.5					701					680				

PL	PMRV/PRV 090					PMRV/PRV 110					PMRV/PRV 130				
	LM	l	h	MA	G	LM	l	h	MA	G	LM	l	h	MA	G
25001	-					-					-				
25002	-					596.5	110	237.5	127.5	160	604	130	277.5	147.5	180
25003	642	90	193	103	129.5	669.5					677				
25004	690					-					-				

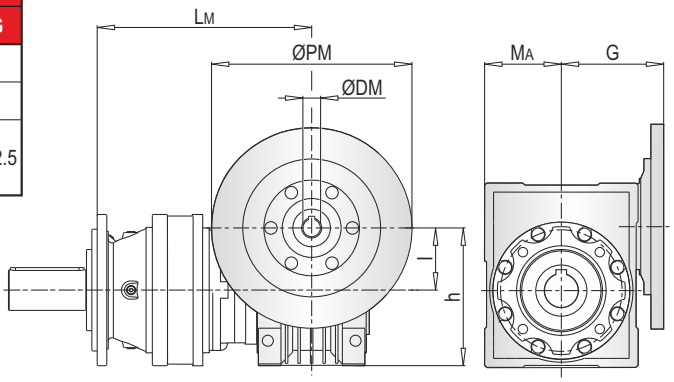

ØPM
ØDM
105

PL	PMRV/PRV ~ Kg					
	050	063	075	090	110	130
25001	-	-	-	-	-	-
25002	-	-	-	-	284	301
25003	258	261.5	264	269	296	313
25004	264	267.5	270	275	-	-

PLB 25000 MCF - Elektrik Motor Adaptörleri (IEC) / Electric Motor Couplings (IEC) / Anbauvorrichtung Für Elektromotore (IEC) / Predisposizioni Per Motori Elettrici (IEC) / Adaptations Pour Moteurs Electriques (IEC) / Acoplamientos Para Motores Eléctricos (IEC)

PLB	IEC 80				IEC 90				IEC 100				IEC 112			
	A	LT	Z	ØD	A	LT	Z	ØD	A	LT	Z	ØD	A	LT	Z	ØD
25002	-				-				-				-			
25003	546.5	296	56	200	546.5	296	56	200	546.5	306	66	250	546.5	306	66	250
25004	619.5				619.5				619.5				619.5			

PLB	IEC 132				IEC 160				IEC 180				IEC 200			
	A	LT	Z	ØD	A	LT	Z	ØD	A	LT	Z	ØD	A	LT	Z	ØD
25002	-				444.5	433	118	350	444.5	433	118	350	444.5	463	148	400
25003	546.5	340	100	300	546.5	379	139		546.5	379	139		-			
25004	619.5				619.5				-				-			

PLB	IEC ~ Kg							
	80	90	100	112	132	160	180	200
25002	-	-	-	-	-	329	329	339
25003	282	282	283	283	287	297	297	-
25004	297	297	298	298	302	312	-	-

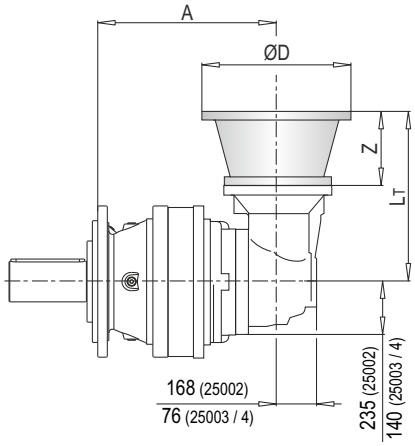

103

PLB 25000 MCF - Giriş Milleri / Input Shafts / Antriebswellen / Alberi Entrata / Arbres D'entree / Ejes De Entrada

PLB	EL C 28					EL C 42					EML 42					EML 1"3/8 Z6					EM 65				
	A	LT	Z	L	Ød	A	LT	Z	L	Ød	A	LT	Z	L	Ød	A	LT	Z	L	Ød	A	LT	Z	L	Ød
25002	-					-					-					-					444.5	436.5	121.5	105	65
25003	546.5	304	64	50	28	546.5	304	64	82	42	546.5	334	94	82	42	546.5	334	94	106	1"3/8	546.5	377.5			
25004	619.5					619.5					619.5					619.5					619.5				

PLB	EM 1"3/8 Z6					EP 65				
	A	LT	Z	L	Ød	A	LT	Z	L	Ød
25002	444.5	436.5	121.5	105	1"3/8	444.5	468	153	105	65
25003	546.5	377.5				546.5	409			
25004	619.5					619.5				

PLB	~ Kg						
	EL C 28	EL C 42	EML 42	EML 1"3/8 Z6	EM 65	EM 1"3/8 Z6	EP 65
25002	-	-	-	-	324	324	333
25003	280.5	281	284	284	292	292	301
25004	295.5	296	299	299	307	307	316

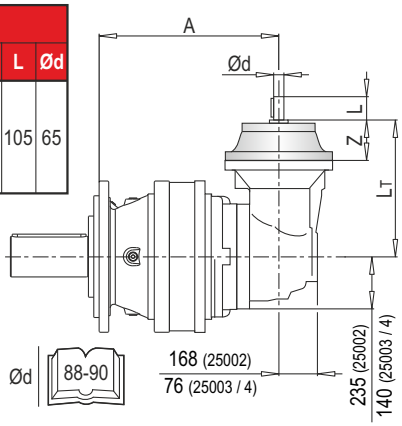

Ød 88-90

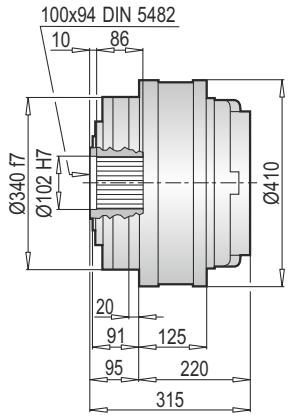

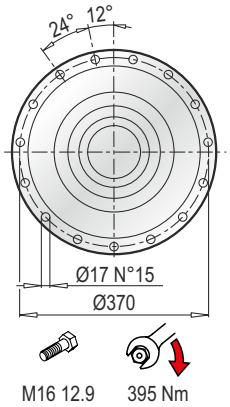

Aksesuarlar
Accessories
Zubehör
Accessori
Accessoires
Accesorios

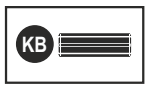

PL 25000 F - Elektrik Motor Adaptörleri (IEC) / Electrıc Motor Couplings (IEC) / Anbauvorrichtung Für Elektromotore (IEC) / Predisposizioni Per Motori Elettrici (IEC) / Adaptations Pour Moteurs Electriques (IEC) / Acoplamientos Para Motores Eléctricos (IEC)

PL	IEC 63			IEC 71			IEC 80			IEC 90			IEC 100			IEC 112		
	LT	Z	ØD	LT	Z	ØD	LT	Z	ØD	LT	Z	ØD	LT	Z	ØD	LT	Z	ØD
25001	-			-			-			-			-			-		
25002	-			-			-			-			-			-		
25003	409.5	36	140	409.5	36	160	429.5	56	200	429.5	56	200	439.5	66	250	439.5	66	250
25004	457.5			457.5			477.5			477.5			487.5			487.5		

PL	IEC 132			IEC 160			IEC 180			IEC 200			IEC 225			IEC 250		
	LT	Z	ØD	LT	Z	ØD	LT	Z	ØD	LT	Z	ØD	LT	Z	ØD	LT	Z	ØD
25001	-			370	150	350	370	150	350	370	150	400	359	139	450	359	139	550
25002	-			432	118		432	118		462	148		-			-		
25003	473.5	100	300	512.5	139		512.5	139		-			-			-		
25004	521.5			560.5			-			-			-			-		

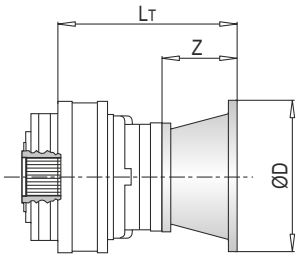

PL	IEC ~ Kg											
	63	71	80	90	100	112	132	160	180	200	225	250
25001	-	-	-	-	-	-	-	194	194	199	205	217
25002	-	-	-	-	-	-	-	198	198	208	-	-
25003	193	193	195	195	196	196	200	210	210	-	-	-
25004	199	199	201	201	202	202	206	216	-	-	-	-

PL 25000 F - Giriş Milleri / Input Shafts / Antriebswellen / Alberi Entrata / Arbres D'entree / Ejes De Entrada

PL	EL C 28				EL C 42				EML 42				EML 1"3/8 Z6				EM 65				EM 1"3/8 Z6			
	LT	Z	L	Ød	LT	Z	L	Ød	LT	Z	L	Ød	LT	Z	L	Ød	LT	Z	L	Ød	LT	Z	L	Ød
25001	-				-				-				-				-				-			
25002	-				-				-				-				435.5	121.5	105	65	435.5	121.5	105	1"3/8
25003	437.5	64	50	28	437.5	64	82	42	467.5	94	82	42	467.5	94	106	1"3/8	495				495			
25004	485.5				485.5				515.5				515.5				-				-			

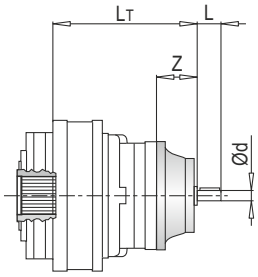

PL	EP 65				ET 90			
	LT	Z	L	Ød	LT	Z	L	Ød
25001	-				391.5	171.5	170	90
25002	467	153	105	65	-			
25003	526.5				-			
25004	-				-			

PL	~ Kg							
	EL C 28	EL C 42	EML 42	EML 1"3/8 Z6	EM 65	EM 1"3/8 Z6	EP 65	ET 90
25001	-	-	-	-	-	-	-	197.0
25002	-	-	-	-	193.0	193.0	202.0	-
25003	193.5	194.0	197.0	197.0	205.0	205.0	214.0	-
25004	199.5	200.0	203.0	203.0	-	-	-	-

PL 25000 F - Sonsuz Dişlili Redüktör Adaptörleri (PMRV/PRV) / Worm Gearbox Adaptors (PMRV/PRV) / Anschluss Für Schneckengetriebe (PMRV/PRV) / Predisposizioni Per Riduttori A Vite Senza Fine (PMRV/PRV) / Adaptation Pour Reducteurs A Vis Sans Fin (PMRV/PRV) / Acoplamiento Para Reductores De Tornillo Sin Fin (PMRV/PRV)

PL	PMRV/PRV 050					PMRV/PRV 063					PMRV/PRV 075				
	LM	l	h	MA	G	LM	l	h	MA	G	LM	l	h	MA	G
25001	-					-					-				
25002	-					-					-				
25003	484	50	110	60	80	493.5	63	135	72	95	472.5	75	161	86	112.5
25004	532					541.5					520.5				

PL	PMRV/PRV 090					PMRV/PRV 110					PMRV/PRV 130				
	LM	l	h	MA	G	LM	l	h	MA	G	LM	l	h	MA	G
25001	-					-					-				
25002	-					437	110	237.5	127.5	160	444.5	130	277.5	147.5	180
25003	482.5	90	193	103	129.5	510					517.5				
25004	530.5					-					-				

PL	PMRV/PRV ~ Kg					
	050	063	075	090	110	130
25001	-	-	-	-	-	-
25002	-	-	-	-	222	251
25003	196	199.5	202	207	234	257
25004	202	205.5	208	213	-	-

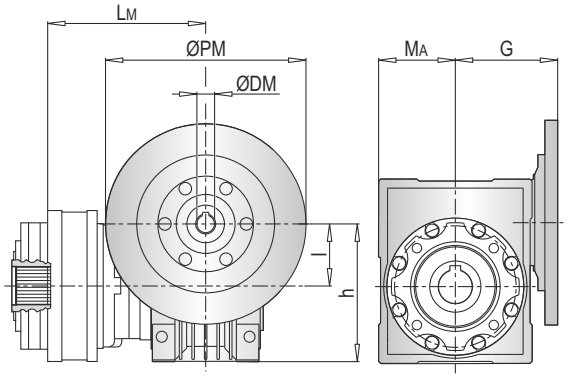

ØPM
ØDM
105

PLB 25000 F - Elektrik Motor Adaptörleri (IEC) / Electric Motor Couplings (IEC) /Anbauvorrichtung Für Elektromotore (IEC) / Predisposizioni Per Motori Elettrici (IEC) / Adaptations Pour Moteurs Electriques (IEC) /Acoplamientos Para Motores Eléctricos (IEC)

PLB	IEC 80				IEC 90				IEC 100				IEC 112			
	A	LT	Z	ØD	A	LT	Z	ØD	A	LT	Z	ØD	A	LT	Z	ØD
25002	-				-				-				-			
25003	387	296	56	200	387	296	56	200	387	306	66	250	387	306	66	250
25004	460				460				460				460			

PLB	IEC 132				IEC 160				IEC 180				IEC 200			
	A	LT	Z	ØD	A	LT	Z	ØD	A	LT	Z	ØD	A	LT	Z	ØD
25002	-				285	433	118	350	285	433	118	350	285	463	148	400
25003	387	340	100	300	387	379	139		387	379	139		-			
25004	460				460				-				-			

PLB	IEC ~ Kg							
	80	90	100	112	132	160	180	200
25002	-	-	-	-	-	266	266	276
25003	195	195	196	196	200	235	235	-
25004	201	201	202	202	206	250	-	-

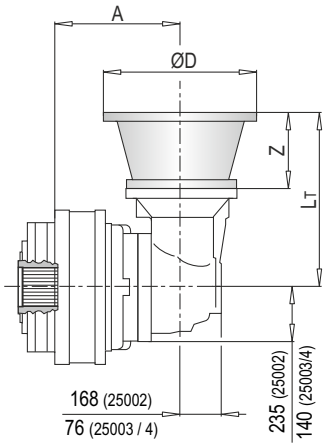

103

PLB 25000 F - Giriş Milleri / Input Shafts / Antriebswellen / Alberi Entrata / Arbres D'entree / Ejes De Entrada

PLB	EL C 28					EL C 42					EML 42					EML 1"3/8 Z6					EM 65				
	A	LT	Z	L	Ød	A	LT	Z	L	Ød	A	LT	Z	L	Ød	A	LT	Z	L	Ød	A	LT	Z	L	Ød
25002	-					-					-					-					285	436.5	121.5	105	65
25003	387	304	64	50	28	387	304	64	82	42	387	334	94	82	42	387	334	94	106	1"3/8	387	377.5			
25004	460					460					460					460					460				

PLB	EM 1"3/8 Z6					EP 65				
	A	LT	Z	L	Ød	A	LT	Z	L	Ød
25002	285	436.5	121.5	105	1"3/8	285	468	153	105	65
25003	387	377.5				387	409			
25004	460					460				

PLB	~ Kg						
	EL C 28	EL C 42	EML 42	EML 1"3/8 Z6	EM 65	EM 1"3/8 Z6	EP 65
25002	-	-	-	-	261.0	261.0	270.0
25003	218.5	219.0	222.0	222.0	230.0	230.0	239.0
25004	233.5	234.0	237.0	237.0	245.0	245.0	254.0

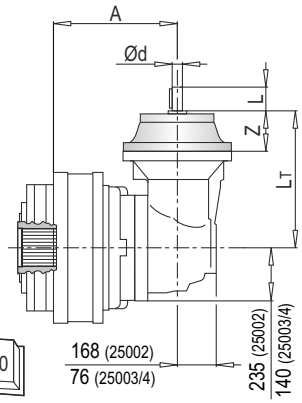

Ød 88-90

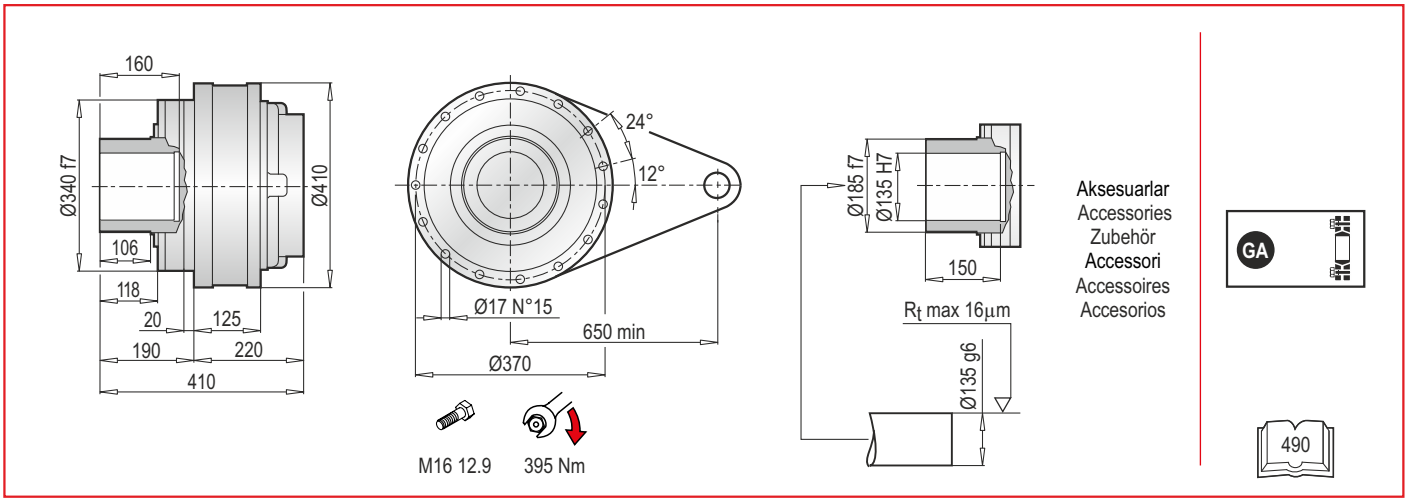

PL 25000 FS - Elektrik Motor Adaptörleri (IEC) / Electric Motor Couplings (IEC) /Anbauvorrichtung Für Elektromotore (IEC) / Predisposizioni Per Motori Elettrici (IEC) / Adaptations Pour Moteurs Electriques (IEC) /Acoplamientos Para Motores Eléctricos (IEC)

PL	IEC 63			IEC 71			IEC 80			IEC 90			IEC 100			IEC 112		
	LT	Z	ØD	LT	Z	ØD	LT	Z	ØD	LT	Z	ØD	LT	Z	ØD	LT	Z	ØD
25001	-			-			-			-			-			-		
25002	-			-			-			-			-			-		
25003	394.5	36	140	394.5	36	160	414.5	56	200	414.5	56	200	424.5	66	250	424.5	66	250
25004	442.5			442.5			462.5			462.5			472.5			472.5		

PL	IEC 132			IEC 160			IEC 180			IEC 200			IEC 225			IEC 250		
	LT	Z	ØD	LT	Z	ØD	LT	Z	ØD	LT	Z	ØD	LT	Z	ØD	LT	Z	ØD
25001	-			368	148	350	368	148	350	368	148	400	359	139	450	367	147	550
25002	-			417	118		417	118		447	148		-			-		
25003	458.5	100	300	497.5	139		497.5	139		-			-			-		
25004	506.5			545.5			-			-			-			-		

PL	IEC ~ Kg											
	63	71	80	90	100	112	132	160	180	200	225	250
25001	-	-	-	-	-	-	-	202	202	207	213	225
25002	-	-	-	-	-	-	-	206	206	216	-	-
25003	162	162	164	164	165	165	169	218	218	-	-	-
25004	189	189	191	191	192	192	196	224	-	-	-	-

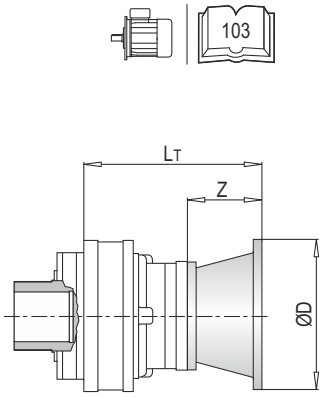

PL 25000 FS - Giriş Milleri / Input Shafts / Antriebswellen / Alberi Entrata / Arbres D'entree / Ejes De Entrada

PL	EL C 28				EL C 42				EML 42				EML 1"3/8 Z6				EM 65				EM 1"3/8 Z6			
	LT	Z	L	Ød	LT	Z	L	Ød	LT	Z	L	Ød	LT	Z	L	Ød	LT	Z	L	Ød	LT	Z	L	Ød
25001	-				-				-				-				-				-			
25002	-				-				-				-				420.5	121.5	105	65	420.5	121.5	105	1"3/8
25003	422.5	64	50	28	422.5	64	82	42	452.5	94	82	42	452.5	94	106	1"3/8	493.5				493.5			
25004	470.5				470.5				500.5				500.5				-				-			

PL	EP 65				ET 90			
	LT	Z	L	Ød	LT	Z	L	Ød
25001	-				394	174	170	90
25002	452	153	105	65	-			
25003	525				-			
25004	-				-			

PL	~ Kg							
	EL C 28	EL C 42	EML 42	EML 1"3/8 Z6	EM 65	EM 1"3/8 Z6	EP 65	ET 90
25001	-	-	-	-	-	-	-	205.0
25002	-	-	-	-	201.0	201.0	210.0	-
25003	201.5	202.0	205.0	205.0	213.0	213.0	222.0	-
25004	207.5	208.0	211.0	211.0	-	-	-	-

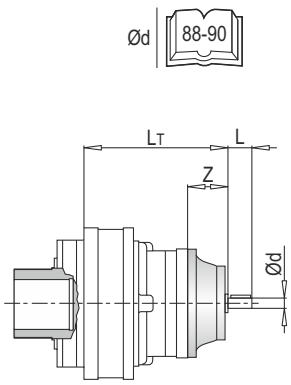

PL 25000 FS - Sonsuz Dişlili Redüktör Adaptörleri (PMRV/PRV) / Worm Gearbox Adaptors (PMRV/PRV) / Anschluss Für Schneckengetriebe (PMRV/PRV) / Predisposizioni Per Riduttori A Vite Senza Fine (PMRV/PRV) / Adaptation Pour Reducteurs A Vis Sans Fin (PMRV/PRV) / Acoplamiento Para Reductores De Tornillo Sin Fin (PMRV/PRV)

PL	PMRV/PRV 050					PMRV/PRV 063					PMRV/PRV 075				
	LM	l	h	MA	G	LM	l	h	MA	G	LM	l	h	MA	G
25001	-					-					-				
25002	-					-					-				
25003	484	50	110	60	80	493.5	63	135	72	95	472.5	75	161	86	112.5
25004	532					541.5					520.5				

PL	PMRV/PRV 090					PMRV/PRV 110					PMRV/PRV 130				
	LM	l	h	MA	G	LM	l	h	MA	G	LM	l	h	MA	G
25001	-					-					-				
25002	-					437	110	237.5	127.5	160	444.5	130	277.5	147.5	180
25003	482.5	90	193	103	129.5	510					517.5				
25004	530.5					-					-				

PL	PMRV/PRV ~ Kg					
	050	063	075	090	110	130
25001	-	-	-	-	-	-
25002	-	-	-	-	230	247
25003	204	207.5	210	215	242	259
25004	210	213.5	216	221	-	-

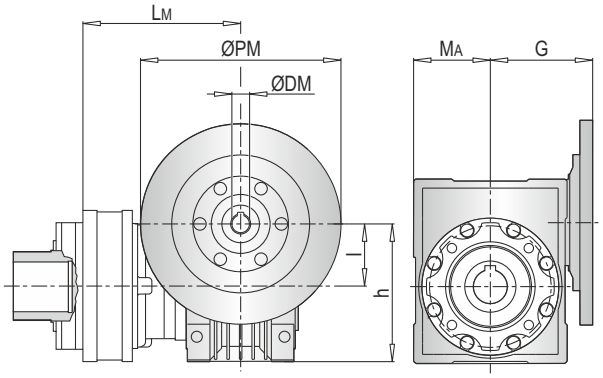

ØPM
ØDM
105

PLB 25000 FS - Elektrik Motor Adaptörleri (IEC) / Electric Motor Couplings (IEC) / Anbauvorrichtung Für Elektromotore (IEC) / Predisposizioni Per Motori Elettrici (IEC) / Adaptations Pour Moteurs Electriques (IEC) / Acoplamientos Para Motores Eléctricos (IEC)

PLB	IEC 80				IEC 90				IEC 100				IEC 112			
	A	LT	Z	ØD	A	LT	Z	ØD	A	LT	Z	ØD	A	LT	Z	ØD
25002	-				-				-				-			
25003	387	296	56	200	387	296	56	200	387	306	66	250	387	306	66	250
25004	460				460				460				460			

PLB	IEC 132				IEC 160				IEC 180				IEC 200			
	A	LT	Z	ØD	A	LT	Z	ØD	A	LT	Z	ØD	A	LT	Z	ØD
25002	-				285	433	118	350	285	433	118	350	285	463	148	400
25003	387	340	100	300	387	379	139		387	379	139		-			
25004	460				460				-				-			

PLB	IEC ~ Kg							
	80	90	100	112	132	160	180	200
25002	-	-	-	-	-	274	274	284
25003	228	228	229	229	233	243	243	-
25004	243	243	244	244	248	258	-	-

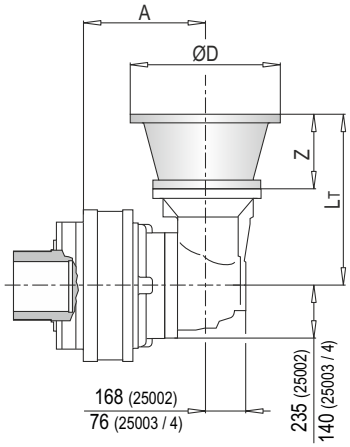

103

PLB 25000 FS - Giriş Milleri / Input Shafts / Antriebswellen / Alberi Entrata / Arbres D'entree / Ejes De Entrada

PLB	EL C 28					EL C 42					EML 42					EML 1"3/8 Z6					EM 65				
	A	LT	Z	L	Ød	A	LT	Z	L	Ød	A	LT	Z	L	Ød	A	LT	Z	L	Ød	A	LT	Z	L	Ød
25002	-					-					-					-					285	436.5	121.5	105	65
25003	387	304	64	50	28	387	304	64	82	42	387	334	94	82	42	387	334	94	106	1"3/8	387	377.5			
25004	460					460					460					460					460				

PLB	EM 1"3/8 Z6					EP 65				
	A	LT	Z	L	Ød	A	LT	Z	L	Ød
25002	285	436.5	121.5	105	1"3/8	285	468	153	105	65
25003	387	377.5				387	409			
25004	460					460				

PLB	~ Kg						
	EL C 28	EL C 42	EML 42	EML 1"3/8 Z6	EM 65	EM 1"3/8 Z6	EP 65
25002	-	-	-	-	269.0	269.0	278.0
25003	226.5	227.0	230.0	230.0	238.0	238.0	247.0
25004	241.5	242.0	245.0	245.0	253.0	253.0	262.0

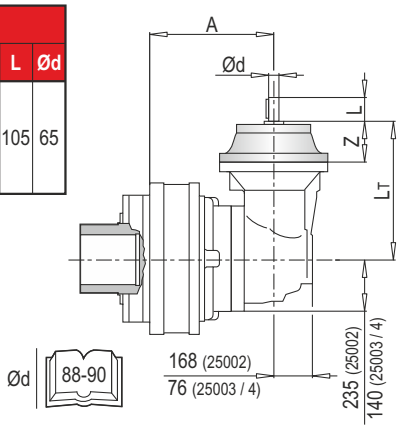

Ød 88-90

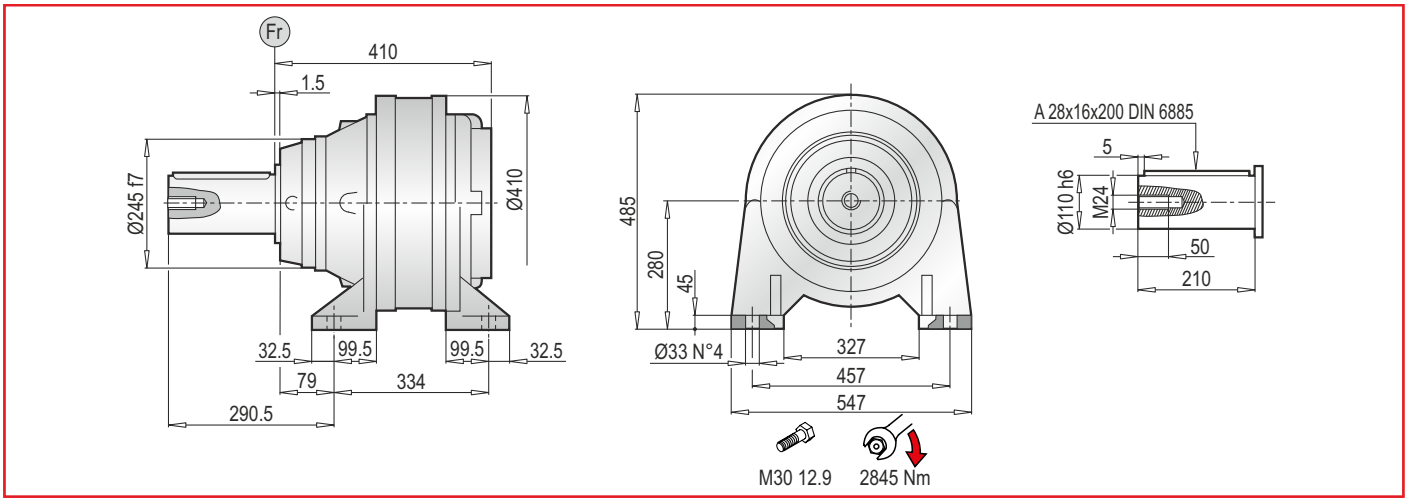

PL 25000 CPC - Elektrik Motor Adaptörleri (IEC) / Electrıc Motor Couplings (IEC) / Anbauvorrichtung Für Elektromotore (IEC) / Predisposizioni Per Motori Elettrici (IEC) / Adaptations Pour Moteurs Electriques (IEC) / Acoplamientos Para Motores Eléctricos (IEC)

PL	IEC 63			IEC 71			IEC 80			IEC 90			IEC 100			IEC 112		
	LT	Z	ØD	LT	Z	ØD	LT	Z	ØD	LT	Z	ØD	LT	Z	ØD	LT	Z	ØD
25001	-			-			-			-			-			-		
25002	-			-			-			-			-			-		
25003	584.5	36	140	584.5	36	160	604.5	56	200	604.5	56	250	614.5	66	250	614.5	66	250
25004	632.5			632.5			652.5			652.5			662.5			662.5		

PL	IEC 132			IEC 160			IEC 180			IEC 200			IEC 225			IEC 250		
	LT	Z	ØD	LT	Z	ØD	LT	Z	ØD	LT	Z	ØD	LT	Z	ØD	LT	Z	ØD
25001	-			558	148	350	558	148	350	558	148	400	549	139	450	557	147	550
25002	-			607	118		607	118		637	148		-			-		
25003	648.5	100	300	687.5	139		687.5	139		-			-			-		
25004	696.5			735.5			-			-			-			-		

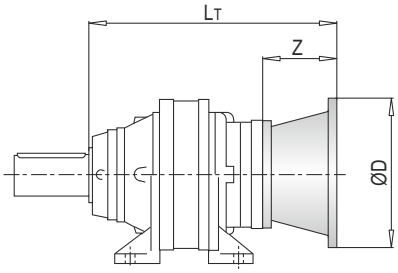

PL	IEC ~ Kg											
	63	71	80	90	100	112	132	160	180	200	225	250
25001	-	-	-	-	-	-	-	291	291	296	302	314
25002	-	-	-	-	-	-	-	295	295	305	-	-
25003	290	290	292	292	293	293	297	307	307	-	-	-
25004	296	296	298	298	299	299	303	313	-	-	-	-

PL 25000 CPC - Giriş Milleri / Input Shafts / Antriebswellen / Alberi Entrata / Arbres D'entree / Ejes De Entrada

PL	EL C 28				EL C 42				EML 42				EML 1"3/8 Z6				EM 65				EM 1"3/8 Z6			
	LT	Z	L	Ød	LT	Z	L	Ød	LT	Z	L	Ød	LT	Z	L	Ød	LT	Z	L	Ød	LT	Z	L	Ød
25001	-				-				-				-				-				-			
25002	-				-				-				-				610.5	121.5	105	65	610.5	121.5	105	1"3/8
25003	612.5	64	50	28	612.5	64	82	42	642.5	94	82	42	642.5	94	106	1"3/8	683.5				683.5			
25004	660.5				660.5				690.5				690.5				-				-			

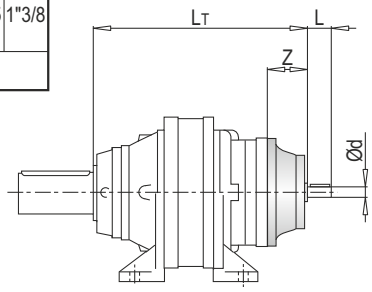

PL	EP 65				ET 90			
	LT	Z	L	Ød	LT	Z	L	Ød
25001	-				584	174	170	90
25002	642	153	105	65	-			
25003	715				-			
25004	-				-			

PL	~ Kg							
	EL C 28	EL C 42	EML 42	EML 1"3/8 Z6	EM 65	EM 1"3/8 Z6	EP 65	ET 90
25001	-	-	-	-	-	-	-	294.0
25002	-	-	-	-	299.0	290.0	299.0	-
25003	290.5	291.0	294.0	294.0	302.0	302.0	311.0	-
25004	296.5	297.0	300.0	300.0	-	-	-	-

PL 25000 CPC - Sonsuz Dişlili Redüktör Adaptörleri (PMRV/PRV) / Worm Gearbox Adaptors (PMRV/PRV) / Anschluss Für Schneckengetriebe (PMRV/PRV) / Predisposizioni Per Riduttori A Vite Senza Fine (PMRV/PRV) / Adaptation Pour Reducteurs A Vis Sans Fin (PMRV/PRV) / Acoplamiento Para Reductores De Tornillo Sin Fin (PMRV/PRV)

PL	PMRV/PRV 050					PMRV/PRV 063					PMRV/PRV 075				
	LM	l	h	MA	G	LM	l	h	MA	G	LM	l	h	MA	G
25001	-					-					-				
25002	-					-					-				
25003	674	50	110	60	80	683.5	63	135	72	95	662.5	75	161	86	112.5
25004	622					731.5					710.5				

PL	PMRV/PRV 90					PMRV/PRV 110					PMRV/PRV 130				
	LM	l	h	MA	G	LM	l	h	MA	G	LM	l	h	MA	G
25001	-					-					-				
25002	-					627	110	237.5	127.5	160	634.5	130	277.5	147.5	180
25003	672.5	90	193	103	129.5	700					707.5				
25004	720.5					-					-				

PL	PMRV/PRV ~ Kg					
	050	063	075	090	110	130
25001	-	-	-	-	-	-
25002	-	-	-	-	319	336
25003	293	296.5	299	304	331	348
25004	299	302.5	305	310	-	-

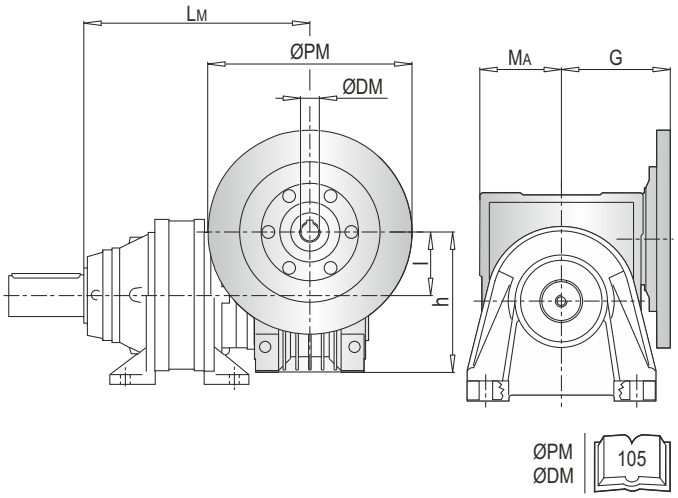

PLB 25000 CPC - Elektrik Motor Adaptörleri (IEC) / Electric Motor Couplings (IEC) / Anbauvorrichtung Für Elektromotore (IEC) / Predisposizioni Per Motori Elettrici (IEC) / Adaptations Pour Moteurs Electriques (IEC) / Acoplamientos Para Motores Eléctricos (IEC)

PLB	IEC 80				IEC 90				IEC 100				IEC 112			
	A	LT	Z	ØD	A	LT	Z	ØD	A	LT	Z	ØD	A	LT	Z	ØD
25002	-				-				-				-			
25003	577	296	56	200	577	296	56	200	577	306	66	250	577	306	66	250
25004	650				650				650				650			

PLB	IEC 132				IEC 160				IEC 180				IEC 200			
	A	LT	Z	ØD	A	LT	Z	ØD	A	LT	Z	ØD	A	LT	Z	ØD
25002	-				475	433	118	350	475	433	118	350	475	463	148	400
25003	577	340	100	300	577	379	139		577	379	139		-			
25004	650				650				-				-			

PLB	IEC ~ Kg							
	80	90	100	112	132	160	180	200
25002	-	-	-	-	-	366	366	376
25003	319	319	320	320	324	334	334	-
25004	334	334	335	335	339	349	-	-

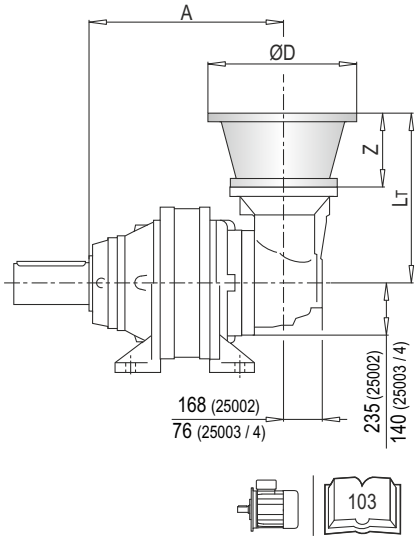

PLB 25000 CPC - Giriş Milleri / Input Shafts / Antriebswellen / Alberi Entrata / Arbres D'entree / Ejes De Entrada

PLB	EL C 28					EL C 42					EML 42					EML 1"3/8 Z6					EM 65				
	A	LT	Z	L	Ød	A	LT	Z	L	Ød	A	LT	Z	L	Ød	A	LT	Z	L	Ød	A	LT	Z	L	Ød
25002	-					-					-					-					475	436.5	121.5	105	65
25003	577	304	64	50	28	577	304	64	82	42	577	334	94	82	42	577	334	94	106	1"3/8	577	377.5			
25004	650					650					650					650					650				

PLB	EM 1"3/8 Z6					EP 65				
	A	LT	Z	L	Ød	A	LT	Z	L	Ød
25002	475	436.5	121.5	105	1"3/8	475	468	153	105	65
25003	577	377.5				577	409			
25004	650					650				

PLB	~ Kg						
	EL C 28	EL C 42	EML 42	EML 1"3/8 Z6	EM 65	EM 1"3/8 Z6	EP 65
25002	-	-	-	-	361.0	361.0	370.0
25003	317.5	318.0	321.0	321.0	329.0	329.0	338.0
25004	332.5	333.0	336.0	336.0	344.0	344.0	353.0

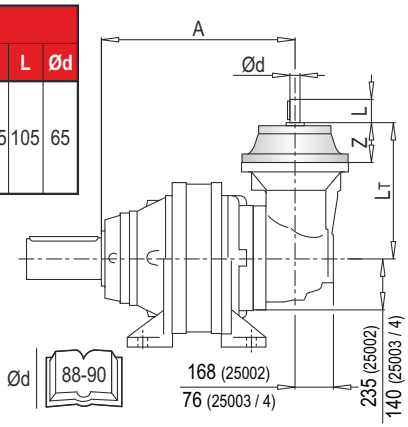

AKSESUARLAR / ACCESSORIES / ZUBEHÖR / ACCESSORI / ACCESSOIRES / ACCESORIOS

BS

Spline kaplin / Splined bushing / Innenverzahnte Buchse
Boccola scanalata / Moyeu cannelé / Casquillo ranurado

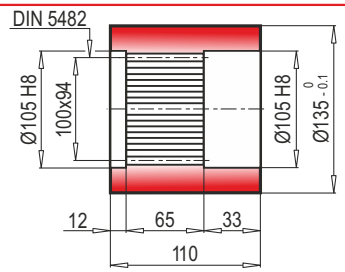

Malzeme / Material
Material / Materiale
Matière / Material
UNI C40
SAE 1040
DIN Ck40

Kod / Code
Bestell - Nr. / Codice
Code / Código
8171.112.041

KB

Spline mil / Splined rod / Außenverzahnte Welle
Barra scanalata / Arbre cannelé / Barra ranurada

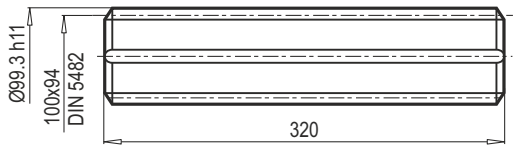

Malzeme / Material
Material / Materiale
Matière / Material

UNI 39NiCrMo3
Sertleşmiş ve tavlanmış / Hardened and tempered
Vergütet / Bonifié
Bonificado / Endurecido e temperado

Kod / Code
Bestell - Nr. / Codice
Code / Código
3071.407.042

FL

Flanş / Flange / Flansch
Flangia / Bride / Brida

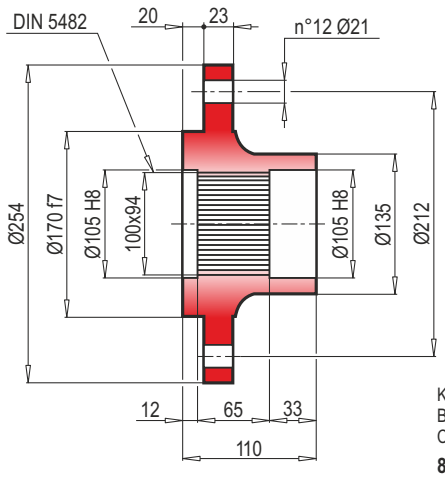

Kod / Code
Bestell - Nr. / Codice
Code / Código
8171.104.098

GA

Konik sıktırma / Shrink disc / Schrumpfscheibe
Giunto di attrito / Frette de serrage / Disco de contracción

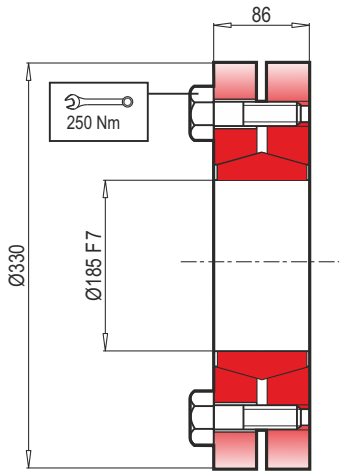

Maksimum moment
Max. torque
Max. Drehmoment
Coppia max.
Couple max.
Momento máx.
52 kNm

Kod / Code
Bestell - Nr. / Codice
Code / Código
5109.185.000

FF

Sabitleme rondelası / Stop bottom plate
Endscheibe / Fondello di arresto
Bouchon de fermeture / Tapón de detención

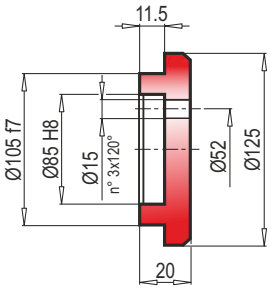

Kod / Code
Bestell - Nr. / Codice
Code / Código
1075.042.000

TR RADYAL YÜKLER (Fr)

Aşağıdaki grafikler istenilen $n_2$xh değerinin elde edilmesi için gerekli olan radyal yükleri ve K faktörlerini göstermektedir.

EN RADIAL LOADS (Fr)

The following curves show the radial loads and the K factors to obtain the required n2xh value.

DE RADIALLAST (Fr)

In den nachstehenden Diagrammen ist die Radiallast un der Koeffizient K dargestellt und kann mit dem gewünschten Wert $n_2$xh verglichen werden.

IT CARICHI RADIALI (Fr)

Nei diagrammi seguenti sono riportati i carichi radiali e i coefficienti K per rapportarli al valore $n_2$xh desiderato.

FR CHARGES RADIALES (Fr)

Dans les diagrammes suivants sont indiqués les charges radiales et les facteurs K de façon à obtenir la valeur $n_2$xh désirée.

ES CARGAS RADIALES (Fr)

En los siguientes diagramas se indican las cargas radiales y los coefici - entes K para obtener el valor requerido $n_2$xh.

M - P - CPC*

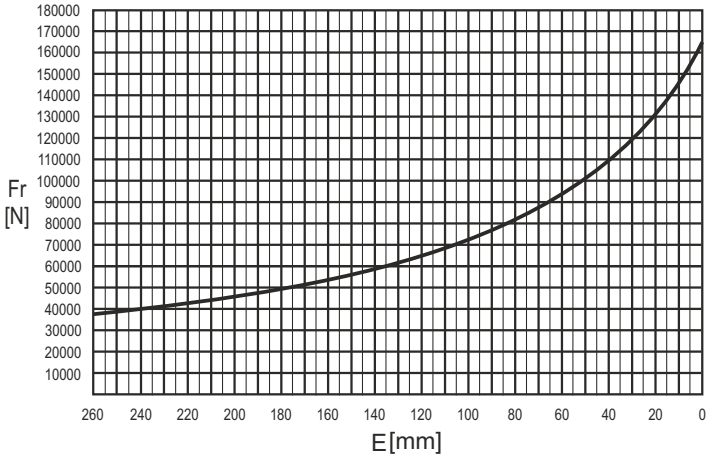

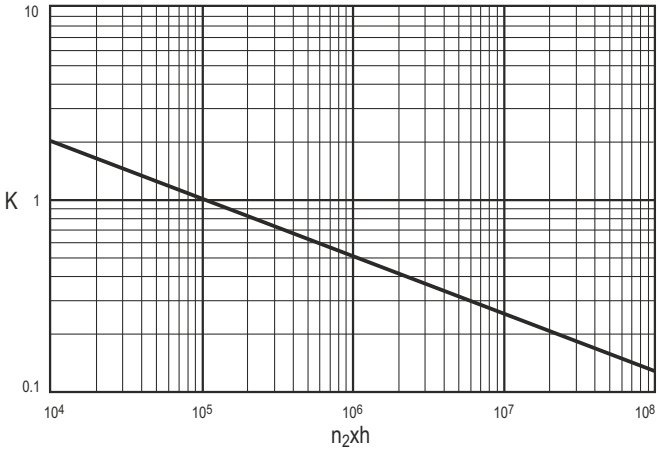

	n x h				
	10^5	10^4	10^6	10^7	10^8
M	Fr	Fr • K			
CPC*	Fr • 0.75	Fr • K • 0.75			

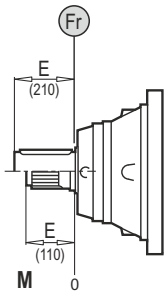

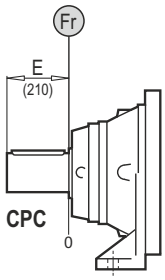

TR EKSENEL YÜKLER (Fa)

Tabloda yer alan eksenel yük değerleri, çıkış tipine ve uygulamanın yük yönüne göre değişir.

EN AXIAL LOADS (Fa)

The values of the axial loads in the table refer to the output versions and load direction of application.

DE AXIALLAST (Fa)

Die dargestellten Werte der Axiallast basieren auf der Version und der applizierten Lastrichtung.

IT CARICHI ASSIALI (Fa)

I valori dei carichi assiali indicati in tabella sono riferiti alle versioni e alla direzione di applicazione del carico.

FR CHARGES AXIALES (Fa)

Les valeurs des charges axiales indiquées dans le tableau se réfèrent aux versions et à la direction d'application de lacharge.

ES CARGAS AXIALES (Fa)

Los valores de las cargas axiales indicados en la tabla se refieren a las versiones y a la dirección de aplicación de la carga.

Fa [N]	M	CPC	
	75000	75000	←
	95000	95000	→

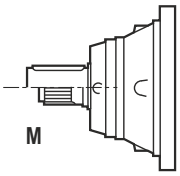

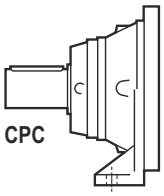

TEKNİK VERİLER / TECHNICAL DATA / TECHNISCHE DATEN / DATI TECNICI / DONNÉES TECHNIQUES / DATOS TÉCNICAS

	i_{ges}	M_2max (n1: 1400rpm) (Nm)
30002	14.2 ... 35.1	17730
30003	64.8 ... 134.4	24160
30004	251.4 ... 1425.1	33110

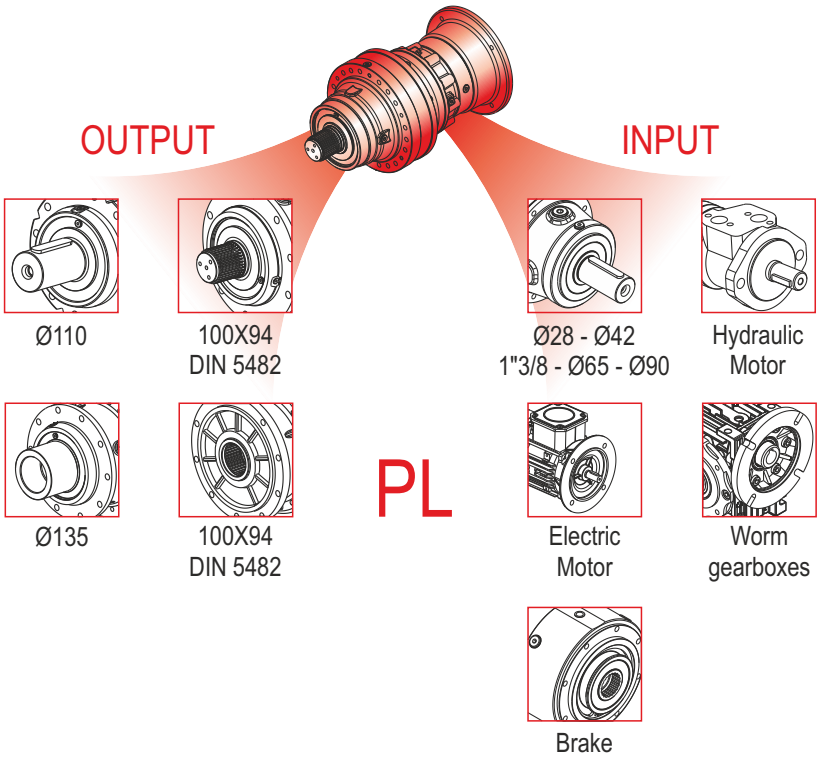

	i_{ges}	M_2max (n1: 1400rpm) (Nm)
30003	52.7 ... 163.8	23060
30004	306.0 ... 1385.5	31540

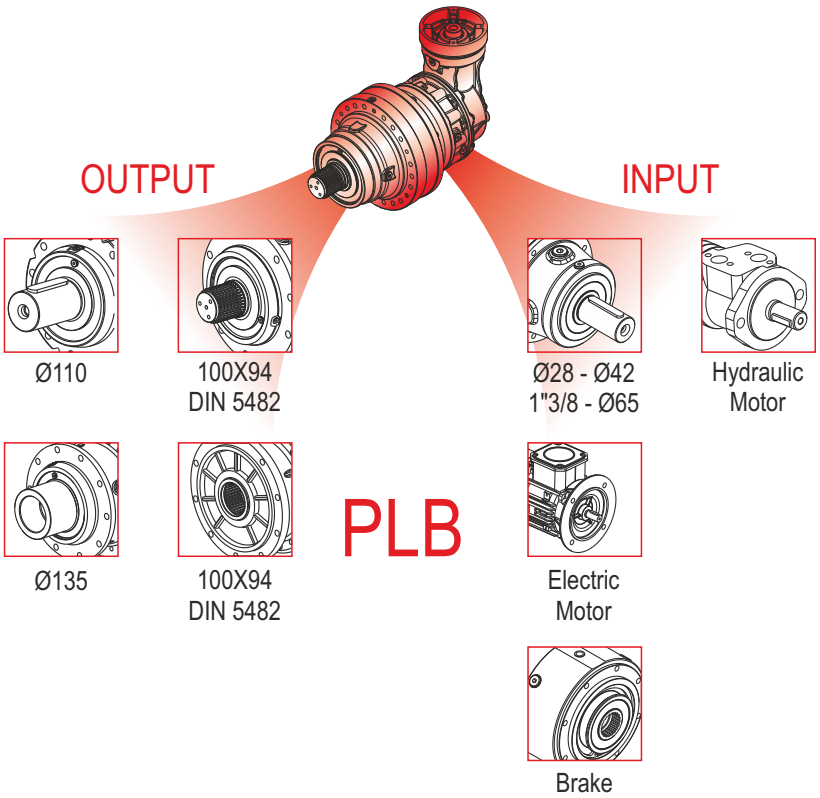

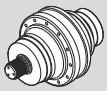	Pt [kW]	n_{1max} [min^{-1}]	i_{ges}	Mc [kNm] n_2 x h 10.000	Mc [kNm] n_2 x h 20.000	Mc [kNm] n_2 x h 50.000	Mc [kNm] n_2 x h 100.000	Giriş- Input - Antrieb - Entrata - Entrée - Entrada: IEC (B5)	PMRV / PRV	EL - EML EM - EP - ET
PL 30002	34	2000	14.2 17.1 22.4 29.1 35.1	35.45 35.45 35.45 27.41 27.41	31.38 31.38 31.38 24.26 24.26	26.70 26.70 26.70 20.64 20.64	23.63 23.63 23.63 18.27 18.27	160 180 200	110 130 150	EM 65 EM 1"3/8 Z6 EP 65 ET 90
PL 30003	23	2800	64.8 73.5 88.6 102.9 124.3 134.4	35.45 35.45 35.45 35.45 35.45 35.45	31.38 31.38 31.38 31.38 31.38 31.38	26.70 26.70 26.70 26.70 26.70 26.70	23.63 23.63 23.63 23.63 23.63 23.63	63 71 80 90 100 112 132 160 180	050 063 075 090 100 130 150	EL C 28 EL C 42 EML 42 EML 1"3/8 Z6 EM 65 EM 1"3/8 Z6 EP 65
PL 30004	17	2800	251.4 300.9 314.9 328.5 362.7 379.6 396.0 427.1 477.3 517.4 576.0 623.7 694.3 752.6 838.9 1015.5 1425.1	35.45 35.45 35.45 35.45 35.45 35.45 35.45 35.45 35.45 35.45 35.45 35.45 35.45 35.45 35.45 27.41 27.41	31.38 31.38 31.38 31.38 31.38 31.38 31.38 31.38 31.38 31.38 31.38 31.38 31.38 31.38 31.38 24.26 24.26	26.70 26.70 26.70 26.70 26.70 26.70 26.70 26.70 26.70 26.70 26.70 26.70 26.70 26.70 26.70 20.64 20.64	23.63 23.63 23.63 23.63 23.63 23.63 23.63 23.63 23.63 23.63 23.63 23.63 23.63 23.63 23.63 18.27 18.27	63 71 80 90 100 112 132 160	050 063 075 090	EL C 28 EL C 42 EML 42 EML 1"3/8 Z6

	Pt [kW]	n_{1max} [min^{-1}]	i_{ges}	Mc [kNm]				Giriş- Input - Antrieb - Entrata - Entrée - Entrada	
				n_2 x h	n_2 x h	n_2 x h	n_2 x h		
				10.000	20.000	50.000	100.000	IEC (B5)	EL - EML EM - EP - ET
PLB 30003	23	2800	52.7 66.4 80.0 104.5 135.9 163.8	35.45 35.45 35.45 35.45 27.41 27.41	31.38 31.38 31.38 31.38 24.26 24.26	26.70 26.70 26.70 26.70 20.64 20.64	23.63 23.63 23.63 23.63 18.27 18.27	160 180	EM 65 EM 1"3/8 Z6 EP 65
PLB 30004	17	2800	306.0 352.6 385.0 460.7 519.8 598.9 676.7 729.3 819.1 951.2 1385.5	35.45 35.45 35.45 35.45 27.41 27.41 35.45 27.41 27.41 27.41 27.41	31.38 31.38 31.38 31.38 24.26 24.26 31.38 24.26 24.26 24.26 24.26	26.70 26.70 26.70 26.70 20.64 20.64 26.70 20.64 20.64 20.64 20.64	23.63 23.63 23.63 23.63 18.27 18.27 23.63 18.27 18.27 18.27 18.27	80 90 100 112 132 160	EL C 28 EL C 42 EML 42 EML 1"3/8 Z6 EM 65 EM 1"3/8 Z6 EP 65

⚠

(n_2 x h = 20.000)

$$M_{max} = M_C \times 2$$

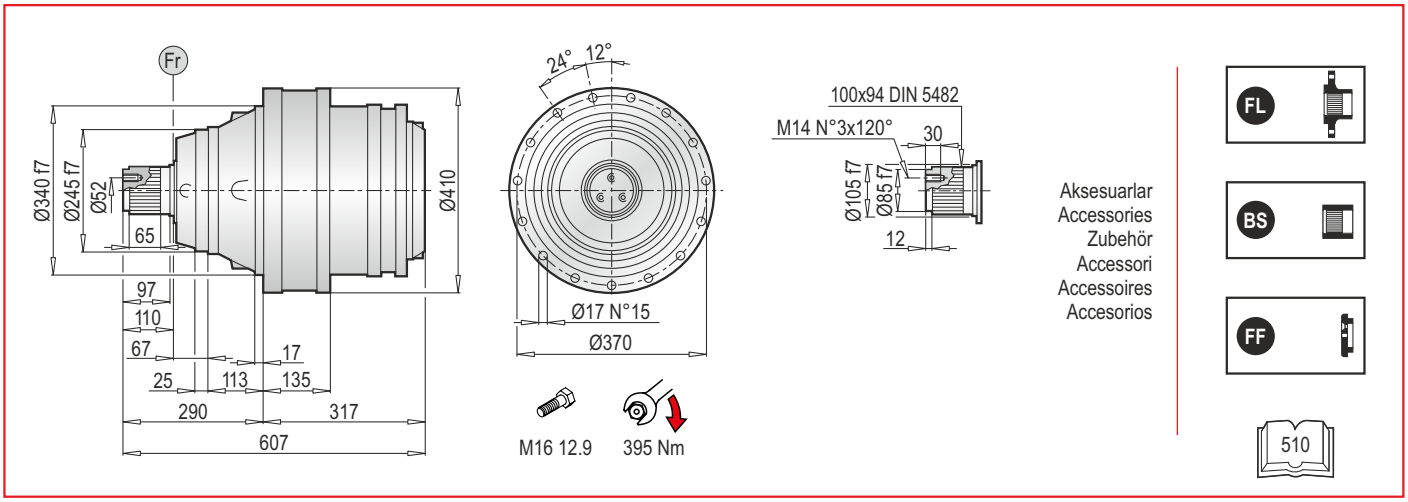

PL 30000 MS - Elektrik Motor Adaptörleri (IEC) / Electrıc Motor Couplings (IEC) / Anbauvorrichtung Für Elektromotore (IEC) / Predisposizioni Per Motori Elettrici (IEC) / Adaptations Pour Moteurs Electriques (IEC) / Acoplamientos Para Motores Eléctricos (IEC)

PL	IEC 63			IEC 71			IEC 80			IEC 90			IEC 100		
	LT	Z	ØD	LT	Z	ØD	LT	Z	ØD	LT	Z	ØD	LT	Z	ØD
30002	-			-			-			-			-		
30003	424.5	36	140	424.5	36	160	444.5	56	200	444.5	56	200	454.5	66	250
30004	485.5			485.5			505.5			505.5			515.5		

PL	IEC 112			IEC 132			IEC 160			IEC 180			IEC 200		
	LT	Z	ØD	LT	Z	ØD	LT	Z	ØD	LT	Z	ØD	LT	Z	ØD
30002	-			-			435	118	350	435	118	350	465	148	400
30003	454.5	66	250	488.5	100	300	527.5	139		527.5	139		-		
30004	515.5			549.5			588.5			-			-		

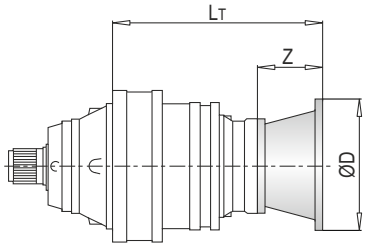

PL	IEC ~ Kg									
	63	71	80	90	100	112	132	160	180	200
30002	-	-	-	-	-	-	-	261	261	271
30003	260	260	262	262	263	263	267	277	277	-
30004	268	268	270	270	271	271	275	285	-	-

PL 30000 MS - Giriş Milleri / Input Shafts / Antriebswellen / Alberi Entrata / Arbres D'entree / Ejes De Entrada

PL	EL C 28				EL C 42				EML 42				EML 1"3/8 Z6				EM 65				EM 1"3/8 Z6			
	LT	Z	L	Ød	LT	Z	L	Ød	LT	Z	L	Ød	LT	Z	L	Ød	LT	Z	L	Ød	LT	Z	L	Ød
30002	-				-				-				-				438.5	121.5	105	65	438.5	121.5	105	1"3/8
30003	452.5	64	50	28	452.5	64	82	42	482.5	94	82	42	482.5	94	106	1"3/8	510				510			
30004	513.5				513.5				543.5				543.5				-				-			

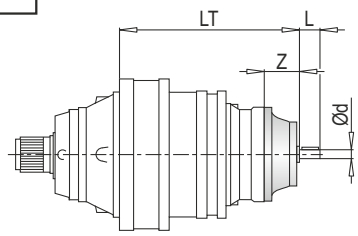

PL	EP 65				ET 90			
	LT	Z	L	Ød	LT	Z	L	Ød
30002	470	153	105	65	488.5	171.5	170	90
30003	541.5				-			
30004	-				-			

PL	~ Kg							
	EL C 28	EL C 42	EML 42	EML 1"3/8 Z6	EM 65	EM 1"3/8 Z6	EP 65	ET 90
30002	-	-	-	-	256.0	256.0	265.0	287.0
30003	260.5	261.0	264.0	264.0	272.0	272.0	281.0	-
30004	268.5	269.0	272.0	272.0	-	-	-	-

PL 30000 MS - Sonsuz Dişlili Redüktör Adaptörleri (PMRV/PRV) / Worm Gearbox Adaptors (PMRV/PRV) / Anschluss Für Schneckengetriebe (PMRV/PRV) / Predisposizioni Per Riduttori A Vite Senza Fine (PMRV/PRV) / Adaptation Pour Reducteurs A Vis Sans Fin (PMRV/PRV) / Acoplamiento Para Reductores De Tornillo Sin Fin (PMRV/PRV)

PL	PMRV/PRV 050					PMRV/PRV 063					PMRV/PRV 075				
	LM	l	h	MA	G	LM	l	h	MA	G	LM	l	h	MA	G
30002	-					-					-				
30003	510	50	110	60	80	519.5	63	135	72	95	498.5	75	161	86	112.5
30004	571					580.5					559.5				

PL	PMRV/PRV 090					PMRV/PRV 110					PMRV/PRV 130				
	LM	l	h	MA	G	LM	l	h	MA	G	LM	l	h	MA	G
30002	-					451	110	237.5	127.5	160	456.5	130	277.5	147.5	180
30003	508.5	90	193	103	129.5	522.5					528				
30004	569.5					-					-				

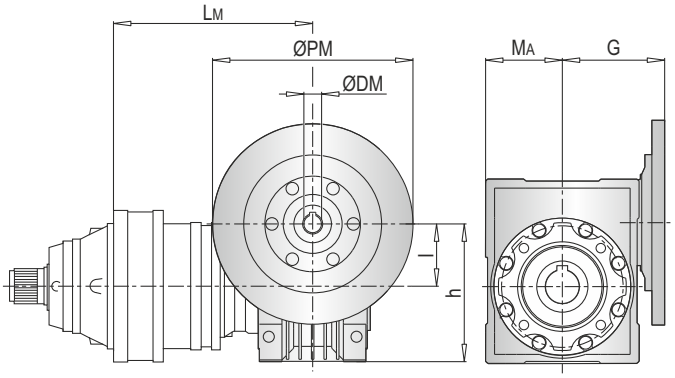

PL	PMRV/PRV 150				
	LM	l	h	MA	G
30002	473	150	320	170	210
30003	544.5				
30004	-				

PL	PMRV/PRV ~ Kg						
	050	063	075	090	110	130	150
30002	-	-	-	-	285	302	338
30003	263	266.5	269	274	301	318	354
30004	271	274.5	277	281	-	-	-

ØPM
ØDM
105

PLB 30000 MS - Elektrik Motor Adaptörleri (IEC) / Electric Motor Couplings (IEC) / Anbauvorrichtung Für Elektromotore (IEC) / Predisposizioni Per Motori Elettrici (IEC) / Adaptations Pour Moteurs Electriques (IEC) / Acoplamientos Para Motores Eléctricos (IEC)

PLB	IEC 80				IEC 90				IEC 100				IEC 112			
	A	LT	Z	ØD	A	LT	Z	ØD	A	LT	Z	ØD	A	LT	Z	ØD
30003	-				-				-				-			
30004	490	296	56	200	490	296	56	200	490	306	66	250	490	306	66	250

PLB	IEC 132				IEC 160				IEC 180			
	A	LT	Z	ØD	A	LT	Z	ØD	A	LT	Z	ØD
30003	-				452	358	118	350	452	358	118	350
30004	490	340	100	300	490	379	139		-			

PLB	IEC ~ Kg						
	80	90	100	112	132	160	180
30003	-	-	-	-	-	362	362
30004	302	302	303	303	307	317	-

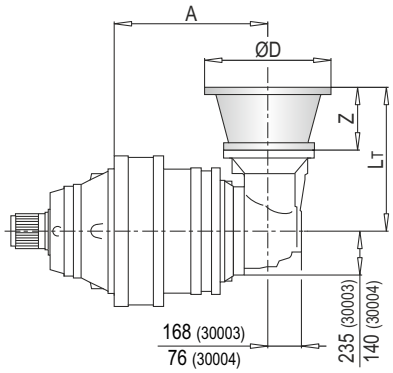

103

PLB 30000 MS - Giriş Milleri / Input Shafts / Antriebswellen / Alberi Entrata / Arbres D'entree / Ejes De Entrada

PLB	EL C 28					EL C 42					EML 42					EML 1"3/8 Z6					EM 65				
	A	LT	Z	L	Ød	A	LT	Z	L	Ød	A	LT	Z	L	Ød	A	LT	Z	L	Ød	A	LT	Z	L	Ød
30003	-					-					-					-					452	361.5	121.5	105	65
30004	490	304	64	50	28	490	304	64	82	42	490	334	94	82	42	490	334	94	106	1"3/8	490				

PLB	EM 1"3/8 Z6					EP 65				
	A	LT	Z	L	Ød	A	LT	Z	L	Ød
30003	452	361.5	121.5	105	1"3/8	452	393	153	105	65
30004	490					490				

PLB	~ Kg						
	EL C 28	EL C 42	EML 42	EML 1"3/8 Z6	EM 65	EM 1"3/8 Z6	EP 65
30003	-	-	-	-	357.0	357.0	366.0
30004	305.5	306.0	309.0	309.0	312.0	312.0	321.0

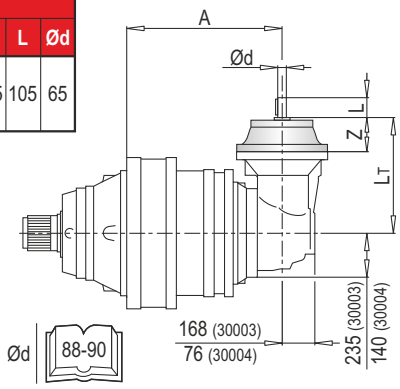

Ød 88-90

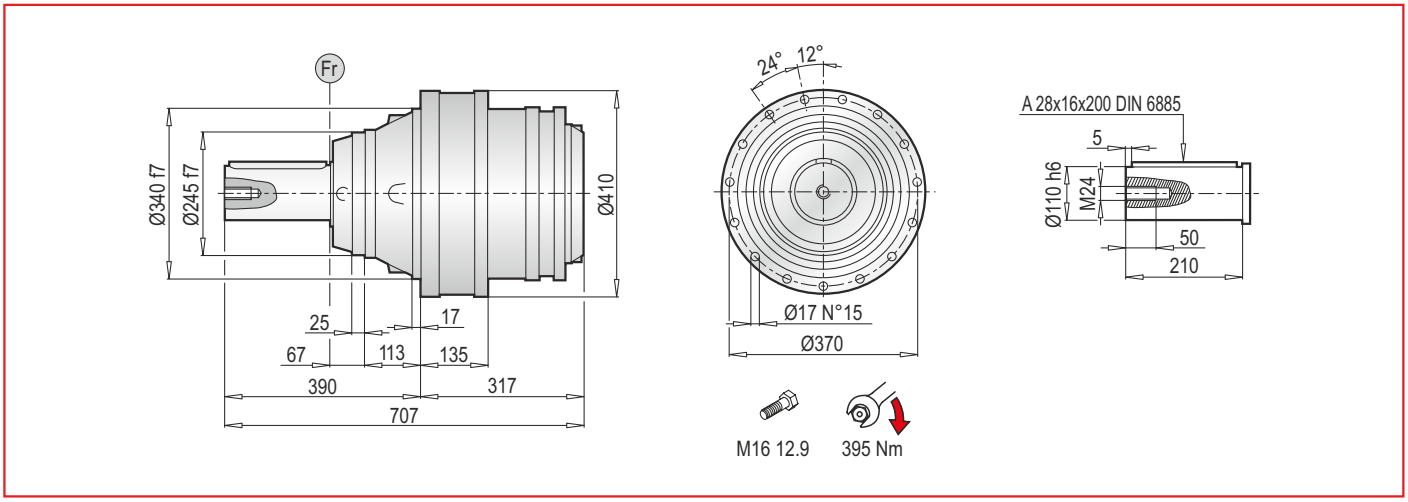

PL 30000 MC - Elektrik Motor Adaptörleri (IEC) / Electrıc Motor Couplings (IEC) / Anbauvorrichtung Für Elektromotore (IEC) / Predisposizioni Per Motori Elettrici (IEC) / Adaptations Pour Moteurs Electriques (IEC) / Acoplamientos Para Motores Eléctricos (IEC)

PL	IEC 63			IEC 71			IEC 80			IEC 90			IEC 100		
	LT	Z	ØD	LT	Z	ØD	LT	Z	ØD	LT	Z	ØD	LT	Z	ØD
30002	-			-			-			-			-		
30003	424.5	36	140	424.5	36	160	444.5	56	200	444.5	56	200	454.5	66	250
30004	485.5			485.5			505.5			505.5			515.5		

PL	IEC 112			IEC 132			IEC 160			IEC 180			IEC 200		
	LT	Z	ØD	LT	Z	ØD	LT	Z	ØD	LT	Z	ØD	LT	Z	ØD
30002	-			-			435	118	350	435	118	350	465	148	400
30003	454.5	66	250	488.5	100	300	527.5	139		527.5	139		-		
30004	515.5			549.5			588.5			-			-		

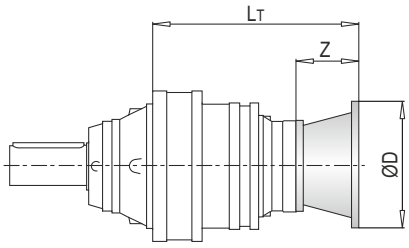

PL	IEC ~ Kg									
	63	71	80	90	100	112	132	160	180	200
30002	-	-	-	-	-	-	-	261	261	271
30003	260	260	262	262	263	263	267	277	277	-
30004	268	268	270	270	271	271	275	285	-	-

PL 30000 MC - Giriş Milleri / Input Shafts / Antriebswellen / Alberi Entrata / Arbres D'entree / Ejes De Entrada

PL	EL C 28				EL C 42				EML 42				EML 1"3/8 Z6				EM 65				EM 1"3/8 Z6			
	LT	Z	L	Ød	LT	Z	L	Ød	LT	Z	L	Ød	LT	Z	L	Ød	LT	Z	L	Ød	LT	Z	L	Ød
30002	-				-				-				-				438.5	121.5	105	65	438.5	121.5	105	1"3/8
30003	452.5	64	50	28	452.5	64	82	42	482.5	94	82	42	482.5	94	106	1"3/8	510				510			
30004	513.5				513.5				543.5				543.5				-				-			

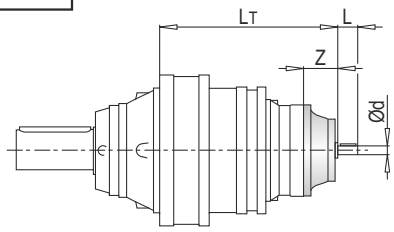

PL	EP 65				ET 90			
	LT	Z	L	Ød	LT	Z	L	Ød
30002	470	153	105	65	488.5	171.5	170	90
30003	541.5				-			
30004	-				-			

PL	~ Kg							
	EL C 28	EL C 42	EML 42	EML 1"3/8 Z6	EM 65	EM 1"3/8 Z6	EP 65	ET 90
30002	-	-	-	-	256.0	256.0	265.0	287.0
30003	260.5	261.0	264.0	264.0	272.0	272.0	281.0	-
30004	268.5	269.0	272.0	272.0	-	-	-	-

PL 30000 MC - Sonsuz Dişlili Redüktör Adaptörleri (PMRV/PRV) / Worm Gearbox Adaptors (PMRV/PRV) / Anschluss Für Schneckengetriebe (PMRV/PRV) / Predisposizioni Per Riduttori A Vite Senza Fine (PMRV/PRV) / Adaptation Pour Reducteurs A Vis Sans Fin (PMRV/PRV) / Acoplamiento Para Reductores De Tornillo Sin Fin (PMRV/PRV)

PL	PMRV/PRV 050					PMRV/PRV 063					PMRV/PRV 075				
	LM	l	h	MA	G	LM	l	h	MA	G	LM	l	h	MA	G
30002	-					-					-				
30003	510	50	110	60	80	519	63	135	72	95	498.5	75	161	86	112.5
30004	571					580.5					559.5				

PL	PMRV/PRV 090					PMRV/PRV 110					PMRV/PRV 130				
	LM	l	h	MA	G	LM	l	h	MA	G	LM	l	h	MA	G
30002	-					451	110	237.5	127.5	160	456.5	130	277.5	147.5	180
30003	508.5	90	193	103	129.5	522.5					528				
30004	569.5					-					-				

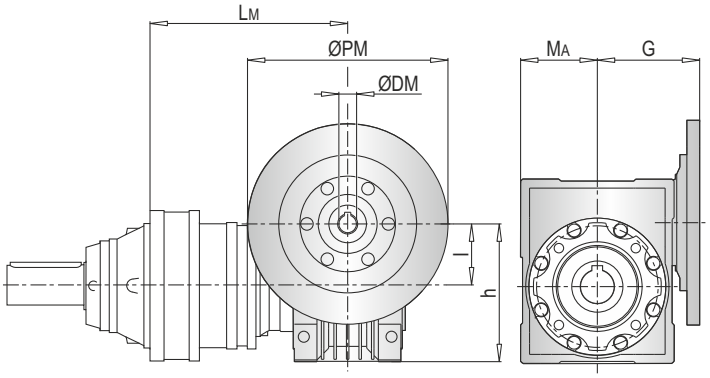

PL	PMRV/PRV 150				
	LM	l	h	MA	G
30002	473	150	320	170	210
30003	544.5				
30004	-				

PL	PMRV/PRV ~ Kg						
	050	063	075	090	110	130	150
30002	-	-	-	-	285	302	338
30003	263	266.5	269	274	301	318	354
30004	271	274.5	277	281	-	-	-

ØPM
ØDM
105

PLB 30000 MC - Elektrik Motor Adaptörleri (IEC) / Electric Motor Couplings (IEC) / Anbauvorrichtung Für Elektromotore (IEC) / Predisposizioni Per Motori Elettrici (IEC) / Adaptations Pour Moteurs Electriques (IEC) / Acoplamientos Para Motores Eléctricos (IEC)

PLB	IEC 80				IEC 90				IEC 100				IEC 112			
	A	LT	Z	ØD	A	LT	Z	ØD	A	LT	Z	ØD	A	LT	Z	ØD
30003	-				-				-				-			
30004	490	296	56	200	490	296	56	200	490	306	66	250	490	306	66	250

PLB	IEC 132				IEC 160				IEC 180			
	A	LT	Z	ØD	A	LT	Z	ØD	A	LT	Z	ØD
30003	-				452	358	118	350	452	358	118	350
30004	490	340	100	300	490	379	139		-			

PLB	IEC ~ Kg						
	80	90	100	112	132	160	180
30003	-	-	-	-	-	362	362
30004	302	302	303	303	307	317	-

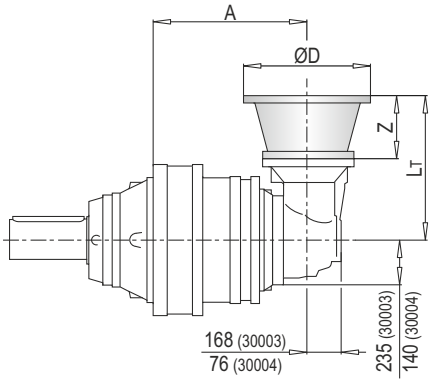

103

PLB 30000 MC - Giriş Milleri / Input Shafts / Antriebswellen / Alberi Entrata / Arbres D'entree / Ejes De Entrada

PLB	EL C 28					EL C 42					EML 42					EML 1"3/8 Z6					EM 65				
	A	LT	Z	L	Ød	A	LT	Z	L	Ød	A	LT	Z	L	Ød	A	LT	Z	L	Ød	A	LT	Z	L	Ød
30003	-					-					-					-					452	361.5	121.5	105	65
30004	490	304	64	50	28	490	304	64	82	42	490	334	94	82	42	490	334	94	106	1"3/8	490				

PLB	EM 1"3/8 Z6					EP 65				
	A	LT	Z	L	Ød	A	LT	Z	L	Ød
30003	452	361.5	121.5	105	1"3/8	452	393	153	105	65
30004	490					490				

PLB	~ Kg						
	EL C 28	EL C 42	EML 42	EML 1"3/8 Z6	EM 65	EM 1"3/8 Z6	EP 65
30003	-	-	-	-	357.0	357.0	366.0
30004	305.5	306.0	309.0	309.0	312.0	312.0	321.0

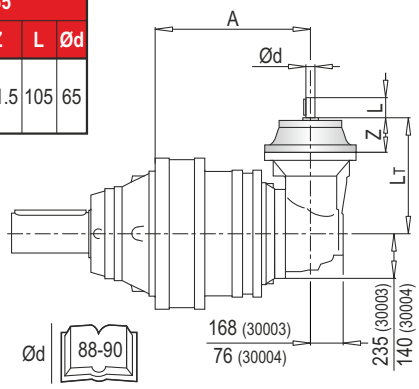

Ød 88-90

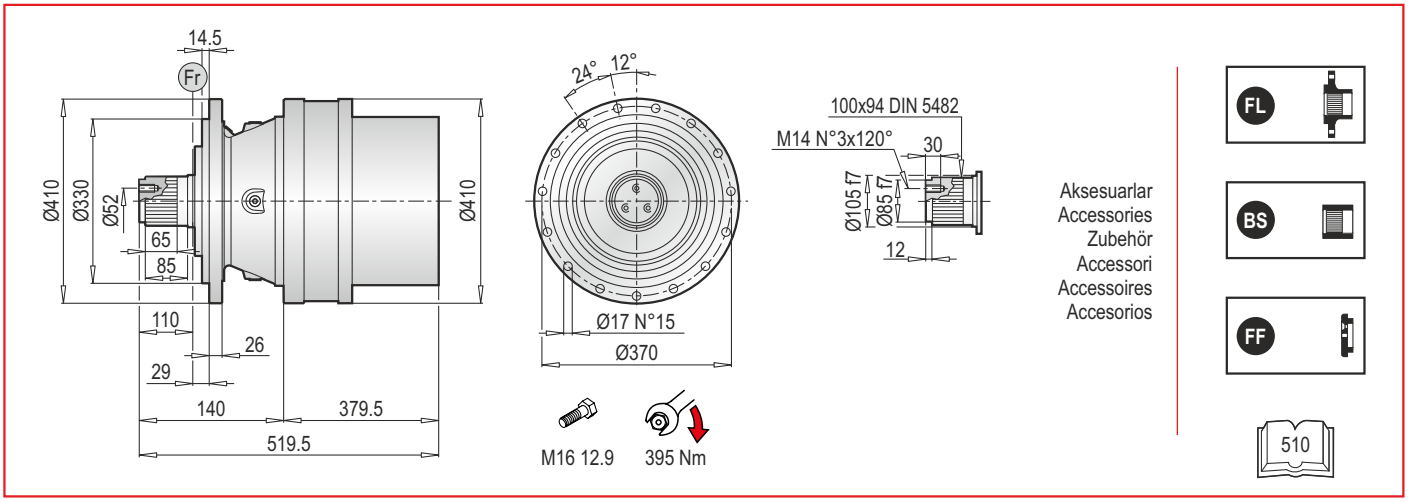

PL 30000 MSF - Elektrik Motor Adaptörleri (IEC) / Electrıc Motor Couplings (IEC) / Anbauvorrichtung Für Elektromotore (IEC) / Predisposizioni Per Motori Elettrici (IEC) / Adaptations Pour Moteurs Electriques (IEC) / Acoplamientos Para Motores Eléctricos (IEC)

PL	IEC 63			IEC 71			IEC 80			IEC 90			IEC 100		
	LT	Z	ØD	LT	Z	ØD	LT	Z	ØD	LT	Z	ØD	LT	Z	ØD
30002	-			-			-			-			-		
30003	574	36	140	574	36	160	594	56	200	594	56	200	604	66	250
30004	635			635			655			655			665		

PL	IEC 112			IEC 132			IEC 160			IEC 180			IEC 200		
	LT	Z	ØD	LT	Z	ØD	LT	Z	ØD	LT	Z	ØD	LT	Z	ØD
30002	-			-			584.5	118	350	584.5	118	350	614.5	148	400
30003	604	66	250	638	100	300	677	139		677	139		-		
30004	665			699			738			-			-		

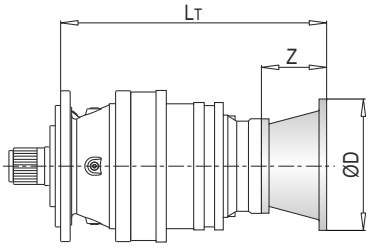

PL	IEC ~ Kg									
	63	71	80	90	100	112	132	160	180	200
30002	-	-	-	-	-	-	-	287	287	297
30003	286	286	288	288	289	289	293	303	303	-
30004	294	294	296	296	297	297	301	311	-	-

PL 30000 MSF - Giriş Milleri / Input Shafts / Antriebswellen / Alberi Entrata / Arbres D'entree / Ejes De Entrada

PL	EL C 28				EL C 42				EML 42				EML 1"3/8 Z6				EM 65				EM 1"3/8 Z6			
	LT	Z	L	Ød	LT	Z	L	Ød	LT	Z	L	Ød	LT	Z	L	Ød	LT	Z	L	Ød	LT	Z	L	Ød
30002	-				-				-				-				588	121.5	105	65	588	121.5	105	1"3/8
30003	602	64	50	28	602	64	82	42	632	94	82	42	632	94	106	1"3/8	673				673			
30004	663				663				693				693				-				-			

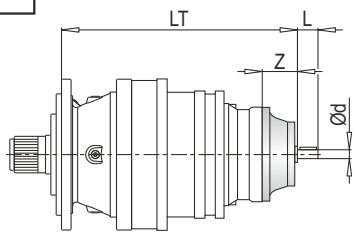

PL	EP 65				ET 90			
	LT	Z	L	Ød	LT	Z	L	Ød
30002	619.5	153	105	65	671.5	174	170	90
30003	704.5				-			
30004	-				-			

PL	~ Kg							
	EL C 28	EL C 42	EML 42	EML 1"3/8 Z6	EM 65	EM 1"3/8 Z6	EP 65	ET 90
30002	-	-	-	-	282	282	291	313
30003	286.5	287	290	290	298	298	307	-
30004	294.5	295	298	293	-	-	-	-

PL 30000 MSF - Sonsuz Dişlili Redüktör Adaptörleri (PMRV/PRV) / Worm Gearbox Adaptors (PMRV/PRV) / Anschluss Für Schneckengetriebe (PMRV/PRV) / Predisposizioni Per Riduttori A Vite Senza Fine (PMRV/PRV) / Adaptation Pour Reducteurs A Vis Sans Fin (PMRV/PRV) / Acoplamiento Para Reductores De Tornillo Sin Fin (PMRV/PRV)

PL	PMRV/PRV 050					PMRV/PRV 063					PMRV/PRV 075				
	LM	l	h	MA	G	LM	l	h	MA	G	LM	l	h	MA	G
30002	-					-					-				
30003	663.5	50	110	60	80	673	63	135	72	95	652	75	161	86	112.5
30004	724.5					734					713				

PL	PMRV/PRV 090					PMRV/PRV 110					PMRV/PRV 130				
	LM	l	h	MA	G	LM	l	h	MA	G	LM	l	h	MA	G
30002	-					604.5	110	237.5	127.5	160	612	130	277.5	147.5	180
30003	662	90	193	103	129.5	689.5					697				
30004	723					-					-				

PL	PMRV/PRV 150				
	LM	l	h	MA	G
30002	626.5	150	320	170	210
30003	711.5				
30004	-				

PL	PMRV/PRV ~ Kg						
	050	063	075	090	110	130	150
30002	-	-	-	-	311	328	364
30003	289	292.5	295	300	327	344	380
30004	297	300.5	303	307	-	-	-

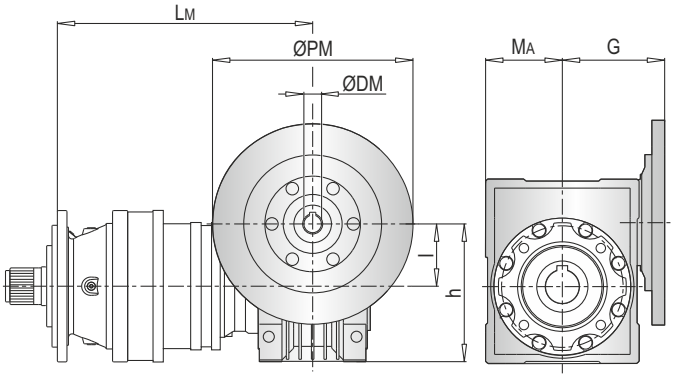

ØPM
ØDM
105

PLB 30000 MSF - Elektrik Motor Adaptörleri (IEC) / Electric Motor Couplings (IEC) / Anbauvorrichtung Für Elektromotore (IEC) / Predisposizioni Per Motori Elettrici (IEC) / Adaptations Pour Moteurs Electriques (IEC) / Acoplamientos Para Motores Eléctricos (IEC)

PLB	IEC 80				IEC 90				IEC 100				IEC 112			
	A	LT	Z	ØD	A	LT	Z	ØD	A	LT	Z	ØD	A	LT	Z	ØD
30003	-				-				-				-			
30004	639.5	296	56	200	639.5	296	56	200	639.5	306	66	250	639.5	306	66	250

PLB	IEC 132				IEC 160				IEC 180			
	A	LT	Z	ØD	A	LT	Z	ØD	A	LT	Z	ØD
30003	-				601.5	433	118	350	601.5	433	118	350
30004	639.5	340	100	300	639.5	379	139		-			

PLB	IEC ~ Kg						
	80	90	100	112	132	160	180
30003	-	-	-	-	-	362	362
30004	302	302	303	303	307	317	-

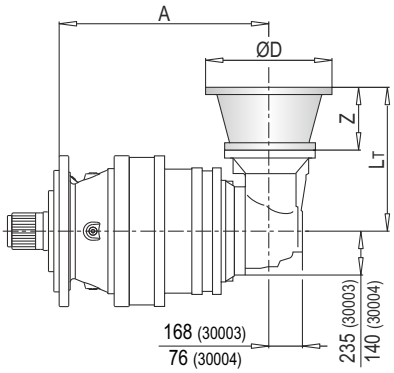

103

PLB 30000 MSF - Giriş Milleri / Input Shafts / Antriebswellen / Alberi Entrata / Arbres D'entree / Ejes De Entrada

PLB	EL C 28					EL C 42					EML 42					EML 1"3/8 Z6					EM 65				
	A	LT	Z	L	Ød	A	LT	Z	L	Ød	A	LT	Z	L	Ød	A	LT	Z	L	Ød	A	LT	Z	L	Ød
30003	-					-					-					-					601.5	436.5	121.5	105	65
30004	639.5	304	64	50	28	639.5	304	64	82	42	639.5	334	94	82	42	639.5	334	94	106	1"3/8	639.5	377.5			

PLB	EM 1"3/8 Z6					EP 65				
	A	LT	Z	L	Ød	A	LT	Z	L	Ød
30003	601.5	436.5	121.5	105	1"3/8	601.5	468	153	105	65
30004	639.5	377.5				639.5	409			

PLB	~ Kg						
	EL C 28	EL C 42	EML 42	EML 1"3/8 Z6	EM 65	EM 1"3/8 Z6	EP 65
30003	-	-	-	-	383	383	392
30004	331.5	332	335	335	338	338	347

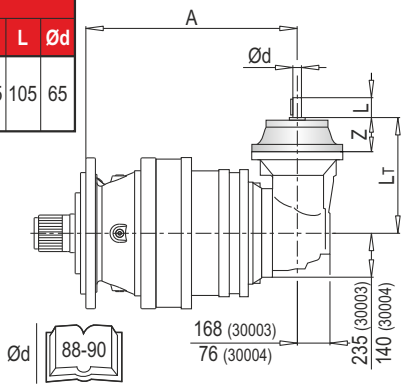

Ød 88-90

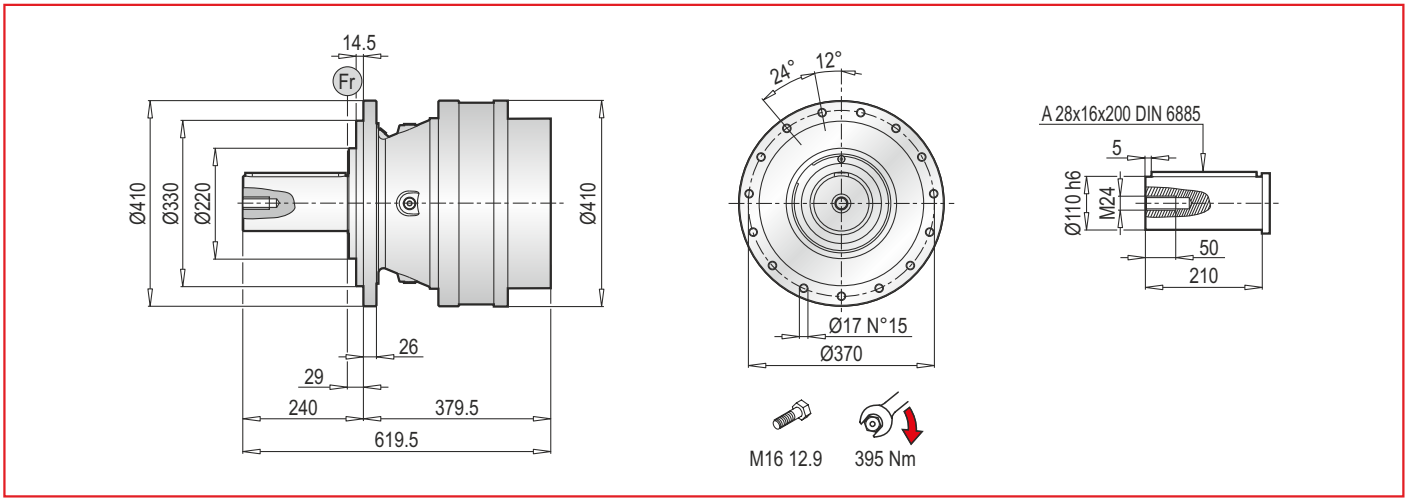

PL 30000 MCF - Elektrik Motor Adaptörleri (IEC) / Electrıc Motor Couplings (IEC) / Anbauvorrichtung Für Elektromotore (IEC) / Predisposizioni Per Motori Elettrici (IEC) / Adaptations Pour Moteurs Electriques (IEC) / Acoplamientos Para Motores Eléctricos (IEC)

PL	IEC 63			IEC 71			IEC 80			IEC 90			IEC 100		
	LT	Z	ØD	LT	Z	ØD	LT	Z	ØD	LT	Z	ØD	LT	Z	ØD
30002	-			-			-			-			-		
30003	574	36	140	574	36	160	594	56	200	594	56	200	604	66	250
30004	635			635			655			655			665		

PL	IEC 112			IEC 132			IEC 160			IEC 180			IEC 200		
	LT	Z	ØD	LT	Z	ØD	LT	Z	ØD	LT	Z	ØD	LT	Z	ØD
30002	-			-			584.5	118	350	584.5	118	350	614.5	148	400
30003	604	66	250	638	100	300	677	139		677	139		-		
30004	665			699			738			-			-		

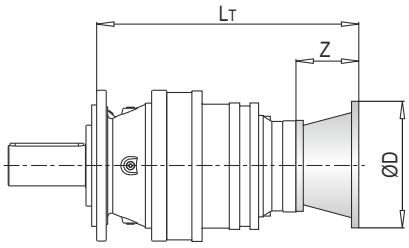

PL	IEC ~ Kg									
	63	71	80	90	100	112	132	160	180	200
30002	-	-	-	-	-	-	-	287	287	297
30003	286	286	288	288	289	289	293	303	303	-
30004	294	294	296	296	297	297	301	311	-	-

PL 30000 MCF - Giriş Milleri / Input Shafts / Antriebswellen / Alberi Entrata / Arbres D'entree / Ejes De Entrada

PL	EL C 28				EL C 42				EML 42				EML 1"3/8 Z6				EM 65				EM 1"3/8 Z6			
	LT	Z	L	Ød	LT	Z	L	Ød	LT	Z	L	Ød	LT	Z	L	Ød	LT	Z	L	Ød	LT	Z	L	Ød
30002	-				-				-				-				588	121.5	105	65	588	121.5	105	1"3/8
30003	602	64	50	28	602	64	82	42	632	94	82	42	632	94	106	1"3/8	673				673			
30004	663				663				693				693				-				-			

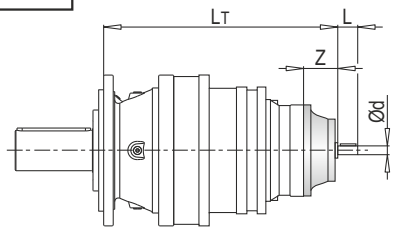

PL	EP 65				ET 90			
	LT	Z	L	Ød	LT	Z	L	Ød
30002	619.5	153	105	65	671.5	174	170	90
30003	704.5				-			
30004	-				-			

PL	~ Kg							
	EL C 28	EL C 42	EML 42	EML 1"3/8 Z6	EM 65	EM 1"3/8 Z6	EP 65	ET 90
30002	-	-	-	-	282	282	291	313
30003	286.5	287	290	290	298	298	307	-
30004	294.5	295	298	293	-	-	-	-

PL 30000 MCF - Sonsuz Dişlili Redüktör Adaptörleri (PMRV/PRV) / Worm Gearbox Adaptors (PMRV/PRV) / Anschluss Für Schneckengetriebe (PMRV/PRV) / Predisposizioni Per Riduttori A Vite Senza Fine (PMRV/PRV) / Adaptation Pour Reducteurs A Vis Sans Fin (PMRV/PRV) / Acoplamiento Para Reductores De Tornillo Sin Fin (PMRV/PRV)

PL	PMRV/PRV 050					PMRV/PRV 063					PMRV/PRV 075				
	LM	l	h	MA	G	LM	l	h	MA	G	LM	l	h	MA	G
30002	-					-					-				
30003	663.5	50	110	60	80	673	63	135	72	95	652	75	161	86	112.5
30004	724.5					734					713				

PL	PMRV/PRV 090					PMRV/PRV 110					PMRV/PRV 130				
	LM	l	h	MA	G	LM	l	h	MA	G	LM	l	h	MA	G
30002	-					604.5	110	237.5	127.5	160	612	130	277.5	147.5	180
30003	662	90	193	103	129.5	689.5					697				
30004	723					-					-				

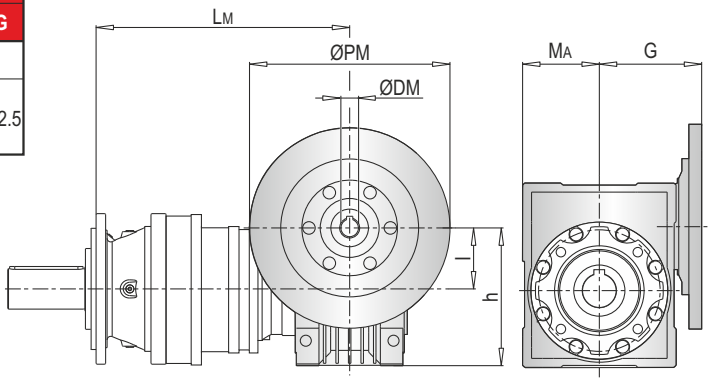

PL	PMRV/PRV 150				
	LM	l	h	MA	G
30002	626.5	150	320	170	210
30003	711.5				
30004	-				

PL	PMRV/PRV ~ Kg						
	050	063	075	090	110	130	150
30002	-	-	-	-	311	328	364
30003	289	292.5	295	300	327	344	380
30004	297	300.5	303	307	-	-	-

ØPM
ØDM
105

PLB 30000 MCF - Elektrik Motor Adaptörleri (IEC) / Electric Motor Couplings (IEC) / Anbauvorrichtung Für Elektromotore (IEC) / Predisposizioni Per Motori Elettrici (IEC) / Adaptations Pour Moteurs Electriques (IEC) / Acoplamientos Para Motores Eléctricos (IEC)

PLB	IEC 80				IEC 90				IEC 100				IEC 112			
	A	LT	Z	ØD	A	LT	Z	ØD	A	LT	Z	ØD	A	LT	Z	ØD
30003	-				-				-				-			
30004	639.5	296	56	200	639.5	296	56	200	639.5	306	66	250	639.5	306	66	250

PLB	IEC 132				IEC 160				IEC 180			
	A	LT	Z	ØD	A	LT	Z	ØD	A	LT	Z	ØD
30003	-				601.5	433	118	350	601.5	433	118	350
30004	639.5	340	100	300	639.5	379	139		-			

PLB	IEC ~ Kg						
	80	90	100	112	132	160	180
30003	-	-	-	-	-	362	362
30004	302	302	303	303	307	317	-

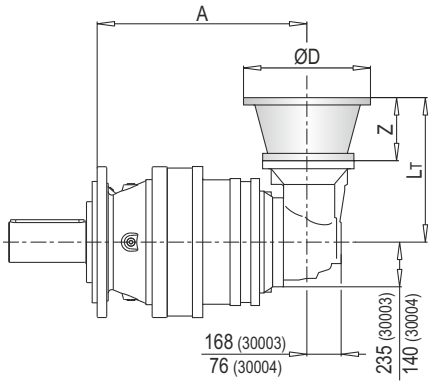

103

PLB 30000 MCF - Giriş Milleri / Input Shafts / Antriebswellen / Alberi Entrata / Arbres D'entree / Ejes De Entrada

PLB	EL C 28					EL C 42					EML 42					EML 1"3/8 Z6					EM 65				
	A	LT	Z	L	Ød	A	LT	Z	L	Ød	A	LT	Z	L	Ød	A	LT	Z	L	Ød	A	LT	Z	L	Ød
30003	-					-					-					-					601.5	436.5	121.5	105	65
30004	639.5	304	64	50	28	639.5	304	64	82	42	639.5	334	94	82	42	639.5	334	94	106	1"3/8	639.5	377.5			

PLB	EM 1"3/8 Z6					EP 65				
	A	LT	Z	L	Ød	A	LT	Z	L	Ød
30003	601.5	436.5	121.5	105	1"3/8	601.5	468	153	105	65
30004	639.5	377.5				639.5	409			

PLB	~ Kg						
	EL C 28	EL C 42	EML 42	EML 1"3/8 Z6	EM 65	EM 1"3/8 Z6	EP 65
30003	-	-	-	-	383	383	392
30004	331.5	332	335	335	338	338	347

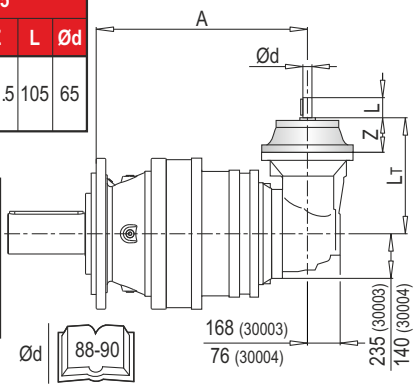

Ød 88-90

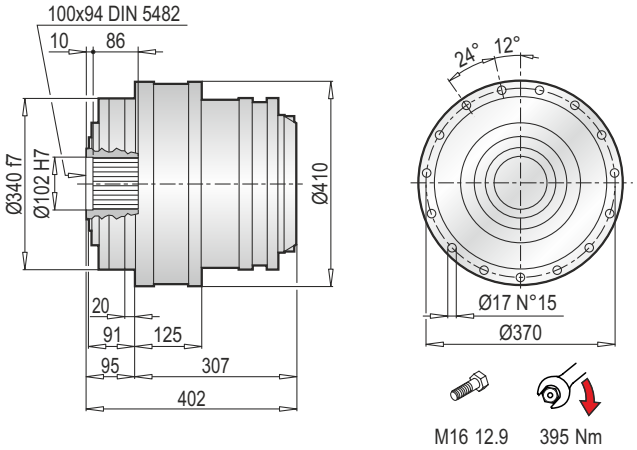

Aksesuarlar
Accessories
Zubehör
Accessori
Accessoires
Accesorios

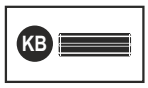

PL 30000 F - Elektrik Motor Adaptörleri (IEC) / Electrıc Motor Couplings (IEC) / Anbauvorrichtung Für Elektromotore (IEC) / Predisposizioni Per Motori Elettrici (IEC) / Adaptations Pour Moteurs Electriques (IEC) / Acoplamientos Para Motores Eléctricos (IEC)

PL	IEC 63			IEC 71			IEC 80			IEC 90			IEC 100		
	LT	Z	ØD	LT	Z	ØD	LT	Z	ØD	LT	Z	ØD	LT	Z	ØD
30002	-			-			-			-			-		
30003	414.5	36	140	414.5	36	160	434.5	56	200	434.5	56	200	444.5	66	250
30004	475.5			475.5			495.5			495.5			505.5		

PL	IEC 112			IEC 132			IEC 160			IEC 180			IEC 200		
	LT	Z	ØD	LT	Z	ØD	LT	Z	ØD	LT	Z	ØD	LT	Z	ØD
30002	-			-			425	118	350	425	118	350	455	148	400
30003	444.5	66	250	478.5	100	300	517.5	139		517.5	139		-		
30004	505.5			539.5			578.5			-			-		

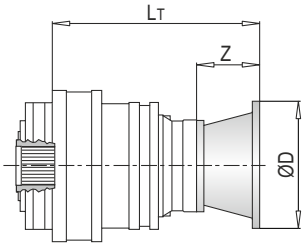

PL	IEC ~ Kg									
	63	71	80	90	100	112	132	160	180	200
30002	-	-	-	-	-	-	-	220	220	230
30003	219	219	221	221	222	222	226	236	236	-
30004	227	227	229	229	230	230	234	244	-	-

PL 30000 F - Giriş Milleri / Input Shafts / Antriebswellen / Alberi Entrata / Arbres D'entree / Ejes De Entrada

PL	EL C 28				EL C 42				EML 42				EML 1"3/8 Z6				EM 65				EM 1"3/8 Z6			
	LT	Z	L	Ød	LT	Z	L	Ød	LT	Z	L	Ød	LT	Z	L	Ød	LT	Z	L	Ød	LT	Z	L	Ød
30002	-				-				-				-				428.5	121.5	105	65	428.5	121.5	105	1"3/8
30003	442.5	64	50	28	442.5	64	82	42	472.5	94	82	42	472.5	94	106	1"3/8	500				500			
30004	503.5				503.5				533.5				533.5				-				-			

PL	EP 65				ET 90			
	LT	Z	L	Ød	LT	Z	L	Ød
30002	460	153	105	65	478.5	171.5	170	90
30003	531.5				-			
30004	-				-			

PL	~ Kg							
	EL C 28	EL C 42	EML 42	EML 1"3/8 Z6	EM 65	EM 1"3/8 Z6	EP 65	ET 90
30002	-	-	-	-	215.0	215.0	224.0	246.0
30003	219.5	220.0	223.0	223.0	231.0	231.0	240.0	-
30004	227.5	228.0	231.0	231.0	-	-	-	-

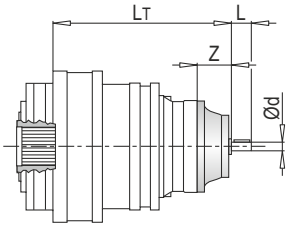

PL 30000 F - Sonsuz Dişlili Redüktör Adaptörleri (PMRV/PRV) / Worm Gearbox Adaptors (PMRV/PRV) / Anschluss Für Schneckengetriebe (PMRV/PRV) / Predisposizioni Per Riduttori A Vite Senza Fine (PMRV/PRV) / Adaptation Pour Reducteurs A Vis Sans Fin (PMRV/PRV) / Acoplamiento Para Reductores De Tornillo Sin Fin (PMRV/PRV)

PL	PMRV/PRV 050					PMRV/PRV 063					PMRV/PRV 075				
	LM	l	h	MA	G	LM	l	h	MA	G	LM	l	h	MA	G
30002	-					-					-				
30003	500	50	110	60	80	509	63	135	72	95	488.5	75	161	86	112.5
30004	561					570.5					549.5				

PL	PMRV/PRV 090					PMRV/PRV 110					PMRV/PRV 130				
	LM	l	h	MA	G	LM	l	h	MA	G	LM	l	h	MA	G
30002	-					441	110	237.5	127.5	160	446.5	130	277.5	147.5	180
30003	498.5	90	193	103	129.5	512.5					518				
30004	559.5					-					-				

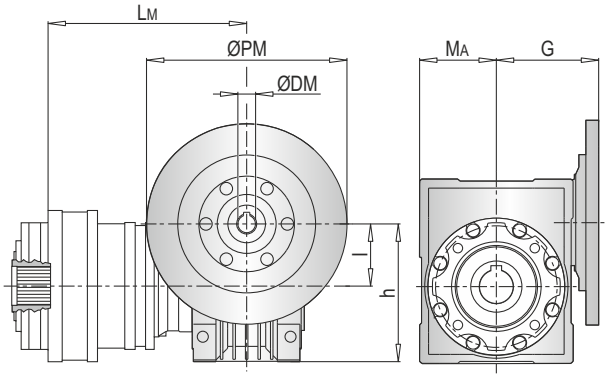

PL	PMRV/PRV 150				
	LM	l	h	MA	G
30002	463	150	320	170	210
30003	534.5				
30004	-				

PL	PMRV/PRV ~ Kg						
	050	063	075	090	110	130	150
30002	-	-	-	-	244	261	297
30003	222	225.5	228	233	260	277	313
30004	230	233.5	236	241	-	-	-

ØPM
ØDM
105

PLB 30000 F - Elektrik Motor Adaptörleri (IEC) / Electric Motor Couplings (IEC) /Anbauvorrichtung Für Elektromotore (IEC) / Predisposizioni Per Motori Elettrici (IEC) / Adaptations Pour Moteurs Electriques (IEC) /Acoplamientos Para Motores Eléctricos (IEC)

PLB	IEC 80				IEC 90				IEC 100				IEC 112			
	A	LT	Z	ØD	A	LT	Z	ØD	A	LT	Z	ØD	A	LT	Z	ØD
30003	-				-				-				-			
30004	480	296	56	200	480	296	56	200	480	306	66	250	480	306	66	250

PLB	IEC 132				IEC 160				IEC 180			
	A	LT	Z	ØD	A	LT	Z	ØD	A	LT	Z	ØD
30003	-				442	358	118	350	442	358	118	350
30004	480	340	100	300	480	379	139		-			

PLB	IEC ~ Kg						
	80	90	100	112	132	160	180
30003	-	-	-	-	-	323	323
30004	261	261	262	262	266	276	-

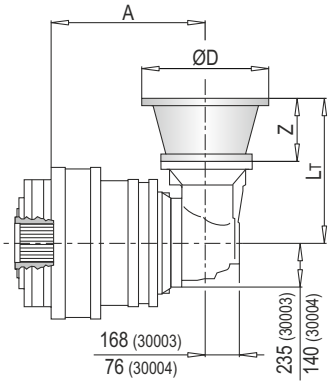

103

PLB 30000 F - Giriş Milleri / Input Shafts / Antriebswellen / Alberi Entrata / Arbres D'entree / Ejes De Entrada

PLB	EL C 28					EL C 42					EML 42					EML 1"3/8 Z6					EM 65				
	A	LT	Z	L	Ød	A	LT	Z	L	Ød	A	LT	Z	L	Ød	A	LT	Z	L	Ød	A	LT	Z	L	Ød
30003	-					-					-					-					442	361.5	121.5	105	65
30004	480	304	64	50	28	480	304	64	82	42	480	334	94	82	42	480	334	94	106	1"3/8	480				

PLB	EM 1"3/8 Z6					EP 65				
	A	LT	Z	L	Ød	A	LT	Z	L	Ød
30003	442	361.5	121.5	105	1"3/8	442	393	153	105	65
30004	480					480				

PLB	~ Kg						
	EL C 28	EL C 42	EML 42	EML 1"3/8 Z6	EM 65	EM 1"3/8 Z6	EP 65
30003	-	-	-	-	318.0	318.0	327.0
30004	259.5	260.0	263.0	263.0	271.0	271.0	280.0

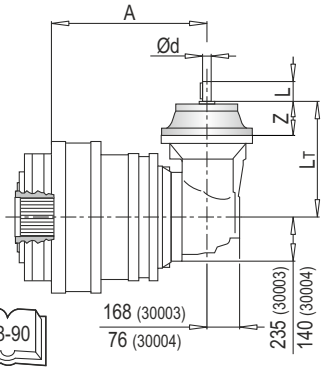

Ød 88-90

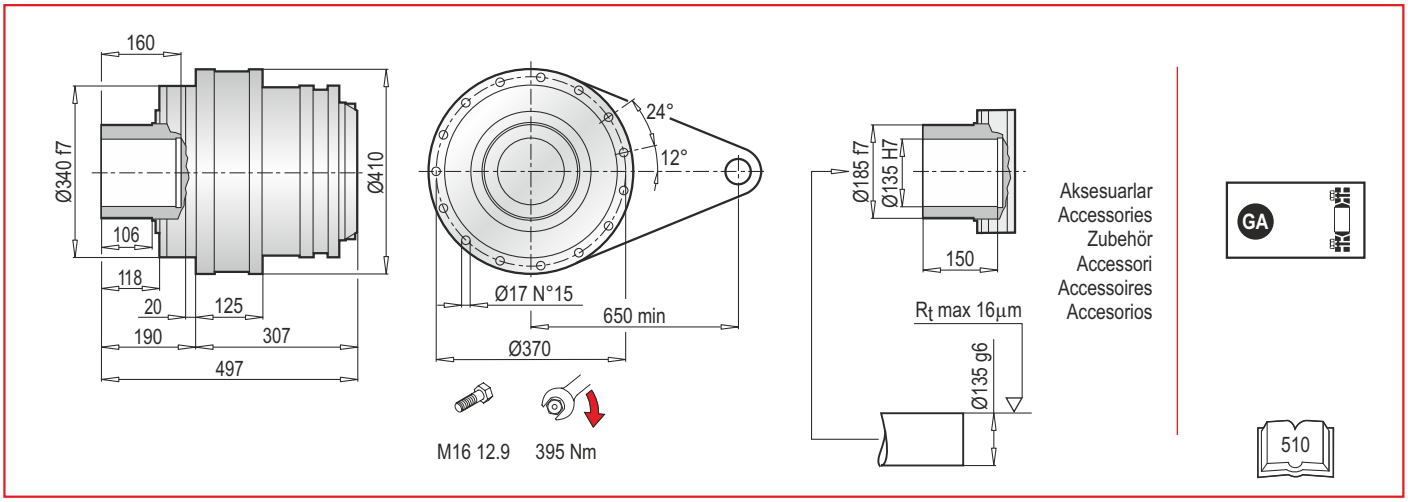

PL 30000 FS - Elektrik Motor Adaptörleri (IEC) / Electric Motor Couplings (IEC) /Anbauvorrichtung Für Elektromotore (IEC) / Predisposizioni Per Motori Elettrici (IEC) / Adaptations Pour Moteurs Electriques (IEC) /Acoplamientos Para Motores Eléctricos (IEC)

PL	IEC 63			IEC 71			IEC 80			IEC 90			IEC 100		
	LT	Z	ØD	LT	Z	ØD	LT	Z	ØD	LT	Z	ØD	LT	Z	ØD
30002	-			-			-			-			-		
30003	414.5	36	140	414.5	36	160	434.5	56	200	434.5	56	200	444.5	66	250
30004	475.5			475.5			495.5			495.5			505.5		

PL	IEC 112			IEC 132			IEC 160			IEC 180			IEC 200		
	LT	Z	ØD	LT	Z	ØD	LT	Z	ØD	LT	Z	ØD	LT	Z	ØD
30002	-			-			425	118	350	425	118	350	455	148	400
30003	444.5	66	250	478.5	100	300	517.5	139		517.5	139		-		
30004	505.5			539.5			578.5			-			-		

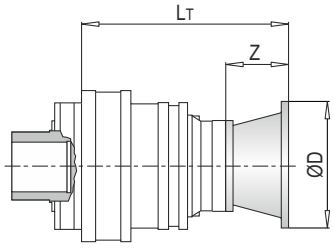

PL	IEC ~ Kg									
	63	71	80	90	100	112	132	160	180	200
30002	-	-	-	-	-	-	-	228	228	238
30003	227	227	229	229	230	230	234	244	244	-
30004	235	235	237	237	238	238	242	252	-	-

PL 30000 FS - Giriş Milleri / Input Shafts / Antriebswellen / Alberi Entrata / Arbres D'entree / Ejes De Entrada

PL	EL C 28				EL C 42				EML 42				EML 1"3/8 Z6				EM 65				EM 1"3/8 Z6			
	LT	Z	L	Ød	LT	Z	L	Ød	LT	Z	L	Ød	LT	Z	L	Ød	LT	Z	L	Ød	LT	Z	L	Ød
30002	-				-				-				-				428.5	121.5	105	65	428.5	121.5	105	1"3/8
30003	442.5	64	50	28	442.5	64	82	42	472.5	94	82	42	472.5	94	106	1"3/8	500				500			
30004	503.5				503.5				533.5				533.5				-				-			

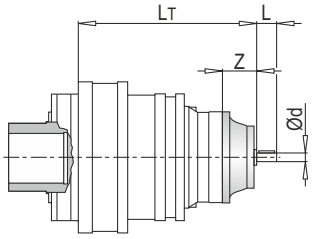

PL	EP 65				ET 90			
	LT	Z	L	Ød	LT	Z	L	Ød
30002	460.0	153	105	65	478.5	171.5	170	90
30003	531.5				-			
30004	-				-			

PL	~ Kg							
	EL C 28	EL C 42	EML 42	EML 1"3/8 Z6	EM 65	EM 1"3/8 Z6	EP 65	ET 90
30002	-	-	-	-	223.0	223.0	232.0	254.0
30003	227.5	228.0	231.0	231.0	239.0	239.0	248.0	-
30004	235.5	236.0	239.0	239.0	-	-	-	-

PL 30000 FS - Sonsuz Dişlili Redüktör Adaptörleri (PMRV/PRV) / Worm Gearbox Adaptors (PMRV/PRV) / Anschluss Für Schneckengetriebe (PMRV/PRV) / Predisposizioni Per Riduttori A Vite Senza Fine (PMRV/PRV) / Adaptation Pour Reducteurs A Vis Sans Fin (PMRV/PRV) / Acoplamiento Para Reductores De Tornillo Sin Fin (PMRV/PRV)

PL	PMRV/PRV 050					PMRV/PRV 063					PMRV/PRV 075				
	LM	l	h	MA	G	LM	l	h	MA	G	LM	l	h	MA	G
30002	-					-					-				
30003	500	50	110	60	80	509	63	135	72	95	488.5	75	161	86	112.5
30004	561					570.5					549.5				

PL	PMRV/PRV 090					PMRV/PRV 110					PMRV/PRV 130				
	LM	l	h	MA	G	LM	l	h	MA	G	LM	l	h	MA	G
30002	-					441	110	237.5	127.5	160	446.5	130	277.5	147.5	180
30003	498.5	90	193	103	129.5	512.5					518				
30004	559.5					-					-				

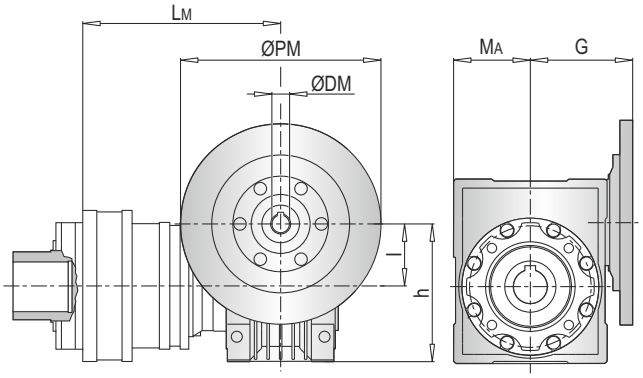

PL	PMRV/PRV 150				
	LM	l	h	MA	G
30002	463	150	320	170	210
30003	534.5				
30004	-				

PL	PMRV/PRV ~ Kg						
	050	063	075	090	110	130	150
30002	-	-	-	-	252	269	305
30003	230	233.5	236	241	268	285	321
30004	238	241.5	244	249	-	-	-

ØPM
ØDM
105

PLB 30000 FS - Elektrik Motor Adaptörleri (IEC) / Electric Motor Couplings (IEC) / Anbauvorrichtung Für Elektromotore (IEC) / Predisposizioni Per Motori Elettrici (IEC) / Adaptations Pour Moteurs Electriques (IEC) / Acoplamientos Para Motores Eléctricos (IEC)

PLB	IEC 80				IEC 90				IEC 100				IEC 112			
	A	LT	Z	ØD	A	LT	Z	ØD	A	LT	Z	ØD	A	LT	Z	ØD
30003	-				-				-				-			
30004	480	296	56	200	480	296	56	200	480	306	66	250	480	306	66	250

PLB	IEC 132				IEC 160				IEC 180			
	A	LT	Z	ØD	A	LT	Z	ØD	A	LT	Z	ØD
30003	-				442	358	118	350	442	358	118	350
30004	480	340	100	300	480	379	139		-			

PLB	IEC ~ Kg						
	80	90	100	112	132	160	180
30003	-	-	-	-	-	333	333
30004	269	269	270	270	274	284	-

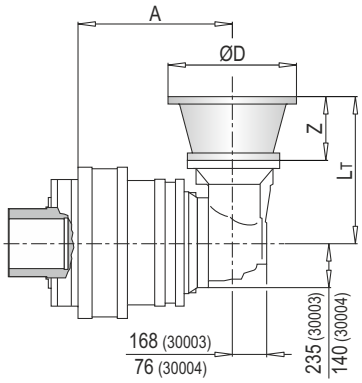

103

PLB 30000 FS - Giriş Milleri / Input Shafts / Antriebswellen / Alberi Entrata / Arbres D'entree / Ejes De Entrada

PLB	EL C 28					EL C 42					EML 42					EML 1"3/8 Z6					EM 65				
	A	LT	Z	L	Ød	A	LT	Z	L	Ød	A	LT	Z	L	Ød	A	LT	Z	L	Ød	A	LT	Z	L	Ød
30003	-					-					-					-					442	361.5	121.5	105	65
30004	482	304	64	50	28	482	304	64	82	42	482	334	94	82	42	482	334	94	106	1"3/8	482				

PLB	EM 1"3/8 Z6					EP 65				
	A	LT	Z	L	Ød	A	LT	Z	L	Ød
30003	442	361.5	121.5	105	1"3/8	442	393	153	105	65
30004	482					482				

PLB	~ Kg						
	EL C 28	EL C 42	EML 42	EML 1"3/8 Z6	EM 65	EM 1"3/8 Z6	EP 65
30003	-	-	-	-	328.0	328.0	337.0
30004	267.5	268.0	271.0	271.0	279.0	279.0	288.0

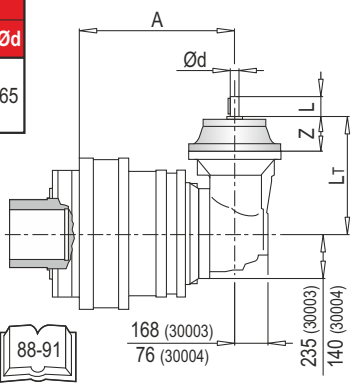

Ød 88-91

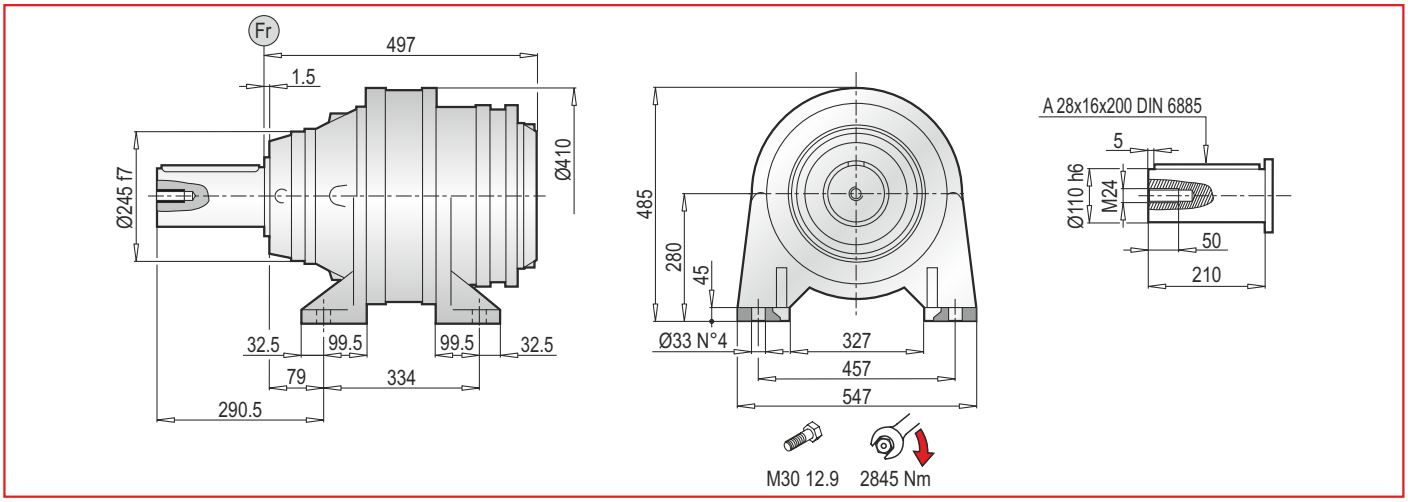

PL 30000 CPC - Elektrik Motor Adaptörleri (IEC) / Electrıc Motor Couplings (IEC) / Anbauvorrichtung Für Elektromotore (IEC) / Predisposizioni Per Motori Elettrici (IEC) / Adaptations Pour Moteurs Electriques (IEC) / Acoplamientos Para Motores Eléctricos (IEC)

PL	IEC 63			IEC 71			IEC 80			IEC 90			IEC 100		
	LT	Z	ØD	LT	Z	ØD	LT	Z	ØD	LT	Z	ØD	LT	Z	ØD
30002	-			-			-			-			-		
30003	604.5	36	140	604.5	36	160	624.5	56	200	634.5	56	200	644.5	66	250
30004	665.5			665.5			685.5			695.5			705.5		

PL	IEC 112			IEC 132			IEC 160			IEC 180			IEC 200		
	LT	Z	ØD	LT	Z	ØD	LT	Z	ØD	LT	Z	ØD	LT	Z	ØD
30002	-			-			615	118	350	615	118	350	645	148	400
30003	644.5	66	250	668.5	100	300	707.5	139		707.5	139		-		
30004	705.5			729.5			768.5			-			-		

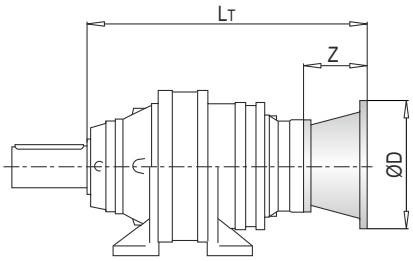

PL	IEC ~ Kg									
	63	71	80	90	100	112	132	160	180	200
30002	-	-	-	-	-	-	-	322	322	332
30003	323	323	325	325	326	326	330	340	340	-
30004	331	331	333	333	334	334	338	348	-	-

PL 30000 CPC - Giriş Milleri / Input Shafts / Antriebswellen / Alberi Entrata / Arbres D'entree / Ejes De Entrada

PL	EL C 28				EL C 42				EML 42				EML 1"3/8 Z6				EM 65				EM 1"3/8 Z6			
	LT	Z	L	Ød	LT	Z	L	Ød	LT	Z	L	Ød	LT	Z	L	Ød	LT	Z	L	Ød	LT	Z	L	Ød
30002	-				-				-				-				618.5	121.5	105	65	618.5	121.5	105	1"3/8
30003	632.5	64	50	28	632.5	64	82	42	662.5	94	82	42	662.5	94	106	1"3/8	690				690			
30004	693.5				693.5				723.5				723.5				-				-			

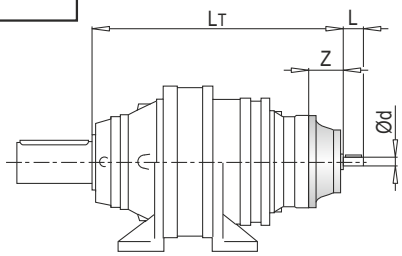

PL	EP 65				ET 90			
	LT	Z	L	Ød	LT	Z	L	Ød
30002	650	153	105	65	668.5	171.5	170	90
30003	721.5				-			
30004	-				-			

PL	~ Kg							
	EL C 28	EL C 42	EML 42	EML 1"3/8 Z6	EM 65	EM 1"3/8 Z6	EP 65	ET 90
30002	-	-	-	-	317.0	317.0	326.0	348
30003	323.5	324.0	327.0	327.0	335.0	335.0	344.0	-
30004	331.5	332.0	335.0	335.0	-	-	-	-

PL 30000 CPC - Sonsuz Dişlili Redüktör Adaptörleri (PMRV/PRV) / Worm Gearbox Adaptors (PMRV/PRV) / Anschluss Für Schneckengetriebe (PMRV/PRV) / Predisposizioni Per Riduttori A Vite Senza Fine (PMRV/PRV) / Adaptation Pour Reducteurs A Vis Sans Fin (PMRV/PRV) / Acoplamiento Para Reductores De Tornillo Sin Fin (PMRV/PRV)

PL	PMRV/PRV 050					PMRV/PRV 063					PMRV/PRV 075				
	LM	l	h	MA	G	LM	l	h	MA	G	LM	l	h	MA	G
30002	-					-					-				
30003	690	50	110	60	80	699.5	63	135	72	95	678.5	75	161	86	112.5
30004	751					760.5					739.5				

PL	PMRV/PRV 090					PMRV/PRV 110					PMRV/PRV 130				
	LM	l	h	MA	G	LM	l	h	MA	G	LM	l	h	MA	G
30002	-					631	110	237.5	127.5	160	636.5	130	277.5	147.5	180
30003	688.5	90	193	103	129.5	702.5					708				
30004	749.5					-					-				

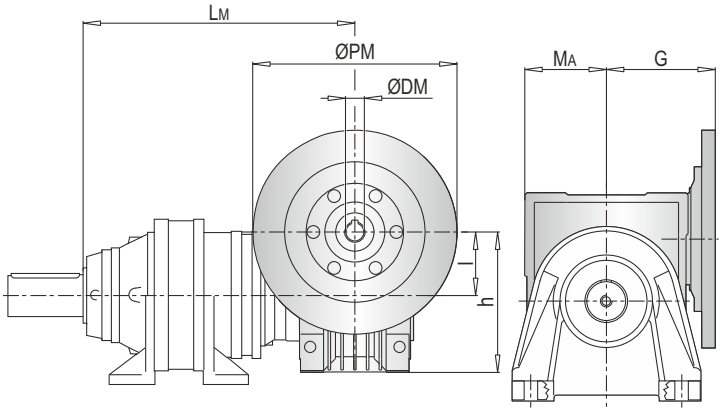

PL	PMRV/PRV 150				
	LM	l	h	MA	G
30002	653	150	320	170	210
30003	724.5				
30004	-				

PL	PMRV/PRV ~ Kg						
	050	063	075	090	110	130	150
30002	-	-	-	-	346	363	399
30003	326	329.5	332	337	364	381	417
30004	334	337.5	340	345	-	-	-

ØPM
ØDM
105

PLB 30000 CPC - Elektrik Motor Adaptörleri (IEC) / Electric Motor Couplings (IEC) / Anbauvorrichtung Für Elektromotore (IEC) / Predisposizioni Per Motori Elettrici (IEC) / Adaptations Pour Moteurs Electriques (IEC) / Acoplamientos Para Motores Eléctricos (IEC)

PLB	IEC 80				IEC 90				IEC 100				IEC 112			
	A	LT	Z	ØD	A	LT	Z	ØD	A	LT	Z	ØD	A	LT	Z	ØD
30003	-				-				-				-			
30004	672	296	56	200	672	296	56	200	672	306	66	250	672	306	66	250

PLB	IEC 132				IEC 160				IEC 180			
	A	LT	Z	ØD	A	LT	Z	ØD	A	LT	Z	ØD
30003	-				634	358	118	350	634	358	118	350
30004	672	340	100	300	672	379	139		-			

PLB	IEC ~ Kg						
	80	90	100	112	132	160	180
30003	-	-	-	-	-	423	423
30004	365	365	366	366	370	380	-

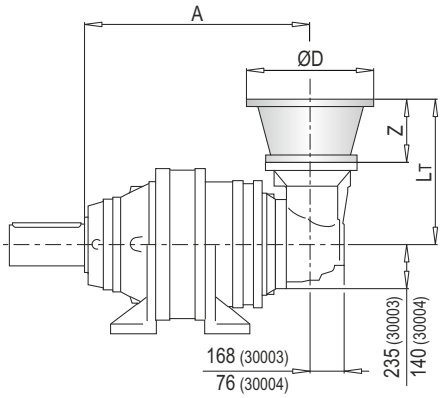

103

PLB 30000 CPC - Giriş Milleri / Input Shafts / Antriebswellen / Alberi Entrata / Arbres D'entree / Ejes De Entrada

PLB	EL C 28					EL C 42					EML 42					EML 1"3/8 Z6					EM 65				
	A	LT	Z	L	Ød	A	LT	Z	L	Ød	A	LT	Z	L	Ød	A	LT	Z	L	Ød	A	LT	Z	L	Ød
30003	-					-					-					-					634	361.5	121.5	105	65
30004	672	304	64	50	28	672	304	64	82	42	672	334	94	82	42	672	334	94	106	1"3/8	672				

PLB	EM 1"3/8 Z6					EP 65				
	A	LT	Z	L	Ød	A	LT	Z	L	Ød
30003	634	361.5	121.5	105	1"3/8	634	393	153	105	65
30004	672					672				

PLB	~ Kg						
	EL C 28	EL C 42	EML 42	EML 1"3/8 Z6	EM 65	EM 1"3/8 Z6	EP 65
30003	-	-	-	-	418.0	418.0	427.0
30004	363.5	364.0	367.0	367.0	375.0	375.0	384.0

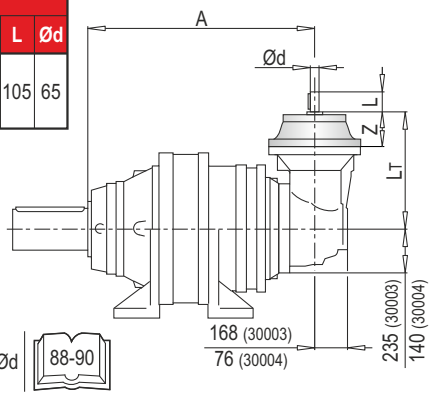

Ød 88-90

AKSESUARLAR / ACCESSORIES / ZUBEHÖR / ACCESSORI / ACCESSOIRES / ACCESORIOS

BS
Spline kaplin / Splined bushing / Innenverzahnte Buchse
Boccola scanalata / Moyeu cannelé / Casquillo ranurado

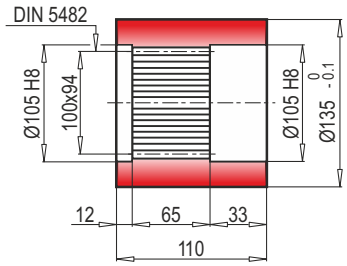

Malzeme / Material
Material / Materiale
Matière / Material
UNI C40
SAE 1040
DIN Ck40

Kod / Code
Bestell - Nr. / Codice
Code / Código
8171.112.041

KB
Spline mil / Splined rod / Außenverzahnte Welle
Barra scanalata / Arbre cannelé / Barra ranurada

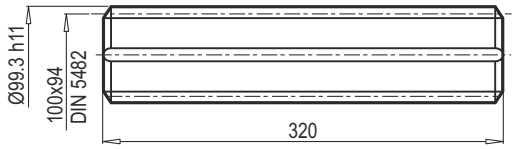

Malzeme / Material
Material / Materiale
Matière / Material

UNI 39NiCrMo3
Sertleşmiş ve tavlanmış / Hardened and tempered
Vergütet / Bonifié
Bonificado / Endurecido e temperado

Kod / Code
Bestell - Nr. / Codice
Code / Código
3071.407.042

FL
Flanş / Flange / Flansch
Flangia / Bride / Brida

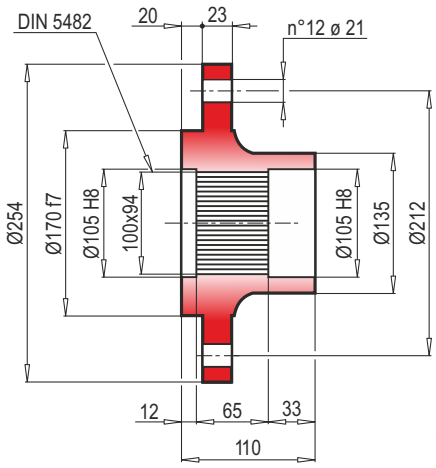

Kod / Code
Bestell - Nr. / Codice
Code / Código
8171.104.098

GA
Konik sıktırma / Shrink disc / Schrumpfscheibe
Giunto di attrito / Frette de serrage / Disco de contracción

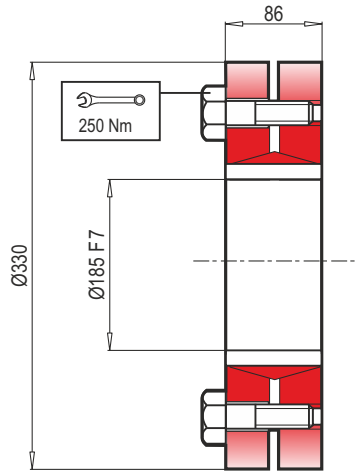

Maksimum moment
Max. torque
Max. Drehmoment
Coppia max.
Couple max.
Momento máx.
52 kNm

Kod / Code
Bestell - Nr. / Codice
Code / Código
5109.185.000

FF
Sabitleme rondelası / Stop bottom plate / Endscheibe
Fondello di arresto / Bouchon de fermeture / Tapón de detención

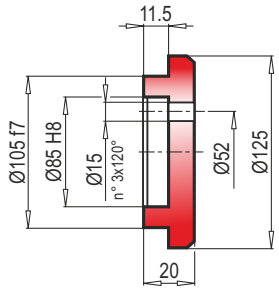

Kod / Code
Bestell - Nr. / Codice
Code / Código
1075.042.000

TR RADYAL YÜKLER (Fr)

Aşağıdaki grafikler istenilen $n_2$xh değerinin elde edilmesi için gerekli olan radyal yükleri ve K faktörlerini göstermektedir.

EN RADIAL LOADS (Fr)

The following curves show the radial loads and the K factors to obtain the required n2xh value.

DE RADIALLAST (Fr)

In den nachstehenden Diagrammen ist die Radiallast un der Koeffizient K dargestellt und kann mit dem gewünschten Wert $n_2$xh verglichen werden.

IT CARICHI RADIALI (Fr)

Nei diagrammi seguenti sono riportati i carichi radiali e i coefficienti K per rapportarli al valore $n_2$xh desiderato.

FR CHARGES RADIALES (Fr)

Dans les diagrammes suivants sont indiqués les charges radiales et les facteurs K de façon à obtenir la valeur $n_2$xh désirée.

ES CARGAS RADIALES (Fr)

En los siguientes diagramas se indican las cargas radiales y los coefici - entes K para obtener el valor requerido $n_2$xh.

M - P - CPC*

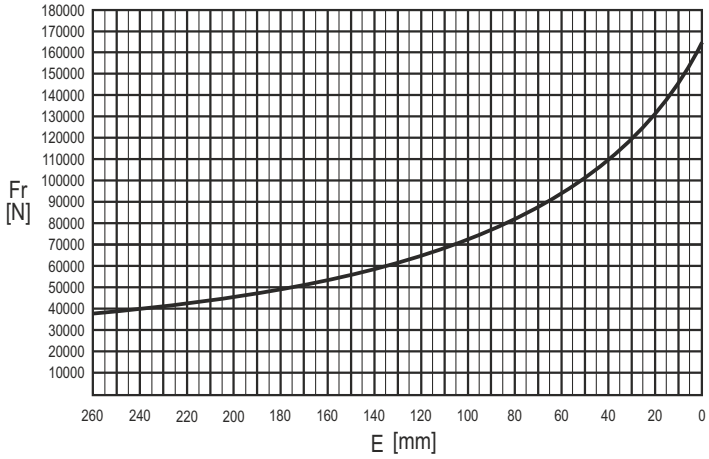

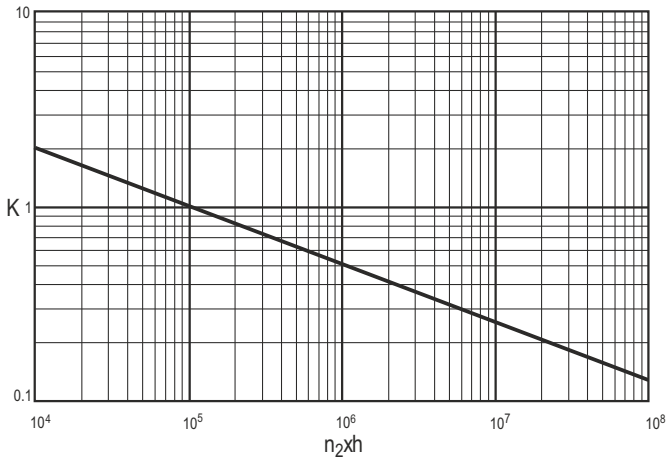

	n x h				
	10^5	10^4	10^6	10^7	10^8
M	Fr	Fr • K			
CPC*	Fr • 0.75	Fr • K • 0.75			

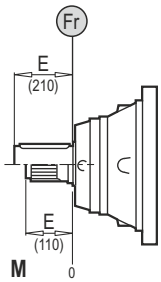

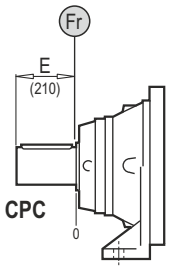

TR EKSENEL YÜKLER (Fa)

Tabloda yer alan eksenel yük değerleri, çıkış tipine ve uygulamanın yük yönüne göre değişir.

EN AXIAL LOADS (Fa)

The values of the axial loads in the table refer to the output versions and load direction of application.

DE AXIALLAST (Fa)

Die dargestellten Werte der Axiallast basieren auf der Version und der applizierten Lastrichtung.

IT CARICHI ASSIALI (Fa)

I valori dei carichi assiali indicati in tabella sono riferiti alle versioni e alla direzione di applicazione del carico.

FR CHARGES AXIALES (Fa)

Les valeurs des charges axiales indiquées dans le tableau se réfèrent aux versions et à la direction d'application de lacharge.

ES CARGAS AXIALES (Fa)

Los valores de las cargas axiales indicados en la tabla se refieren a las versiones y a la dirección de aplicación de la carga.

Fa [N]	M	CPC	
	75000	75000	←
	95000	95000	→

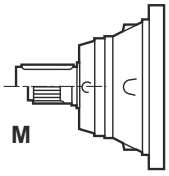

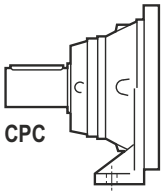

TEKNİK VERİLER / TECHNICAL DATA / TECHNISCHE DATEN / DATI TECNICI / DONNÉES TECHNIQUES / DATOS TÉCNICAS

	i_{ges}	M_2max (n1: 1400rpm) (Nm)
35001	4.00 ... 4.71	15870
35002	14.2 ... 27.0	21610
35003	53.7 ... 230.3	27380
35004	191.0 ... 1289.7	36840

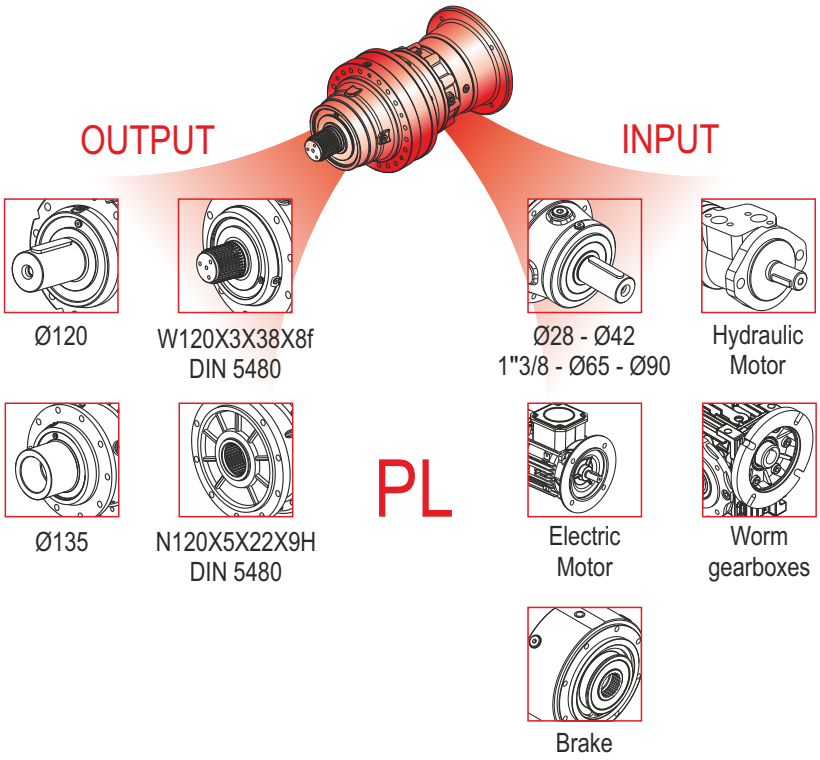

	i_{ges}	M_2max (n1: 1400rpm) (Nm)
35002	12.3 ... 22.0	20850
35003	43.7 ... 123.0	26970
35004	185.6 ... 1253.8	36840

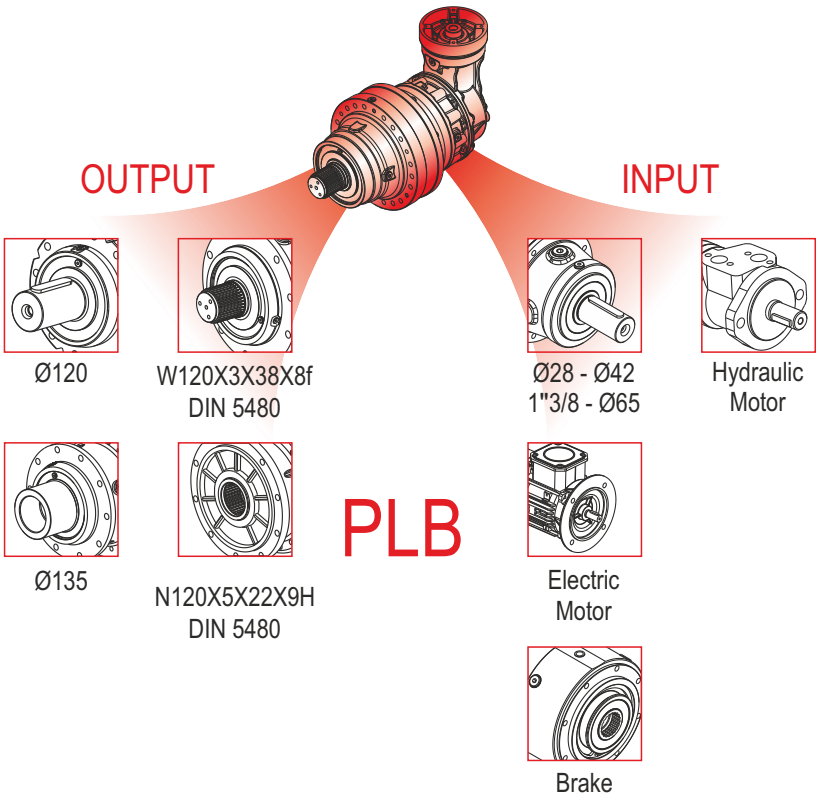

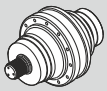	Pt [kW]	n_{1max} [min^{-1}]	i_{ges}	Mc [kNm]				Giriş- Input - Antrieb - Entrata - Entrée - Entrada		
				n_2 x h	n_2 x h	n_2 x h	n_2 x h			
				10.000	20.000	50.000	100.000	IEC (B5)	PMRV / PRV	EL - EML EM - EP - ET
PL 35001	54	1500	4.00 4.71	43.22 36.83	38.25 32.60	32.55 27.74	28.82 24.55	160 180 200 225 250	-	-
PL 35002	34	2000	14.2 17.1 20.2 22.4 27.0	43.22 43.22 36.83 43.22 36.83	38.25 38.25 32.60 38.25 32.60	32.55 32.55 27.74 32.55 27.74	28.82 28.82 24.55 28.82 24.55	160 180 200	110 130 150	EM 65 EM 1"3/8 Z6 EP 65 ET 90
PL 35003	23	2800	53.7 58.7 64.8 70.7 83.2 88.6 99.6 108.7 121.0 136.2 158.1 164.1 191.1 230.3	43.22 43.22 43.22 43.22 36.83 43.22 36.83 36.83 36.83 36.83 36.83 36.83 36.83 36.83	38.25 38.25 38.25 38.25 32.60 38.25 32.60 32.60 32.60 32.60 32.60 32.60 32.60 32.60	32.55 32.55 32.55 32.55 27.74 32.55 27.74 27.74 27.74 27.74 27.74 27.74 27.74 27.74	28.82 28.82 28.82 28.82 24.55 28.82 24.55 24.55 24.55 24.55 24.55 24.55 24.55 24.55	63 71 80 90 100 112 132 160 180	050 063 075 090 110 130 150	EL C 28 EL C 42 EML 42 EML 1"3/8 Z6 EM 65 EM 1"3/8 Z6 EP 65
PL 35004	17	2800	191.0 208.6 230.3 251.4 277.5 303.1 328.5 362.7 379.6 437.1 496.0 583.5 677.7 703.4 762.5 816.8 987.0 1067.3 1289.7	43.22 43.22 43.22 43.22 43.22 43.22 43.22 43.22 43.22 43.22 43.22 36.83 36.83 36.83 36.83 36.83 36.83 36.83 36.83	38.25 38.25 38.25 38.25 38.25 38.25 38.25 38.25 38.25 38.25 38.25 32.60 32.60 32.60 32.60 32.60 32.60 32.60 32.60	32.55 32.55 32.55 32.55 32.55 32.55 32.55 32.55 32.55 32.55 32.55 27.74 27.74 27.74 27.74 27.74 27.74 27.74 27.74	28.82 28.82 28.82 28.82 28.82 28.82 28.82 28.82 28.82 28.82 28.82 24.55 24.55 24.55 24.55 24.55 24.55 24.55 24.55	63 71 80 90 100 112 132 160 180	050 063 075 090	EL C 28 EL C 42 EML 42 EML 1"3/8 Z6

	Pt [kW]	n_{1max} [min^{-1}]	i_{ges}	Mc [kNm]				Giriş- Input - Antrieb - Entrata - Entrée - Entrada	
				n_2 x h	n_2 x h	n_2 x h	n_2 x h		
				10.000	20.000	50.000	100.000	IEC (B5)	EL - EML EM - EP - ET
PLB 35002	34	2000	12.3 14.5 18.7 22.0	43.22 36.83 43.22 36.83	38.25 32.60 38.25 32.60	32.55 27.74 32.55 27.74	28.82 24.55 28.82 24.55	160 180 200	EM 65 EM 1"3/8 Z6 EP 65
PLB 35003	23	2800	43.7 52.7 66.4 80.0 94.1 123.0	43.22 43.22 43.22 43.22 36.83 36.83	38.25 38.25 38.25 38.25 32.60 32.60	32.55 32.55 32.55 32.55 27.74 27.74	28.82 28.82 28.82 28.82 24.55 24.55	160 180	EM 65 EM 1"3/8 Z6 EP 65
PLB 35004	17	2800	185.6 202.7 223.7 244.3 292.5 319.4 352.6 385.0 414.8 452.9 542.0 591.8 658.8 741.3 860.9 1037.7 1253.8	43.22 43.22 43.22 43.22 43.22 43.22 43.22 43.22 36.83 36.83 36.83 36.83 36.83 36.83 36.83 36.83 36.83	38.25 38.25 38.25 38.25 38.25 38.25 38.25 38.25 32.60 32.60 32.60 32.60 32.60 32.60 32.60 32.60 32.60	32.55 32.55 32.55 32.55 32.55 32.55 32.55 32.55 27.74 27.74 27.74 27.74 27.74 27.74 27.74 27.74 27.74	28.82 28.82 28.82 28.82 28.82 28.82 28.82 28.82 24.55 24.55 24.55 24.55 24.55 24.55 24.55 24.55 24.55	80 90 100 112 132 160	EL C 28 EL C 42 EML 42 EML 1"3/8 Z6 EM 65 EM 1"3/8 Z6 EP 65

(n_2 x h = 20.000)

$$M_{max} = M_C \times 1.65$$

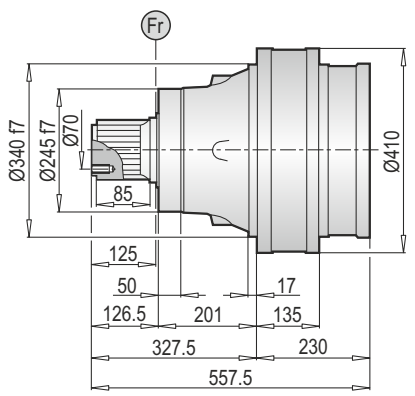

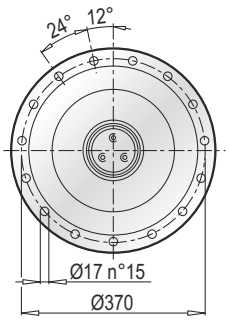

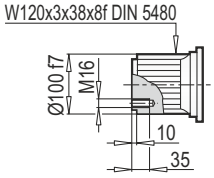

Aksesuarlar
Accessories
Zubehör
Accessori
Accessoires
Accesorios

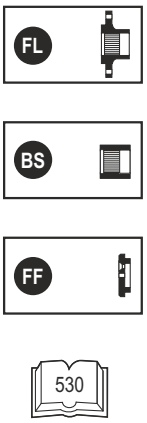

PL 35000 MS - Elektrik Motor Adaptörleri (IEC) / Electrıc Motor Couplings (IEC) / Anbauvorrichtung Für Elektromotore (IEC) / Predisposizioni Per Motori Elettrici (IEC) / Adaptations Pour Moteurs Electriques (IEC) / Acoplamientos Para Motores Eléctricos (IEC)

PL	IEC 63			IEC 71			IEC 80			IEC 90			IEC 100			IEC 112		
	LT	Z	ØD	LT	Z	ØD	LT	Z	ØD	LT	Z	ØD	LT	Z	ØD	LT	Z	ØD
35001	-			-			-			-			-			-		
35002	-			-			-			-			-			-		
35003	424.5	36	140	424.5	36	160	444.5	56	200	444.5	56	200	454.5	66	250	454.5	66	250
35004	485.5			485.5			505.5			505.5			515.5			515.5		

PL	IEC 132			IEC 160			IEC 180			IEC 200			IEC 225			IEC 250		
	LT	Z	ØD	LT	Z	ØD	LT	Z	ØD	LT	Z	ØD	LT	Z	ØD	LT	Z	ØD
35001	-			380	150	350	380	150	350	380	150	400	369	139	450	369	139	550
35002	-			435	118		435	118		435	148		-			-		
35003	488.5	100	300	527.5	139		527.5	139		-			-			-		
35004	549.5			588.5			588.5			-			-			-		

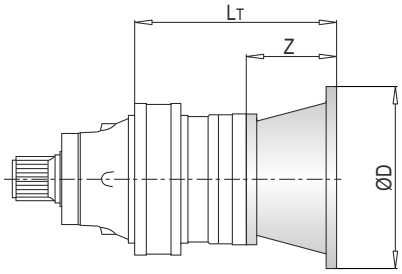

PL	IEC ~ Kg											
	63	71	80	90	100	112	132	160	180	200	225	250
35001	-	-	-	-	-	-	-	240	240	245	251	263
35002	-	-	-	-	-	-	-	267	267	277	-	-
35003	266	266	268	268	269	269	273	283	283	-	-	-
35004	274	274	276	276	277	277	281	291	291	-	-	-

PL 35000 MS - Giriş Milleri / Input Shafts / Antriebswellen / Alberi Entrata / Arbres D'entree / Ejes De Entrada

PL	EL C 28				EL C 42				EML 42				EML 1"3/8 Z6				EM 65				EM 1"3/8 Z6			
	LT	Z	L	Ød	LT	Z	L	Ød	LT	Z	L	Ød	LT	Z	L	Ød	LT	Z	L	Ød	LT	Z	L	Ød
35002	-				-				-				-				438.5	121.5	105	65	438.5	121.5	105	1"3/8
35003	452.5	64	50	28	452.5	64	82	42	482.5	94	82	42	482.5	94	106	1"3/8	510				510			
35004	513.5				513.5				543.5				543.5				-				-			

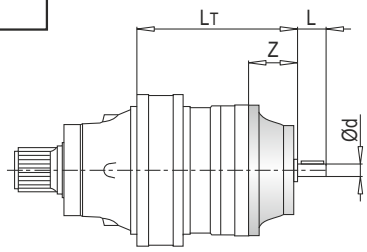

PL	EP 65				ET 90			
	LT	Z	L	Ød	LT	Z	L	Ød
35002	470	153	105	65	488.5	171.5	170	90
35003	541.5				-			
35004	-				-			

PL	~ Kg							
	EL C 28	EL C 42	EML 42	EML 1"3/8 Z6	EM 65	EM 1"3/8 Z6	EP 65	ET 90
35002	-	-	-	-	262.0	262.0	271.0	293.0
35003	266.5	267.0	270.0	270.0	278.0	278.0	287.0	-
35004	274.5	275.0	278.0	278.0	-	-	-	-

PL 35000 MS - Sonsuz Dişlili Redüktör Adaptörleri (PMRV/PRV) / Worm Gearbox Adaptors (PMRV/PRV) / Anschluss Für Schneckengetriebe (PMRV/PRV) / Predisposizioni Per Riduttori A Vite Senza Fine (PMRV/PRV) / Adaptation Pour Reducteurs A Vis Sans Fin (PMRV/PRV) / Acoplamiento Para Reductores De Tornillo Sin Fin (PMRV/PRV)

PL	PMRV/PRV 050					PMRV/PRV 063					PMRV/PRV 075				
	LM	l	h	MA	G	LM	l	h	MA	G	LM	l	h	MA	G
35002	-					-					-				
35003	510	50	110	60	80	519.5	63	135	72	95	498.5	75	161	86	112.5
35004	571					580.5					559.5				

PL	PMRV/PRV 090					PMRV/PRV 110					PMRV/PRV 130				
	LM	l	h	MA	G	LM	l	h	MA	G	LM	l	h	MA	G
35002	-					451	110	237.5	127.5	160	456.5	130	277.5	147.5	180
35003	508.5	90	193	103	129.5	522.5					528				
35004	569.5					-					-				

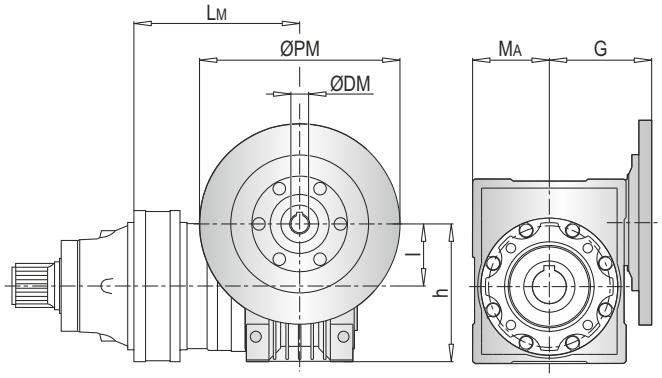

PL	PMRV/PRV 150				
	LM	l	h	MA	G
35002	473	150	320	170	210
35003	605.5				
35004	-				

PL	PMRV/PRV ~ Kg						
	050	063	075	090	110	130	150
35002	-	-	-	-	291	308	344
35003	269	272.5	275	280	307	324	360
35004	277	280.5	282	287	-	-	-

ØPM
ØDM
105

PLB 35000 MS - Elektrik Motor Adaptörleri (IEC) / Electric Motor Couplings (IEC) / Anbauvorrichtung Für Elektromotore (IEC) / Predisposizioni Per Motori Elettrici (IEC) / Adaptations Pour Moteurs Electriques (IEC) / Acoplamientos Para Motores Eléctricos (IEC)

PLB	IEC 80				IEC 90				IEC 100				IEC 112			
	A	LT	Z	ØD	A	LT	Z	ØD	A	LT	Z	ØD	A	LT	Z	ØD
35002	-				-				-				-			
35003	-				-				-				-			
35004	490	296	56	200	490	296	56	200	490	306	66	250	490	306	66	250

PLB	IEC 132				IEC 160				IEC 180				IEC 200			
	A	LT	Z	ØD	A	LT	Z	ØD	A	LT	Z	ØD	A	LT	Z	ØD
35002	-				295	433	118	350	295	433	118	350	295	463	148	400
35003	-				452				452				-			
35004	490	340	100	300	490	379	139		-				-			

PLB	IEC ~ Kg							
	80	90	100	112	132	160	180	200
35002	-	-	-	-	-	309	309	319
35003	-	-	-	-	-	368	368	-
35004	308	308	309	309	313	323	-	-

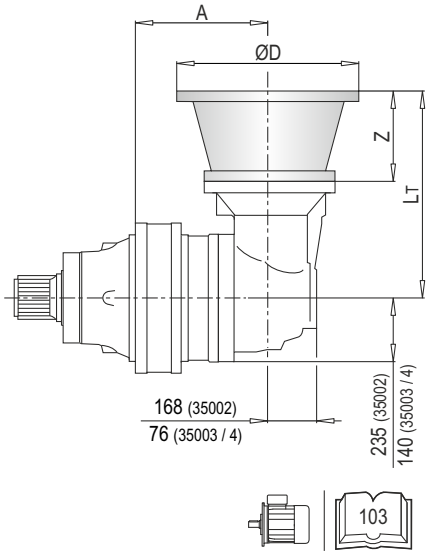

PLB 35000 MS - Giriş Milleri / Input Shafts / Antriebswellen / Alberi Entrata / Arbres D'entree / Ejes De Entrada

PLB	EL C 28					EL C 42					EML 42					EML 1"3/8 Z6					EM 65				
	A	LT	Z	L	Ød	A	LT	Z	L	Ød	A	LT	Z	L	Ød	A	LT	Z	L	Ød	A	LT	Z	L	Ød
35002	-					-					-					-					295	436.5	121.5	105	65
35003	-					-					-					-					452	361.5			
35004	490	304	64	50	28	490	304	64	82	42	490	334	94	82	42	490	334	94	106	1"3/8	490				

PLB	EM 1"3/8 Z6					EP 65				
	A	LT	Z	L	Ød	A	LT	Z	L	Ød
35002	295	436.5	121.5	105	1"3/8	295	468	153	105	65
35003	452	361.5				452	393			
35004	490					490				

PLB	~ Kg						
	EL C 28	EL C 42	EML 42	EML 1"3/8 Z6	EM 65	EM 1"3/8 Z6	EP 65
35002	-	-	-	-	304.0	304.0	313.0
35003	-	-	-	-	363.0	363.0	372.0
35004	306.5	307.0	310.0	310.0	318.0	318.0	327.0

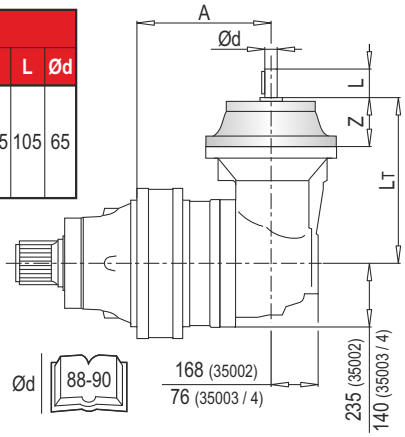

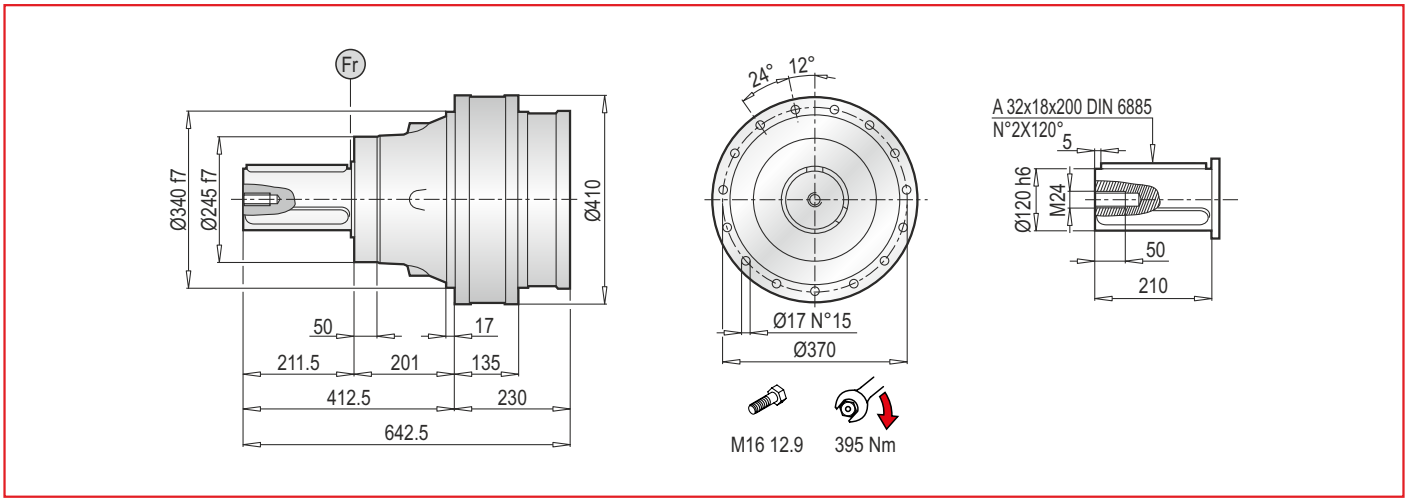

PL 35000 MC - Elektrik Motor Adaptörleri (IEC) / Electrıc Motor Couplings (IEC) / Anbauvorrichtung Für Elektromotore (IEC) / Predisposizioni Per Motori Elettrici (IEC) / Adaptations Pour Moteurs Electriques (IEC) / Acoplamientos Para Motores Eléctricos (IEC)

PL	IEC 63			IEC 71			IEC 80			IEC 90			IEC 100			IEC 112		
	LT	Z	ØD	LT	Z	ØD	LT	Z	ØD	LT	Z	ØD	LT	Z	ØD	LT	Z	ØD
35001	-			-			-			-			-			-		
35002	-			-			-			-			-			-		
35003	424.5	36	140	424.5	36	160	444.5	56	200	444.5	56	200	454.5	66	250	454.5	66	250
35004	485.5			485.5			505.5			505.5			515.5			515.5		

PL	IEC 132			IEC 160			IEC 180			IEC 200			IEC 225			IEC 250		
	LT	Z	ØD	LT	Z	ØD	LT	Z	ØD	LT	Z	ØD	LT	Z	ØD	LT	Z	ØD
35001	-			380	150	350	380	150	350	380	150	400	369	139	450	369	139	550
35002	-			435	118		435	118		435	148		-			-		
35003	488.5	100	300	527.5	139		527.5	139		-			-			-		
35004	549.5			588.5			588.5			-			-			-		

PL	IEC ~ Kg											
	63	71	80	90	100	112	132	160	180	200	225	250
35001	-	-	-	-	-	-	-	240	240	245	251	263
35002	-	-	-	-	-	-	-	267	267	277	-	-
35003	266	266	268	268	269	269	273	283	283	-	-	-
35004	274	274	276	276	277	277	281	291	291	-	-	-

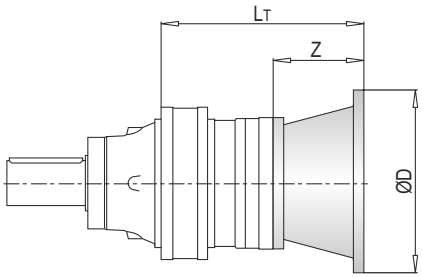

PL 35000 MC - Giriş Milleri / Input Shafts / Antriebswellen / Alberi Entrata / Arbres D'entree / Ejes De Entrada

PL	EL C 28				EL C 42				EML 42				EML 1"3/8 Z6				EM 65				EM 1"3/8 Z6			
	LT	Z	L	Ød	LT	Z	L	Ød	LT	Z	L	Ød	LT	Z	L	Ød	LT	Z	L	Ød	LT	Z	L	Ød
35002	-				-				-				-				438.5	121.5	105	65	438.5	121.5	105	1"3/8
35003	452.5	64	50	28	452.5	64	82	42	482.5	94	82	42	482.5	94	106	1"3/8	510				510			
35004	513.5				513.5				543.5				543.5				-				-			

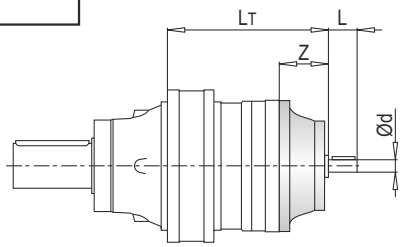

PL	EP 65				ET 90			
	LT	Z	L	Ød	LT	Z	L	Ød
35002	470	153	105	65	488.5	171.5	170	90
35003	541.5				-			
35004	-				-			

PL	~ Kg							
	EL C 28	EL C 42	EML 42	EML 1"3/8 Z6	EM 65	EM 1"3/8 Z6	EP 65	ET 90
35002	-	-	-	-	262.0	262.0	271.0	293.0
35003	266.5	267.0	270.0	270.0	278.0	278.0	287.0	-
35004	274.5	275.0	278.0	278.0	-	-	-	-

PL 35000 MC - Sonsuz Dişlili Redüktör Adaptörleri (PMRV/PRV) / Worm Gearbox Adaptors (PMRV/PRV) / Anschluss Für Schneckengetriebe (PMRV/PRV) / Predisposizioni Per Riduttori A Vite Senza Fine (PMRV/PRV) / Adaptation Pour Reducteurs A Vis Sans Fin (PMRV/PRV) / Acoplamiento Para Reductores De Tornillo Sin Fin (PMRV/PRV)

PL	PMRV/PRV 050					PMRV/PRV 063					PMRV/PRV 075				
	LM	l	h	MA	G	LM	l	h	MA	G	LM	l	h	MA	G
35002	-					-					-				
35003	510	50	110	60	80	519.5	63	135	72	95	498.5	75	161	86	112.5
35004	571					580.5					559.5				

PL	PMRV/PRV 090					PMRV/PRV 110					PMRV/PRV 130				
	LM	l	h	MA	G	LM	l	h	MA	G	LM	l	h	MA	G
35002	-					451	110	237.5	127.5	160	456.5	130	277.5	147.5	180
35003	508.5	90	193	103	129.5	522.5					528				
35004	569.5					-					-				

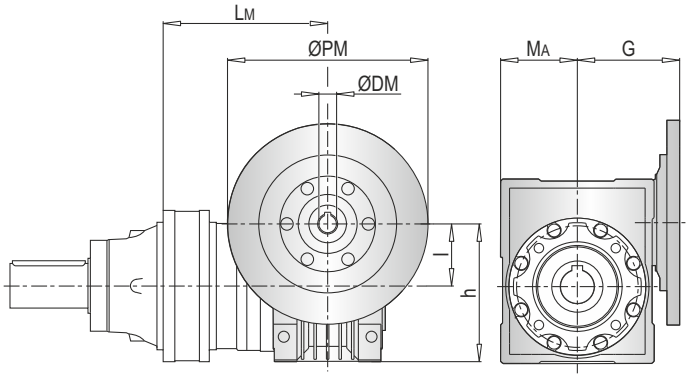

PL	PMRV/PRV 150				
	LM	l	h	MA	G
35002	473	150	320	170	210
35003	605.5				
35004	-				

PL	PMRV/PRV ~ Kg						
	050	063	075	090	110	130	150
35002	-	-	-	-	291	308	344
35003	269	272.5	275	280	307	324	360
35004	277	280.5	282	287	-	-	-

ØPM
ØDM
105

PLB 35000 MC - Elektrik Motor Adaptörleri (IEC) / Electric Motor Couplings (IEC) / Anbauvorrichtung Für Elektromotore (IEC) / Predisposizioni Per Motori Elettrici (IEC) / Adaptations Pour Moteurs Electriques (IEC) / Acoplamientos Para Motores Eléctricos (IEC)

PLB	IEC 80				IEC 90				IEC 100				IEC 112			
	A	LT	Z	ØD	A	LT	Z	ØD	A	LT	Z	ØD	A	LT	Z	ØD
35002	-				-				-				-			
35003	-				-				-				-			
35004	490	296	56	200	490	296	56	200	490	306	66	250	490	306	66	250

PLB	IEC 132				IEC 160				IEC 180				IEC 200			
	A	LT	Z	ØD	A	LT	Z	ØD	A	LT	Z	ØD	A	LT	Z	ØD
35002	-				295	433	118	350	295	433	118	350	295	463	148	400
35003	-				452				452				-			
35004	490	340	100	300	490	379	139		-				-			

PLB	IEC ~ Kg							
	80	90	100	112	132	160	180	200
35002	-	-	-	-	-	309	309	319
35003	-	-	-	-	-	368	368	-
35004	308	308	309	309	313	323	-	-

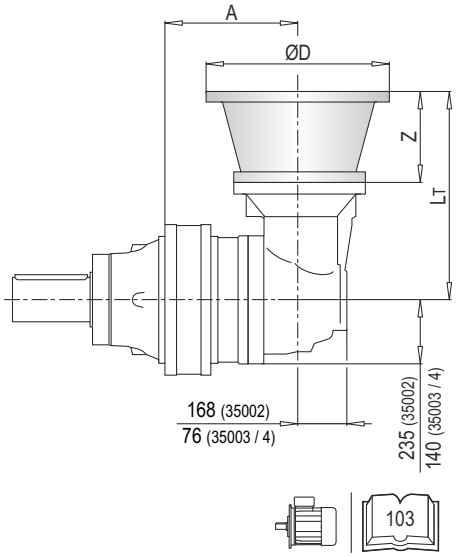

PLB 35000 MC - Giriş Milleri / Input Shafts / Antriebswellen / Alberi Entrata / Arbres D'entree / Ejes De Entrada

PLB	EL C 28					EL C 42					EML 42					EML 1"3/8 Z6					EM 65				
	A	LT	Z	L	Ød	A	LT	Z	L	Ød	A	LT	Z	L	Ød	A	LT	Z	L	Ød	A	LT	Z	L	Ød
35002	-					-					-					-					295	436.5	121.5	105	65
35003	-					-					-					-					452	361.5			
35004	490	304	64	50	28	490	304	64	82	42	490	334	94	82	42	490	334	94	106	1"3/8	490				

PLB	EM 1"3/8 Z6					EP 65				
	A	LT	Z	L	Ød	A	LT	Z	L	Ød
35002	295	436.5	121.5	105	1"3/8	295	468	153	105	65
35003	452	361.5				452	393			
35004	490					490				

PLB	~ Kg						
	EL C 28	EL C 42	EML 42	EML 1"3/8 Z6	EM 65	EM 1"3/8 Z6	EP 65
35002	-	-	-	-	304.0	304.0	313.0
35003	-	-	-	-	363.0	363.0	372.0
35004	306.5	307.0	310.0	310.0	318.0	318.0	327.0

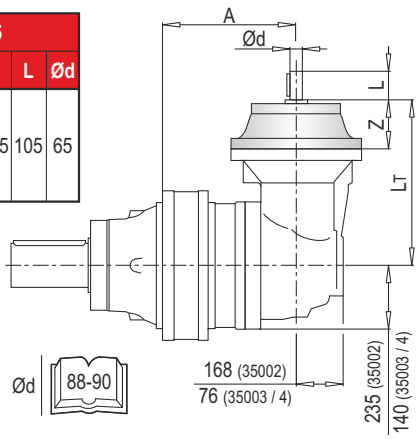

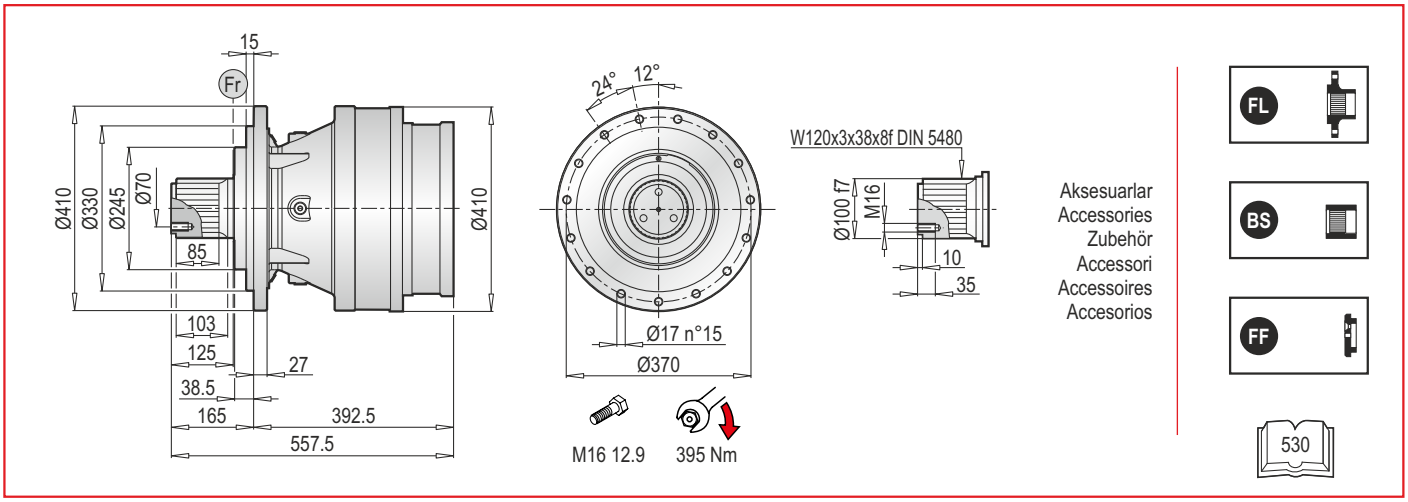

PL 35000 MSF - Elektrik Motor Adaptörleri (IEC) / Electrıc Motor Couplings (IEC) / Anbauvorrichtung Für Elektromotore (IEC) / Predisposizioni Per Motori Elettrici (IEC) / Adaptations Pour Moteurs Electriques (IEC) / Acoplamientos Para Motores Eléctricos (IEC)

PL	IEC 63			IEC 71			IEC 80			IEC 90			IEC 100			IEC 112		
	LT	Z	ØD	LT	Z	ØD	LT	Z	ØD	LT	Z	ØD	LT	Z	ØD	LT	Z	ØD
35001	-			-			-			-			-			-		
35002	-			-			-			-			-			-		
35003	587	36	140	587	36	160	607	56	200	607	56	200	617	66	250	617	66	250
35004	648			648			668			668			678			678		

PL	IEC 132			IEC 160			IEC 180			IEC 200			IEC 225			IEC 250		
	LT	Z	ØD	LT	Z	ØD	LT	Z	ØD	LT	Z	ØD	LT	Z	ØD	LT	Z	ØD
35001	-			540.5	148	350	540.5	148	350	540.5	148	400	531.5	139	450	539.5	147	550
35002	-			597.5	118		597.5	118		627.5			-			-		
35003	651	100	300	690	139		690	139		-			-			-		
35004	712			751			751			-			-			-		

PL	IEC ~ Kg											
	63	71	80	90	100	112	132	160	180	200	225	250
35001	-	-	-	-	-	-	-	262	262	267	273	285
35002	-	-	-	-	-	-	-	289	289	299	-	-
35003	288	288	290	290	291	291	295	305	305	-	-	-
35004	296	296	298	298	299	299	303	313	313	-	-	-

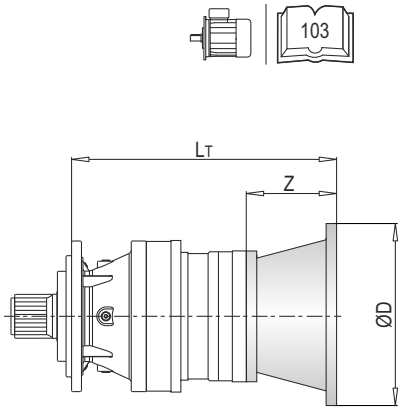

PL 35000 MSF - Giriş Milleri / Input Shafts / Antriebswellen / Alberi Entrata / Arbres D'entree / Ejes De Entrada

PL	EL C 28				EL C 42				EML 42				EML 1"3/8 Z6				EM 65				EM 1"3/8 Z6			
	LT	Z	L	Ød	LT	Z	L	Ød	LT	Z	L	Ød	LT	Z	L	Ød	LT	Z	L	Ød	LT	Z	L	Ød
35002	-				-				-				-				601	121.5	105	65	601	121.5	105	1"3/8
35003	615	64	50	28	615	64	82	42	645	94	82	42	645	94	106	1"3/8	686				686			
35004	676				676				706				706				-				-			

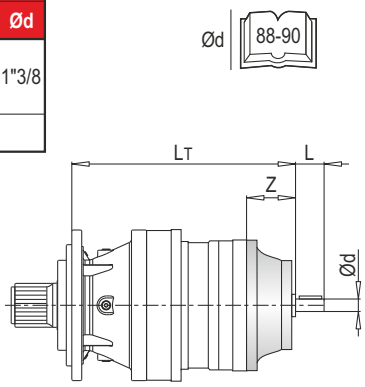

PL	EP 65				ET 90			
	LT	Z	L	Ød	LT	Z	L	Ød
35002	632.5	153	105	65	684.5	174	170	90
35003	717.5				-			
35004	-				-			

PL	~ Kg							
	EL C 28	EL C 42	EML 42	EML 1"3/8 Z6	EM 65	EM 1"3/8 Z6	EP 65	ET 90
35002	-	-	-	-	284	284	293	315
35003	288.5	289	292	292	300	300	309	-
35004	296.5	297	300	300	-	-	-	-

PL 35000 MSF - Sonsuz Dişlili Redüktör Adaptörleri (PMRV/PRV) / Worm Gearbox Adaptors (PMRV/PRV) / Anschluss Für Schneckengetriebe (PMRV/PRV) / Predisposizioni Per Riduttori A Vite Senza Fine (PMRV/PRV) / Adaptation Pour Reducteurs A Vis Sans Fin (PMRV/PRV) / Acoplamiento Para Reductores De Tornillo Sin Fin (PMRV/PRV)

PL	PMRV/PRV 050					PMRV/PRV 063					PMRV/PRV 075				
	LM	l	h	MA	G	LM	l	h	MA	G	LM	l	h	MA	G
35002	-					-					-				
35003	676.5	50	110	60	80	686	63	135	72	95	665	75	161	86	112.5
35004	737.5					747					726				

PL	PMRV/PRV 090					PMRV/PRV 110					PMRV/PRV 130				
	LM	l	h	MA	G	LM	l	h	MA	G	LM	l	h	MA	G
35002	-					617.5	110	237.5	127.5	160	625	130	277.5	147.5	180
35003	675	90	193	103	129.5	702.5					710				
35004	736					-					-				

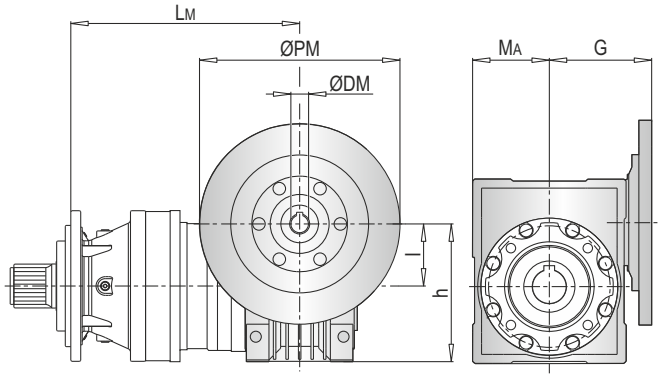

PL	PMRV/PRV 150				
	LM	l	h	MA	G
35002	639.5	150	320	170	210
35003	724.5				
35004	-				

PL	PMRV/PRV ~ Kg						
	050	063	075	090	110	130	150
35002	-	-	-	-	313	330	366
35003	291	294.5	297	302	329	346	382
35004	299	306.5	304	309	-	-	-

ØPM
ØDM
105

PLB 35000 MSF - Elektrik Motor Adaptörleri (IEC) / Electric Motor Couplings (IEC) / Anbauvorrichtung Für Elektromotore (IEC) / Predisposizioni Per Motori Elettrici (IEC) / Adaptations Pour Moteurs Electriques (IEC) / Acoplamientos Para Motores Eléctricos (IEC)

PLB	IEC 80				IEC 90				IEC 100				IEC 112			
	A	LT	Z	ØD	A	LT	Z	ØD	A	LT	Z	ØD	A	LT	Z	ØD
35002	-				-				-				-			
35003	-				-				-				-			
35004	652.5	296	56	200	652.5	296	56	200	652.5	306	66	250	652.5	306	66	250

PLB	IEC 132				IEC 160				IEC 180				IEC 200			
	A	LT	Z	ØD	A	LT	Z	ØD	A	LT	Z	ØD	A	LT	Z	ØD
35002	-				457.5	433	118	350	457.5	433	118	350	457.5	463	148	400
35003	-				614.5				614.5				-			
35004	652.5	340	100	300	652.5	379	139		-				-			

PLB	IEC ~ Kg							
	80	90	100	112	132	160	180	200
35002	-	-	-	-	-	331	331	341
35003	-	-	-	-	-	390	390	-
35004	330	330	331	331	335	345	-	-

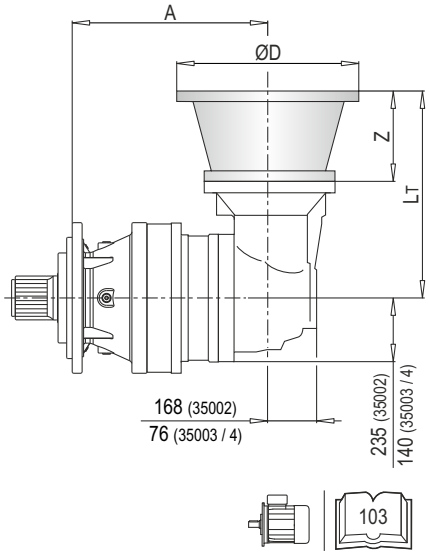

PLB 35000 MSF - Giriş Milleri / Input Shafts / Antriebswellen / Alberi Entrata / Arbres D'entree / Ejes De Entrada

PLB	EL C 28					EL C 42					EML 42					EML 1"3/8 Z6					EM 65				
	A	LT	Z	L	Ød	A	LT	Z	L	Ød	A	LT	Z	L	Ød	A	LT	Z	L	Ød	A	LT	Z	L	Ød
35002	-					-					-					-					457.5	436.5	121.5	105	65
35003	-					-					-					-					614.5				
35004	652.5	304	64	50	28	652.5	304	64	82	42	652.5	334	94	82	42	652.5	334	94	106	1"3/8	652.5	377.5			

PLB	EM 1"3/8 Z6					EP 65				
	A	LT	Z	L	Ød	A	LT	Z	L	Ød
35002	457.5	436.5	121.5	105	1"3/8	457.5	468	153	105	65
35003	614.5					614.5	409			
35004	652.5	377.5				652.5				

PLB	~ Kg						
	EL C 28	EL C 42	EML 42	EML 1"3/8 Z6	EM 65	EM 1"3/8 Z6	EP 65
35002	-	-	-	-	326	326	335
35003	-	-	-	-	385	385	394
35004	328.5	329	332	332	340	340	349

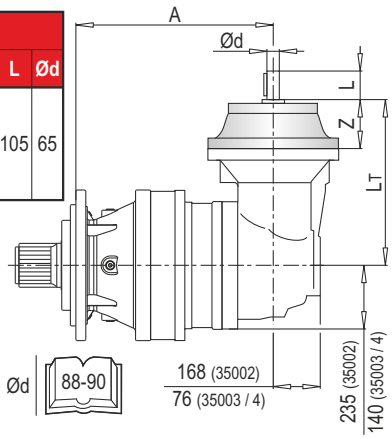

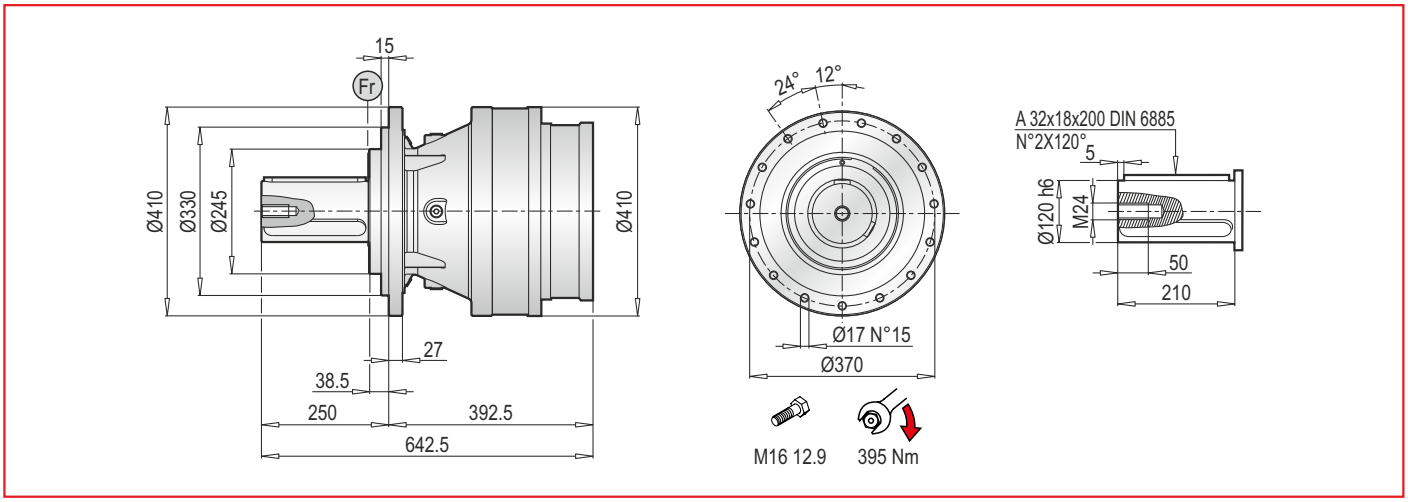

PL 35000 MCF - Elektrik Motor Adaptörleri (IEC) / Electrıc Motor Couplings (IEC) / Anbauvorrichtung Für Elektromotore (IEC) / Predisposizioni Per Motori Elettrici (IEC) / Adaptations Pour Moteurs Electriques (IEC) / Acoplamientos Para Motores Eléctricos (IEC)

PL	IEC 63			IEC 71			IEC 80			IEC 90			IEC 100			IEC 112		
	LT	Z	ØD	LT	Z	ØD	LT	Z	ØD	LT	Z	ØD	LT	Z	ØD	LT	Z	ØD
35001	-			-			-			-			-			-		
35002	-			-			-			-			-			-		
35003	587	36	140	587	36	160	607	56	200	607	56	200	617	66	250	617	66	250
35004	648			648			668			668			678			678		

PL	IEC 132			IEC 160			IEC 180			IEC 200			IEC 225			IEC 250		
	LT	Z	ØD	LT	Z	ØD	LT	Z	ØD	LT	Z	ØD	LT	Z	ØD	LT	Z	ØD
35001	-			540.5	148	350	540.5	148	350	540.5	148	400	531.5	139	450	539.5	147	550
35002	-			597.5	118		597.5	118		627.5			-			-		
35003	651	100	300	690	139		690	139		-			-			-		
35004	712			751			751			-			-			-		

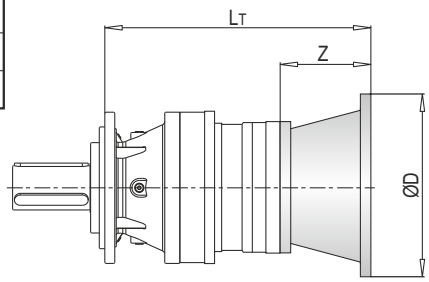

PL	IEC ~ Kg											
	63	71	80	90	100	112	132	160	180	200	225	250
35001	-	-	-	-	-	-	-	262	262	267	273	285
35002	-	-	-	-	-	-	-	289	289	299	-	-
35003	288	288	290	290	291	291	295	305	305	-	-	-
35004	296	296	298	298	299	299	303	313	313	-	-	-

PL 35000 MCF - Giriş Milleri / Input Shafts / Antriebswellen / Alberi Entrata / Arbres D'entree / Ejes De Entrada

PL	EL C 28				EL C 42				EML 42				EML 1"3/8 Z6				EM 65				EM 1"3/8 Z6			
	LT	Z	L	Ød	LT	Z	L	Ød	LT	Z	L	Ød	LT	Z	L	Ød	LT	Z	L	Ød	LT	Z	L	Ød
35002	-				-				-				-				601	121.5	105	65	601	121.5	105	1"3/8
35003	615	64	50	28	615	64	82	42	645	94	82	42	645	94	106	1"3/8	686				686			
35004	676				676				706				706				-				-			

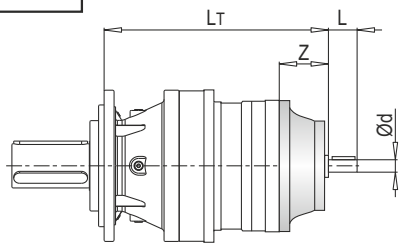

PL	EP 65				ET 90			
	LT	Z	L	Ød	LT	Z	L	Ød
35002	632.5	153	105	65	684.5	174	170	90
35003	717.5				-			
35004	-				-			

PL	~ Kg							
	EL C 28	EL C 42	EML 42	EML 1"3/8 Z6	EM 65	EM 1"3/8 Z6	EP 65	ET 90
35002	-	-	-	-	284	284	293	315
35003	288.5	289	292	292	300	300	309	-
35004	296.5	297	300	300	-	-	-	-

PL 35000 MCF - Sonsuz Dişlili Redüktör Adaptörleri (PMRV/PRV) / Worm Gearbox Adaptors (PMRV/PRV) / Anschluss Für Schneckengetriebe (PMRV/PRV) / Predisposizioni Per Riduttori A Vite Senza Fine (PMRV/PRV) / Adaptation Pour Reducteurs A Vis Sans Fin (PMRV/PRV) / Acoplamiento Para Reductores De Tornillo Sin Fin (PMRV/PRV)

PL	PMRV/PRV 050					PMRV/PRV 063					PMRV/PRV 075				
	LM	l	h	MA	G	LM	l	h	MA	G	LM	l	h	MA	G
35002	-					-					-				
35003	676.5	50	110	60	80	686	63	135	72	95	665	75	161	86	112.5
35004	737.5					747					726				

PL	PMRV/PRV 090					PMRV/PRV 110					PMRV/PRV 130				
	LM	l	h	MA	G	LM	l	h	MA	G	LM	l	h	MA	G
35002	-					617.5	110	237.5	127.5	160	625	130	277.5	147.5	180
35003	675	90	193	103	129.5	702.5					710				
35004	736					-					-				

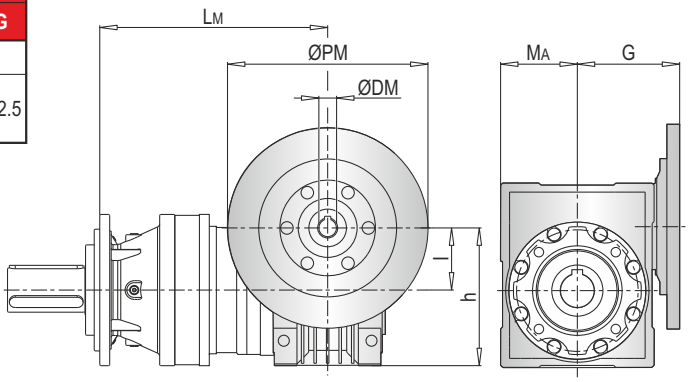

PL	PMRV/PRV 150				
	LM	l	h	MA	G
35002	639.5	150	320	170	210
35003	724.5				
35004	-				

PL	PMRV/PRV ~ Kg						
	050	063	075	090	110	130	150
35002	-	-	-	-	313	330	366
35003	291	294.5	297	302	329	346	382
35004	299	306.5	304	309	-	-	-

ØPM
ØDM
105

PLB 35000 MCF - Elektrik Motor Adaptörleri (IEC) / Electric Motor Couplings (IEC) / Anbauvorrichtung Für Elektromotore (IEC) / Predisposizioni Per Motori Elettrici (IEC) / Adaptations Pour Moteurs Electriques (IEC) / Acoplamientos Para Motores Eléctricos (IEC)

PLB	IEC 80				IEC 90				IEC 100				IEC 112			
	A	LT	Z	ØD	A	LT	Z	ØD	A	LT	Z	ØD	A	LT	Z	ØD
35002	-				-				-				-			
35003	-				-				-				-			
35004	652.5	296	56	200	652.5	296	56	200	652.5	306	66	250	652.5	306	66	250

PLB	IEC 132				IEC 160				IEC 180				IEC 200			
	A	LT	Z	ØD	A	LT	Z	ØD	A	LT	Z	ØD	A	LT	Z	ØD
35002	-				457.5	433	118	350	457.5	433	118	350	457.5	463	148	400
35003	-				614.5				614.5				-			
35004	652.5	340	100	300	652.5	379	139		-				-			

PLB	IEC ~ Kg							
	80	90	100	112	132	160	180	200
35002	-	-	-	-	-	331	331	341
35003	-	-	-	-	-	390	390	-
35004	330	330	331	331	335	345	-	-

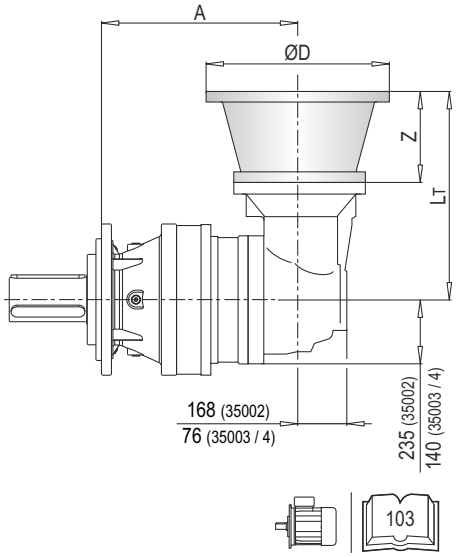

PLB 35000 MCF - Giriş Milleri / Input Shafts / Antriebswellen / Alberi Entrata / Arbres D'entree / Ejes De Entrada

PLB	EL C 28					EL C 42					EML 42					EML 1"3/8 Z6					EM 65				
	A	LT	Z	L	Ød	A	LT	Z	L	Ød	A	LT	Z	L	Ød	A	LT	Z	L	Ød	A	LT	Z	L	Ød
35002	-					-					-					-					457.5	436.5	121.5	105	65
35003	-					-					-					-					614.5				
35004	652.5	304	64	50	28	652.5	304	64	82	42	652.5	334	94	82	42	652.5	334	94	106	1"3/8	652.5	377.5			

PLB	EM 1"3/8 Z6					EP 65				
	A	LT	Z	L	Ød	A	LT	Z	L	Ød
35002	457.5	436.5	121.5	105	1"3/8	457.5	468	153	105	65
35003	614.5					614.5	409			
35004	652.5	377.5				652.5				

PLB	~ Kg						
	EL C 28	EL C 42	EML 42	EML 1"3/8 Z6	EM 65	EM 1"3/8 Z6	EP 65
35002	-	-	-	-	326	326	335
35003	-	-	-	-	385	385	394
35004	328.5	329	332	332	340	340	349

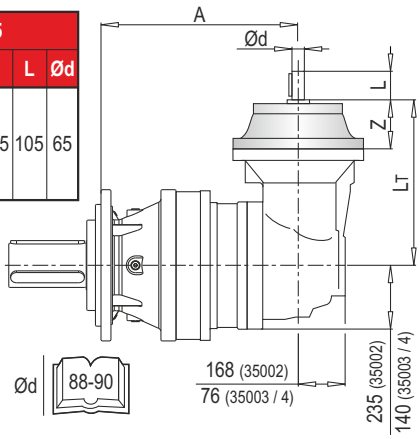

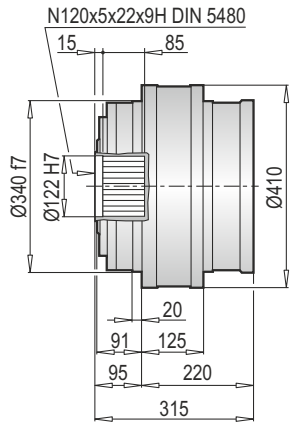

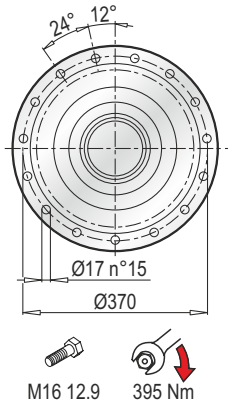

Aksesuarlar
Accessories
Zubehör
Accessori
Accessoires
Accesorios

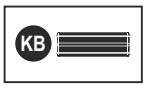

PL 35000 F - Elektrik Motor Adaptörleri (IEC) / Electrıc Motor Couplings (IEC) / Anbauvorrichtung Für Elektromotore (IEC) / Predisposizioni Per Motori Elettrici (IEC) / Adaptations Pour Moteurs Electriques (IEC) / Acoplamientos Para Motores Eléctricos (IEC)

PL	IEC 63			IEC 71			IEC 80			IEC 90			IEC 100			IEC 112		
	LT	Z	ØD	LT	Z	ØD	LT	Z	ØD	LT	Z	ØD	LT	Z	ØD	LT	Z	ØD
35001	-			-			-			-			-			-		
35002	-			-			-			-			-			-		
35003	414.5	36	140	414.5	36	160	434.5	56	200	434.5	56	200	444.5	66	250	444.5	66	250
35004	475.5			475.5			495.5			495.5			505.5			505.5		

PL	IEC 132			IEC 160			IEC 180			IEC 200			IEC 225			IEC 250		
	LT	Z	ØD	LT	Z	ØD	LT	Z	ØD	LT	Z	ØD	LT	Z	ØD	LT	Z	ØD
35001	-			370	150	350	370	150	350	370	150	400	359	139	450	359	139	550
35002	-			425	118		425	118		455	148		-			-		
35003	478.5	100	300	517.5	139		517.5	139		-			-			-		
35004	539.5			578.5			583.5			-			-			-		

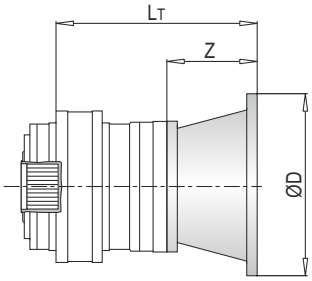

PL	IEC ~ Kg											
	63	71	80	90	100	112	132	160	180	200	225	250
35001	-	-	-	-	-	-	-	204	204	209	215	227
35002	-	-	-	-	-	-	-	231	231	241	-	-
35003	230	230	232	232	233	233	237	247	247	-	-	-
35004	238	238	240	240	241	241	245	255	255	-	-	-

PL 35000 F - Giriş Milleri / Input Shafts / Antriebswellen / Alberi Entrata / Arbres D'entree / Ejes De Entrada

PL	EL C 28				EL C 42				EML 42				EML 1"3/8 Z6				EM 65				EM 1"3/8 Z6			
	LT	Z	L	Ød	LT	Z	L	Ød	LT	Z	L	Ød	LT	Z	L	Ød	LT	Z	L	Ød	LT	Z	L	Ød
35002	-				-				-				-				428.5	121.5	105	65	428.5	121.5	105	1"3/8
35003	442.5	64	50	28	442.5	64	82	42	472.5	94	82	42	472.5	94	106	1"3/8	500				500			
35004	503.5				503.5				533.5				533.5				-				-			

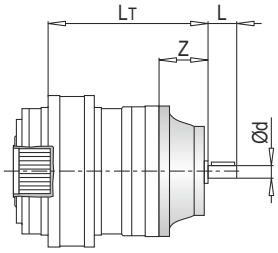

PL	EP 65				ET 90			
	LT	Z	L	Ød	LT	Z	L	Ød
35002	460	153	105	65	478.5	171.5	170	90
35003	531.5				-			
35004	-				-			

PL	~ Kg							
	EL C 28	EL C 42	EML 42	EML 1"3/8 Z6	EM 65	EM 1"3/8 Z6	EP 65	ET 90
35002	-	-	-	-	226.0	226.0	235.0	257.0
35003	230.5	231.0	234.0	234.0	242.0	242.0	251.0	-
35004	238.5	239.0	242.0	242.0	-	-	-	-

PL 35000 F - Sonsuz Dişlili Redüktör Adaptörleri (PMRV/PRV) / Worm Gearbox Adaptors (PMRV/PRV) / Anschluss Für Schneckengetriebe (PMRV/PRV) / Predisposizioni Per Riduttori A Vite Senza Fine (PMRV/PRV) / Adaptation Pour Reducteurs A Vis Sans Fin (PMRV/PRV) / Acoplamiento Para Reductores De Tornillo Sin Fin (PMRV/PRV)

PL	PMRV/PRV 050					PMRV/PRV 063					PMRV/PRV 075				
	LM	l	h	MA	G	LM	l	h	MA	G	LM	l	h	MA	G
35002	-					-					-				
35003	500	50	110	60	80	509.5	63	135	72	95	488.5	75	161	86	112.5
35004	561					570.5					549.5				

PL	PMRV/PRV 090					PMRV/PRV 110					PMRV/PRV 130				
	LM	l	h	MA	G	LM	l	h	MA	G	LM	l	h	MA	G
35002	-					441	110	237.5	127.5	160	446.5	130	277.5	147.5	180
35003	498.5	90	193	103	129.5	512.5					518				
35004	559.5					-					-				

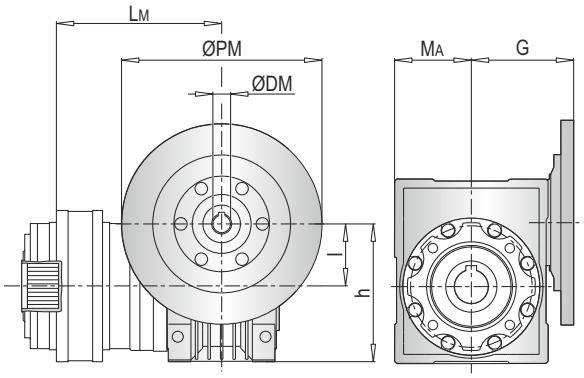

PL	PMRV/PRV 150				
	LM	l	h	MA	G
35002	463	150	320	170	210
35003	534.5				
35004	-				

PL	PMRV/PRV ~ Kg						
	050	063	075	090	110	130	150
35002	-	-	-	-	255	272	308
35003	233	236.5	239	244	271	288	324
35004	241	244.5	247	252	-	-	-

PLB 35000 F - Elektrik Motor Adaptörleri (IEC) / Electric Motor Couplings (IEC) / Anbauvorrichtung Für Elektromotore (IEC) / Predisposizioni Per Motori Elettrici (IEC) / Adaptations Pour Moteurs Electriques (IEC) / Acoplamientos Para Motores Eléctricos (IEC)

PLB	IEC 80				IEC 90				IEC 100				IEC 112			
	A	LT	Z	ØD	A	LT	Z	ØD	A	LT	Z	ØD	A	LT	Z	ØD
35002	-				-				-				-			
35003	-				-				-				-			
35004	480	296	56	200	480	296	56	200	480	306	66	250	480	306	66	250

PLB	IEC 132				IEC 160				IEC 180				IEC 200			
	A	LT	Z	ØD	A	LT	Z	ØD	A	LT	Z	ØD	A	LT	Z	ØD
35002	-				285	433	118	350	285	433	118	350	285	463	148	400
35003	-				442				442				-			
35004	480	340	100	300	480	379	139		-				-			

PLB	IEC ~ Kg							
	80	90	100	112	132	160	180	200
35002	-	-	-	-	-	272	272	282
35003	-	-	-	-	-	331	331	-
35004	272	272	273	273	277	287	-	-

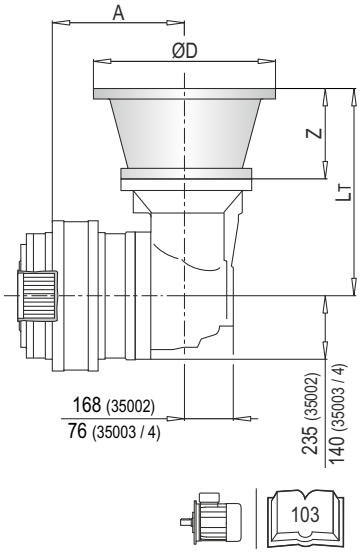

PLB 35000 F - Giriş Milleri / Input Shafts / Antriebswellen / Alberi Entrata / Arbres D'entree / Ejes De Entrada

PLB	EL C 28					EL C 42					EML 42					EML 1"3/8 Z6					EM 65				
	A	LT	Z	L	Ød	A	LT	Z	L	Ød	A	LT	Z	L	Ød	A	LT	Z	L	Ød	A	LT	Z	L	Ød
35002	-					-					-					-					307	436.5	121.5	105	65
35003	-					-					-					-					378.5	361.5			
35004	439.5	304	64	50	28	439.5	304	64	50	42	439.5	334	94	82	42	439.5	334	94	106	1"3/8	439.5				

PLB	EM 1"3/8 Z6					EP 65				
	A	LT	Z	L	Ød	A	LT	Z	L	Ød
35002	307	436.5	121.5	105	1"3/8	307	468	153	105	65
35003	378.5	361.5				378.5	393			
35004	439.5					439.5				

PLB	~ Kg						
	EL C 28	EL C 42	EML 42	EML 1"3/8 Z6	EM 65	EM 1"3/8 Z6	EP 65
35002	-	-	-	-	267.0	267.0	276.0
35003	-	-	-	-	326.0	326.0	335.0
35004	270.5	271.0	274.0	274.0	282.0	282.0	291.0

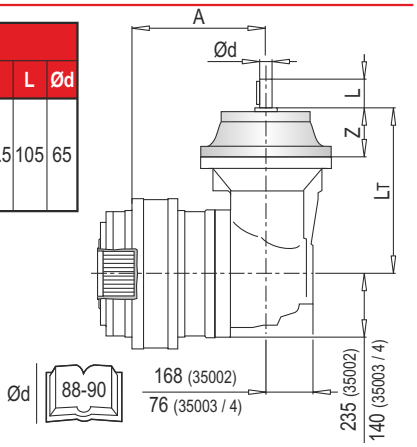

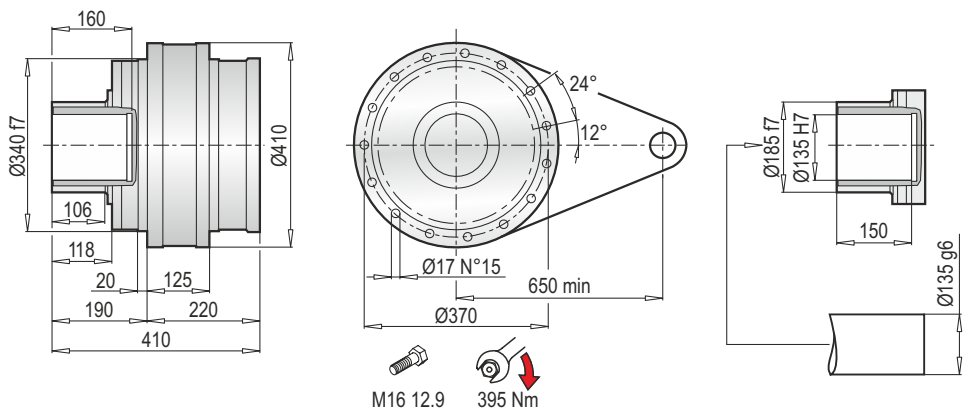

Aksesuarlar
Accessories
Zubehör
Accessori
Accessoires
Accesorios

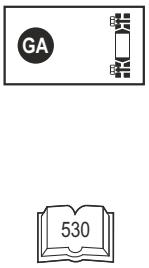

PL 35000 FS - Elektrik Motor Adaptörleri (IEC) / Electric Motor Couplings (IEC) /Anbauvorrichtung Für Elektromotore (IEC) / Predisposizioni Per Motori Elettrici (IEC) / Adaptations Pour Moteurs Electriques (IEC) /Acoplamientos Para Motores Eléctricos (IEC)

PL	IEC 63			IEC 71			IEC 80			IEC 90			IEC 100			IEC 112		
	LT	Z	ØD	LT	Z	ØD	LT	Z	ØD	LT	Z	ØD	LT	Z	ØD	LT	Z	ØD
35001	-			-			-			-			-			-		
35002	-			-			-			-			-			-		
35003	414.5	36	140	414.5	36	160	434.5	56	200	434.5	56	200	444.5	66	250	444.5	66	250
35004	475.5			475.5			495.5			495.5			505.5			505.5		

PL	IEC 132			IEC 160			IEC 180			IEC 200			IEC 225			IEC 250		
	LT	Z	ØD	LT	Z	ØD	LT	Z	ØD	LT	Z	ØD	LT	Z	ØD	LT	Z	ØD
35001	-			370	150	350	370	150	350	370	150	400	359	139	450	359	139	550
35002	-			425	118		425	118		455	148		-			-		
35003	478.5	100	300	517.5	139		517.5	139		-			-			-		
35004	539.5			578.5			583.5			-			-			-		

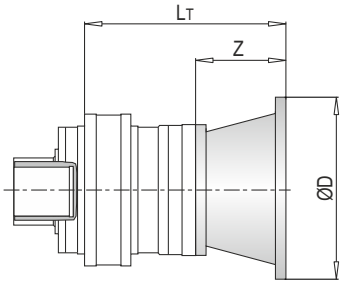

PL	IEC ~ Kg											
	63	71	80	90	100	112	132	160	180	200	225	250
35001	-	-	-	-	-	-	-	212	212	217	223	235
35002	-	-	-	-	-	-	-	239	239	249	-	-
35003	238	238	240	240	241	241	245	255	255	-	-	-
35004	246	246	248	248	249	249	253	263	263	-	-	-

PL 35000 FS - Giriş Milleri / Input Shafts / Antriebswellen / Alberi Entrata / Arbres D'entree / Ejes De Entrada

PL	EL C 28				EL C 42				EML 42				EML 1"3/8 Z6				EM 65				EM 1"3/8 Z6			
	LT	Z	L	Ød	LT	Z	L	Ød	LT	Z	L	Ød	LT	Z	L	Ød	LT	Z	L	Ød	LT	Z	L	Ød
35002	-				-				-				-				428.5	121.5	105	65	428.5	121.5	105	1"3/8
35003	442.5	64	50	28	442.5	64	82	42	472.5	94	82	42	472.5	94	106	1"3/8	500				500			
35004	503.5				503.5				533.5				533.5				-				-			

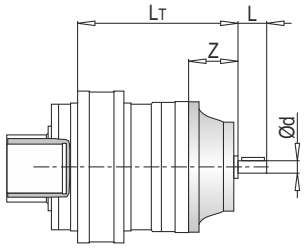

PL	EP 65				ET 90			
	LT	Z	L	Ød	LT	Z	L	Ød
35002	460	153	105	65	478.5	171.5	170	90
35003	531.5				-			
35004	-				-			

PL	~ Kg							
	EL C 28	EL C 42	EML 42	EML 1"3/8 Z6	EM 65	EM 1"3/8 Z6	EP 65	ET 90
35002	-	-	-	-	234.0	234.0	243.0	265.0
35003	238.5	239.0	242.0	242.0	250.0	250.0	259.0	-
35004	246.5	247.0	250.0	250.0	-	-	-	-

PL 35000 FS - Sonsuz Dişlili Redüktör Adaptörleri (PMRV/PRV) / Worm Gearbox Adaptors (PMRV/PRV) / Anschluss Für Schneckengetriebe (PMRV/PRV) / Predisposizioni Per Riduttori A Vite Senza Fine (PMRV/PRV) / Adaptation Pour Reducteurs A Vis Sans Fin (PMRV/PRV) / Acoplamiento Para Reductores De Tornillo Sin Fin (PMRV/PRV)

PL	PMRV/PRV 050					PMRV/PRV 063					PMRV/PRV 075				
	LM	l	h	MA	G	LM	l	h	MA	G	LM	l	h	MA	G
35002	-					-					-				
35003	500	50	110	60	80	509.5	63	135	72	95	488.5	75	161	86	112.5
35004	561					570.5					549.5				

PL	PMRV/PRV 090					PMRV/PRV 110					PMRV/PRV 130				
	LM	l	h	MA	G	LM	l	h	MA	G	LM	l	h	MA	G
35002	-					441	110	237.5	127.5	160	446.5	130	277.5	147.5	180
35003	498.5	90	193	103	129.5	512.5					518				
35004	559.5					-					-				

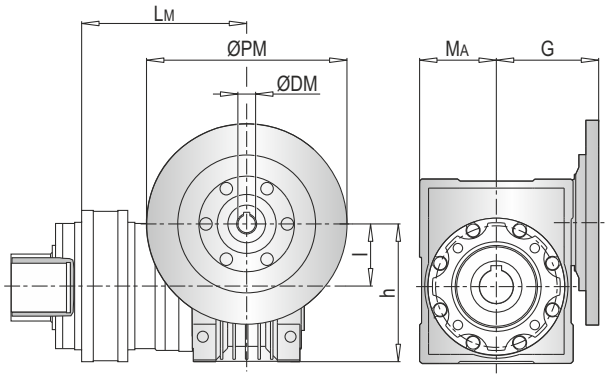

PL	PMRV/PRV 150				
	LM	l	h	MA	G
35002	463	150	320	170	210
35003	534.5				
35004	-				

PL	PMRV/PRV ~ Kg						
	050	063	075	090	110	130	150
35002	-	-	-	-	263	280	316
35003	241	244.5	247	252	279	296	332
35004	249	252.5	255	260	-	-	-

PLB 35000 FS - Elektrik Motor Adaptörleri (IEC) / Electric Motor Couplings (IEC) / Anbauvorrichtung Für Elektromotore (IEC) / Predisposizioni Per Motori Elettrici (IEC) / Adaptations Pour Moteurs Electriques (IEC) / Acoplamientos Para Motores Eléctricos (IEC)

PLB	IEC 80				IEC 90				IEC 100				IEC 112			
	A	LT	Z	ØD	A	LT	Z	ØD	A	LT	Z	ØD	A	LT	Z	ØD
35002	-				-				-				-			
35003	-				-				-				-			
35004	480	296	56	200	480	296	56	200	480	306	66	250	480	306	66	250

PLB	IEC 132				IEC 160				IEC 180				IEC 200			
	A	LT	Z	ØD	A	LT	Z	ØD	A	LT	Z	ØD	A	LT	Z	ØD
35002	-				285	433	118	350	285	433	118	350	285	463	148	400
35003	-				442				442				-			
35004	480	340	100	300	480	379	139		-				-			

PLB	IEC ~ Kg							
	80	90	100	112	132	160	180	200
35002	-	-	-	-	-	280	280	290
35003	-	-	-	-	-	339	339	-
35004	280	280	281	281	285	295	-	-

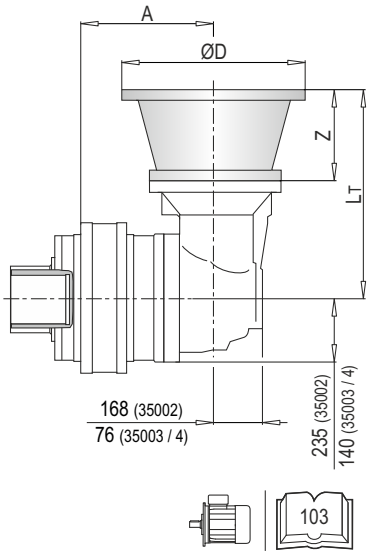

PLB 35000 FS - Giriş Milleri / Input Shafts / Antriebswellen / Alberi Entrata / Arbres D'entree / Ejes De Entrada

PLB	EL C 28					EL C 42					EML 42					EML 1"3/8 Z6					EM 65				
	A	LT	Z	L	Ød	A	LT	Z	L	Ød	A	LT	Z	L	Ød	A	LT	Z	L	Ød	A	LT	Z	L	Ød
35002	-					-					-					-					307	436.5	121.5	105	65
35003	-					-					-					-					378.5	361.5			
35004	439.5	304	64	50	28	439.5	304	64	82	42	439.5	334	94	82	42	439.5	334	94	82	1"3/8	439.5				

PLB	EM 1"3/8 Z6					EP 65				
	A	LT	Z	L	Ød	A	LT	Z	L	Ød
35002	307	436.5	121.5	105	1"3/8	307	468	153	105	65
35003	378.5	361.5				378.5	393			
35004	439.5					439.5				

PLB	~ Kg						
	EL C 28	EL C 42	EML 42	EML 1"3/8 Z6	EM 65	EM 1"3/8 Z6	EP 65
35002	-	-	-	-	275.0	275.0	284.0
35003	-	-	-	-	334.0	334.0	343.0
35004	278.5	279.0	282.0	282.0	290.0	290.0	299.0

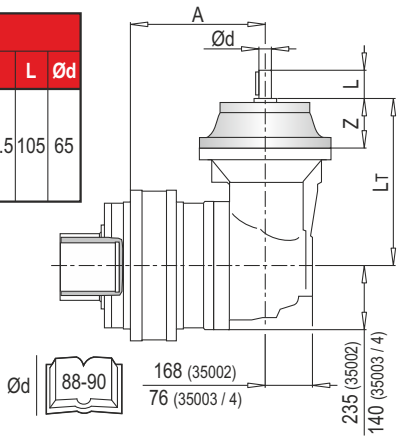

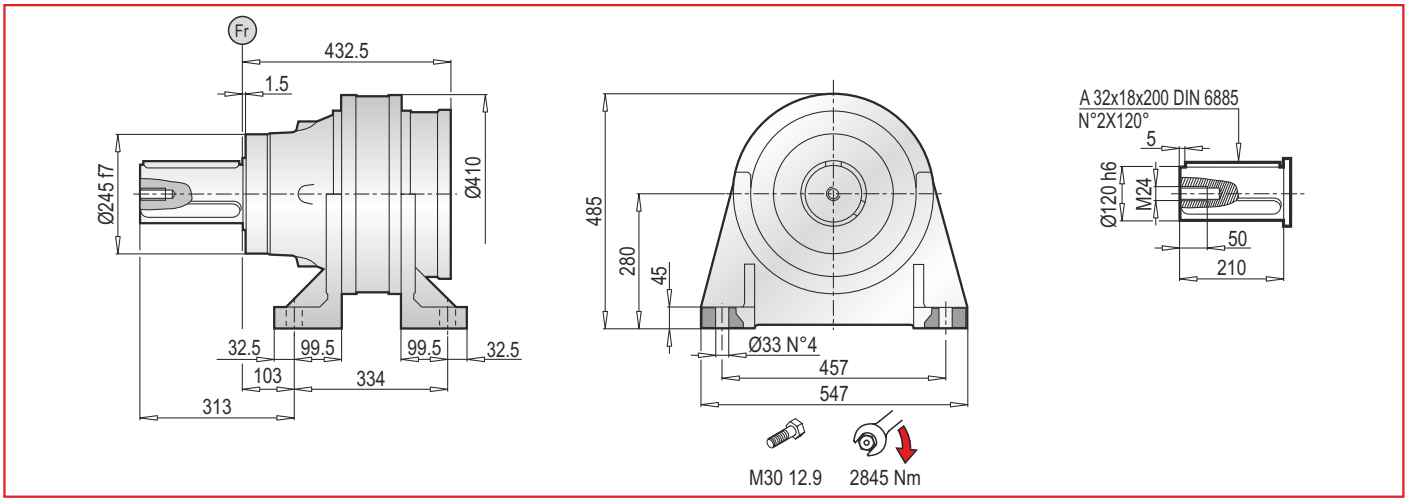

PL 35000 CPC - Elektrik Motor Adaptörleri (IEC) / Electrıc Motor Couplings (IEC) / Anbauvorrichtung Für Elektromotore (IEC) / Predisposizioni Per Motori Elettrici (IEC) / Adaptations Pour Moteurs Electriques (IEC) / Acoplamientos Para Motores Eléctricos (IEC)

PL	IEC 63			IEC 71			IEC 80			IEC 90			IEC 100			IEC 112		
	LT	Z	ØD	LT	Z	ØD	LT	Z	ØD	LT	Z	ØD	LT	Z	ØD	LT	Z	ØD
35001	-			-			-			-			-			-		
35002	-			-			-			-			-			-		
35003	627	36	140	627	36	160	647	56	200	647	56	200	657	66	250	657	66	250
35004	688			688			708			708			718			718		

PL	IEC 132			IEC 160			IEC 180			IEC 200			IEC 225			IEC 250		
	LT	Z	ØD	LT	Z	ØD	LT	Z	ØD	LT	Z	ØD	LT	Z	ØD	LT	Z	ØD
35001	-			582.5	150	350	582.5	150	350	582.5	150	400	571.5	139	450	571.5	139	550
35002	-			637.5	118		637.5	118		667.5	148		-			-		
35003	691	100	300	730	139		730	139		-			-			-		
35004	752			791			791			-			-			-		

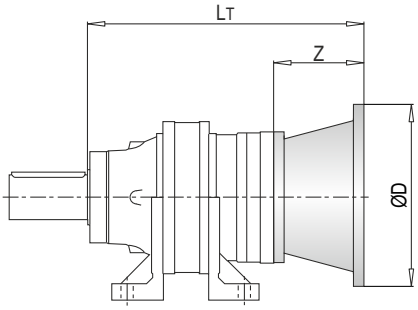

PL	IEC ~ Kg											
	63	71	80	90	100	112	132	160	180	200	225	250
35001	-	-	-	-	-	-	-	301	301	306	293	324
35002	-	-	-	-	-	-	-	330	330	340	-	-
35003	329	329	331	331	332	332	336	346	346	-	-	-
35004	337	337	339	339	340	340	344	354	354	-	-	-

PL 35000 CPC - Giriş Milleri / Input Shafts / Antriebswellen / Alberi Entrata / Arbres D'entree / Ejes De Entrada

PL	EL C 28				EL C 42				EML 42				EML 1"3/8 Z6				EM 65				EM 1"3/8 Z6			
	LT	Z	L	Ød	LT	Z	L	Ød	LT	Z	L	Ød	LT	Z	L	Ød	LT	Z	L	Ød	LT	Z	L	Ød
35002	-				-				-				-				641	121.5	105	65	641	121.5	105	1"3/8
35003	655	64	50	28	655	64	82	42	685	94	82	42	685	94	106	1"3/8	712.5				712.5			
35004	716				716				746				746				-				-			

PL	EP 65				ET 90			
	LT	Z	L	Ød	LT	Z	L	Ød
35002	672.5	153	105	65	691	171.5	170	90
35003	744				-			
35004	-				-			

PL	~ Kg							
	EL C 28	EL C 42	EML 42	EML 1"3/8 Z6	EM 65	EM 1"3/8 Z6	EP 65	ET 90
35002	-	-	-	-	325.0	325.0	334.0	304.0
35003	329.5	330.0	333.0	333.0	341.0	341.0	350.0	-
35004	337.5	338.0	341.0	341.0	-	-	-	-

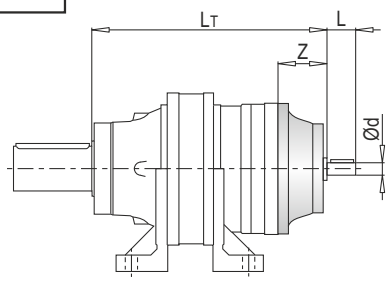

PL 35000 CPC - Sonsuz Dişlili Redüktör Adaptörleri (PMRV/PRV) / Worm Gearbox Adaptors (PMRV/PRV) / Anschluss Für Schneckengetriebe (PMRV/PRV) / Predisposizioni Per Riduttori A Vite Senza Fine (PMRV/PRV) / Adaptation Pour Reducteurs A Vis Sans Fin (PMRV/PRV) / Acoplamiento Para Reductores De Tornillo Sin Fin (PMRV/PRV)

PL	PMRV/PRV 050					PMRV/PRV 063					PMRV/PRV 075				
	LM	l	h	MA	G	LM	l	h	MA	G	LM	l	h	MA	G
35002	-					-					-				
35003	712.5	50	110	60	80	722	63	135	72	95	701	75	161	86	112.5
35004	773.5					783					762				

PL	PMRV/PRV 090					PMRV/PRV 110					PMRV/PRV 130				
	LM	l	h	MA	G	LM	l	h	MA	G	LM	l	h	MA	G
35002	-					653.5	110	237.5	127.5	160	659	130	277.5	147.5	180
35003	711	90	193	103	129.5	725					730.5				
35004	772					-					-				

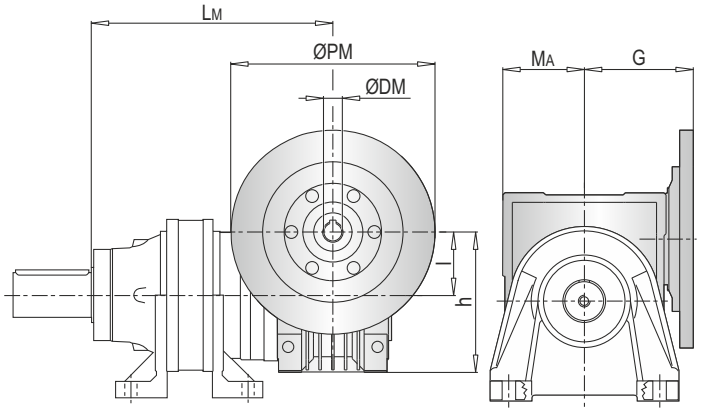

PL	PMRV/PRV 150				
	LM	l	h	MA	G
35002	675.5	150	320	170	210
35003	747				
35004	-				

PL	PMRV/PRV ~ Kg						
	050	063	075	090	110	130	150
35002	-	-	-	-	354	371	407
35003	332	335.5	338	343	370	387	423
35004	340	363.5	346	351	-	-	-

ØPM
ØDM
105

PLB 35000 CPC - Elektrik Motor Adaptörleri (IEC) / Electric Motor Couplings (IEC) / Anbauvorrichtung Für Elektromotore (IEC) / Predisposizioni Per Motori Elettrici (IEC) / Adaptations Pour Moteurs Electriques (IEC) / Acoplamientos Para Motores Eléctricos (IEC)

PLB	IEC 80				IEC 90				IEC 100				IEC 112			
	A	LT	Z	ØD	A	LT	Z	ØD	A	LT	Z	ØD	A	LT	Z	ØD
35002	-				-				-				-			
35003	-				-				-				-			
35004	692.5	296	56	200	692.5	296	56	200	692.5	306	66	250	692.5	306	66	250

PLB	IEC 132				IEC 160				IEC 180				IEC 200			
	A	LT	Z	ØD	A	LT	Z	ØD	A	LT	Z	ØD	A	LT	Z	ØD
35002	-				497.5	433	118	350	497.5	433	118	350	497.5	463	148	400
35003	-				654.5				654.5				-			
35004	692.5	340	100	300	692.5	379	139		-				-			

PLB	IEC ~ Kg							
	80	90	100	112	132	160	180	200
35002	-	-	-	-	-	372	372	400
35003	-	-	-	-	-	429	429	-
35004	371	371	372	372	376	295	-	-

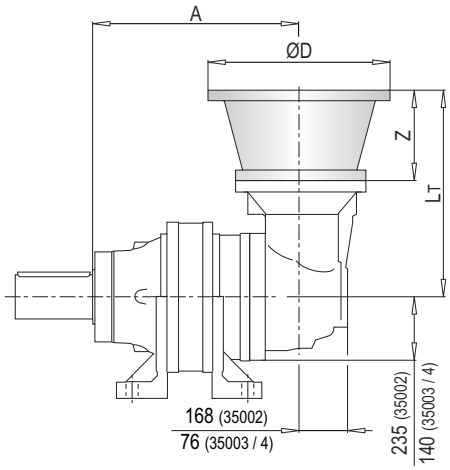

103

PLB 35000 CPC - Giriş Milleri / Input Shafts / Antriebswellen / Alberi Entrata / Arbres D'entree / Ejes De Entrada

PLB	EL C 28					EL C 42					EML 42					EML 1"3/8 Z6					EM 65				
	A	LT	Z	L	Ød	A	LT	Z	L	Ød	A	LT	Z	L	Ød	A	LT	Z	L	Ød	A	LT	Z	L	Ød
35002	-					-					-					-					497.5	436.5	121.5	105	65
35003	-					-					-					-					654.5	361.5			
35004	692.5	304	64	50	28	692.5	304	64	82	42	692.5	334	94	82	42	692.5	334	94	106	1"3/8	692.5				

PLB	EM 1"3/8 Z6					EP 65				
	A	LT	Z	L	Ød	A	LT	Z	L	Ød
35002	497.5	436.5	121.5	105	1"3/8	497.5	468	153	105	65
35003	654.5	361.5				654.5	393			
35004	692.5					692.5				

PLB	~ Kg						
	EL C 28	EL C 42	EML 42	EML 1"3/8 Z6	EM 65	EM 1"3/8 Z6	EP 65
35002	-	-	-	-	367.0	367.0	398.0
35003	-	-	-	-	424.0	424.0	455.0
35004	369.5	370.0	373.0	373.0	381.0	381.0	412.0

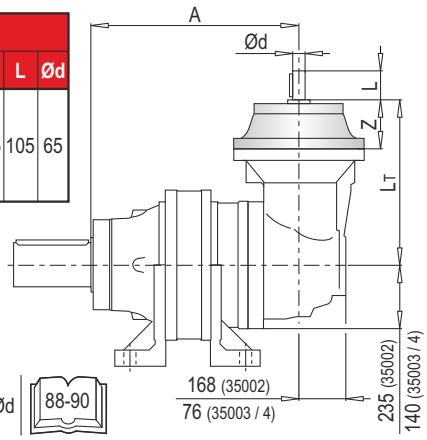

Ød 88-90

AKSESUARLAR / ACCESSORIES / ZUBEHÖR / ACCESSORI / ACCESSOIRES / ACCESORIOS

BS
Spline kaplin / Splined bushing / Innenverzahnte Buchse
Boccola scanalata / Moyeu cannelé / Casquillo ranurado

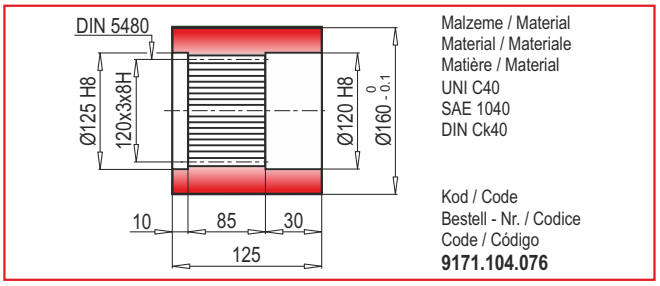

Malzeme / Material
Material / Materiale
Matière / Material
UNI C40
SAE 1040
DIN Ck40

Kod / Code
Bestell - Nr. / Codice
Code / Código
9171.104.076

KB
Spline mil / Splined rod / Außenverzahnte Welle
Barra scanalata / Arbre cannelé / Barra ranurada

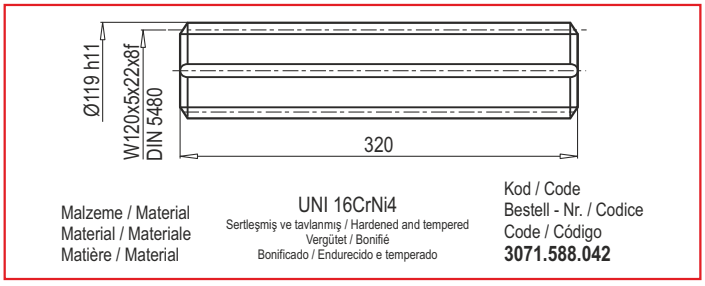

Malzeme / Material
Material / Materiale
Matière / Material

UNI 16CrNi4
Sertleşmiş ve tavlanmış / Hardened and tempered
Vergütet / Bonifié
Bonificado / Endurecido e temperado

Kod / Code
Bestell - Nr. / Codice
Code / Código
3071.588.042

FL
Flanş / Flange / Flansch
Flangia / Bride / Brida

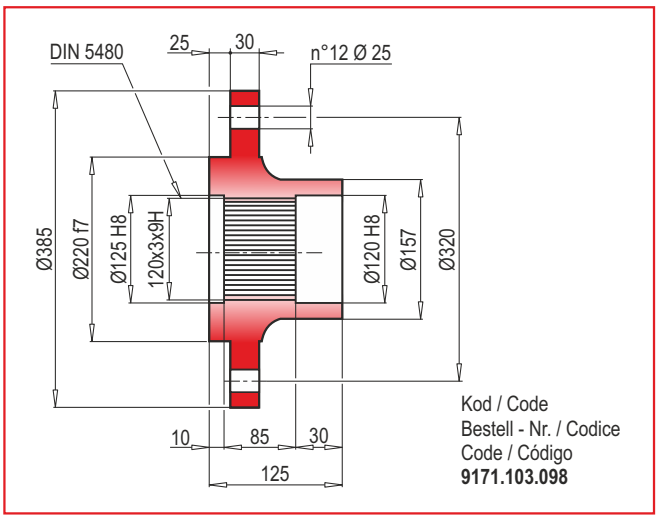

Kod / Code
Bestell - Nr. / Codice
Code / Código
9171.103.098

GA
Konik sıktırma / Shrink disc / Schrumpfscheibe
Giunto di attrito / Frette de serrage / Disco de contracción

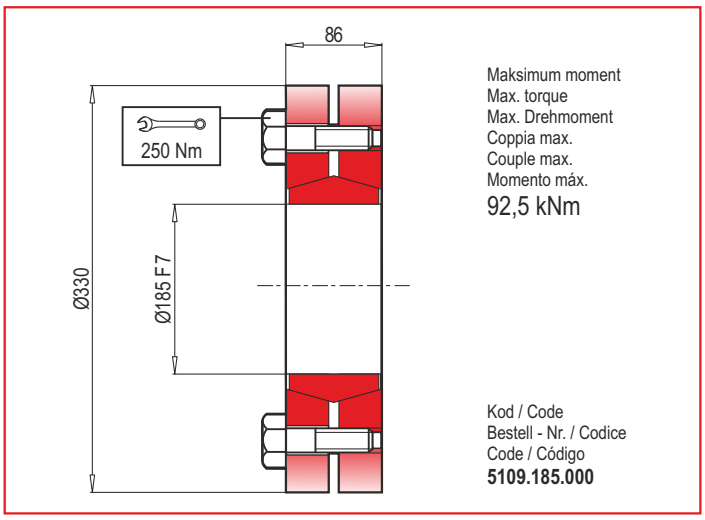

Maksimum moment
Max. torque
Max. Drehmoment
Coppia max.
Couple max.
Momento máx.
92,5 kNm

Kod / Code
Bestell - Nr. / Codice
Code / Código
5109.185.000

FF
Sabitleme rondelası / Stop bottom plate / Endscheibe
Fondello di arresto / Bouchon de fermeture / Tapón de detención

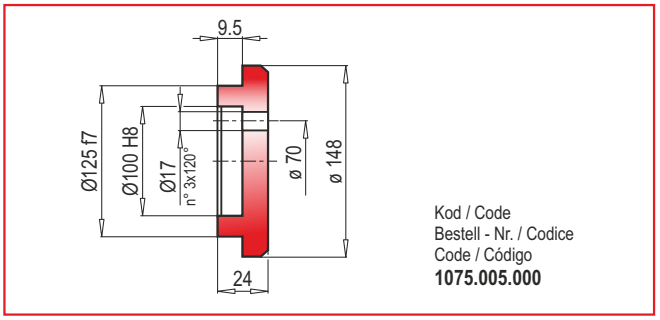

Kod / Code
Bestell - Nr. / Codice
Code / Código
1075.005.000

TR RADYAL YÜKLER (Fr)

Aşağıdaki grafikler istenilen $n_2$xh değerinin elde edilmesi için gerekli olan radyal yükleri ve K faktörlerini göstermektedir.

EN RADIAL LOADS (Fr)

The following curves show the radial loads and the K factors to obtain the required n2xh value.

DE RADIALLAST (Fr)

In den nachstehenden Diagrammen ist die Radiallast un der Koeffizient K dargestellt und kann mit dem gewünschten Wert $n_2$xh verglichen werden.

IT CARICHI RADIALI (Fr)

Nei diagrammi seguenti sono riportati i carichi radiali e i coefficienti K per rapportarli al valore $n_2$xh desiderato.

FR CHARGES RADIALES (Fr)

Dans les diagrammes suivants sont indiqués les charges radiales et les facteurs K de façon à obtenir la valeur $n_2$xh désirée.

ES CARGAS RADIALES (Fr)

En los siguientes diagramas se indican las cargas radiales y los coefici - entes K para obtener el valor requerido $n_2$xh.

M - CPC*

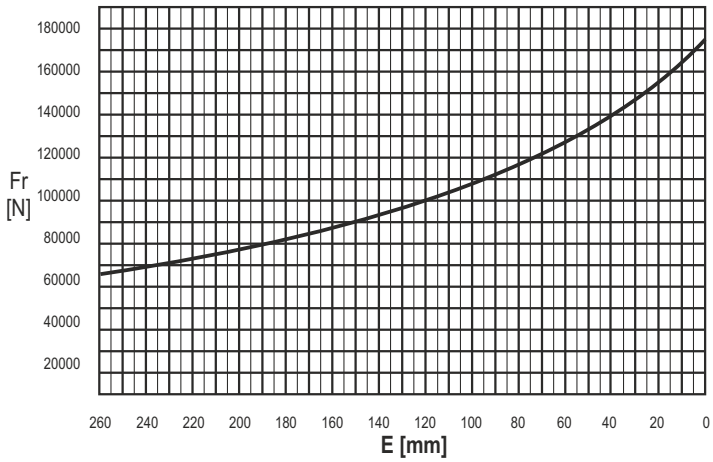

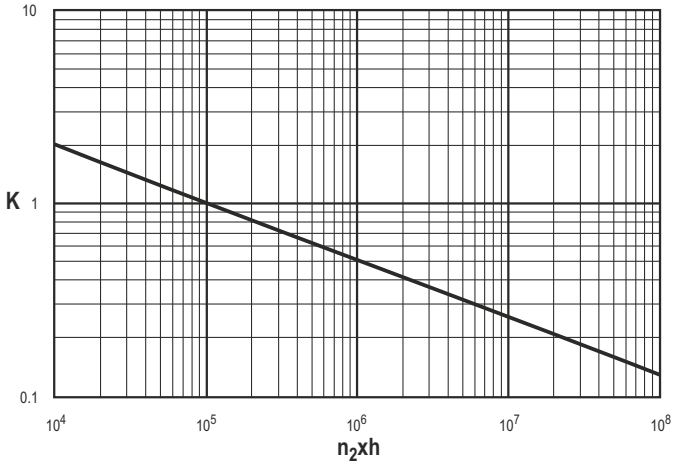

	n x h				
	10^5	10^4	10^6	10^7	10^8
M	Fr	Fr • K			
CPC*	Fr • 0.75	Fr • K • 0.75			

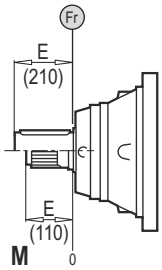

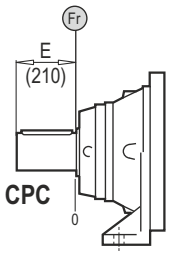

TR EKSENEL YÜKLER (Fa)

Tabloda yer alan eksenel yük değerleri, çıkış tipine ve uygulamanın yük yönüne göre değişir.

EN AXIAL LOADS (Fa)

The values of the axial loads in the table refer to the output versions and load direction of application.

DE AXIALLAST (Fa)

Die dargestellten Werte der Axiallast basieren auf der Version und der applizierten Lastrichtung.

IT CARICHI ASSIALI (Fa)

I valori dei carichi assiali indicati in tabella sono riferiti alle versioni e alla direzione di applicazione del carico.

FR CHARGES AXIALES (Fa)

Les valeurs des charges axiales indiquées dans le tableau se réfèrent aux versions et à la direction d'application de lacharge.

ES CARGAS AXIALES (Fa)

Los valores de las cargas axiales indicados en la tabla se refieren a las versiones y a la dirección de aplicación de la carga.

Fa [N]	M	CPC	
	80000	80000	←
	100000	100000	→

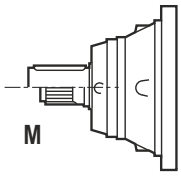

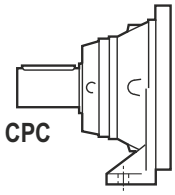

TEKNİK VERİLER / TECHNICAL DATA / TECHNISCHE DATEN / DATI TECNICI / DONNÉES TECHNIQUES / DATOS TÉCNICAS

	i_{ges}	M_2max (n1: 1400rpm) (Nm)
50001	3.95 ... 6.00	25740
50002	14.1 ... 40.5	35660
50003	53.1 ... 293.6	44030
50004	324.8 ... 1982.0	62640

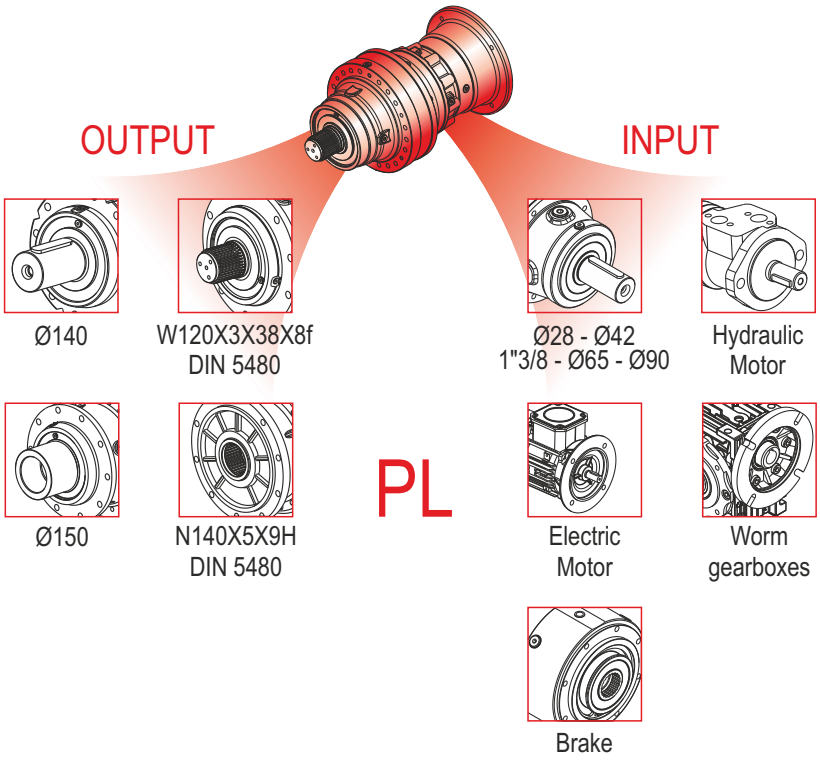

	i_{ges}	M_2max (n1: 1400rpm) (Nm)
50002	12.1 ... 28.0	31320
50003	58.5 ... 220.5	43100
50004	241.5 ... 1598.6	56750

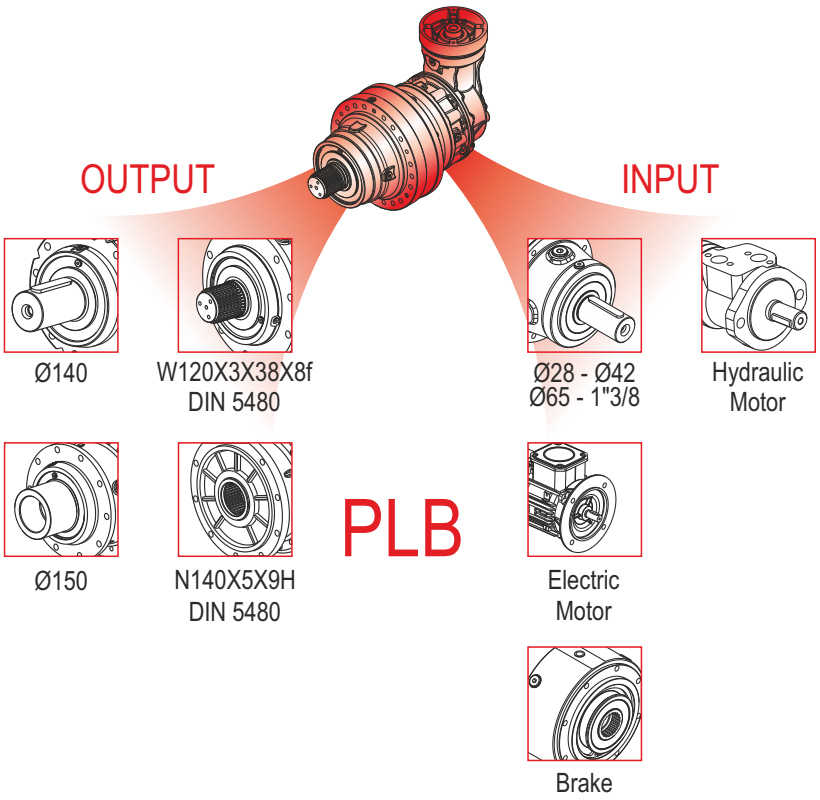

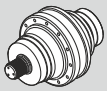	Pt [kW]	n_{1max} [min^{-1}]	i_{ges}	Mc [kNm]				Giriş- Input - Antrieb - Entrata - Entrée - Entrada		
				n_2 x h	n_2 x h	n_2 x h	n_2 x h			
				10.000	20.000	50.000	100.000	IEC (B5)	PMRV / PRV	EL - EML EM - EP - ET
PL 50001	60	1200	3.95 5.06 6.00	70.06 51.29 40.91	62.02 45.39 36.21	52.77 38.63 30.81	46.72 34.19 27.27	160 180 200 225 250	-	ET 90
PL 50002	38	2000	14.1 16.9 21.7 26.7 28.4 33.6 40.5	70.06 70.06 51.29 70.06 51.29 40.91 40.91	62.02 62.02 45.39 62.02 45.39 36.21 36.21	52.77 52.77 38.63 52.77 38.63 30.81 30.81	46.72 46.72 34.19 46.72 34.19 27.27 27.27	160 180 200 225	110 130 150	EM 65 EM 1"3/8 Z6 EP 65 ET 90
PL 50003	25	2800	53.1 64.0 74.2 84.4 93.0 108.0 116.9 130.2 138.6 157.3 170.1 205.5 247.7 293.6	70.06 70.06 51.29 70.06 51.29 51.29 51.29 51.29 40.91 51.29 51.29 51.29 51.29 40.91	62.02 62.02 45.39 62.02 45.39 45.39 45.39 45.39 36.21 45.39 45.39 45.39 45.39 36.21	52.77 52.77 38.63 52.77 38.63 38.63 38.63 38.63 30.81 38.63 38.63 38.63 38.63 30.81	46.72 46.72 34.19 46.72 34.19 34.19 34.19 34.19 27.27 34.19 34.19 34.19 34.19 27.27	63 71 80 90 100 112 132 160 180	050 063 075 090 110 130 150	EL C 28 EL C 42 EML 42 EML 1"3/8 Z6 EM 65 EM 1"3/8 Z6 EP 65
PL 50004	20	2800	324.8 358.5 391.5 432.2 471.9 511.6 564.7 591.0 616.6 686.4 789.4 878.7 952.6 1061.8 1151.0 1258.4 1387.4 1672.3 1982.0	70.06 70.06 70.06 70.06 70.06 70.06 70.06 70.06 70.06 70.06 51.29 51.29 51.29 51.29 51.29 40.91 51.29 51.29 40.91	62.02 62.02 62.02 62.02 62.02 62.02 62.02 62.02 62.02 62.02 45.39 45.39 45.39 45.39 45.39 36.21 45.39 45.39 36.21	52.77 52.77 52.77 52.77 52.77 52.77 52.77 52.77 52.77 52.77 38.63 38.63 38.63 38.63 38.63 30.81 38.63 38.63 30.81	46.72 46.72 46.72 46.72 46.72 46.72 46.72 46.72 46.72 46.72 34.19 34.19 34.19 34.19 34.19 27.27 34.19 34.19 27.27	63 71 80 90 100 112 132 160 180	050 063 075 090	EL C 28 EL C 42 EML 42 EML 1"3/8 Z6

	Pt [kW]	n_{1max} [min^{-1}]	i_{ges}	Mc [kNm]				Giriş- Input - Antrieb - Entrata - Entrée - Entrada	
				n_2 x h	n_2 x h	n_2 x h	n_2 x h		
				10.000	20.000	50.000	100.000	IEC (B5)	EL - EML EM - EP - ET
PLB 50002	38	2000	12.1 15.5 18.4 23.6 28.0	70.06 51.29 40.91 51.29 40.91	62.02 45.39 36.21 45.39 36.21	52.77 38.63 30.81 38.63 30.81	46.72 34.19 27.27 34.19 27.27	160 180 200 225	EM 65 EM 1"3/8 Z6 EP 65
PLB 50003	25	2800	58.5 76.5 97.9 118.1 139.9 154.3 220.5	70.06 70.06 51.29 51.29 40.91 51.29 40.91	62.02 62.02 45.39 45.39 36.21 45.39 36.21	52.77 52.77 38.63 38.63 30.81 38.63 30.81	46.72 46.72 34.19 34.19 27.27 34.19 27.27	80 90 100 112 132 160 180	EM 65 EM 1"3/8 Z6 EP 65
PLB 50004	20	2800	241.5 289.0 315.8 351.3 395.2 455.5 506.3 543.4 587.6 669.0 708.7 797.5 856.4 926.1 961.2 1119.0 1348.8 1598.6	70.06 70.06 70.06 70.06 70.06 70.06 51.29 51.29 51.29 51.29 51.29 51.29 51.29 51.29 51.29 51.29 51.29 40.91	62.02 62.02 62.02 62.02 62.02 62.02 45.39 45.39 45.39 45.39 45.39 45.39 45.39 45.39 45.39 45.39 45.39 36.21	52.77 52.77 52.77 52.77 52.77 52.77 38.63 38.63 38.63 38.63 38.63 38.63 38.63 38.63 38.63 38.63 38.63 30.81	46.72 46.72 46.72 46.72 46.72 46.72 34.19 34.19 34.19 34.19 34.19 34.19 34.19 34.19 34.19 34.19 34.19 27.27	80 90 100 112 132 160 180	EL C 28 EL C 42 EML 42 EML 1"3/8 Z6 EM 65 EM 1"3/8 Z6 EP 65

(n_2 x h = 20.000)

$$M_{max} = M_C \times 2$$

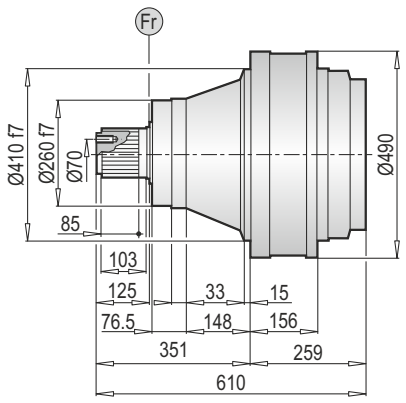

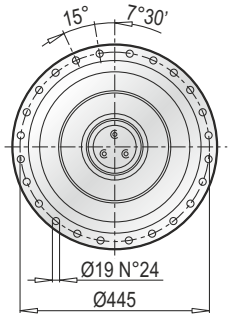

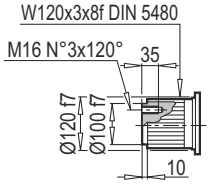

Aksesuarlar
Accessories
Zubehör
Accessori
Accessoires
Accesorios

PL 50000 MS - Elektrik Motor Adaptörleri (IEC) / Electrıc Motor Couplings (IEC) / Anbauvorrichtung Für Elektromotore (IEC) / Predisposizioni Per Motori Elettrici (IEC) / Adaptations Pour Moteurs Electriques (IEC) / Acoplamientos Para Motores Eléctricos (IEC)

PL	IEC 63			IEC 71			IEC 80			IEC 90			IEC 100			IEC 112		
	LT	Z	ØD	LT	Z	ØD	LT	Z	ØD	LT	Z	ØD	LT	Z	ØD	LT	Z	ØD
50001	-			-			-			-			-			-		
50002	-			-			-			-			-			-		
50003	473.5	36	140	473.5	36	160	493.5	56	200	493.5	56	200	503.5	66	250	503.5	66	250
50004	534.5			534.5			554.5			554.5			564.5			564.5		

PL	IEC 132			IEC 160			IEC 180			IEC 200			IEC 225			IEC 250		
	LT	Z	ØD	LT	Z	ØD	LT	Z	ØD	LT	Z	ØD	LT	Z	ØD	LT	Z	ØD
50001	-			409	150	350	409	150	350	409	150	400	398	139	450	398	139	550
50002	-			484	118		484	118		514	148		-			-		
50003	537.5	100	300	576.5	139		576.5	139		-			-			-		
50004	598.5			637.5			637.5			-			-			-		

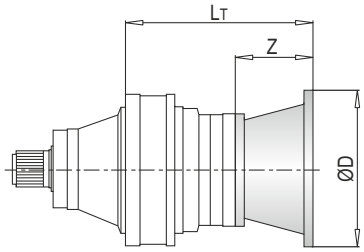

PL	IEC ~ Kg											
	63	71	80	90	100	112	132	160	180	200	225	250
50001	-	-	-	-	-	-	-	363	363	368	374	386
50002	-	-	-	-	-	-	-	399	399	409	-	-
50003	398	398	400	400	401	401	405	415	415	-	-	-
50004	406	406	408	408	409	409	413	423	423	-	-	-

PL 50000 MS - Giriş Milleri / Input Shafts / Antriebswellen / Alberi Entrata / Arbres D'entree / Ejes De Entrada

PL	EL C 28				EL C 42				EML 42				EML 1"3/8 Z6				EM 65				EM 1"3/8 Z6			
	LT	Z	L	Ød	LT	Z	L	Ød	LT	Z	L	Ød	LT	Z	L	Ød	LT	Z	L	Ød	LT	Z	L	Ød
50001	-				-				-				-				-				-			
50002	-				-				-				-				487.5	121.5	105	65	487.5	121.5	105	1"3/8
50003	501.5	64	50	28	501.5	64	82	42	531.5	94	82	42	531.5	94	106	1"3/8	559				559			
50004	562.5				562.5				592.5				592.5				-				-			

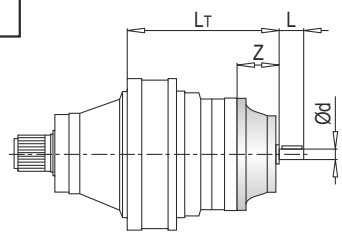

PL	EP 65				ET 90			
	LT	Z	L	Ød	LT	Z	L	Ød
50001	-				430.5	171.5	170	90
50002	519	153	105	65	537.5			
50003	562.5				-			
50004	-				-			

PL	~ Kg							
	EL C 28	EL C 42	EML 42	EML 1"3/8 Z6	EM 65	EM 1"3/8 Z6	EP 65	ET 90
50001	-	-	-	-	-	-	-	366.0
50002	-	-	-	-	394.0	394.0	402.0	425.0
50003	398.5	399.0	402.0	402.0	410.0	410.0	418.0	-
50004	406.5	407.0	410.0	410.0	-	-	-	-

PL 50000 MS - Sonsuz Dişlili Redüktör Adaptörleri (PMRV/PRV) / Worm Gearbox Adaptors (PMRV/PRV) / Anschluss Für Schneckengetriebe (PMRV/PRV) / Predisposizioni Per Riduttori A Vite Senza Fine (PMRV/PRV) / Adaptation Pour Reducteurs A Vis Sans Fin (PMRV/PRV) / Acoplamiento Para Reductores De Tornillo Sin Fin (PMRV/PRV)

PL	PMRV/PRV 050					PMRV/PRV 063					PMRV/PRV 075				
	LM	l	h	MA	G	LM	l	h	MA	G	LM	l	h	MA	G
50002	-					-					-				
50003	559	50	110	60	80	568.5	63	135	72	95	547.5	75	161	86	112.5
50004	620					629.5					608.5				

PL	PMRV/PRV 090					PMRV/PRV 110					PMRV/PRV 130				
	LM	l	h	MA	G	LM	l	h	MA	G	LM	l	h	MA	G
50002	-					500	110	237.5	127.5	160	505.5	130	277.5	147.5	180
50003	557.5	90	193	103	129.5	571.5					577				
50004	618.5					-					-				

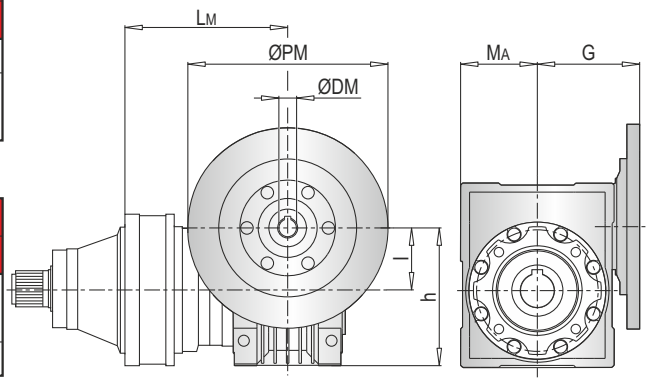

PL	PMRV/PRV 150				
	LM	l	h	MA	G
50002	522	150	320	170	210
50003	593.5				
50004	-				

PL	PMRV/PRV ~ Kg						
	050	063	075	090	110	130	150
50002	-	-	-	-	423	440	476
50003	401	404.5	407	412	439	456	492
50004	409	412.5	415	420	-	-	-

ØPM
ØDM
105

PLB 50000 MS - Elektrik Motor Adaptörleri (IEC) / Electric Motor Couplings (IEC) / Anbauvorrichtung Für Elektromotore (IEC) / Predisposizioni Per Motori Elettrici (IEC) / Adaptations Pour Moteurs Electriques (IEC) / Acoplamientos Para Motores Eléctricos (IEC)

PLB	IEC 80				IEC 90				IEC 100				IEC 112			
	A	LT	Z	ØD	A	LT	Z	ØD	A	LT	Z	ØD	A	LT	Z	ØD
50002	-				-				-				-			
50003	454	296	56	200	454	296	56	200	454	306	66	250	454	306	66	250
50004	539				539				539				539			

PLB	IEC 132				IEC 160				IEC 180				IEC 200			
	A	LT	Z	ØD	A	LT	Z	ØD	A	LT	Z	ØD	A	LT	Z	ØD
50002	-				440	433	118	350	440	433	118	350	440	463	148	400
50003	454	340	100	300	454	358			454	358			-			
50004	539				539	358	139		-				-			

PLB	IEC ~ Kg							
	80	90	100	112	132	160	180	200
50002	-	-	-	-	-	390	390	400
50003	421	421	422	422	426	436	436	-
50004	440	440	441	441	445	445	-	-

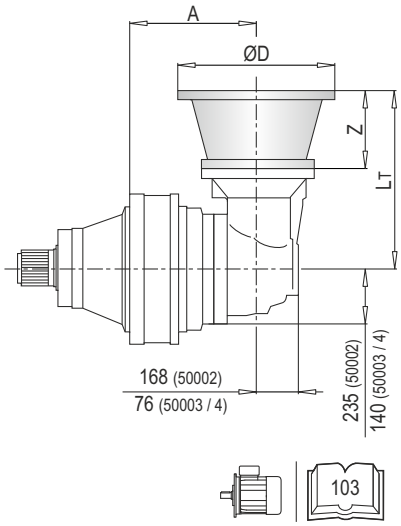

PLB 50000 MS - Giriş Milleri / Input Shafts / Antriebswellen / Alberi Entrata / Arbres D'entree / Ejes De Entrada

PLB	EL C 28					EL C 42					EML 42					EML 1"3/8 Z6					EM 65				
	A	LT	Z	L	Ød	A	LT	Z	L	Ød	A	LT	Z	L	Ød	A	LT	Z	L	Ød	A	LT	Z	L	Ød
50002	-					-					-					-					440	436.5	121.5	105	65
50003	-					-					-					-					454	361.5			
50004	539	304	64	50	28	539	304	64	82	42	539	334	94	82	42	539	334	94	106	1"3/8	539				

PLB	EM 1"3/8 Z6					EP 65				
	A	LT	Z	L	Ød	A	LT	Z	L	Ød
50002	440	436.5	121.5	105	1"3/8	440	468	153	105	65
50003	454	361.5				454	393			
50004	539					539				

PLB	~ Kg						
	EL C 28	EL C 42	EML 42	EML 1"3/8 Z6	EM 65	EM 1"3/8 Z6	EP 65
50002	-	-	-	-	385.0	385.0	384.0
50003	-	-	-	-	431.0	431.0	440.0
50004	438.5	439.0	442.0	442.0	450.0	450.0	459.0

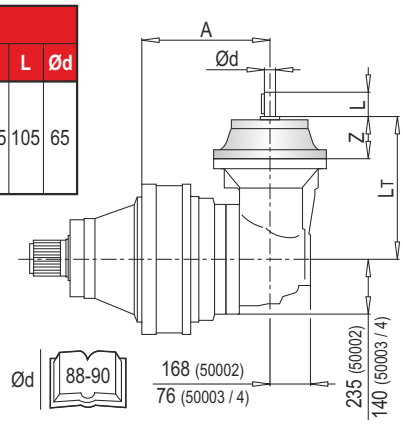

Ød 88-90

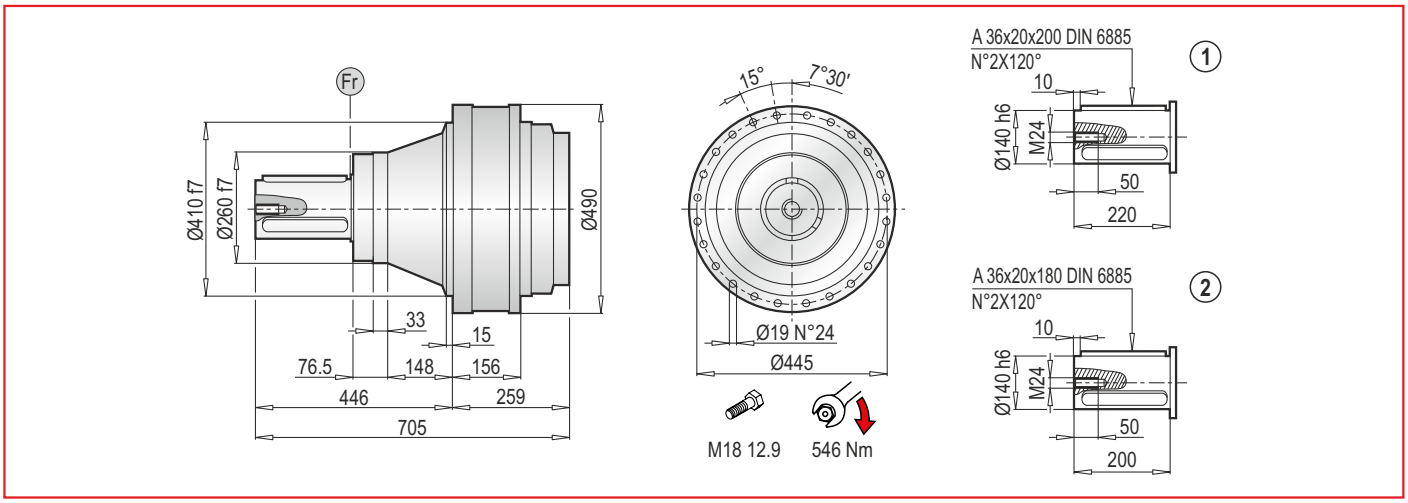

PL 50000 MC - Elektrik Motor Adaptörleri (IEC) / Electrıc Motor Couplings (IEC) / Anbauvorrichtung Für Elektromotore (IEC) / Predisposizioni Per Motori Elettrici (IEC) / Adaptations Pour Moteurs Electriques (IEC) / Acoplamientos Para Motores Eléctricos (IEC)

PL	IEC 63			IEC 71			IEC 80			IEC 90			IEC 100			IEC 112		
	LT	Z	ØD	LT	Z	ØD	LT	Z	ØD	LT	Z	ØD	LT	Z	ØD	LT	Z	ØD
50001	-			-			-			-			-			-		
50002	-			-			-			-			-			-		
50003	473.5	36	140	473.5	36	160	493.5	56	200	493.5	56	200	503.5	66	250	503.5	66	250
50004	534.5			534.5			554.5			554.5			564.5			564.5		

PL	IEC 132			IEC 160			IEC 180			IEC 200			IEC 225			IEC 250		
	LT	Z	ØD	LT	Z	ØD	LT	Z	ØD	LT	Z	ØD	LT	Z	ØD	LT	Z	ØD
50001	-			409	150	350	409	150	350	409	150	400	398	139	450	398	139	550
50002	-			484	118		484	118		514	148		-			-		
50003	537.5	100	300	576.5	139		576.5	139		-			-			-		
50004	598.5			637.5			637.5			-			-			-		

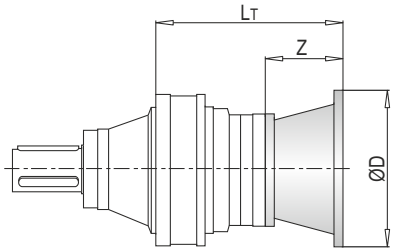

PL	IEC ~ Kg											
	63	71	80	90	100	112	132	160	180	200	225	250
50001	-	-	-	-	-	-	-	363	363	368	374	386
50002	-	-	-	-	-	-	-	399	399	409	-	-
50003	398	398	400	400	401	401	405	415	415	-	-	-
50004	406	406	408	408	409	409	414	423	423	-	-	-

PL 50000 MC - Giriş Milleri / Input Shafts / Antriebswellen / Alberi Entrata / Arbres D'entree / Ejes De Entrada

PL	EL C 28				EL C 42				EML 42				EML 1"3/8 Z6				EM 65				EM 1"3/8 Z6			
	LT	Z	L	Ød	LT	Z	L	Ød	LT	Z	L	Ød	LT	Z	L	Ød	LT	Z	L	Ød	LT	Z	L	Ød
50001	-				-				-				-				-				-			
50002	-				-				-				-				487.5	121.5	105	65	487.5	121.5	105	1"3/8
50003	501.5	64	50	28	501.5	64	82	42	531.5	94	82	42	531.5	94	106	1"3/8	559.5				559			
50004	562.5				562.5				592.5				592.5				-				-			

PL	EP 65				ET 90			
	LT	Z	L	Ød	LT	Z	L	Ød
50001	-				430.5	171.5	170	90
50002	519	153	105	65	537.5			
50003	590.5				-			
50004	-				-			

PL	~ Kg							
	EL C 28	EL C 42	EML 42	EML 1"3/8 Z6	EM 65	EM 1"3/8 Z6	EP 65	ET 90
50001	-	-	-	-	-	-	-	366.0
50002	-	-	-	-	394.0	394.0	402.0	425.0
50003	398.5	399.0	402.0	402.0	410.0	410.0	418.0	-
50004	406.5	407.0	410.0	410.0	-	-	-	-

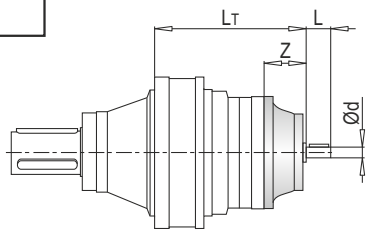

PL 50000 MC - Sonsuz Dişlili Redüktör Adaptörleri (PMRV/PRV) / Worm Gearbox Adaptors (PMRV/PRV) / Anschluss Für Schneckengetriebe (PMRV/PRV) / Predisposizioni Per Riduttori A Vite Senza Fine (PMRV/PRV) / Adaptation Pour Reducteurs A Vis Sans Fin (PMRV/PRV) / Acoplamiento Para Reductores De Tornillo Sin Fin (PMRV/PRV)

PL	PMRV/PRV 050					PMRV/PRV 063					PMRV/PRV 075				
	LM	l	h	MA	G	LM	l	h	MA	G	LM	l	h	MA	G
50002	-					-					-				
50003	559	50	110	60	80	568.5	63	135	72	95	547.5	75	161	86	112.5
50004	620					629.5					608.5				

PL	PMRV/PRV 090					PMRV/PRV 110					PMRV/PRV 130				
	LM	l	h	MA	G	LM	l	h	MA	G	LM	l	h	MA	G
50002	-					500	110	237.5	127.5	160	505.5	130	277.5	147.5	180
50003	557.5	90	193	103	129.5	571.5					577				
50004	618.5					-					-				

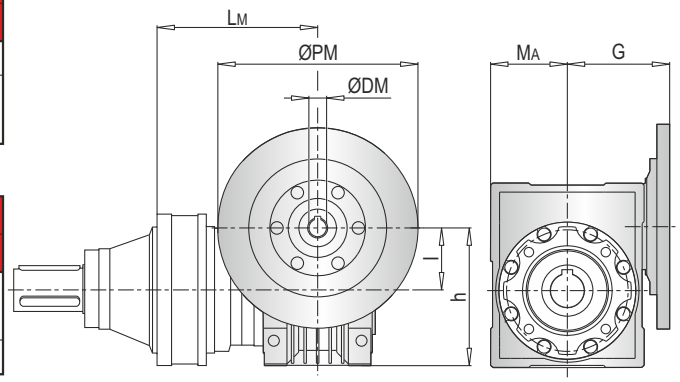

PL	PMRV/PRV 150				
	LM	l	h	MA	G
50002	522	150	320	170	210
50003	593.5				
50004	-				

PL	PMRV/PRV ~ Kg						
	050	063	075	090	110	130	150
50002	-	-	-	-	423	440	476
50003	401	404.5	407	412	439	456	492
50004	409	412.5	415	420	-	-	-

ØPM
ØDM
105

PLB 50000 MC - Elektrik Motor Adaptörleri (IEC) / Electric Motor Couplings (IEC) / Anbauvorrichtung Für Elektromotore (IEC) / Predisposizioni Per Motori Elettrici (IEC) / Adaptations Pour Moteurs Electriques (IEC) / Acoplamientos Para Motores Eléctricos (IEC)

PLB	IEC 80				IEC 90				IEC 100				IEC 112			
	A	LT	Z	ØD	A	LT	Z	ØD	A	LT	Z	ØD	A	LT	Z	ØD
50002	-				-				-				-			
50003	454	296	56	200	454	296	56	200	454	306	66	250	454	306	66	250
50004	539				539				539				539			

PLB	IEC 132				IEC 160				IEC 180				IEC 200			
	A	LT	Z	ØD	A	LT	Z	ØD	A	LT	Z	ØD	A	LT	Z	ØD
50002	-				440	433	118	350	440	433	118	350	440	463	148	400
50003	454	340	100	300	454	358			454	458			-			
50004	539				539	358	139		-				-			

PLB	IEC ~ Kg							
	80	90	100	112	132	160	180	200
50002	-	-	-	-	-	390	390	400
50003	421	421	422	422	426	436	436	-
50004	440	440	441	441	445	445	-	-

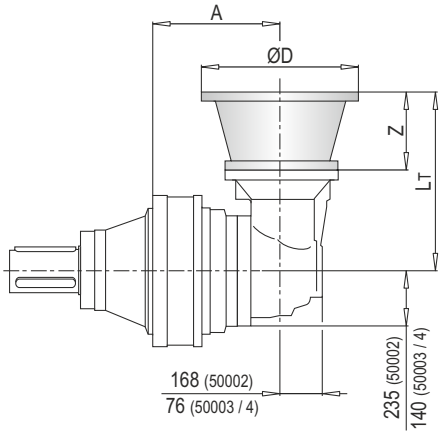

103

PLB 50000 MC - Giriş Milleri / Input Shafts / Antriebswellen / Alberi Entrata / Arbres D'entree / Ejes De Entrada

PLB	EL C 28					EL C 42					EML 42					EML 1"3/8 Z6					EM 65				
	A	LT	Z	L	Ød	A	LT	Z	L	Ød	A	LT	Z	L	Ød	A	LT	Z	L	Ød	A	LT	Z	L	Ød
50002	-					-					-					-					440	436.5	121.5	105	65
50003	-					-					-					-					454	361.5			
50004	539	304	64	50	28	539	304	64	82	42	539	334	94	82	42	539	334	94	106	1"3/8	539				

PLB	EM 1"3/8 Z6					EP 65				
	A	LT	Z	L	Ød	A	LT	Z	L	Ød
50002	440	436.5	121.5	105	1"3/8	440	468	153	105	65
50003	454	361.5				454	393			
50004	539					539				

PLB	~ Kg						
	EL C 28	EL C 42	EML 42	EML 1"3/8 Z6	EM 65	EM 1"3/8 Z6	EP 65
50002	-	-	-	-	385.0	385.0	384.0
50003	-	-	-	-	431.0	431.0	440.0
50004	438.5	439.0	442.0	442.0	450.0	450.0	459.0

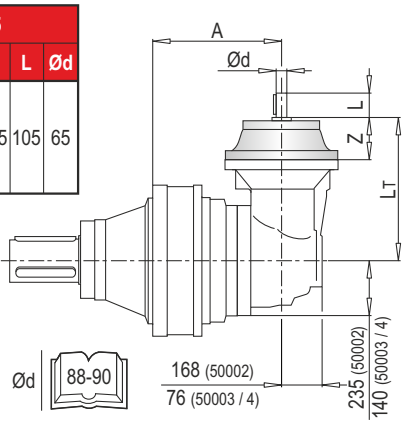

Ød 88-90

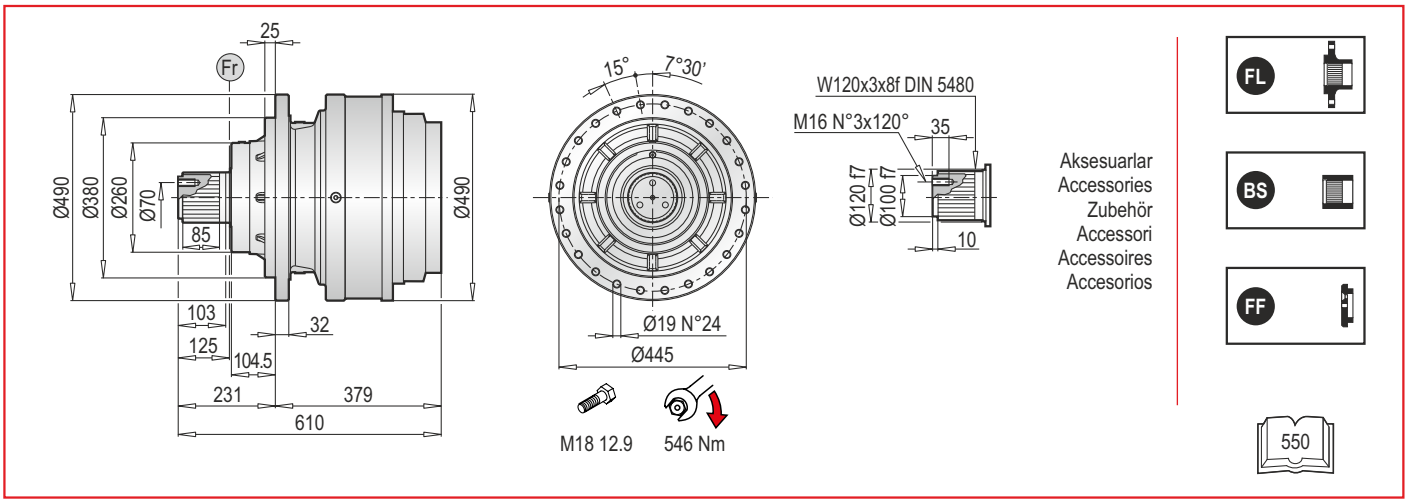

PL 50000 MSF - Elektrik Motor Adaptörleri (IEC) / Electrıc Motor Couplings (IEC) / Anbauvorrichtung Für Elektromotore (IEC) / Predisposizioni Per Motori Elettrici (IEC) / Adaptations Pour Moteurs Electriques (IEC) / Acoplamientos Para Motores Eléctricos (IEC)

PL	IEC 63			IEC 71			IEC 80			IEC 90			IEC 100			IEC 112		
	LT	Z	ØD	LT	Z	ØD	LT	Z	ØD	LT	Z	ØD	LT	Z	ØD	LT	Z	ØD
50001	-			-			-			-			-			-		
50002	-			-			-			-			-			-		
50003	593.5	36	140	593.5	36	160	613.5	56	200	613.5	56	200	623.5	66	250	623.5	66	250
50004	654.5			654.5			674.5			674.5			684.5			684.5		

PL	IEC 132			IEC 160			IEC 180			IEC 200			IEC 225			IEC 250		
	LT	Z	ØD	LT	Z	ØD	LT	Z	ØD	LT	Z	ØD	LT	Z	ØD	LT	Z	ØD
50001	-			527	148	350	527	148	350	527	148	400	518	139	450	526	147	550
50002	-			604	118		604	118		634	148		-			-		
50003	657.5	100	300	696.5	139		696.5	139		-			-			-		
50004	718.5			757.5			757.5			-			-			-		

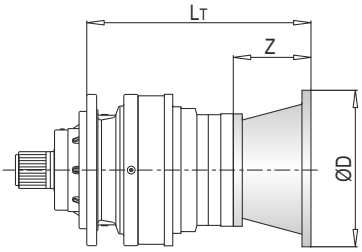

PL	IEC ~ Kg											
	63	71	80	90	100	112	132	160	180	200	225	250
50001	-	-	-	-	-	-	-	393	393	398	404	416
50002	-	-	-	-	-	-	-	429	429	439	-	-
50003	428	428	430	430	431	431	435	445	445	-	-	-
50004	436	436	433	433	439	439	443	453	453	-	-	-

PL 50000 MSF - Giriş Milleri / Input Shafts / Antriebswellen / Alberi Entrata / Arbres D'entree / Ejes De Entrada

PL	EL C 28				EL C 42				EML 42				EML 1"3/8 Z6				EM 65				EM 1"3/8 Z6			
	LT	Z	L	Ød	LT	Z	L	Ød	LT	Z	L	Ød	LT	Z	L	Ød	LT	Z	L	Ød	LT	Z	L	Ød
50001	-				-				-				-				-				-			
50002	-				-				-				-				607.5	121.5	105	65	607.5	121.5	105	1"3/8
50003	621.5	64	50	28	621.5	64	82	42	651.5	94	82	42	651.5	94	106	1"3/8	692.5				692.5			
50004	682.5				682.5				712.5				712.5				-				-			

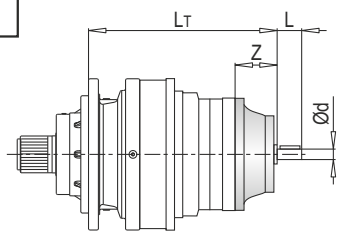

PL	EP 65				ET 90			
	LT	Z	L	Ød	LT	Z	L	Ød
50001	-				553	174	170	90
50002	639	153	105	65	691			
50003	724				-			
50004	-				-			

PL	~ Kg							
	EL C 28	EL C 42	EML 42	EML 1"3/8 Z6	EM 65	EM 1"3/8 Z6	EP 65	ET 90
50001	-	-	-	-	-	-	-	396
50002	-	-	-	-	424	424	432	455
50003	428.5	429	432	432	440	440	448	-
50004	436.5	437	440	440	-	-	-	-

PL 50000 MSF - Sonsuz Dişlili Redüktör Adaptörleri (PMRV/PRV) / Worm Gearbox Adaptors (PMRV/PRV) / Anschluss Für Schneckengetriebe (PMRV/PRV) / Predisposizioni Per Riduttori A Vite Senza Fine (PMRV/PRV) / Adaptation Pour Reducteurs A Vis Sans Fin (PMRV/PRV) / Acoplamiento Para Reductores De Tornillo Sin Fin (PMRV/PRV)

PL	PMRV/PRV 050					PMRV/PRV 063					PMRV/PRV 075				
	LM	l	h	MA	G	LM	l	h	MA	G	LM	l	h	MA	G
50002	-					-					-				
50003	783	50	110	60	80	692.5	63	135	72	95	671.5	75	161	86	112.5
50004	744					753.5					732.5				

PL	PMRV/PRV 090					PMRV/PRV 110					PMRV/PRV 130				
	LM	l	h	MA	G	LM	l	h	MA	G	LM	l	h	MA	G
50002	-					624	110	237.5	127.5	160	631.5	130	277.5	147.5	180
50003	681.5	90	193	103	129.5	709					716.5				
50004	742.5					-					-				

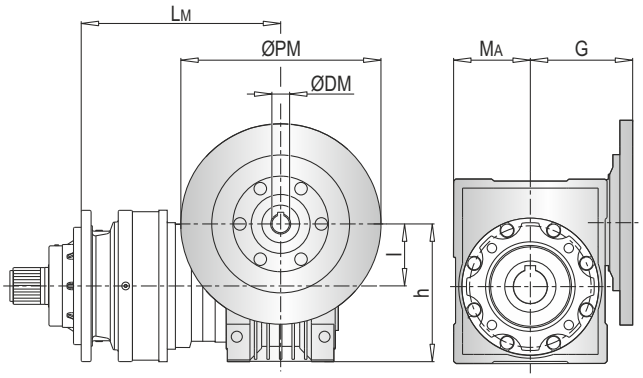

PL	PMRV/PRV 150				
	LM	l	h	MA	G
50002	646	150	320	170	210
50003	731				
50004	-				

PL	PMRV/PRV ~ Kg						
	050	063	075	090	110	130	150
50002	-	-	-	-	453	470	506
50003	431	434.5	437	442	469	486	522
50004	439	442.5	445	450	-	-	-

ØPM
ØDM
105

PLB 50000 MSF - Elektrik Motor Adaptörleri (IEC) / Electric Motor Couplings (IEC) / Anbauvorrichtung Für Elektromotore (IEC) / Predisposizioni Per Motori Elettrici (IEC) / Adaptations Pour Moteurs Electriques (IEC) / Acoplamientos Para Motores Eléctricos (IEC)

PLB	IEC 80				IEC 90				IEC 100				IEC 112			
	A	LT	Z	ØD	A	LT	Z	ØD	A	LT	Z	ØD	A	LT	Z	ØD
50002	-				-				-				-			
50003	574	296	56	200	574	296	56	200	574	306	66	250	574	306	66	250
50004	659				659				659				659			

PLB	IEC 132				IEC 160				IEC 180				IEC 200			
	A	LT	Z	ØD	A	LT	Z	ØD	A	LT	Z	ØD	A	LT	Z	ØD
50002	-				560	433	118	350	560	433	118	350	560	463	148	400
50003	574	340	100	300	574	379	139		574	379	139		-			
50004	659				659				-				-			

PLB	IEC ~ Kg							
	80	90	100	112	132	160	180	200
50002	-	-	-	-	-	420	420	430
50003	451	451	452	452	456	466	466	-
50004	470	470	471	471	475	475	-	-

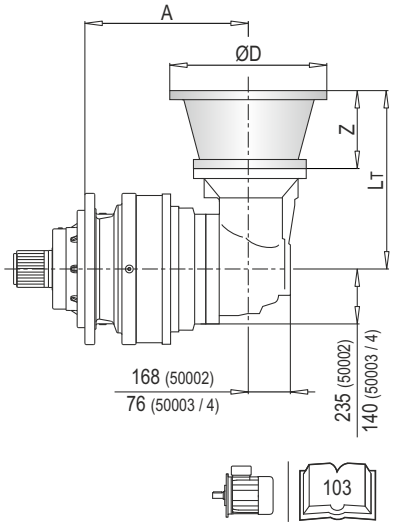

PLB 50000 MSF - Giriş Milleri / Input Shafts / Antriebswellen / Alberi Entrata / Arbres D'entree / Ejes De Entrada

PLB	EL C 28					EL C 42					EML 42					EML 1"3/8 Z6					EM 65				
	A	LT	Z	L	Ød	A	LT	Z	L	Ød	A	LT	Z	L	Ød	A	LT	Z	L	Ød	A	LT	Z	L	Ød
50002	-					-					-					-					560	436.5	121.5	105	65
50003	-					-					-					-					574	377.5			
50004	659	304	64	50	28	659	304	64	82	42	659	334	94	82	42	659	334	94	106	1"3/8	659				

PLB	EM 1"3/8 Z6					EP 65				
	A	LT	Z	L	Ød	A	LT	Z	L	Ød
50002	560	436.5	121.5	105	1"3/8	560	468	153	105	65
50003	574	377.5				574	409			
50004	659					659				

PLB	~ Kg						
	EL C 28	EL C 42	EML 42	EML 1"3/8 Z6	EM 65	EM 1"3/8 Z6	EP 65
50002	-	-	-	-	415	415	414
50003	-	-	-	-	461	461	470
50004	468.5	469	472	472	480	480	489

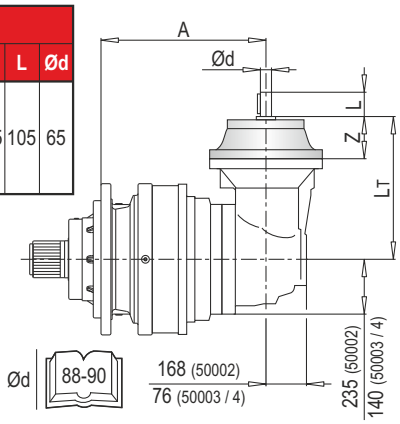

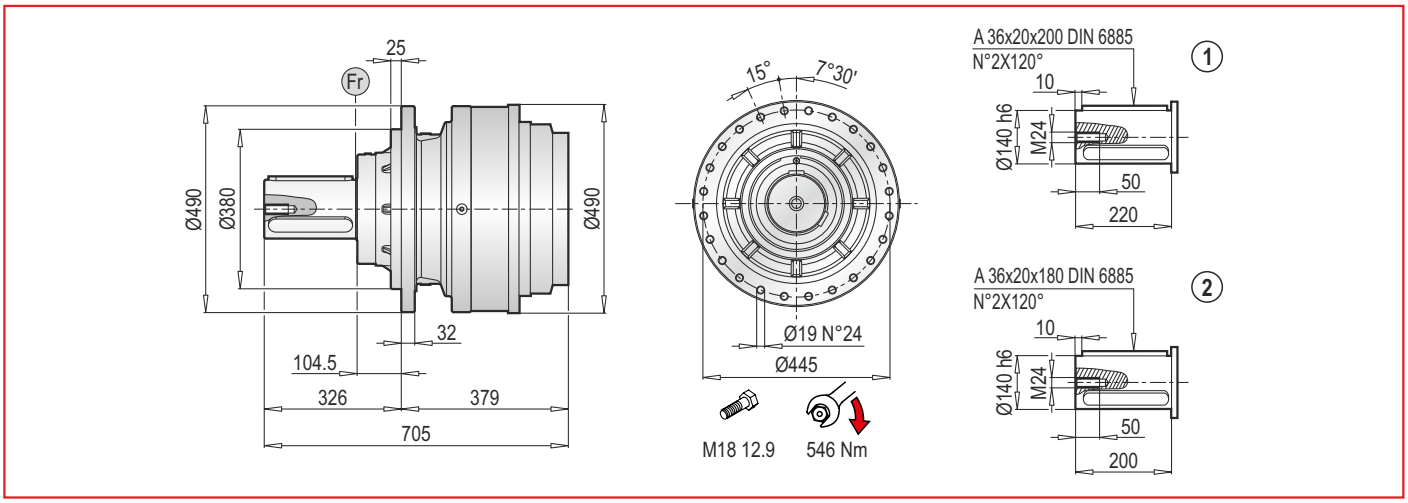

PL 50000 MCF - Elektrik Motor Adaptörleri (IEC) / Electrıc Motor Couplings (IEC) / Anbauvorrichtung Für Elektromotore (IEC) / Predisposizioni Per Motori Elettrici (IEC) / Adaptations Pour Moteurs Electriques (IEC) / Acoplamientos Para Motores Eléctricos (IEC)

PL	IEC 63			IEC 71			IEC 80			IEC 90			IEC 100			IEC 112		
	LT	Z	ØD	LT	Z	ØD	LT	Z	ØD	LT	Z	ØD	LT	Z	ØD	LT	Z	ØD
50001	-			-			-			-			-			-		
50002	-			-			-			-			-			-		
50003	593.5	36	140	593.5	36	160	613.5	56	200	613.5	56	200	623.5	66	250	623.5	66	250
50004	654.5			654.5			674.5			674.5			684.5			684.5		

PL	IEC 132			IEC 160			IEC 180			IEC 200			IEC 225			IEC 250		
	LT	Z	ØD	LT	Z	ØD	LT	Z	ØD	LT	Z	ØD	LT	Z	ØD	LT	Z	ØD
50001	-			527	148	350	527	148	350	527	148	400	518	139	450	526	147	550
50002	-			604	118		604	118		634	148		-			-		
50003	657.5	100	300	696.5	139		696.5	139		-			-			-		
50004	718.5			757.5			757.5			-			-			-		

PL	IEC ~ Kg											
	63	71	80	90	100	112	132	160	180	200	225	250
50001	-	-	-	-	-	-	-	393	393	398	404	416
50002	-	-	-	-	-	-	-	429	429	439	-	-
50003	428	428	430	430	431	431	435	445	445	-	-	-
50004	436	436	433	433	439	439	443	453	453	-	-	-

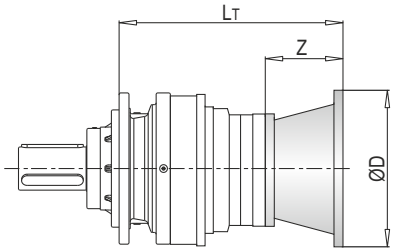

PL 50000 MCF - Giriş Milleri / Input Shafts / Antriebswellen / Alberi Entrata / Arbres D'entree / Ejes De Entrada

PL	EL C 28				EL C 42				EML 42				EML 1"3/8 Z6				EM 65				EM 1"3/8 Z6			
	LT	Z	L	Ød	LT	Z	L	Ød	LT	Z	L	Ød	LT	Z	L	Ød	LT	Z	L	Ød	LT	Z	L	Ød
50001	-				-				-				-				-				-			
50002	-				-				-				-				607.5	121.5	105	65	607.5	121.5	105	1"3/8
50003	621.5	64	50	28	621.5	64	82	42	651.5	94	82	42	651.5	94	106	1"3/8	692.5				692.5			
50004	682.5				682.5				712.5				712.5				-				-			

PL	EP 65				ET 90			
	LT	Z	L	Ød	LT	Z	L	Ød
50001	-				553	174	170	90
50002	639	153	105	65	691			
50003	724				-			
50004	-				-			

PL	~ Kg							
	EL C 28	EL C 42	EML 42	EML 1"3/8 Z6	EM 65	EM 1"3/8 Z6	EP 65	ET 90
50001	-	-	-	-	-	-	-	396
50002	-	-	-	-	424	424	432	455
50003	428.5	429	432	432	440	440	448	-
50004	436.5	437	440	440	-	-	-	-

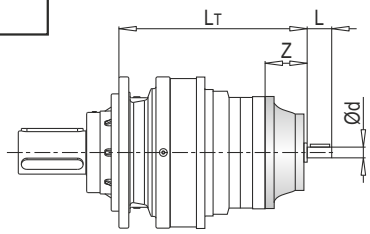

PL 50000 MCF - Sonsuz Dişlili Redüktör Adaptörleri (PMRV/PRV) / Worm Gearbox Adaptors (PMRV/PRV) / Anschluss Für Schneckengetriebe (PMRV/PRV) / Predisposizioni Per Riduttori A Vite Senza Fine (PMRV/PRV) / Adaptation Pour Reducteurs A Vis Sans Fin (PMRV/PRV) / Acoplamiento Para Reductores De Tornillo Sin Fin (PMRV/PRV)

PL	PMRV/PRV 050					PMRV/PRV 063					PMRV/PRV 075				
	LM	l	h	MA	G	LM	l	h	MA	G	LM	l	h	MA	G
50002	-					-					-				
50003	783	50	110	60	80	692.5	63	135	72	95	671.5	75	161	86	112.5
50004	744					753.5					732.5				

PL	PMRV/PRV 090					PMRV/PRV 110					PMRV/PRV 130				
	LM	l	h	MA	G	LM	l	h	MA	G	LM	l	h	MA	G
50002	-					624	110	237.5	127.5	160	631.5	130	277.5	147.5	180
50003	681.5	90	193	103	129.5	709					716.5				
50004	742.5					-					-				

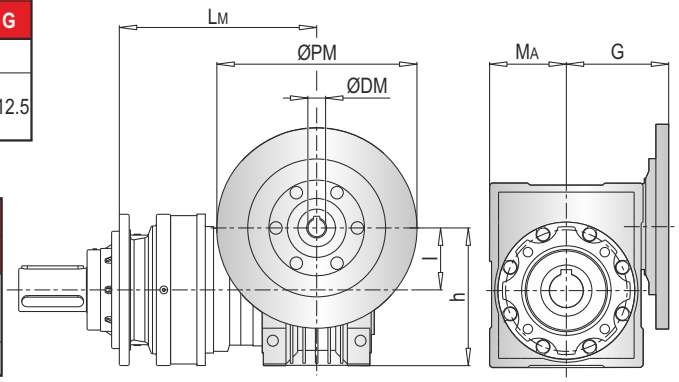

PL	PMRV/PRV 150				
	LM	l	h	MA	G
50002	646	150	320	170	210
50003	731				
50004	-				

PL	PMRV/PRV ~ Kg						
	050	063	075	090	110	130	150
50002	-	-	-	-	453	470	506
50003	431	434.5	437	442	469	486	522
50004	439	442.5	445	450	-	-	-

ØPM
ØDM
105

PLB 50000 MCF - Elektrik Motor Adaptörleri (IEC) / Electric Motor Couplings (IEC) / Anbauvorrichtung Für Elektromotore (IEC) / Predisposizioni Per Motori Elettrici (IEC) / Adaptations Pour Moteurs Electriques (IEC) / Acoplamientos Para Motores Eléctricos (IEC)

PLB	IEC 80				IEC 90				IEC 100				IEC 112			
	A	LT	Z	ØD	A	LT	Z	ØD	A	LT	Z	ØD	A	LT	Z	ØD
50002	-				-				-				-			
50003	574	296	56	200	574	296	56	200	574	306	66	250	574	306	66	250
50004	659				659				659				659			

PLB	IEC 132				IEC 160				IEC 180				IEC 200			
	A	LT	Z	ØD	A	LT	Z	ØD	A	LT	Z	ØD	A	LT	Z	ØD
50002	-				560	433	118	350	560	433	118	350	560	463	148	400
50003	574	340	100	300	574	379	139		574	379	139		-			
50004	659				659				-				-			

PLB	IEC ~ Kg							
	80	90	100	112	132	160	180	200
50002	-	-	-	-	-	420	420	430
50003	451	451	452	452	456	466	466	-
50004	470	470	471	471	475	475	-	-

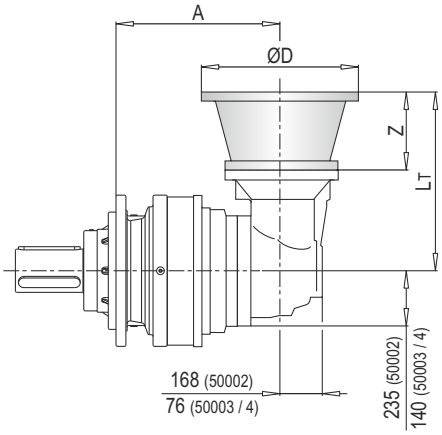

103

PLB 50000 MCF - Giriş Milleri / Input Shafts / Antriebswellen / Alberi Entrata / Arbres D'entree / Ejes De Entrada

PLB	EL C 28					EL C 42					EML 42					EML 1"3/8 Z6					EM 65				
	A	LT	Z	L	Ød	A	LT	Z	L	Ød	A	LT	Z	L	Ød	A	LT	Z	L	Ød	A	LT	Z	L	Ød
50002	-					-					-					-					560	436.5	121.5	105	65
50003	-					-					-					-					574	377.5			
50004	659	304	64	50	28	659	304	64	82	42	659	334	94	82	42	659	334	94	106	1"3/8	659				

PLB	EM 1"3/8 Z6					EP 65				
	A	LT	Z	L	Ød	A	LT	Z	L	Ød
50002	560	436.5	121.5	105	1"3/8	560	468	153	105	65
50003	574	377.5				574	409			
50004	659					659				

PLB	~ Kg						
	EL C 28	EL C 42	EML 42	EML 1"3/8 Z6	EM 65	EM 1"3/8 Z6	EP 65
50002	-	-	-	-	415	415	414
50003	-	-	-	-	461	461	470
50004	468.5	469	472	472	480	480	489

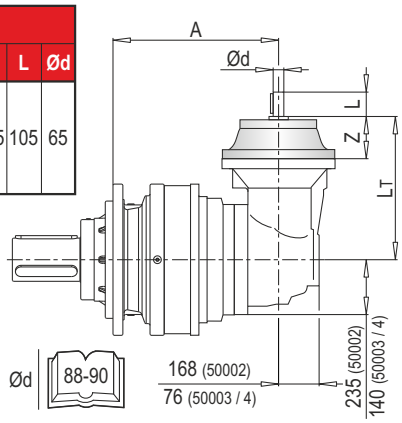

Ød 88-90

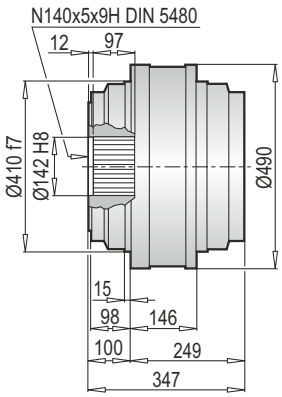

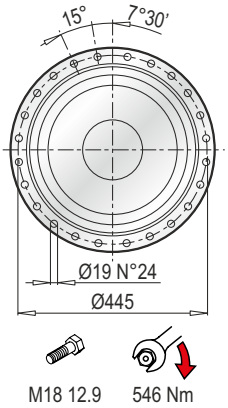

Aksesuarlar
Accessories
Zubehör
Accessori
Accessoires
Accesorios

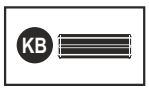

PL 50000 F - Elektrik Motor Adaptörleri (IEC) / Electrıc Motor Couplings (IEC) / Anbauvorrichtung Für Elektromotore (IEC) / Predisposizioni Per Motori Elettrici (IEC) / Adaptations Pour Moteurs Electriques (IEC) / Acoplamientos Para Motores Eléctricos (IEC)

PL	IEC 63			IEC 71			IEC 80			IEC 90			IEC 100			IEC 112		
	LT	Z	ØD	LT	Z	ØD	LT	Z	ØD	LT	Z	ØD	LT	Z	ØD	LT	Z	ØD
50001	-			-			-			-			-			-		
50002	-			-			-			-			-			-		
50003	463.5	36	140	463.5	36	160	483.5	56	200	483.5	56	200	493.5	66	250	493.5	66	250
50004	524.5			524.5			544.5			544.5			554.5			554.5		

PL	IEC 132			IEC 160			IEC 180			IEC 200			IEC 225			IEC 250		
	LT	Z	ØD	LT	Z	ØD	LT	Z	ØD	LT	Z	ØD	LT	Z	ØD	LT	Z	ØD
50001	-			399	150	350	399	150	350	399	150	400	388	139	450	388	139	550
50002	-			474	118		474	118		504	148		-			-		
50003	527.5	100	300	566.5	139		566.5	139		-			-			-		
50004	588.5			627.5			627.5			-			-			-		

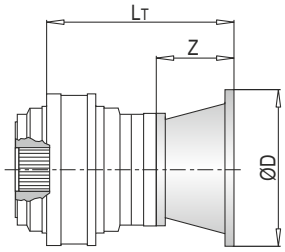

PL	IEC ~ Kg											
	63	71	80	90	100	112	132	160	180	200	225	250
50001	-	-	-	-	-	-	-	303	303	308	314	326
50002	-	-	-	-	-	-	-	341	341	351	-	-
50003	324	324	326	326	327	327	331	357	357	-	-	-
50004	340	340	342	342	343	343	347	365	365	-	-	-

PL 50000 F - Giriş Milleri / Input Shafts / Antriebswellen / Alberi Entrata / Arbres D'entree / Ejes De Entrada

PL	EL C 28				EL C 42				EML 42				EML 1"3/8 Z6				EM 65				EM 1"3/8 Z6			
	LT	Z	L	Ød	LT	Z	L	Ød	LT	Z	L	Ød	LT	Z	L	Ød	LT	Z	L	Ød	LT	Z	L	Ød
50001	-				-				-				-				-				-			
50002	-				-				-				-				477.5	121.5	105	65	477.5	121.5	105	1"3/8
50003	491.5	64	50	28	491.5	64	82	42	521.5	94	82	42	521.5	94	106	1"3/8	549				549			
50004	552.5				552.5				582.5				582.5				-				-			

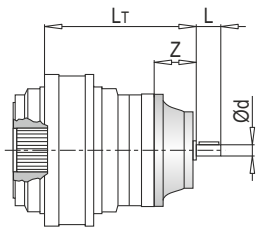

PL	EP 65				ET 90			
	LT	Z	L	Ød	LT	Z	L	Ød
50001	-				420.5	171.5	170	90
50002	509	153	105	65	527.5			
50003	590.5				-			
50004	-				-			

PL	~ Kg							
	EL C 28	EL C 42	EML 42	EML 1"3/8 Z6	EM 65	EM 1"3/8 Z6	EP 65	ET 90
50001	-	-	-	-	-	-	-	306.0
50002	-	-	-	-	336.0	336.0	345.0	367.0
50003	340.5	341.0	344.0	344.0	352.0	352.0	361.0	-
50004	348.5	349.0	352.0	352.0	-	-	-	-

PL 50000 F - Sonsuz Dişlili Redüktör Adaptörleri (PMRV/PRV) / Worm Gearbox Adaptors (PMRV/PRV) / Anschluss Für Schneckengetriebe (PMRV/PRV) / Predisposizioni Per Riduttori A Vite Senza Fine (PMRV/PRV) / Adaptation Pour Reducteurs A Vis Sans Fin (PMRV/PRV) / Acoplamiento Para Reductores De Tornillo Sin Fin (PMRV/PRV)

PL	PMRV/PRV 050					PMRV/PRV 063					PMRV/PRV 075				
	LM	l	h	MA	G	LM	l	h	MA	G	LM	l	h	MA	G
50002	-					-					-				
50003	549	50	110	60	80	558.5	63	135	72	95	537.5	75	161	86	112.5
50004	610					619.5					598.5				

PL	PMRV/PRV 090					PMRV/PRV 110					PMRV/PRV 130				
	LM	l	h	MA	G	LM	l	h	MA	G	LM	l	h	MA	G
50002	-					490	110	237.5	127.5	160	495.5	130	277.5	147.5	180
50003	547.5	90	193	103	129.5	561.5					567				
50004	608.5					-					-				

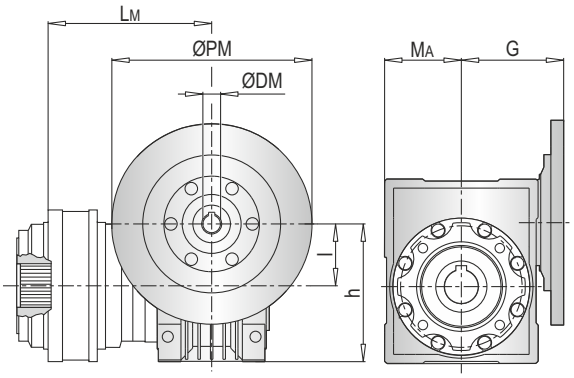

PL	PMRV/PRV 150				
	LM	l	h	MA	G
50002	512	150	320	170	210
50003	583.5				
50004	-				

PL	PMRV/PRV ~ Kg						
	050	063	075	090	110	130	150
50002	-	-	-	-	365	382	418
50003	343	346.5	349	354	381	398	434
50004	351	354.5	357	361	-	-	-

ØPM
ØDM
105

PLB 50000 F - Elektrik Motor Adaptörleri (IEC) / Electric Motor Couplings (IEC) /Anbauvorrichtung Für Elektromotore (IEC) / Predisposizioni Per Motori Elettrici (IEC) / Adaptations Pour Moteurs Electriques (IEC) /Acoplamientos Para Motores Eléctricos (IEC)

PLB	IEC 80				IEC 90				IEC 100				IEC 112			
	A	LT	Z	ØD	A	LT	Z	ØD	A	LT	Z	ØD	A	LT	Z	ØD
50002	-				-				-				-			
50003	444	296	56	200	444	296	56	200	444	306	66	250	444	306	66	250
50004	529				529				529				529			

PLB	IEC 132				IEC 160				IEC 180				IEC 200			
	A	LT	Z	ØD	A	LT	Z	ØD	A	LT	Z	ØD	A	LT	Z	ØD
50002	-				430	433	118	350	430	433	118	350	430	463	148	400
50003	444	340	100	300	444	358			444	358			-			
50004	529				529	379	139		-				-			

PLB	IEC ~ Kg							
	80	90	100	112	132	160	180	200
50002	-	-	-	-	-	332	332	342
50003	374	374	375	375	379	317	317	-
50004	382	382	383	383	387	397	-	-

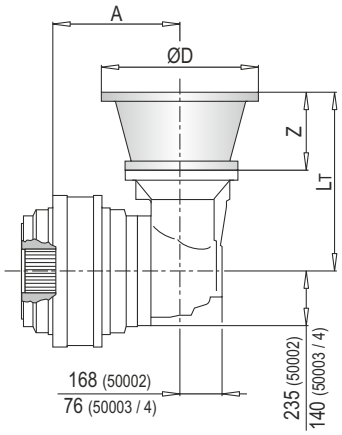

103

PLB 50000 F - Giriş Milleri / Input Shafts / Antriebswellen / Alberi Entrata / Arbres D'entree / Ejes De Entrada

PLB	EL C 28					EL C 42					EML 42					EML 1"3/8 Z6					EM 65				
	A	LT	Z	L	Ød	A	LT	Z	L	Ød	A	LT	Z	L	Ød	A	LT	Z	L	Ød	A	LT	Z	L	Ød
50002	-					-					-					-					430	436.5	121.5	105	1"3/8
50003	-					-					-					-					444	361.5			
50004	529	304	64	50	28	529	304	64	82	42	529	334	94	82	42	529	334	94	106	1"3/8	529				

PLB	EM 1"3/8 Z6					EP 65				
	A	LT	Z	L	Ød	A	LT	Z	L	Ød
50002	430	426.5	121.5	105	65	430	458	153	105	65
50003	444	361.5				444	383			
50004	529					529				

PLB	~ Kg						
	EL C 28	EL C 42	EML 42	EML 1"3/8 Z6	EM 65	EM 1"3/8 Z6	EP 65
50002	-	-	-	-	327.0	327.0	358.0
50003	-	-	-	-	312.0	312.0	343.0
50004	380.5	381.0	384.0	384.0	392.0	392.0	423.0

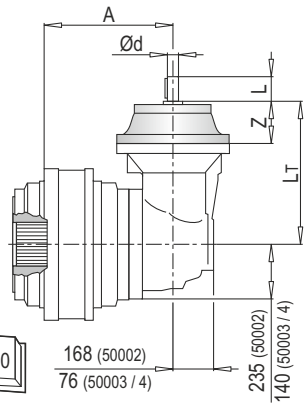

Ød 88-90

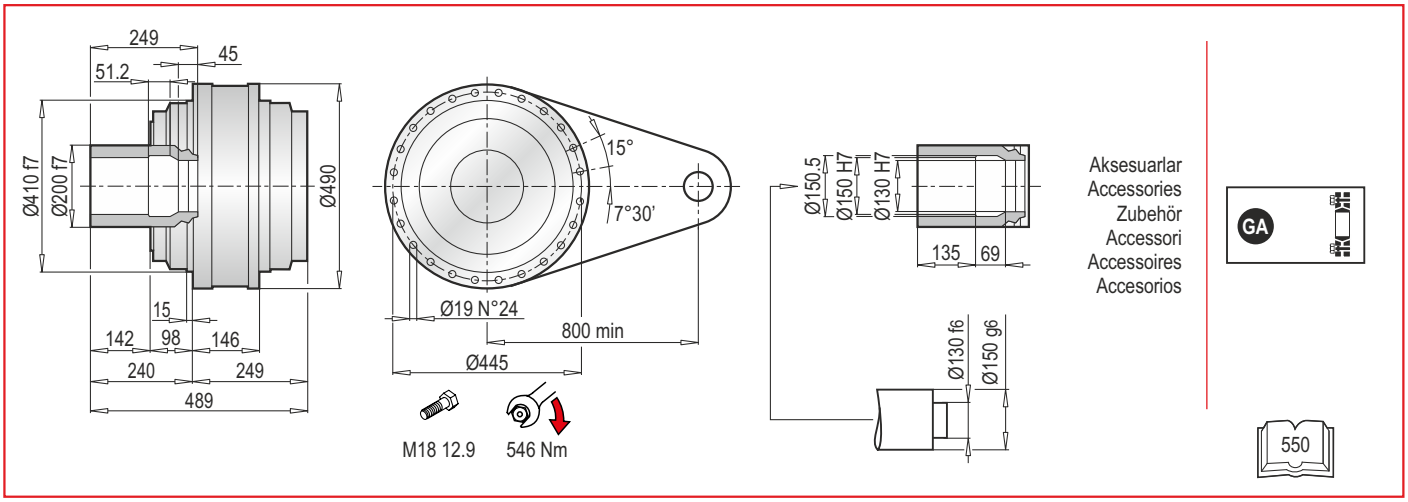

PL 50000 FS - Elektrik Motor Adaptörleri (IEC) / Electrıc Motor Couplings (IEC) /Anbauvorrichtung Für Elektromotore (IEC) / Predisposizioni Per Motori Elettrici (IEC) / Adaptations Pour Moteurs Electriques (IEC) /Acoplamientos Para Motores Eléctricos (IEC)

PL	IEC 63			IEC 71			IEC 80			IEC 90			IEC 100			IEC 112		
	LT	Z	ØD	LT	Z	ØD	LT	Z	ØD	LT	Z	ØD	LT	Z	ØD	LT	Z	ØD
50001	-			-			-			-			-			-		
50002	-			-			-			-			-			-		
50003	463.5	36	140	463.5	36	160	483.5	56	200	483.5	56	200	493.5	66	250	493.5	66	250
50004	524.5			524.5			544.5			544.5			554.5			554.5		

PL	IEC 132			IEC 160			IEC 180			IEC 200			IEC 225			IEC 250		
	LT	Z	ØD	LT	Z	ØD	LT	Z	ØD	LT	Z	ØD	LT	Z	ØD	LT	Z	ØD
50001	-			399	150	350	399	150	350	399	150	400	388	139	450	388	139	550
50002	-			474	118		474	118		504	148		-			-		
50003	527.5	100	300	566.5	139		566.5	139		-			-			-		
50004	588.5			627.5			627.5			-			-			-		

PL	IEC ~ Kg											
	63	71	80	90	100	112	132	160	180	200	225	250
50001	-	-	-	-	-	-	-	316	316	321	327	329
50002	-	-	-	-	-	-	-	354	354	364	-	-
50003	353	353	355	355	356	356	360	370	370	-	-	-
50004	361	361	363	363	364	364	368	378	378	-	-	-

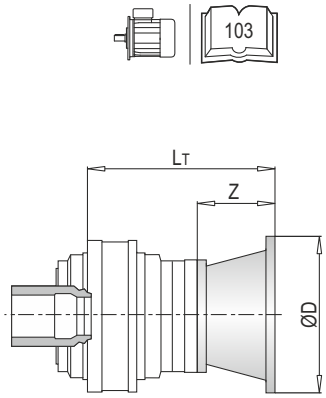

PL 50000 FS - Giriş Milleri / Input Shafts / Antriebswellen / Alberi Entrata / Arbres D'entree / Ejes De Entrada

PL	EL C 28				EL C 42				EML 42				EML 1"3/8 Z6				EM 65				EM 1"3/8 Z6			
	LT	Z	L	Ød	LT	Z	L	Ød	LT	Z	L	Ød	LT	Z	L	Ød	LT	Z	L	Ød	LT	Z	L	Ød
50001	-				-				-				-				-				-			
50002	-				-				-				-				477.5	121.5	105	65	477.5	121.5	105	1"3/8
50003	491.5	64	50	28	491.5	64	82	42	521.5	94	82	42	521.5	94	106	1"3/8	549				549			
50004	452.5				552.5				582.5				582.5				-				-			

PL	EP 65				ET 90			
	LT	Z	L	Ød	LT	Z	L	Ød
50001	-				420.5	171.5	170	90
50002	509	153	105	65	527.5			
50003	590.5				-			
50004	-				-			

PL	~ Kg							
	EL C 28	EL C 42	EML 42	EML 1"3/8 Z6	EM 65	EM 1"3/8 Z6	EP 65	ET 90
50001	-	-	-	-	-	-	-	306.0
50002	-	-	-	-	336.0	336.0	345.0	367.0
50003	340.5	341.0	344.0	344.0	352.0	352.0	361.0	-
50004	348.5	349.0	352.0	352.0	-	-	-	-

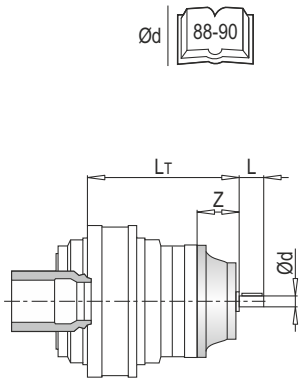

PL 50000 FS - Sonsuz Dişlili Redüktör Adaptörleri (PMRV/PRV) / Worm Gearbox Adaptors (PMRV/PRV) / Anschluss Für Schneckengetriebe (PMRV/PRV) / Predisposizioni Per Riduttori A Vite Senza Fine (PMRV/PRV) / Adaptation Pour Reducteurs A Vis Sans Fin (PMRV/PRV) / Acoplamiento Para Reductores De Tornillo Sin Fin (PMRV/PRV)

PL	PMRV/PRV 050					PMRV/PRV 063					PMRV/PRV 075				
	LM	l	h	MA	G	LM	l	h	MA	G	LM	l	h	MA	G
50002	-					-					-				
50003	549	50	110	60	89	558.5	63	135	72	95	537.5	75	161	86	112.5
50004	610					619.5					598.5				

PL	PMRV/PRV 090					PMRV/PRV 110					PMRV/PRV 130				
	LM	l	h	MA	G	LM	l	h	MA	G	LM	l	h	MA	G
50002	-					490	110	237.5	127.5	160	495.5	130	277.5	147.5	180
50003	547.5	90	193	103	129.5	561.5					567				
50004	608.5					-					-				

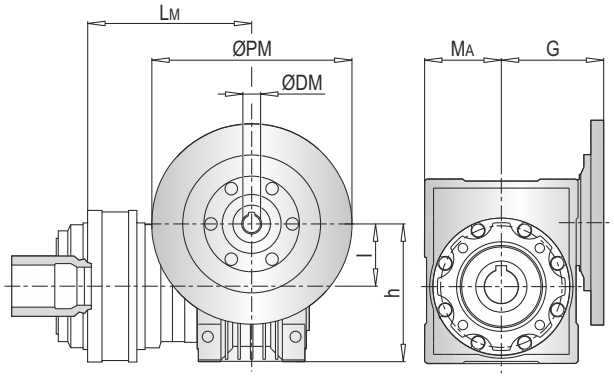

PL	PMRV/PRV 150				
	LM	l	h	MA	G
50002	512	150	320	170	210
50003	583.5				
50004	-				

PL	PMRV/PRV ~ Kg						
	050	063	075	090	110	130	150
50002	-	-	-	-	378	395	431
50003	356	359.5	362	367	394	411	447
50004	364	367.5	370	375	-	-	-

ØPM
ØDM
105

PLB 50000 FS - Elektrik Motor Adaptörleri (IEC) / Electric Motor Couplings (IEC) / Anbauvorrichtung Für Elektromotore (IEC) / Predisposizioni Per Motori Elettrici (IEC) / Adaptations Pour Moteurs Electriques (IEC) / Acoplamientos Para Motores Eléctricos (IEC)

PLB	IEC 80				IEC 90				IEC 100				IEC 112			
	A	LT	Z	ØD	A	LT	Z	ØD	A	LT	Z	ØD	A	LT	Z	ØD
50002	-				-				-				-			
50003	444	296	56	200	444	296	56	200	444	306	66	250	444	306	66	250
50004	529				529				529				529			

PLB	IEC 132				IEC 160				IEC 180				IEC 200			
	A	LT	Z	ØD	A	LT	Z	ØD	A	LT	Z	ØD	A	LT	Z	ØD
50002	-				430	433	118	350	430	433	118	350	430	463	148	400
50003	444	340	100	300	444	358			444	358			-			
50004	529				529	379	139		-				-			

PLB	IEC ~ Kg							
	80	90	100	112	132	160	180	200
50002	-	-	-	-	-	368	368	373
50003	317	317	318	318	322	332	332	342
50004	395	395	396	396	400	410	-	-

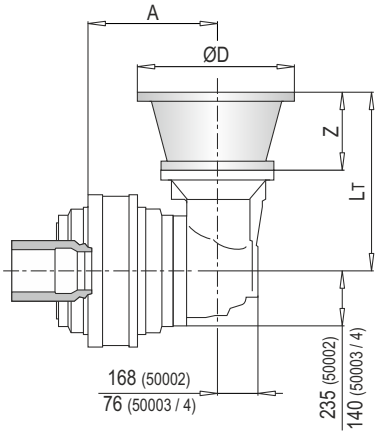

103

PLB 50000 FS - Giriş Milleri / Input Shafts / Antriebswellen / Alberi Entrata / Arbres D'entree / Ejes De Entrada

PLB	EL C 28					EL C 42					EML 42					EML 1"3/8 Z6					EM 65				
	A	LT	Z	L	Ød	A	LT	Z	L	Ød	A	LT	Z	L	Ød	A	LT	Z	L	Ød	A	LT	Z	L	Ød
50002	-					-					-					-					430	426.5	121.5	105	65
50003	-					-					-					-					444	361.5			
50004	529	304	64	50	28	529	304	64	82	42	529	334	94	82	42	529	334	94	106	1"3/8	529				

PLB	EM 1"3/8 Z6					EP 65				
	A	LT	Z	L	Ød	A	LT	Z	L	Ød
50002	430	436.5	121.5	105	1"3/8	430	458	153	105	65
50003	444	361.5				444	383			
50004	529					529				

PLB	~ Kg						
	EL C 28	EL C 42	EML 42	EML 1"3/8 Z6	EM 65	EM 1"3/8 Z6	EP 65
50002	-	-	-	-	340.0	340.0	349.0
50003	-	-	-	-	327.0	327.0	336.0
50004	393.5	394.0	397.0	397.0	405.0	405.0	414.0

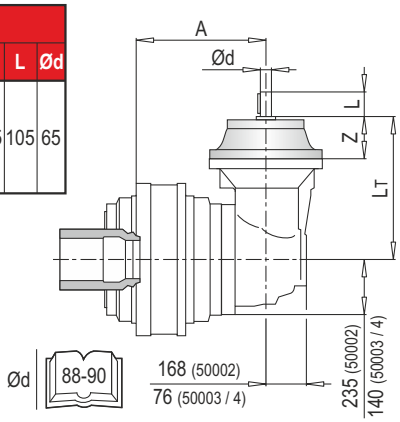

Ød 88-90

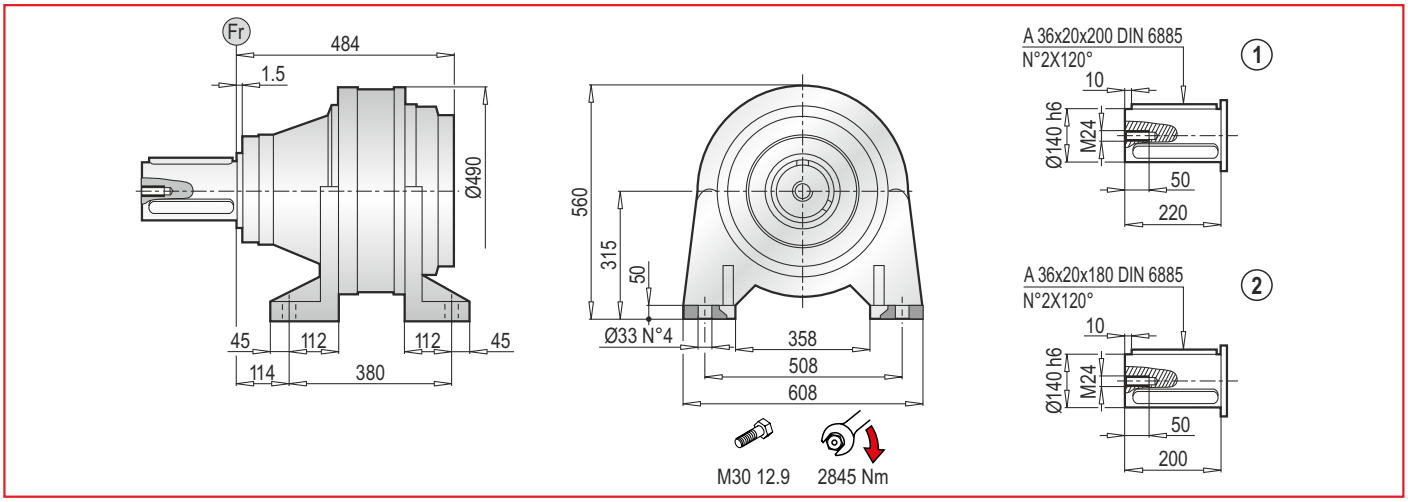

PL 50000 CPC - Elektrik Motor Adaptörleri (IEC) / Electrıc Motor Couplings (IEC) / Anbauvorrichtung Für Elektromotore (IEC) / Predisposizioni Per Motori Elettrici (IEC) / Adaptations Pour Moteurs Electriques (IEC) / Acoplamientos Para Motores Eléctricos (IEC)

PL	IEC 63			IEC 71			IEC 80			IEC 90			IEC 100			IEC 112		
	LT	Z	ØD	LT	Z	ØD	LT	Z	ØD	LT	Z	ØD	LT	Z	ØD	LT	Z	ØD
50001	-			-			-			-			-			-		
50002	-			-			-			-			-			-		
50003	699.5	36	140	699.5	36	160	719.5	56	200	719.5	56	200	729.5	66	250	729.5	66	250
50004	759.5			759.5			779.5			779.5			789.5			789.5		

PL	IEC 132			IEC 160			IEC 180			IEC 200			IEC 225			IEC 250		
	LT	Z	ØD	LT	Z	ØD	LT	Z	ØD	LT	Z	ØD	LT	Z	ØD	LT	Z	ØD
50001	-			635	150	350	635	150	350	635	150	400	624	139	450	624	139	550
50002	-			710	118		710	118		740	148		-			-		
50003	773.5	100	300	802.5	139		802.5	139		-			-			-		
50004	823.5			862.5			862.5			-			-			-		

PL	IEC ~ Kg											
	63	71	80	90	100	112	132	160	180	200	225	250
50001	-	-	-	-	-	-	-	467	467	472	478	490
50002	-	-	-	-	-	-	-	503	503	513	-	-
50003	502	502	504	504	505	505	509	519	519	-	-	-
50004	514	514	516	516	517	517	521	531	531	-	-	-

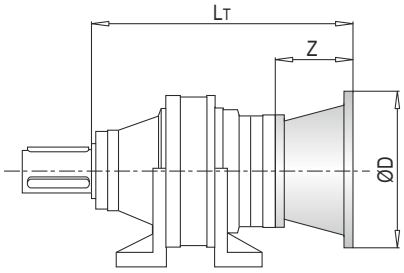

PL 50000 CPC - Giriş Milleri / Input Shafts / Antriebswellen / Alberi Entrata / Arbres D'entree / Ejes De Entrada

PL	EL C 28				EL C 42				EML 42				EML 1"3/8 Z6				EM 65				EM 1"3/8 Z6			
	LT	Z	L	Ød	LT	Z	L	Ød	LT	Z	L	Ød	LT	Z	L	Ød	LT	Z	L	Ød	LT	Z	L	Ød
50001	-				-				-				-				-				-			
50002	-				-				-				-				713.5	121.5	105	65	713.5	121.5	105	1"3/8
50003	727.5	64	50	28	727.5	64	82	42	757.5	94	82	42	757.5	94	106	1"3/8	785				785			
50004	787.5				787.5				817.5				817.5				-				-			

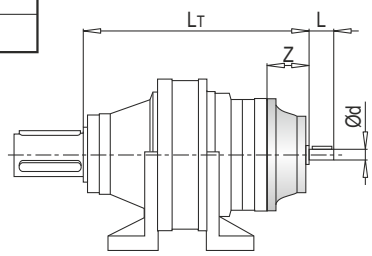

PL	EP 65				ET 90			
	LT	Z	L	Ød	LT	Z	L	Ød
50001	-				656.5	171.5	170	90
50002	745	153	105	65	763.5			
50003	816.5				-			
50004	-				-			

PL	~ Kg							
	EL C 28	EL C 42	EML 42	EML 1"3/8 Z6	EM 65	EM 1"3/8 Z6	EP 65	ET 90
50001	-	-	-	-	-	-	-	470.0
50002	-	-	-	-	498.0	498.0	507.0	529.0
50003	502.5	503.0	506.0	506.0	514	514.0	523.0	-
50004	514.5	515.0	518.0	518.0	-	-	-	-

PL 50000 CPC - Sonsuz Dişlili Redüktör Adaptörleri (PMRV/PRV) / Worm Gearbox Adaptors (PMRV/PRV) / Anschluss Für Schneckengetriebe (PMRV/PRV) / Predisposizioni Per Riduttori A Vite Senza Fine (PMRV/PRV) / Adaptation Pour Reducteurs A Vis Sans Fin (PMRV/PRV) / Acoplamiento Para Reductores De Tornillo Sin Fin (PMRV/PRV)

PL	PMRV/PRV 050					PMRV/PRV 063					PMRV/PRV 075				
	LM	l	h	MA	G	LM	l	h	MA	G	LM	l	h	MA	G
50002	-					-					-				
50003	785	50	110	60	80	794.5	63	135	72	95	773.5	75	161	86	112.5
50004	845					854.5					833.5				

PL	PMRV/PRV 090					PMRV/PRV 110					PMRV/PRV 130				
	LM	l	h	MA	G	LM	l	h	MA	G	LM	l	h	MA	G
50002	-					726	110	237.5	127.5	160	731.5	130	277.5	147.5	180
50003	783.5	90	193	103	129.5	797.5					803				
50004	843.5					-					-				

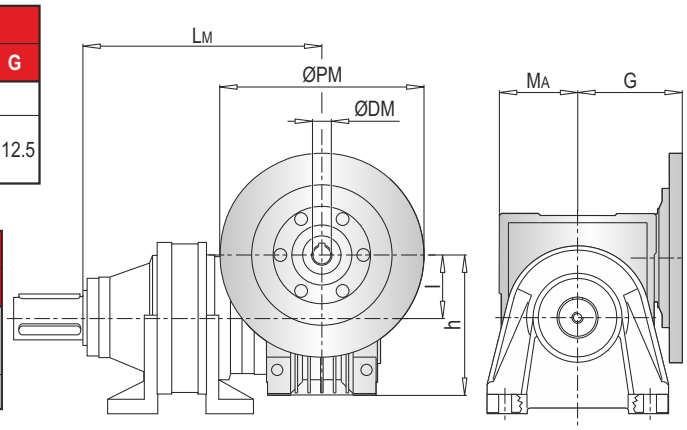

PL	PMRV/PRV 150				
	LM	l	h	MA	G
50002	748	150	320	170	210
50003	819.5				
50004	-				

PL	PMRV/PRV ~ Kg						
	050	063	075	090	110	130	150
50002	-	-	-	-	527	544	580
50003	505	508.5	511	516	543	560	596
50004	517	520.5	523	528	-	-	-

ØPM
ØDM
105

PLB 50000 CPC - Elektrik Motor Adaptörleri (IEC) / Electric Motor Couplings (IEC) / Anbauvorrichtung Für Elektromotore (IEC) / Predisposizioni Per Motori Elettrici (IEC) / Adaptations Pour Moteurs Electriques (IEC) / Acoplamientos Para Motores Eléctricos (IEC)

PLB	IEC 80				IEC 90				IEC 100				IEC 112			
	A	LT	Z	ØD	A	LT	Z	ØD	A	LT	Z	ØD	A	LT	Z	ØD
50002	-				-				-				-			
50003	682	296	56	200	682	296	56	200	682	306	66	250	682	306	66	250
50004	767				767				767				767			

PLB	IEC 132				IEC 160				IEC 180				IEC 200			
	A	LT	Z	ØD	A	LT	Z	ØD	A	LT	Z	ØD	A	LT	Z	ØD
50002	-				668	433	118	350	668	433	118	350	668	463	148	400
50003	682	340	100	300	682	358			682	358			-			
50004	767				767	379	139		-				-			

PLB	IEC ~ Kg							
	80	90	100	112	132	160	180	200
50002	-	-	-	-	-	517	517	522
50003	529	529	530	530	535	544	544	-
50004	548	548	549	549	554	563	-	-

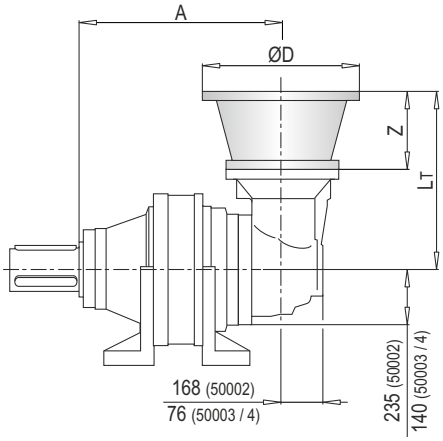

103

PLB 50000 CPC - Giriş Milleri / Input Shafts / Antriebswellen / Alberi Entrata / Arbres D'entree / Ejes De Entrada

PLB	EL C 28					EL C 42					EML 42					EML 1"3/8 Z6					EM 65				
	A	LT	Z	L	Ød	A	LT	Z	L	Ød	A	LT	Z	L	Ød	A	LT	Z	L	Ød	A	LT	Z	L	Ød
50002	-					-					-					-					668	436.5	121.5	105	65
50003	-					-					-					-					682	361.5			
50004	767	304	64	50	28	767	304	64	82	42	767	334	94	82	42	767	334	94	106	1"3/8	767				

PLB	EM 1"3/8 Z6					EP 65				
	A	LT	Z	L	Ød	A	LT	Z	L	Ød
50002	668	436.5	121.5	105	1"3/8	668	468	153	105	65
50003	682	361.5				682	393			
50004	767					767				

PLB	~ Kg						
	EL C 28	EL C 42	EML 42	EML 1"3/8 Z6	EM 65	EM 1"3/8 Z6	EP 65
50002	-	-	-	-	489	489	498
50003	-	-	-	-	539	539	548
50004	546.5	547	550	550	558	558	567

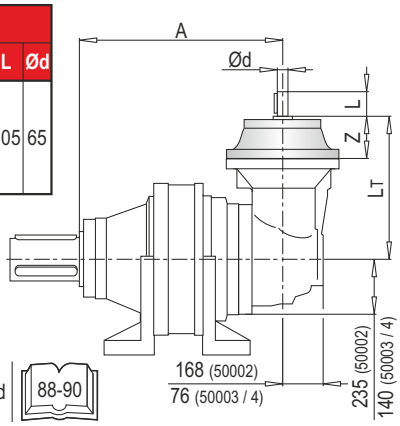

Ød
88-90

AKSESUARLAR / ACCESSORIES / ZUBEHÖR / ACCESSORI / ACCESSOIRES / ACCESORIOS

BS
Spline kaplin / Splined bushing / Innenverzahnte Buchse
Boccola scanalata / Moyeu cannelé / Casquillo ranurado

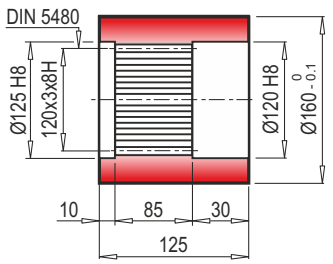

Malzeme / Material
Material / Materiale
Matière / Material
UNI C40
SAE 1040
DIN Ck40

Kod / Code
Bestell - Nr. / Codice
Code / Código
9171.104.076

KB
Spline mil / Splined rod / Außenverzahnte Welle
Barra scanalata / Arbre cannelé / Barra ranurada

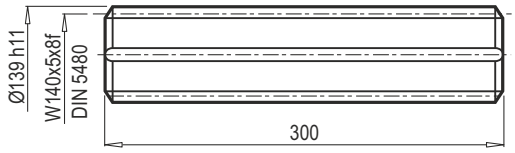

Malzeme / Material
Material / Materiale
Matière / Material

UNI 16CrNi4
Sertleşmiş ve tavlanmış / Hardened and tempered
Vergütet / Bonifié
Bonificado / Endurecido e temperado

Kod / Code
Bestell - Nr. / Codice
Code / Código
3071.564.042

FL
Flanş / Flange / Flansch
Flangia / Bride / Brida

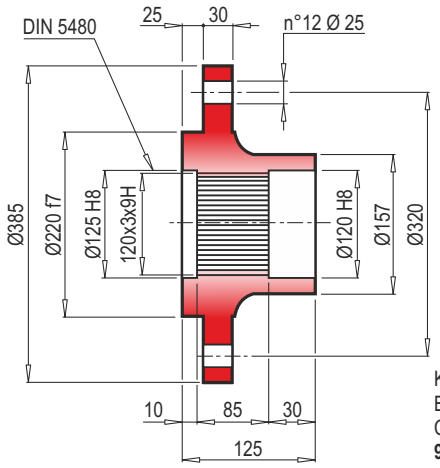

Kod / Code
Bestell - Nr. / Codice
Code / Código
9171.103.098

GA
Konik sıktırma / Shrink disc / Schrumpfscheibe
Giunto di attrito / Frette de serrage / Disco de contracción

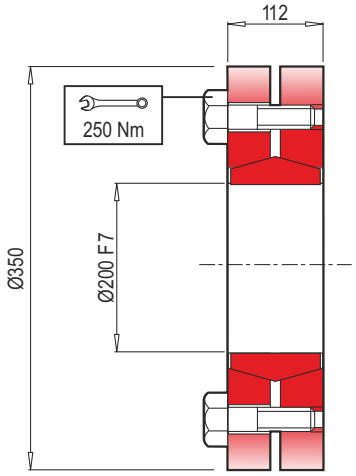

Maksimum moment
Max. torque
Max. Drehmoment
Coppia max.
Couple max.
Momento máx.
92,5 kNm

Kod / Code
Bestell - Nr. / Codice
Code / Código
5109.200.000

FF
Sabitleme rondelası / Stop bottom plate / Endscheibe
Fondello di arresto / Bouchon de fermeture / Tapón de detención

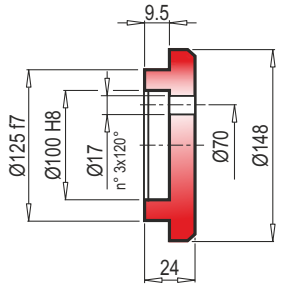

Kod / Code
Bestell - Nr. / Codice
Code / Código
1075.005.000

TR RADYAL YÜKLER (Fr)

Aşağıdaki grafikler istenilen $n_2$xh değerinin elde edilmesi için gerekli olan radyal yükleri ve K faktörlerini göstermektedir.

EN RADIAL LOADS (Fr)

The following curves show the radial loads and the K factors to obtain the required n2xh value.

DE RADIALLAST (Fr)

In den nachstehenden Diagrammen ist die Radiallast un der Koeffizient K dargestellt und kann mit dem gewünschten Wert $n_2$xh verglichen werden.

IT CARICHI RADIALI (Fr)

Nei diagrammi seguenti sono riportati i carichi radiali e i coefficienti K per rapportarli al valore $n_2$xh desiderato.

FR CHARGES RADIALES (Fr)

Dans les diagrammes suivants sont indiqués les charges radiales et les facteurs K de façon à obtenir la valeur $n_2$xh désirée.

ES CARGAS RADIALES (Fr)

En los siguientes diagramas se indican las cargas radiales y los coefici - entes K para obtener el valor requerido $n_2$xh.

M - CPC*

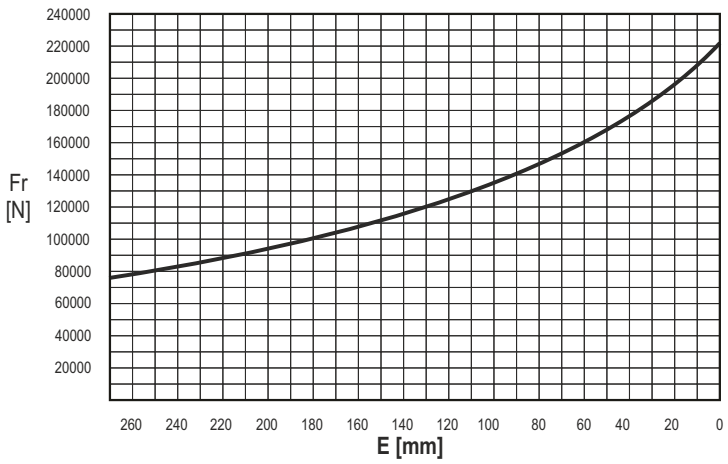

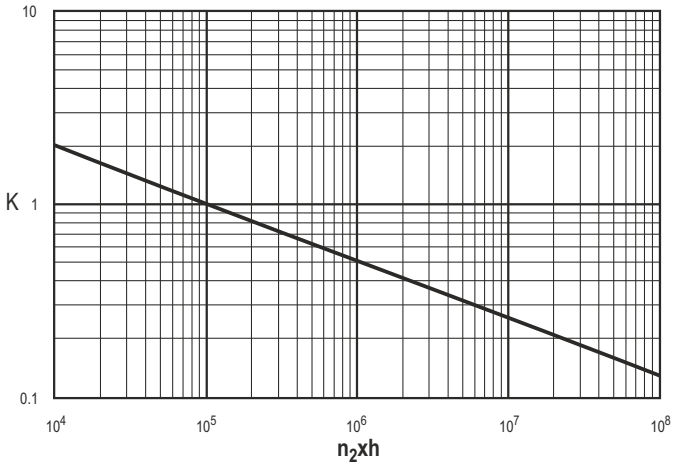

	n x h				
	10^5	10^4	10^6	10^7	10^8
M	Fr	Fr • K			
CPC*	Fr • 0.75	Fr • K • 0.75			

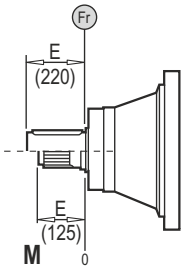

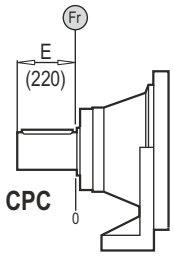

TR EKSENEL YÜKLER (Fa)

Tabloda yer alan eksenel yük değerleri, çıkış tipine ve uygulamanın yük yönüne göre değişir.

EN AXIAL LOADS (Fa)

The values of the axial loads in the table refer to the output versions and load direction of application.

DE AXIALLAST (Fa)

Die dargestellten Werte der Axiallast basieren auf der Version und der applizierten Lastrichtung.

IT CARICHI ASSIALI (Fa)

I valori dei carichi assiali indicati in tabella sono riferiti alle versioni e alla direzione di applicazione del carico.

FR CHARGES AXIALES (Fa)

Les valeurs des charges axiales indiquées dans le tableau se réfèrent aux versions et à la direction d'application de lacharge.

ES CARGAS AXIALES (Fa)

Los valores de las cargas axiales indicados en la tabla se refieren a las versiones y a la dirección de aplicación de la carga.

Fa [N]	M	CPC	
	80000	80000	←
	120000	120000	→

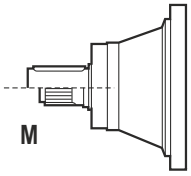

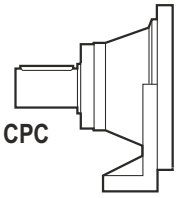

TEKNİK VERİLER / TECHNICAL DATA / TECHNISCHE DATEN / DATI TECNICI / DONNÉES TECHNIQUES / DATOS TÉCNICAS

	i_{ges}	M_2max (n1: 1400rpm) (Nm)
65001	3.84	29340
65002	15.3 ... 24.0	39950
65003	56.3 ... 167.8	56210
65004	212.5 ... 1008.1	76360

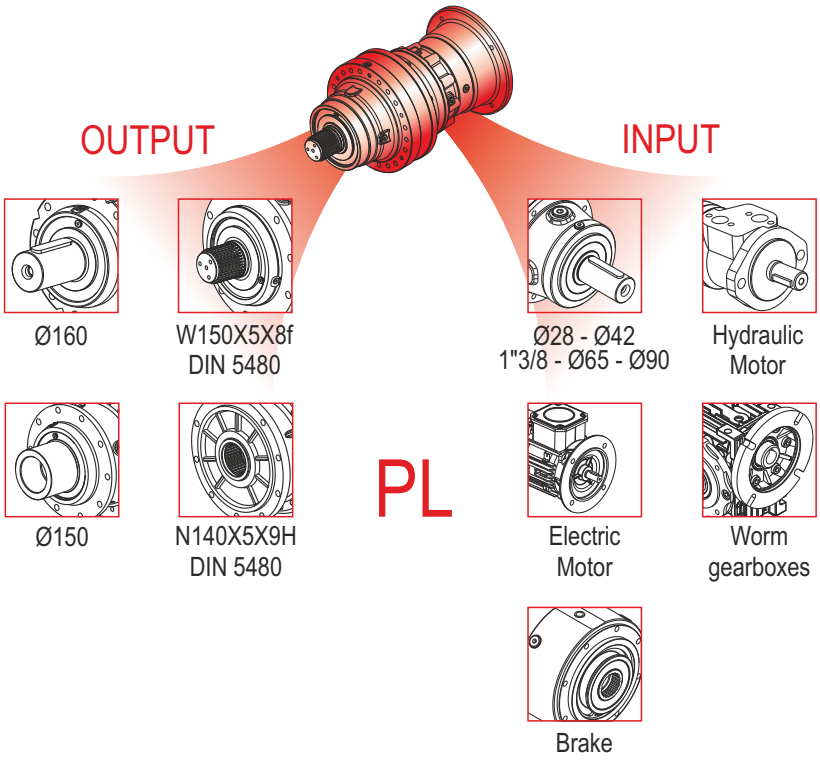

	i_{ges}	M_2max (n1: 1400rpm) (Nm)
65003	47.1 ... 111.9	52670
65004	194.4 ... 913.7	75300

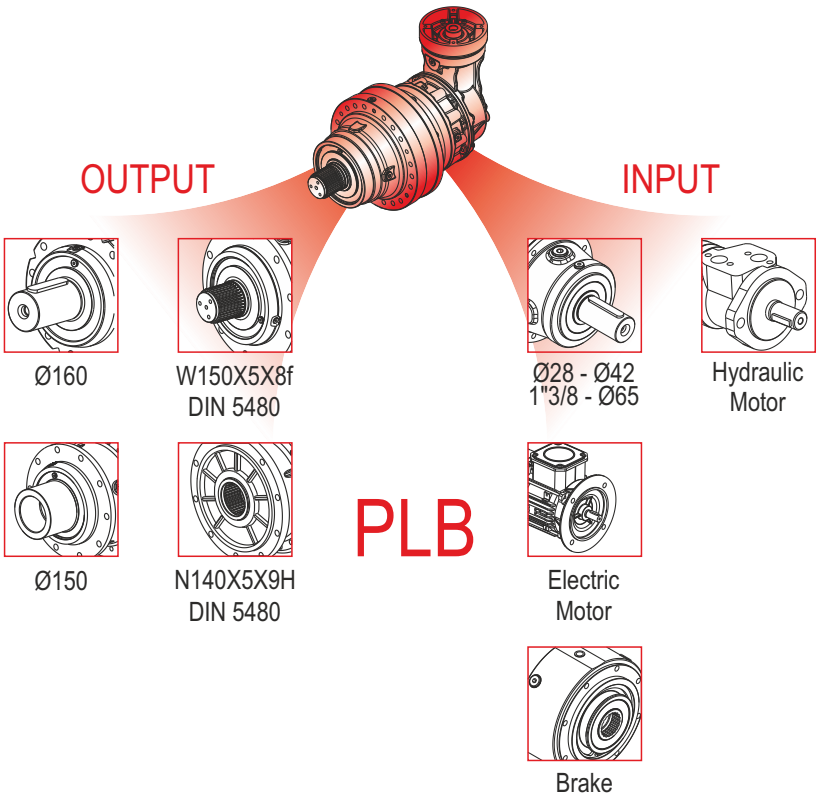

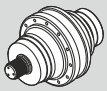	Pt [kW]	n_{1max} [min^{-1}]	i_{ges}	Mc [kNm]				Giriş- Input - Antrieb - Entrata - Entrée - Entrada		
				n_2 x h	n_2 x h	n_2 x h	n_2 x h			
				10.000	20.000	50.000	100.000	IEC (B5)	PMRV / PRV	EL - EML EM - EP - ET
PL 65001	60	1000	3.84	79.88	70.70	60.16	53.25	160 180 200 225 250	-	-
PL 65002	50	1500	15.3 19.9 24.0	79.88 79.88 79.88	70.70 70.70 70.70	60.16 60.16 60.16	53.25 53.25 53.25	160 180 200 225 250	-	ET 90
PL 65003	35	2500	56.3 68.0 73.1 88.3 99.7 115.7 139.1 167.8	79.88 79.88 79.88 79.88 79.88 79.88 79.88 79.88	70.70 70.70 70.70 70.70 70.70 70.70 70.70 70.70	60.16 60.16 60.16 60.16 60.16 60.16 60.16 60.16	53.25 53.25 53.25 53.25 53.25 53.25 53.25 53.25	160 180 200	110 130 150	EM 65 EM 1"3/8 Z6 EP 65
PL 65004	25	2800	212.5 256.7 280.3 301.7 333.7 364.4 407.7 456.4 515.3 556.2 640.4 694.2 838.8 1008.1	79.88 79.88 79.88 79.88 79.88 79.88 79.88 79.88 79.88 79.88 79.88 79.88 79.88 79.88	70.70 70.70 70.70 70.70 70.70 70.70 70.70 70.70 70.70 70.70 70.70 70.70 70.70 70.70	60.16 60.16 60.16 60.16 60.16 60.16 60.16 60.16 60.16 60.16 60.16 60.16 60.16 60.16	53.25 53.25 53.25 53.25 53.25 53.25 53.25 53.25 53.25 53.25 53.25 53.25 53.25 53.25	63 71 80 90 100 112 132 160 180	050 063 075 090 110 130 150	EL C 28 EL C 42 EML 42 EML 1"3/8 Z6 EM 65 EM 1"3/8 Z6 EP 65

	Pt [kW]	n_{1max} [min^{-1}]	i_{ges}	Mc [kNm]				Giriş- Input - Antrieb - Entrata - Entrée - Entrada	
				n_2 x h	n_2 x h	n_2 x h	n_2 x h		
				10.000	20.000	50.000	100.000	IEC (B5)	EL - EML EM - EP - ET
PLB 65003	35	2500	47.1 61.3 71.6 93.1 111.9	79.88 79.88 79.88 79.88 79.88	70.70 70.70 70.70 70.70 70.70	60.16 60.16 60.16 60.16 60.16	53.25 53.25 53.25 53.25 53.25	160 180 200	EM 65 EM 1"3/8 Z6 EP 65
PLB 65004	25	2800	194.4 234.7 252.7 265.0 305.2 344.5 399.7 417.7 484.5 578.0 629.9 757.1 913.7	79.88 79.88 79.88 79.88 79.88 79.88 79.88 79.88 79.88 79.88 79.88 79.88 79.88	70.70 70.70 70.70 70.70 70.70 70.70 70.70 70.70 70.70 70.70 70.70 70.70 70.70	60.16 60.16 60.16 60.16 60.16 60.16 60.16 60.16 60.16 60.16 60.16 60.16 60.16	53.25 53.25 53.25 53.25 53.25 53.25 53.25 53.25 53.25 53.25 53.25 53.25 53.25	80 90 100 112 132 160 180	EL C 28 EL C 42 EML 42 EML 1"3/8 Z6 EM 65 EM 1"3/8 Z6 EP 65

(n_2 x h = 20.000)

$$M_{max} = M_C \times 2$$

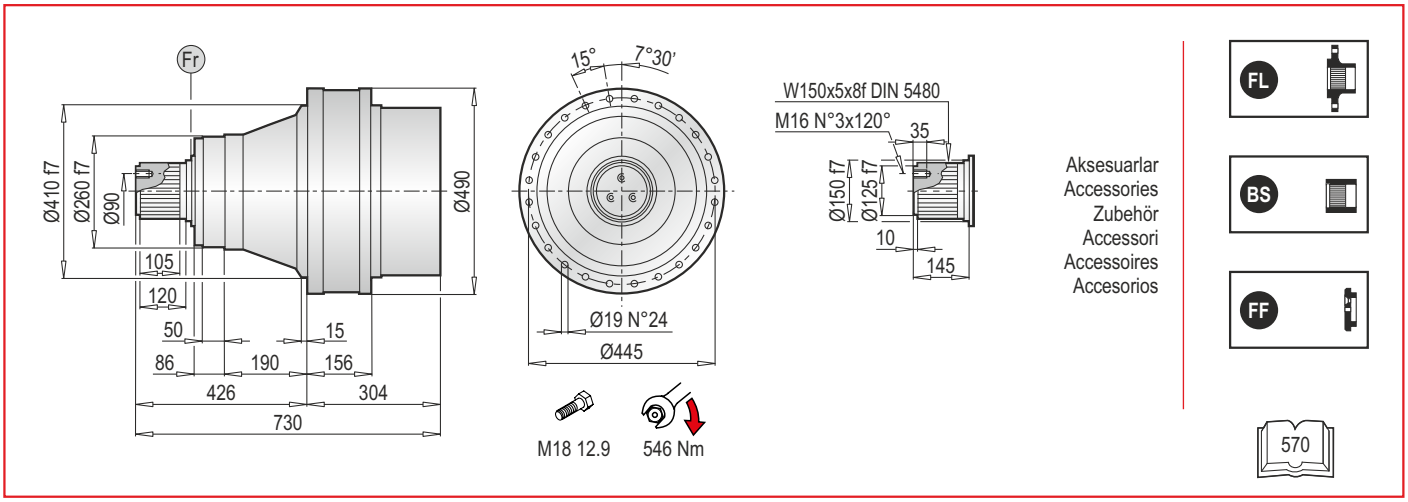

PL 65000 MS - Elektrik Motor Adaptörleri (IEC) / Electric Motor Couplings (IEC) / Anbauvorrichtung Für Elektromotore (IEC) / Predisposizioni Per Motori Elettrici (IEC) / Adaptations Pour Moteurs Electriques (IEC) / Acoplamientos Para Motores Eléctricos (IEC)

PL	IEC 63			IEC 71			IEC 80			IEC 90			IEC 100			IEC 112		
	LT	Z	ØD	LT	Z	ØD	LT	Z	ØD	LT	Z	ØD	LT	Z	ØD	LT	Z	ØD
65001	-			-			-			-			-			-		
65002	-			-			-			-			-			-		
65003	-			-			-			-			-			-		
65004	675.5	36	140	675.5	36	160	695.5	56	200	695.5	56	200	705.5	66	250	705.5	66	250

PL	IEC 132			IEC 160			IEC 180			IEC 200			IEC 225			IEC 250		
	LT	Z	ØD	LT	Z	ØD	LT	Z	ØD	LT	Z	ØD	LT	Z	ØD	LT	Z	ØD
65001	-			454	150	350	454	150	350	454	150	400	443	139	450	443	139	550
65002	-			651			651			651			640			640		
65003	-			698	118		698	118		728	148		719			-	-	-
65004	739.5	100	300	757.5			757.5			-	-	-	-	-	-	-	-	-

PL	IEC ~ Kg											
	63	71	80	90	100	112	132	160	180	200	225	250
65001	-	-	-	-	-	-	-	383	383	388	394	406
65002	-	-	-	-	-	-	-	476	476	486	491	532
65003	-	-	-	-	-	-	-	503	503	513	518	-
65004	498	498	500	500	501	501	505	515	515	-	-	-

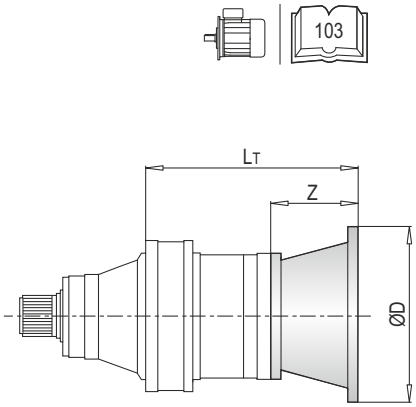

PL 65000 MS - Giriş Milleri / Input Shafts / Antriebswellen / Alberi Entrata / Arbres D'entree / Ejes De Entrada

PL	EL C 28				EL C 42				EML 42				EML 1"3/8 Z6				EM 65				EM 1"3/8 Z6			
	LT	Z	L	Ød	LT	Z	L	Ød	LT	Z	L	Ød	LT	Z	L	Ød	LT	Z	L	Ød	LT	Z	L	Ød
65002	-				-				-				-				-				-			
65003	-				-				-				-				701.5	121.5	105	65	701.5	121.5	105	1"3/8
65004	703.5	64	50	28	703.5	64	82	42	733.5	94	82	42	733.5	94	106	1"3/8	761				761			

PL	EP 65				ET 90			
	LT	Z	L	Ød	LT	Z	L	Ød
65002	-				475.5	171.5	170	90
65003	733	153	105	65	-			
65004	792.5				-			

PL	~ Kg							
	EL C 28	EL C 42	EML 42	EML 1"3/8 Z6	EM 65	EM 1"3/8 Z6	EP 65	ET 90
65002	-	-	-	-	-	-	-	502
65003	-	-	-	-	498	498	507	-
65004	498.5	499	502	502	510	510	519	-

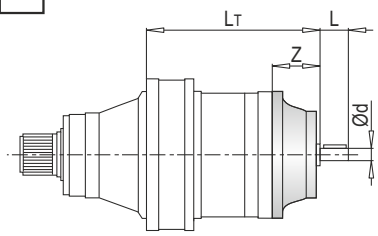

PL 65000 MS - Sonsuz Dişlili Redüktör Adaptörleri (PMRV/PRV) / Worm Gearbox Adaptors (PMRV/PRV) / Anschluss Für Schneckengetriebe (PMRV/PRV) / Predisposizioni Per Riduttori A Vite Senza Fine (PMRV/PRV) / Adaptation Pour Reducteurs A Vis Sans Fin (PMRV/PRV) / Acoplamiento Para Reductores De Tornillo Sin Fin (PMRV/PRV)

PL	PMRV/PRV 050					PMRV/PRV 063					PMRV/PRV 075				
	LM	l	h	MA	G	LM	l	h	MA	G	LM	l	h	MA	G
65003	-					-					-				
65004	761	50	110	60	80	770.5	63	135	72	95	749.5	75	161	86	112.5

PL	PMRV/PRV 090					PMRV/PRV 110					PMRV/PRV 130				
	LM	l	h	MA	G	LM	l	h	MA	G	LM	l	h	MA	G
65003	-					714	110	237.5	127.5	160	719.5	130	277.5	147.5	180
65004	759.5	90	193	103	129.5	773.5					779				

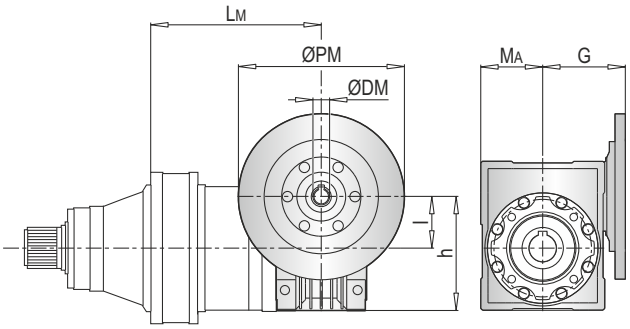

PL	PMRV/PRV 150				
	LM	l	h	MA	G
65003	736	150	320	170	210
65004	770.5				

PL	PMRV/PRV ~ Kg						
	050	063	075	090	110	130	150
65003	-	-	-	-	527	544	580
65004	501	504.5	507	512	539	556	592

ØPM
ØDM
105

PLB 65000 MS - Elektrik Motor Adaptörleri (IEC) / Electric Motor Couplings (IEC) / Anbauvorrichtung Für Elektromotore (IEC) / Predisposizioni Per Motori Elettrici (IEC) / Adaptations Pour Moteurs Electriques (IEC) / Acoplamientos Para Motores Eléctricos (IEC)

PLB	IEC 80				IEC 90				IEC 100				IEC 112			
	A	LT	Z	ØD	A	LT	Z	ØD	A	LT	Z	ØD	A	LT	Z	ØD
65003	-				-				-				-			
65004	668	296	56	200	668	296	56	200	668	306	66	250	668	306	66	250

PLB	IEC 132				IEC 160				IEC 180				IEC 200			
	A	LT	Z	ØD	A	LT	Z	ØD	A	LT	Z	ØD	A	LT	Z	ØD
65003	-				566	433	118	350	566	433	118	350	566	463	148	400
65004	668	340	100	300	668	379	139		668	379	139		-			

PLB	IEC ~ Kg							
	80	90	100	112	132	160	180	200
65003	-	-	-	-	-	569	569	579
65004	529	529	530	530	534	544	544	-

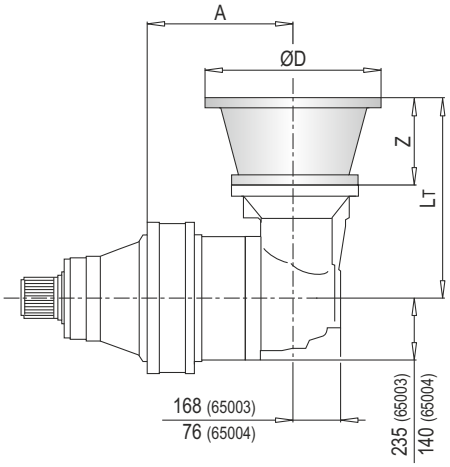

103

PLB 65000 MS - Giriş Milleri / Input Shafts / Antriebswellen / Alberi Entrata / Arbres D'entree / Ejes De Entrada

PLB	EL C 28					EL C 42					EML 42					EML 1"3/8 Z6					EM 65				
	A	LT	Z	L	Ød	A	LT	Z	L	Ød	A	LT	Z	L	Ød	A	LT	Z	L	Ød	A	LT	Z	L	Ød
65003	-					-					-					-					566	436.5	121.5	105	65
65004	668	304	64	50	28	668	304	64	82	42	668	334	94	82	42	668	334	94	106	1"3/8	668	361.5			

PLB	EM 1"3/8 Z6					EP 65				
	A	LT	Z	L	Ød	A	LT	Z	L	Ød
65003	566	436.5	121.5	105	1"3/8	566	468	153	105	65
65004	668	361.5				668	393			

PLB	~ Kg						
	EL C 28	EL C 42	EML 42	EML 1"3/8 Z6	EM 65	EM 1"3/8 Z6	EP 65
65003	-	-	-	-	498	498	507
65004	498.5	499	502	502	510	510	519

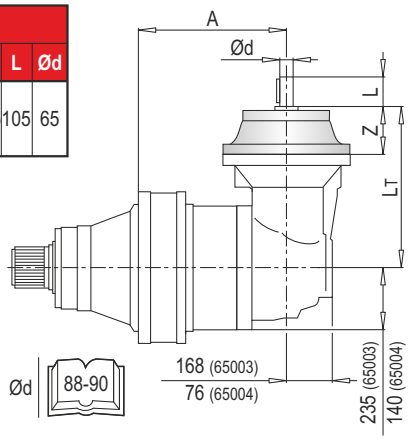

Ød 88-90

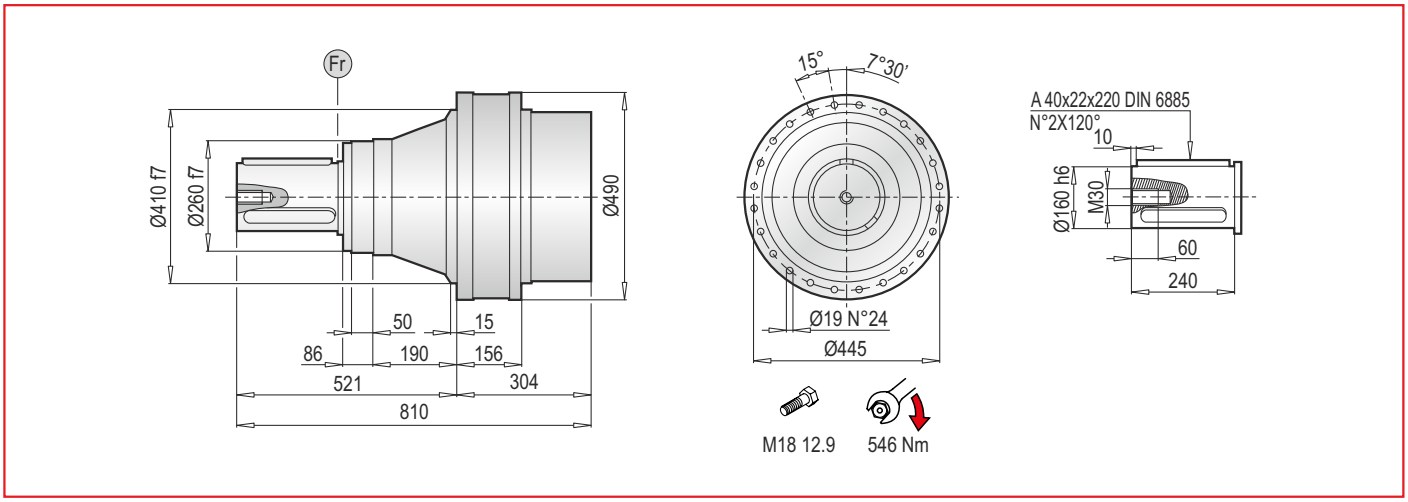

PL 65000 MC - Elektrik Motor Adaptörleri (IEC) / Electric Motor Couplings (IEC) / Anbauvorrichtung Für Elektromotore (IEC) / Predisposizioni Per Motori Elettrici (IEC) / Adaptations Pour Moteurs Electriques (IEC) / Acoplamientos Para Motores Eléctricos (IEC)

PL	IEC 63			IEC 71			IEC 80			IEC 90			IEC 100			IEC 112		
	LT	Z	ØD	LT	Z	ØD	LT	Z	ØD	LT	Z	ØD	LT	Z	ØD	LT	Z	ØD
65001	-			-			-			-			-			-		
65002	-			-			-			-			-			-		
65003	-			-			-			-			-			-		
65004	675.5	36	140	675.5	36	160	695.5	56	200	695.5	56	200	705.5	66	250	705.5	66	250

PL	IEC 132			IEC 160			IEC 180			IEC 200			IEC 225			IEC 250		
	LT	Z	ØD	LT	Z	ØD	LT	Z	ØD	LT	Z	ØD	LT	Z	ØD	LT	Z	ØD
65001	-			454	150	350	454	150	350	454	150	400	443	139	450	443	139	550
65002	-			651			651			651			640			640		
65003	-			698	118		698	118		728	148		719			-		
65004	739.5	100	300	757.5			757.5			-			-			-		

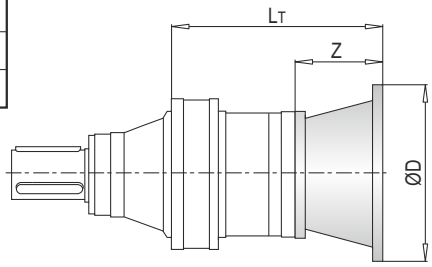

PL	IEC ~ Kg											
	63	71	80	90	100	112	132	160	180	200	225	250
65001	-	-	-	-	-	-	-	383	383	388	394	406
65002	-	-	-	-	-	-	-	476	476	486	491	532
65003	-	-	-	-	-	-	-	503	503	513	518	-
65004	498	498	500	500	501	501	505	515	515	-	-	-

PL 65000 MC - Giriş Milleri / Input Shafts / Antriebswellen / Alberi Entrata / Arbres D'entree / Ejes De Entrada

PL	EL C 28				EL C 42				EML 42				EML 1"3/8 Z6				EM 65				EM 1"3/8 Z6			
	LT	Z	L	Ød	LT	Z	L	Ød	LT	Z	L	Ød	LT	Z	L	Ød	LT	Z	L	Ød	LT	Z	L	Ød
65002	-				-				-				-				-				-			
65003	-				-				-				-				701.5	121.5	105	65	701.5	121.5	105	1"3/8
65004	703.5	64	50	28	703.5	64	82	42	733.5	94	82	42	733.5	94	106	1"3/8	761				761			

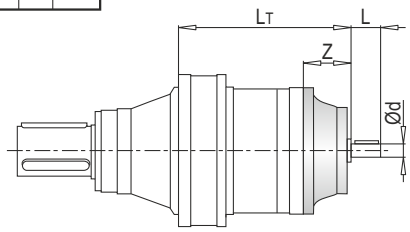

PL	EP 65				ET 90			
	LT	Z	L	Ød	LT	Z	L	Ød
65002	-				475.5	171.5	170	90
65003	733	153	105	65	-			
65004	792.5				-			

PL	~ Kg							
	EL C 28	EL C 42	EML 42	EML 1"3/8 Z6	EM 65	EM 1"3/8 Z6	EP 65	ET 90
65002	-	-	-	-	-	-	-	502
65003	-	-	-	-	498	498	507	-
65004	498.5	499	502	502	510	510	519	-

PL 65000 MC - Sonsuz Dişlili Redüktör Adaptörleri (PMRV/PRV) / Worm Gearbox Adaptors (PMRV/PRV) / Anschluss Für Schneckengetriebe (PMRV/PRV) / Predisposizioni Per Riduttori A Vite Senza Fine (PMRV/PRV) / Adaptation Pour Reducteurs A Vis Sans Fin (PMRV/PRV) / Acoplamiento Para Reductores De Tornillo Sin Fin (PMRV/PRV)

PL	PMRV/PRV 050					PMRV/PRV 063					PMRV/PRV 075				
	LM	l	h	MA	G	LM	l	h	MA	G	LM	l	h	MA	G
65003	-					-					-				
65004	761	50	110	60	80	770.5	63	135	72	95	749.5	75	161	86	112.5

PL	PMRV/PRV 090					PMRV/PRV 110					PMRV/PRV 130				
	LM	l	h	MA	G	LM	l	h	MA	G	LM	l	h	MA	G
65003	-					714	110	237.5	127.5	160	719.5	130	277.5	147.5	180
65004	759.5	90	193	103	129.5	773.5					779				

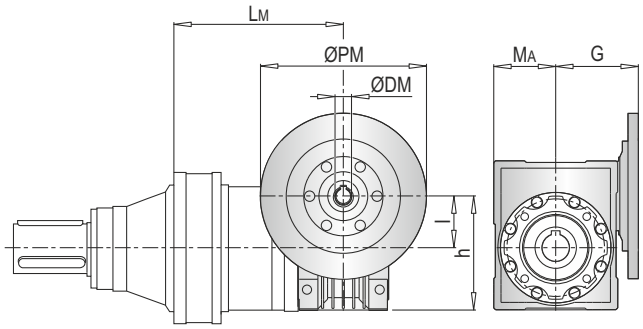

PL	PMRV/PRV 150				
	LM	l	h	MA	G
65003	736	150	320	170	210
65004	770.5				

PL	PMRV/PRV ~ Kg						
	050	063	075	090	110	130	150
65003	-	-	-	-	527	544	580
65004	501	504.5	507	512	539	556	592

ØPM
ØDM
105

PLB 65000 MC - Elektrik Motor Adaptörleri (IEC) / Electric Motor Couplings (IEC) / Anbauvorrichtung Für Elektromotore (IEC) / Predisposizioni Per Motori Elettrici (IEC) / Adaptations Pour Moteurs Electriques (IEC) / Acoplamientos Para Motores Eléctricos (IEC)

PLB	IEC 80				IEC 90				IEC 100				IEC 112			
	A	LT	Z	ØD	A	LT	Z	ØD	A	LT	Z	ØD	A	LT	Z	ØD
65003	-				-				-				-			
65004	668	296	56	200	668	296	56	200	668	306	66	250	668	306	66	250

PLB	IEC 132				IEC 160				IEC 180				IEC 200			
	A	LT	Z	ØD	A	LT	Z	ØD	A	LT	Z	ØD	A	LT	Z	ØD
65003	-				566	433	118	350	566	433	118	350	566	463	148	400
65004	668	340	100	300	668	379	139		668	379	139		-			

PLB	IEC ~ Kg							
	80	90	100	112	132	160	180	200
65003	-	-	-	-	-	569	569	579
65004	529	529	530	530	534	544	544	-

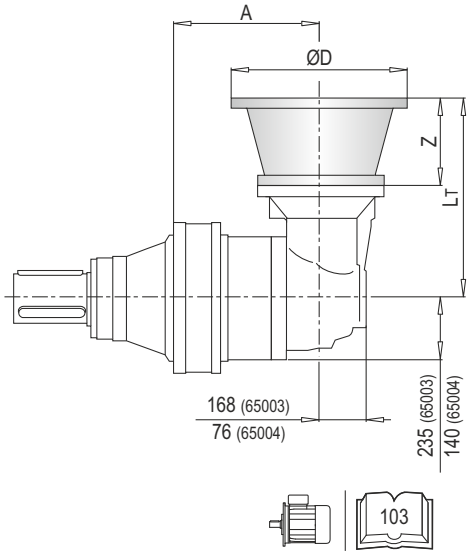

PLB 65000 MC - Giriş Milleri / Input Shafts / Antriebswellen / Alberi Entrata / Arbres D'entree / Ejes De Entrada

PLB	EL C 28					EL C 42					EML 42					EML 1"3/8 Z6					EM 65				
	A	LT	Z	L	Ød	A	LT	Z	L	Ød	A	LT	Z	L	Ød	A	LT	Z	L	Ød	A	LT	Z	L	Ød
65003	-					-					-					-					566	436.5	121.5	105	65
65004	668	304	64	50	28	668	304	64	82	42	668	334	94	82	42	668	334	94	106	1"3/8	668	361.5			

PLB	EM 1"3/8 Z6					EP 65				
	A	LT	Z	L	Ød	A	LT	Z	L	Ød
65003	566	436.5	121.5	105	1"3/8	566	468	153	105	65
65004	668	361.5				668	393			

PLB	~ Kg						
	EL C 28	EL C 42	EML 42	EML 1"3/8 Z6	EM 65	EM 1"3/8 Z6	EP 65
65003	-	-	-	-	-	498	507
65004	498.5	499	502	502	510	510	519

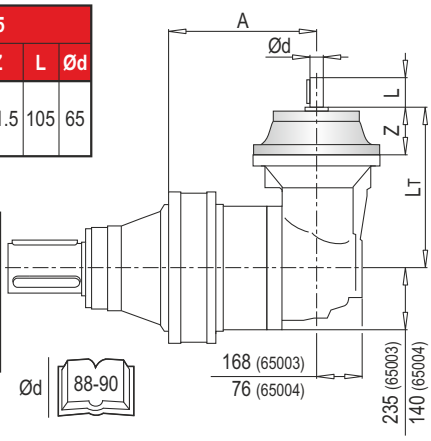

Ød 88-90

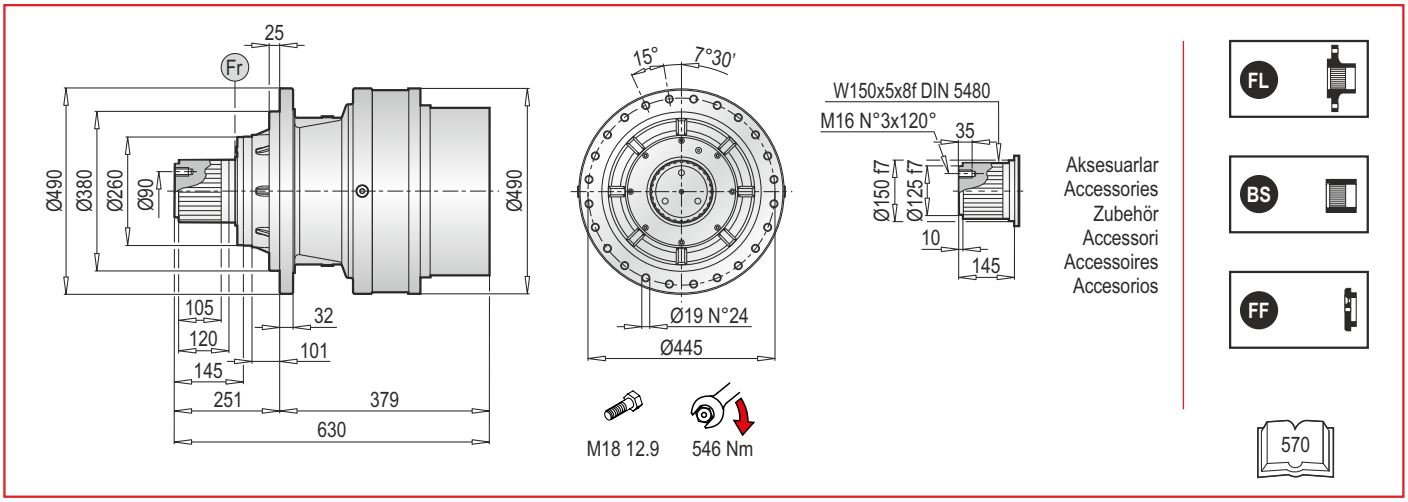

PL 65000 MSF - Elektrik Motor Adaptörleri (IEC) / Electric Motor Couplings (IEC) / Anbauvorrichtung Für Elektromotore (IEC) / Predisposizioni Per Motori Elettrici (IEC) / Adaptations Pour Moteurs Electriques (IEC) / Acoplamientos Para Motores Eléctricos (IEC)

PL	IEC 63			IEC 71			IEC 80			IEC 90			IEC 100			IEC 112		
	LT	Z	ØD	LT	Z	ØD	LT	Z	ØD	LT	Z	ØD	LT	Z	ØD	LT	Z	ØD
65001	-			-			-			-			-			-		
65002	-			-			-			-			-			-		
65003	-			-			-			-			-			-		
65004	850.5	36	140	850.5	36	160	870.5	56	200	870.5	56	200	880.5	66	250	880.5	66	250

PL	IEC 132			IEC 160			IEC 180			IEC 200			IEC 225			IEC 250		
	LT	Z	ØD	LT	Z	ØD	LT	Z	ØD	LT	Z	ØD	LT	Z	ØD	LT	Z	ØD
65001	-			627	148	350	627	148	350	627	148	400	618	139	450	626	147	550
65002	-			824			824			824			815			823		
65003	-			873	118		873	118		903			903	148		-		
65004	914.5	100	300	953.5	139		953.5	139		-			-			-		

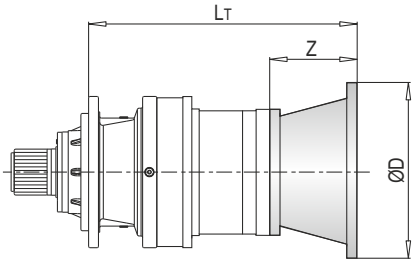

PL	IEC ~ Kg											
	63	71	80	90	100	112	132	160	180	200	225	250
65001	-	-	-	-	-	-	-	423	423	428	434	446
65002	-	-	-	-	-	-	-	516	516	526	531	572
65003	-	-	-	-	-	-	-	543	543	553	558	-
65004	538	538	540	540	541	541	545	555	555	-	-	-

PL 65000 MSF - Giriş Milleri / Input Shafts / Antriebswellen / Alberi Entrata / Arbres D'entree / Ejes De Entrada

PL	EL C 28				EL C 42				EML 42				EML 1"3/8 Z6				EM 65				EM 1"3/8 Z6			
	LT	Z	L	Ød	LT	Z	L	Ød	LT	Z	L	Ød	LT	Z	L	Ød	LT	Z	L	Ød	LT	Z	L	Ød
65002	-				-				-				-				-				-			
65003	-				-				-				-				876.5	121.5	105	65	876.5	121.5	105	1"3/8
65004	878.5	64	50	28	878.5	64	82	42	908.5	94	82	42	908.5	94	106	1"3/8	949.5				949.5			

PL	EP 65				ET 90			
	LT	Z	L	Ød	LT	Z	L	Ød
65002	-				850	174	170	90
65003	908	153	105	65	-			
65004	981				-			

PL	~ Kg							
	EL C 28	EL C 42	EML 42	EML 1"3/8 Z6	EM 65	EM 1"3/8 Z6	EP 65	ET 90
65002	-	-	-	-	-	-	-	542
65003	-	-	-	-	538	538	547	-
65004	538.5	539	542	542	550	550	559	-

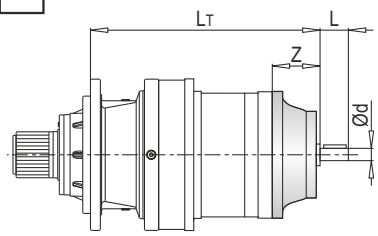

PL 65000 MSF - Sonsuz Dişlili Redüktör Adaptörleri (PMRV/PRV) / Worm Gearbox Adaptors (PMRV/PRV) / Anschluss Für Schneckengetriebe (PMRV/PRV) / Predisposizioni Per Riduttori A Vite Senza Fine (PMRV/PRV) / Adaptation Pour Reducteurs A Vis Sans Fin (PMRV/PRV) / Acoplamiento Para Reductores De Tornillo Sin Fin (PMRV/PRV)

PL	PMRV/PRV 050					PMRV/PRV 063					PMRV/PRV 075				
	LM	l	h	MA	G	LM	l	h	MA	G	LM	l	h	MA	G
65003	-					-					-				
65004	940	50	110	60	80	949.5	63	135	72	95	928.5	75	161	86	112.5

PL	PMRV/PRV 090					PMRV/PRV 110					PMRV/PRV 130				
	LM	l	h	MA	G	LM	l	h	MA	G	LM	l	h	MA	G
65003	-					893	110	237.5	127.5	160	900.5	130	277.5	147.5	180
65004	938.5	90	193	103	129.5	966					973.5				

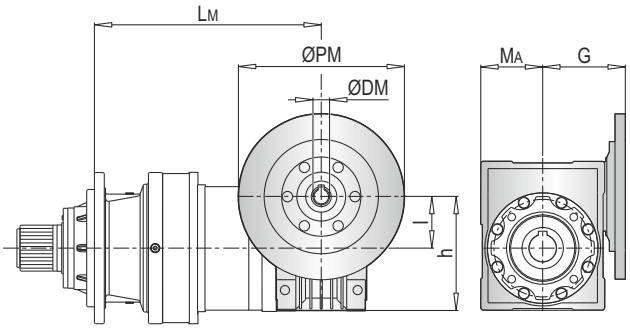

PL	PMRV/PRV 150				
	LM	l	h	MA	G
65003	915	150	320	170	210
65004	988				

PL	PMRV/PRV ~ Kg						
	050	063	075	090	110	130	150
65003	-	-	-	-	567	584	620
65004	541	544.5	547	552	579	596	632

ØPM
ØDM
105

PLB 65000 MSF - Elektrik Motor Adaptörleri (IEC) / Electric Motor Couplings (IEC) / Anbauvorrichtung Für Elektromotore (IEC) / Predisposizioni Per Motori Elettrici (IEC) / Adaptations Pour Moteurs Electriques (IEC) / Acoplamientos Para Motores Eléctricos (IEC)

PLB	IEC 80				IEC 90				IEC 100				IEC 112			
	A	LT	Z	ØD	A	LT	Z	ØD	A	LT	Z	ØD	A	LT	Z	ØD
65003	-				-				-				-			
65004	843	296	56	200	843	296	56	200	843	306	66	250	843	306	66	250

PLB	IEC 132				IEC 160				IEC 180				IEC 200			
	A	LT	Z	ØD	A	LT	Z	ØD	A	LT	Z	ØD	A	LT	Z	ØD
65003	-				741	433	118	350	741	433	118	350	741	463	148	400
65004	843	340	100	300	843	379	139		843	379	139		-			

PLB	IEC ~ Kg							
	80	90	100	112	132	160	180	200
65003	-	-	-	-	-	609	609	619
65004	569	569	570	570	574	584	584	-

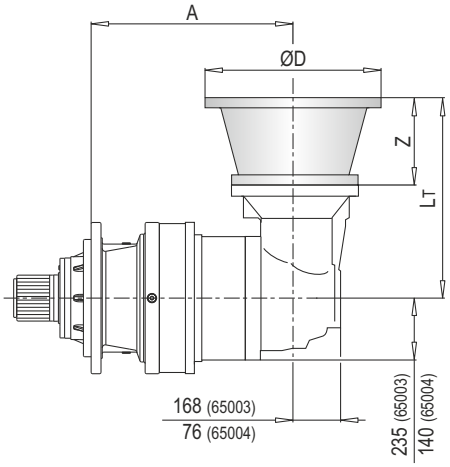

103

PLB 65000 MSF - Giriş Milleri / Input Shafts / Antriebswellen / Alberi Entrata / Arbres D'entree / Ejes De Entrada

PLB	EL C 28					EL C 42					EML 42					EML 1"3/8 Z6					EM 65				
	A	LT	Z	L	Ød	A	LT	Z	L	Ød	A	LT	Z	L	Ød	A	LT	Z	L	Ød	A	LT	Z	L	Ød
65003	-					-					-					-					741	436.5	121.5	105	65
65004	843	304	64	50	28	843	304	64	82	42	843	334	94	82	42	843	334	94	106	1"3/8	843	377.5			

PLB	EM 1"3/8 Z6					EP 65				
	A	LT	Z	L	Ød	A	LT	Z	L	Ød
65003	741	436.5	121.5	105	1"3/8	741	468	153	105	65
65004	843	377.5				843	409			

PLB	~ Kg						
	EL C 28	EL C 42	EML 42	EML 1"3/8 Z6	EM 65	EM 1"3/8 Z6	EP 65
65003	-	-	-	-	538	538	547
65004	538.5	539	542	542	550	550	559

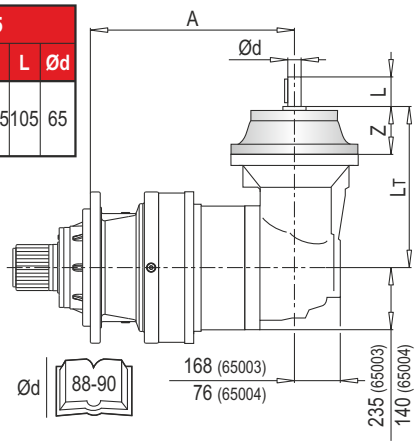

Ød 88-90

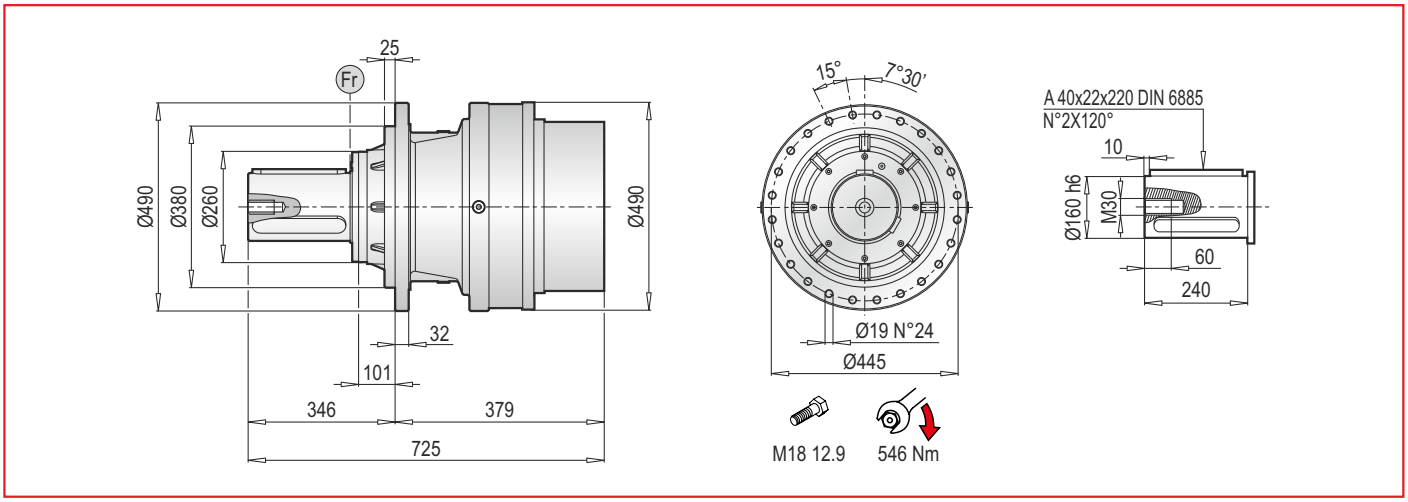

PL 65000 MCF - Elektrik Motor Adaptörleri (IEC) / Electrıc Motor Couplings (IEC) / Anbauvorrichtung Für Elektromotore (IEC) / Predisposizioni Per Motori Elettrici (IEC) / Adaptations Pour Moteurs Electriques (IEC) / Acoplamientos Para Motores Eléctricos (IEC)

PL	IEC 63			IEC 71			IEC 80			IEC 90			IEC 100			IEC 112		
	LT	Z	ØD	LT	Z	ØD	LT	Z	ØD	LT	Z	ØD	LT	Z	ØD	LT	Z	ØD
65001	-			-			-			-			-			-		
65002	-			-			-			-			-			-		
65003	-			-			-			-			-			-		
65004	850.5	36	140	850.5	36	160	870.5	56	200	870.5	56	200	880.5	66	250	880.5	66	250

PL	IEC 132			IEC 160			IEC 180			IEC 200			IEC 225			IEC 250		
	LT	Z	ØD	LT	Z	ØD	LT	Z	ØD	LT	Z	ØD	LT	Z	ØD	LT	Z	ØD
65001	-			627	148	350	627	148	350	627	148	400	618	139	450	626	147	550
65002	-			824			824			824			815			823		
65003	-			873	118		873	118		903			903	148		-	-	-
65004	914.5	100	300	953.5	139		953.5	139		-	-	-	-	-	-	-	-	-

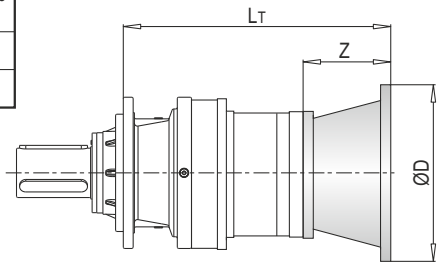

PL	IEC ~ Kg											
	63	71	80	90	100	112	132	160	180	200	225	250
65001	-	-	-	-	-	-	-	423	423	428	434	446
65002	-	-	-	-	-	-	-	516	516	526	531	572
65003	-	-	-	-	-	-	-	543	543	553	558	-
65004	538	538	540	540	541	541	545	555	555	-	-	-

PL 65000 MCF - Giriş Milleri / Input Shafts / Antriebswellen / Alberi Entrata / Arbres D'entree / Ejes De Entrada

PL	EL C 28				EL C 42				EML 42				EML 1"3/8 Z6				EM 65				EM 1"3/8 Z6			
	LT	Z	L	Ød	LT	Z	L	Ød	LT	Z	L	Ød	LT	Z	L	Ød	LT	Z	L	Ød	LT	Z	L	Ød
65002	-				-				-				-				-				-			
65003	-				-				-				-				876.5	121.5	105	65	876.5	121.5	105	1"3/8
65004	878.5	64	50	28	878.5	64	82	42	908.5	94	82	42	908.5	94	106	1"3/8	949.5				949.5			

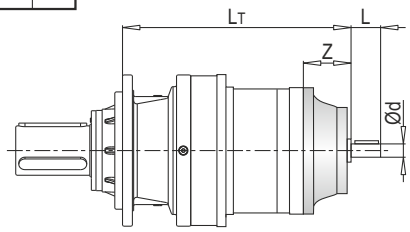

PL	EP 65				ET 90			
	LT	Z	L	Ød	LT	Z	L	Ød
65002	-				850	174	170	90
65003	908	153	105	65	-			
65004	981				-			

PL	~ Kg							
	EL C 28	EL C 42	EML 42	EML 1"3/8 Z6	EM 65	EM 1"3/8 Z6	EP 65	ET 90
65002	-	-	-	-	-	-	-	542
65003	-	-	-	-	538	538	547	-
65004	538.5	539	542	542	550	550	559	-

PL 65000 MCF - Sonsuz Dişlili Redüktör Adaptörleri (PMRV/PRV) / Worm Gearbox Adaptors (PMRV/PRV) / Anschluss Für Schneckengetriebe (PMRV/PRV) / Predisposizioni Per Riduttori A Vite Senza Fine (PMRV/PRV) / Adaptation Pour Reducteurs A Vis Sans Fin (PMRV/PRV) / Acoplamiento Para Reductores De Tornillo Sin Fin (PMRV/PRV)

PL	PMRV/PRV 050					PMRV/PRV 063					PMRV/PRV 075				
	LM	l	h	MA	G	LM	l	h	MA	G	LM	l	h	MA	G
65003	-					-					-				
65004	940	50	110	60	80	949.5	63	135	72	95	928.5	75	161	86	112.5

PL	PMRV/PRV 090					PMRV/PRV 110					PMRV/PRV 130				
	LM	l	h	MA	G	LM	l	h	MA	G	LM	l	h	MA	G
65003	-					893	110	237.5	127.5	160	900.5	130	277.5	147.5	180
65004	938.5	90	193	103	129.5	966					973.5				

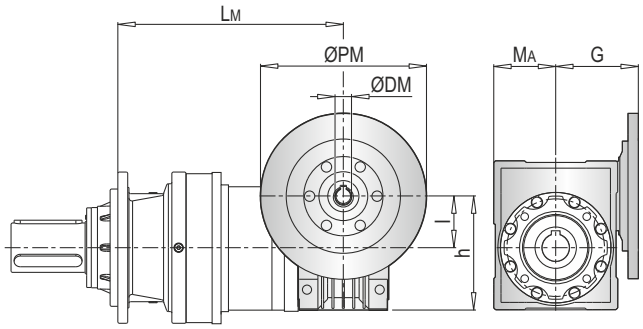

PL	PMRV/PRV 150				
	LM	l	h	MA	G
65003	915	150	320	170	210
65004	988				

PL	PMRV/PRV ~ Kg						
	050	063	075	090	110	130	150
65003	-	-	-	-	567	584	620
65004	541	544.5	547	552	579	596	632

ØPM
ØDM
105

PLB 65000 MCF - Elektrik Motor Adaptörleri (IEC) / Electric Motor Couplings (IEC) / Anbauvorrichtung Für Elektromotore (IEC) / Predisposizioni Per Motori Elettrici (IEC) / Adaptations Pour Moteurs Electriques (IEC) / Acoplamientos Para Motores Eléctricos (IEC)

PLB	IEC 80				IEC 90				IEC 100				IEC 112			
	A	LT	Z	ØD	A	LT	Z	ØD	A	LT	Z	ØD	A	LT	Z	ØD
65003	-				-				-				-			
65004	843	296	56	200	843	296	56	200	843	306	66	250	843	306	66	250

PLB	IEC 132				IEC 160				IEC 180				IEC 200			
	A	LT	Z	ØD	A	LT	Z	ØD	A	LT	Z	ØD	A	LT	Z	ØD
65003	-				741	433	118	350	741	433	118	350	741	463	148	400
65004	843	340	100	300	843	379	139		843	379	139		-			

PLB	IEC ~ Kg							
	80	90	100	112	132	160	180	200
65003	-	-	-	-	-	609	609	619
65004	569	569	570	570	574	584	584	-

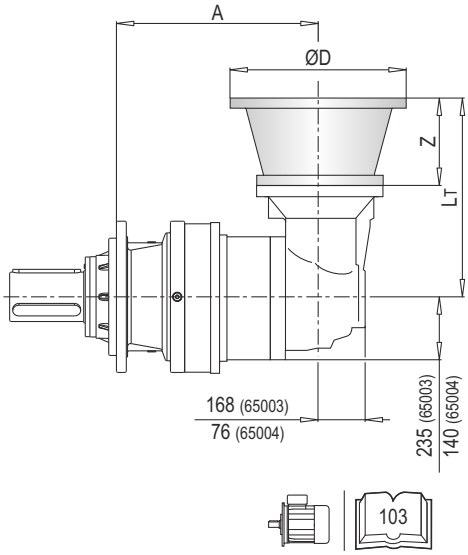

PLB 65000 MCF - Giriş Milleri / Input Shafts / Antriebswellen / Alberi Entrata / Arbres D'entree / Ejes De Entrada

PLB	EL C 28					EL C 42					EML 42					EML 1"3/8 Z6					EM 65				
	A	LT	Z	L	Ød	A	LT	Z	L	Ød	A	LT	Z	L	Ød	A	LT	Z	L	Ød	A	LT	Z	L	Ød
65003	-					-					-					-					741	436.5	121.5	105	65
65004	843	304	64	50	28	843	304	64	82	42	843	334	94	82	42	843	334	94	106	1"3/8	843	377.5			

PLB	EM 1"3/8 Z6					EP 65				
	A	LT	Z	L	Ød	A	LT	Z	L	Ød
65003	741	436.5	121.5	105	1"3/8	741	468	153	105	65
65004	843	377.5				843	409			

PLB	~ Kg						
	EL C 28	EL C 42	EML 42	EML 1"3/8 Z6	EM 65	EM 1"3/8 Z6	EP 65
65003	-	-	-	-	538	538	547
65004	538.5	539	542	542	550	550	559

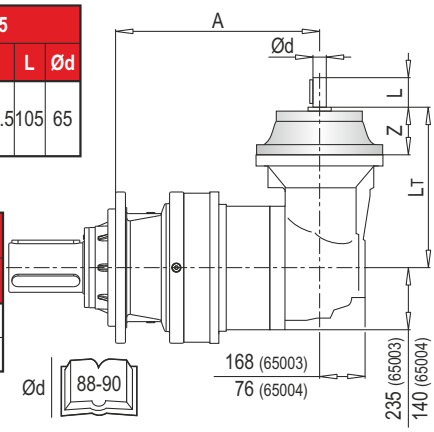

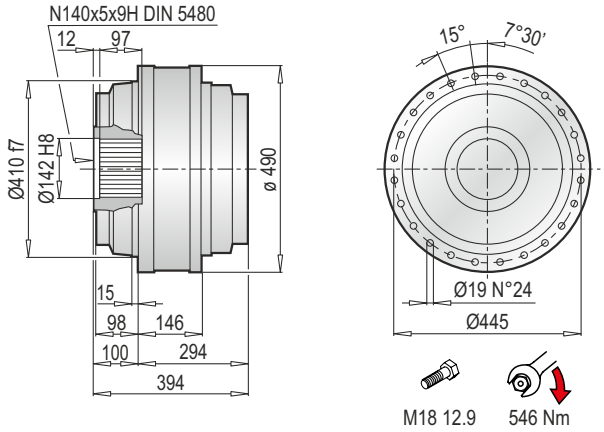

Aksesuarlar
Accessories
Zubehör
Accessori
Accessoires
Accesorios

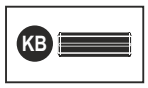

PL 65000 F - Elektrik Motor Adaptörleri (IEC) / Electrıc Motor Couplings (IEC) / Anbauvorrichtung Für Elektromotore (IEC) / Predisposizioni Per Motori Elettrici (IEC) / Adaptations Pour Moteurs Electriques (IEC) / Acoplamientos Para Motores Eléctricos (IEC)

PL	IEC 63			IEC 71			IEC 80			IEC 90			IEC 100			IEC 112		
	LT	Z	ØD	LT	Z	ØD	LT	Z	ØD	LT	Z	ØD	LT	Z	ØD	LT	Z	ØD
65001	-			-			-			-			-			-		
65002	-			-			-			-			-			-		
65003	-			-			-			-			-			-		
65004	665.5	36	140	665.5	36	160	685.5	56	200	685.5	56	200	695.5	66	250	695.5	66	250

PL	IEC 132			IEC 160			IEC 180			IEC 200			IEC 225			IEC 250		
	LT	Z	ØD	LT	Z	ØD	LT	Z	ØD	LT	Z	ØD	LT	Z	ØD	LT	Z	ØD
65001	-			444	150	350	444	150	350	444	150	400	443	139	450	433	139	550
65002	-			641			641			641			630			630		
65003	-			688	118		688	118		718	148		709			-		
65004	729.5	100	300	747.5			747.5			-			-			-		

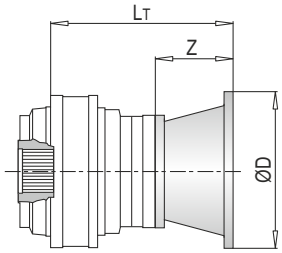

PL	IEC ~ Kg											
	63	71	80	90	100	112	132	160	180	200	225	250
65001	-	-	-	-	-	-	-	323	323	328	334	346
65002	-	-	-	-	-	-	-	418	418	428	433	474
65003	-	-	-	-	-	-	-	445	445	455	460	-
65004	440	440	442	442	443	443	447	457	457	-	-	-

PL 65000 F - Giriş Milleri / Input Shafts / Antriebswellen / Alberi Entrata / Arbres D'entree / Ejes De Entrada

PL	EL C 28				EL C 42				EML 42				EML 1"3/8 Z6				EM 65				EM 1"3/8 Z6			
	LT	Z	L	Ød	LT	Z	L	Ød	LT	Z	L	Ød	LT	Z	L	Ød	LT	Z	L	Ød	LT	Z	L	Ød
65002	-				-				-				-				-				-			
65003	-				-				-				-				691.5	121.5	105	65	691.5	121.5	105	1"3/8
65004	693.5	64	50	28	693.5	64	82	42	723.5	94	82	42	723.5	94	106	1"3/8	751				751			

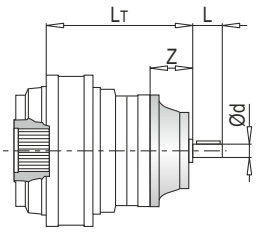

PL	EP 65				ET 90			
	LT	Z	L	Ød	LT	Z	L	Ød
65002	-				465.5	171.5	170	90
65003	723	153	105	65	-			
65004	782.5				-			

PL	~ Kg							
	EL C 28	EL C 42	EML 42	EML 1"3/8 Z6	EM 65	EM 1"3/8 Z6	EP 65	ET 90
65002	-	-	-	-	-	-	-	444
65003	-	-	-	-	440	440	449	-
65004	440.5	441	444	444	452	452	461	-

PL 65000 F - Sonsuz Dişlili Redüktör Adaptörleri (PMRV/PRV) / Worm Gearbox Adaptors (PMRV/PRV) / Anschluss Für Schneckengetriebe (PMRV/PRV) / Predisposizioni Per Riduttori A Vite Senza Fine (PMRV/PRV) / Adaptation Pour Reducteurs A Vis Sans Fin (PMRV/PRV) / Acoplamiento Para Reductores De Tornillo Sin Fin (PMRV/PRV)

PL	PMRV/PRV 050					PMRV/PRV 063					PMRV/PRV 075				
	LM	l	h	MA	G	LM	l	h	MA	G	LM	l	h	MA	G
65003	-					-					-				
65004	751	50	110	60	80	760.5	63	135	72	95	739.5	75	161	86	112.5

PL	PMRV/PRV 090					PMRV/PRV 110					PMRV/PRV 130				
	LM	l	h	MA	G	LM	l	h	MA	G	LM	l	h	MA	G
65003	-					704	110	237.5	127.5	160	709.5	130	277.5	147.5	180
65004	749.5	90	193	103	129.5	763.5					769				

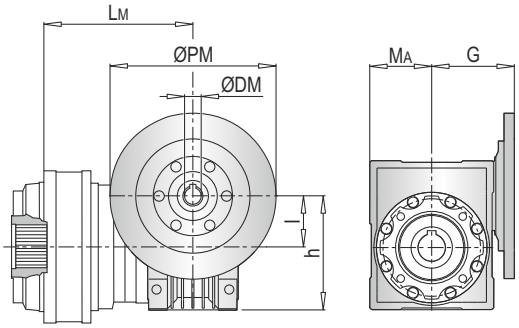

PL	PMRV/PRV 150				
	LM	l	h	MA	G
65003	726	150	320	170	210
65004	760.5				

PL	PMRV/PRV ~ Kg						
	050	063	075	090	110	130	150
65003	-	-	-	-	469	486	522
65004	443	446.5	449	454	481	498	534

PLB 65000 F - Elektrik Motor Adaptörleri (IEC) / Electric Motor Couplings (IEC) /Anbauvorrichtung Für Elektromotore (IEC) / Predisposizioni Per Motori Elettrici (IEC) / Adaptations Pour Moteurs Electriques (IEC) /Acoplamientos Para Motores Eléctricos (IEC)

PLB	IEC 80				IEC 90				IEC 100				IEC 112			
	A	LT	Z	ØD	A	LT	Z	ØD	A	LT	Z	ØD	A	LT	Z	ØD
65003	-				-				-				-			
65004	658	296	56	200	658	296	56	200	658	306	66	250	658	306	66	250

PLB	IEC 132				IEC 160				IEC 180				IEC 200			
	A	LT	Z	ØD	A	LT	Z	ØD	A	LT	Z	ØD	A	LT	Z	ØD
65003	-				556	433	118	350	556	433	118	350	556	463	148	400
65004	658	340	100	300	658	379	139		658	379	139		-			

PLB	IEC ~ Kg							
	80	90	100	112	132	160	180	200
65003	-	-	-	-	-	507	507	517
65004	467	467	468	468	472	482	482	-

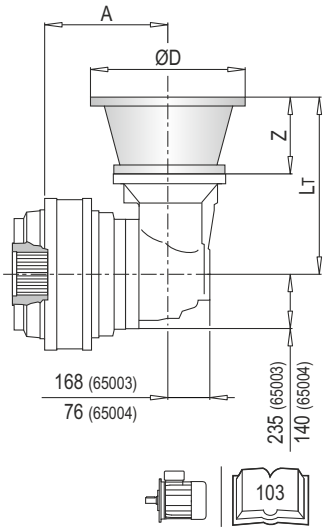

PLB 65000 F - Giriş Milleri / Input Shafts / Antriebswellen / Alberi Entrata / Arbres D'entree / Ejes De Entrada

PLB	EL C 28					EL C 42					EML 42					EML 1"3/8 Z6					EM 65				
	A	LT	Z	L	Ød	A	LT	Z	L	Ød	A	LT	Z	L	Ød	A	LT	Z	L	Ød	A	LT	Z	L	Ød
65003	-					-					-					-					556	436.5	121.5	105	65
65004	658	304	64	50	28	658	304	64	82	42	658	334	94	82	42	658	334	94	106	1"3/8	658	361.5			

PLB	EM 1"3/8 Z6					EP 65				
	A	LT	Z	L	Ød	A	LT	Z	L	Ød
65003	556	436.5	121.5	105	1"3/8	556	468	153	105	65
65004	658	361.5				658	393			

PLB	~ Kg						
	EL C 28	EL C 42	EML 42	EML 1"3/8 Z6	EM 65	EM 1"3/8 Z6	EP 65
65003	-	-	-	-	-	498	507
65004	498.5	499	502	502	510	510	519

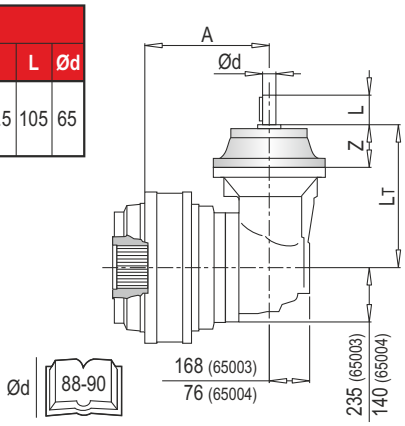

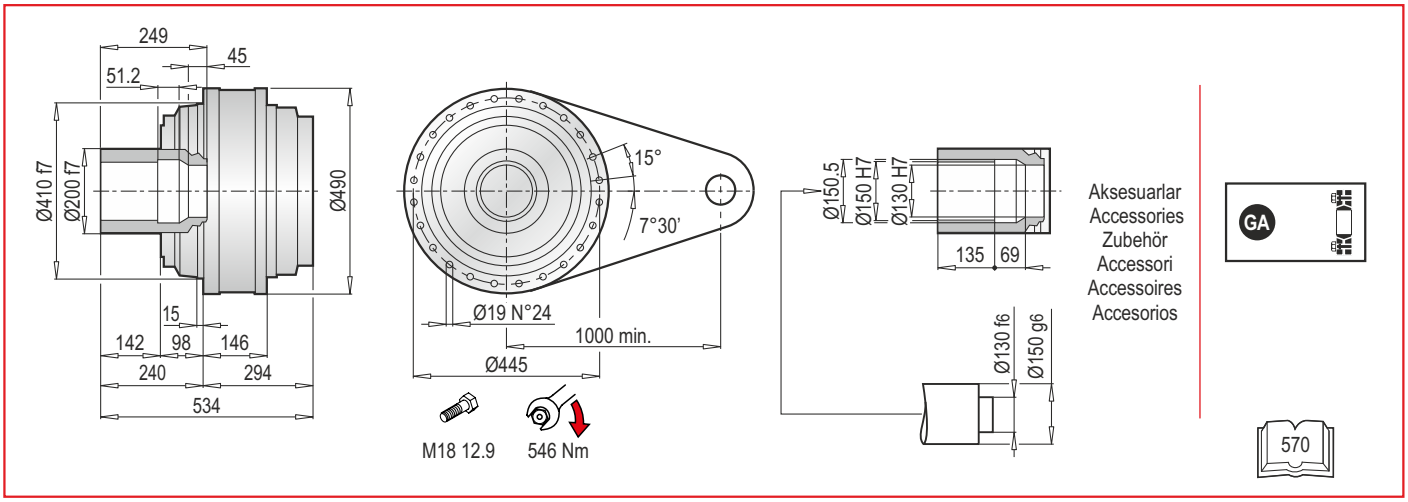

PL 65000 FS - Elektrik Motor Adaptörleri (IEC) / Electric Motor Couplings (IEC) /Anbauvorrichtung Für Elektromotore (IEC) / Predisposizioni Per Motori Elettrici (IEC) / Adaptations Pour Moteurs Electriques (IEC) /Acoplamientos Para Motores Eléctricos (IEC)

PL	IEC 63			IEC 71			IEC 80			IEC 90			IEC 100			IEC 112		
	LT	Z	ØD	LT	Z	ØD	LT	Z	ØD	LT	Z	ØD	LT	Z	ØD	LT	Z	ØD
65001	-			-			-			-			-			-		
65002	-			-			-			-			-			-		
65003	-			-			-			-			-			-		
65004	665.5	36	140	665.5	36	160	685.5	56	200	685.5	56	200	695.5	66	250	695.5	66	250

PL	IEC 132			IEC 160			IEC 180			IEC 200			IEC 225			IEC 250		
	LT	Z	ØD	LT	Z	ØD	LT	Z	ØD	LT	Z	ØD	LT	Z	ØD	LT	Z	ØD
65001	-			444	150	350	444	150	350	444	150	400	443	139	450	433	139	550
65002	-			641			641			641			630			630		
65003	-			688	118		688	118		718	148		709			-		
65004	729.5	100	300	747.5			747.5			-			-			-		

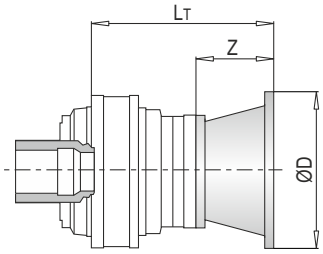

PL	IEC ~ Kg											
	63	71	80	90	100	112	132	160	180	200	225	250
65001	-	-	-	-	-	-	-	337	337	342	348	360
65002	-	-	-	-	-	-	-	432	432	442	447	488
65003	-	-	-	-	-	-	-	459	459	469	474	-
65004	454	454	456	456	457	457	461	471	471	-	-	-

PL 65000 FS - Giriş Milleri / Input Shafts / Antriebswellen / Alberi Entrata / Arbres D'entree / Ejes De Entrada

PL	EL C 28				EL C 42				EML 42				EML 1"3/8 Z6				EM 65				EM 1"3/8 Z6			
	LT	Z	L	Ød	LT	Z	L	Ød	LT	Z	L	Ød	LT	Z	L	Ød	LT	Z	L	Ød	LT	Z	L	Ød
65002	-				-				-				-				-				-			
65003	-				-				-				-				691.5	121.5	105	65	691.5	121.5	105	1"3/8
65004	693.5	64	50	28	693.5	64	82	42	723.5	94	82	42	723.5	94	106	1"3/8	751				751			

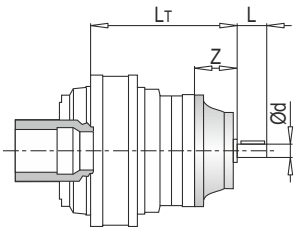

PL	EP 65				ET 90			
	LT	Z	L	Ød	LT	Z	L	Ød
65002	-				465.5	171.5	170	90
65003	723	153	105	65	-			
65004	782.5				-			

PL	~ Kg							
	EL C 28	EL C 42	EML 42	EML 1"3/8 Z6	EM 65	EM 1"3/8 Z6	EP 65	ET 90
65002	-	-	-	-	-	-	-	458
65003	-	-	-	-	454	454	463	-
65004	456.5	455	464	464	472	472	481	-

PL 65000 FS - Sonsuz Dişlili Redüktör Adaptörleri (PMRV/PRV) / Worm Gearbox Adaptors (PMRV/PRV) / Anschluss Für Schneckengetriebe (PMRV/PRV) / Predisposizioni Per Riduttori A Vite Senza Fine (PMRV/PRV) / Adaptation Pour Reducteurs A Vis Sans Fin (PMRV/PRV) / Acoplamiento Para Reductores De Tornillo Sin Fin (PMRV/PRV)

PL	PMRV/PRV 050					PMRV/PRV 063					PMRV/PRV 075				
	LM	I	h	MA	G	LM	I	h	MA	G	LM	I	h	MA	G
65003	-					-					-				
65004	751	50	110	60	80	760.5	63	135	72	95	739.5	75	161	86	112.5

PL	PMRV/PRV 090					PMRV/PRV 110					PMRV/PRV 130				
	LM	I	h	MA	G	LM	I	h	MA	G	LM	I	h	MA	G
65003	-					704	110	237.5	127.5	160	709.5	130	277.5	147.5	180
65004	749.5	90	193	103	129.5	763.5					769				

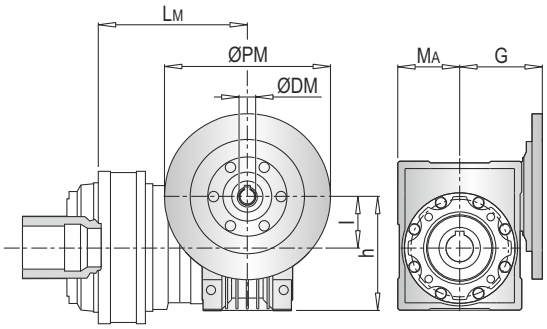

PL	PMRV/PRV 150				
	LM	I	h	MA	G
65003	726	150	320	170	210
65004	760.5				

PL	PMRV/PRV ~ Kg						
	050	063	075	090	110	130	150
65003	-	-	-	-	483	500	536
65004	457	460.5	463	468	495	512	548

ØPM
ØDM
105

PLB 65000 FS - Elektrik Motor Adaptörleri (IEC) / Electric Motor Couplings (IEC) / Anbauvorrichtung Für Elektromotore (IEC) / Predisposizioni Per Motori Elettrici (IEC) / Adaptations Pour Moteurs Electriques (IEC) / Acoplamientos Para Motores Eléctricos (IEC)

PLB	IEC 80				IEC 90				IEC 100				IEC 112			
	A	LT	Z	ØD	A	LT	Z	ØD	A	LT	Z	ØD	A	LT	Z	ØD
65003	-				-				-				-			
65004	658	296	56	200	658	296	56	200	658	306	66	250	658	306	66	250

PLB	IEC 132				IEC 160				IEC 180				IEC 200			
	A	LT	Z	ØD	A	LT	Z	ØD	A	LT	Z	ØD	A	LT	Z	ØD
65003	-				556	433	118	350	556	433	118	350	556	463	148	400
65004	658	340	100	300	658	379	139		658	379	139		-			

PLB	IEC ~ Kg							
	80	90	100	112	132	160	180	200
65003	-	-	-	-	-	521	521	531
65004	481	481	482	482	486	496	496	-

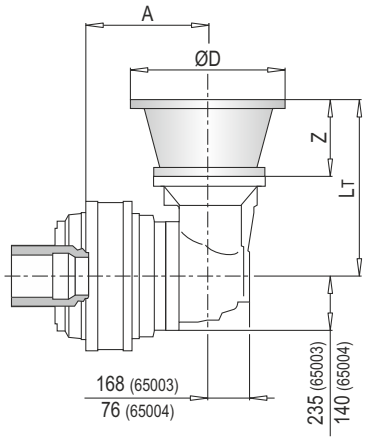

103

PLB 65000 FS - Giriş Milleri / Input Shafts / Antriebswellen / Alberi Entrata / Arbres D'entree / Ejes De Entrada

PLB	EL C 28					EL C 42					EML 42					EML 1"3/8 Z6					EM 65				
	A	LT	Z	L	Ød	A	LT	Z	L	Ød	A	LT	Z	L	Ød	A	LT	Z	L	Ød	A	LT	Z	L	Ød
65003	-					-					-					-					556	436.5	121.5	105	65
65004	658	304	64	50	28	658	304	64	82	42	658	334	94	82	42	658	334	94	106	1"3/8	658	361.5			

PLB	EM 1"3/8 Z6					EP 65				
	A	LT	Z	L	Ød	A	LT	Z	L	Ød
65003	556	436.5	121.5	105	1"3/8	556	468	153	105	65
65004	658	361.5				658	393			

PLB	~ Kg						
	EL C 28	EL C 42	EML 42	EML 1"3/8 Z6	EM 65	EM 1"3/8 Z6	EP 65
65003	-	-	-	-	516	516	525
65004	479.5	480	483	483	491	491	500

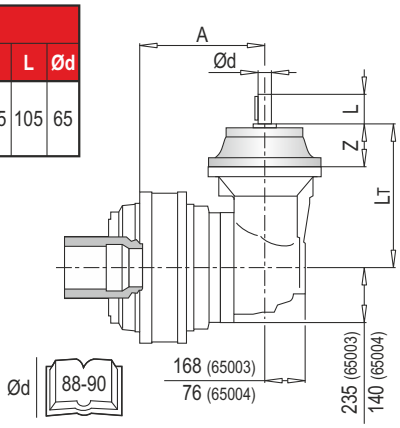

Ød
88-90

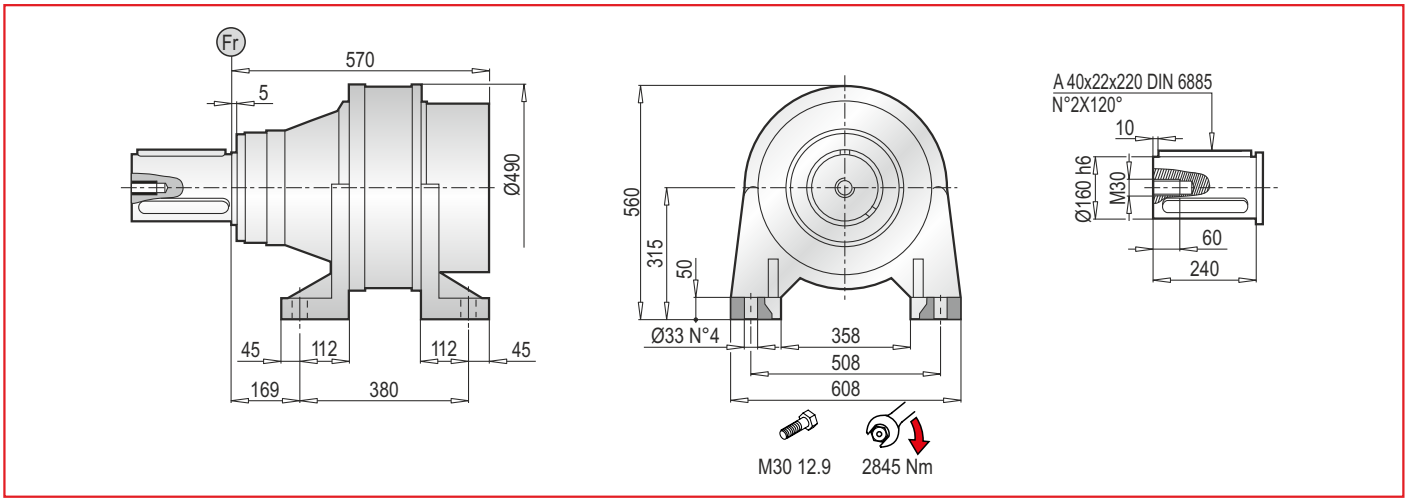

PL 65000 CPC - Elektrik Motor Adaptörleri (IEC) / Electrıc Motor Couplings (IEC) / Anbauvorrichtung Für Elektromotore (IEC) / Predisposizioni Per Motori Elettrici (IEC) / Adaptations Pour Moteurs Electriques (IEC) / Acoplamientos Para Motores Eléctricos (IEC)

PL	IEC 63			IEC 71			IEC 80			IEC 90			IEC 100			IEC 112		
	LT	Z	ØD	LT	Z	ØD	LT	Z	ØD	LT	Z	ØD	LT	Z	ØD	LT	Z	ØD
65001	-			-			-			-			-			-		
65002	-			-			-			-			-			-		
65003	-			-			-			-			-			-		
65004	956.5	36	140	956.5	36	160	976.5	56	200	976.5	56	200	986.5	66	250	986.5	66	250

PL	IEC 132			IEC 160			IEC 180			IEC 200			IEC 225			IEC 250		
	LT	Z	ØD	LT	Z	ØD	LT	Z	ØD	LT	Z	ØD	LT	Z	ØD	LT	Z	ØD
65001	-			720	150	350	720	150	350	720	150	400	709	139	450	709	139	550
65002	-			932			932			932			921			921		
65003	-			979	118		979	118		1009	148		1000			-		
65004	1020.5	100	300	1038.5			1038.5			-			-			-		

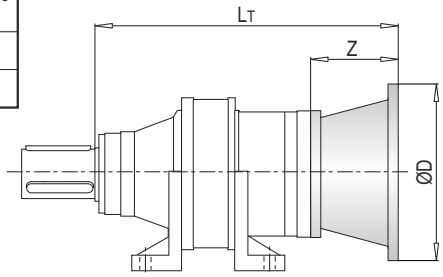

PL	IEC ~ Kg											
	63	71	80	90	100	112	132	160	180	200	225	250
65001	-	-	-	-	-	-	-	487	487	492	498	510
65002	-	-	-	-	-	-	-	584	584	594	599	640
65003	-	-	-	-	-	-	-	611	611	621	626	-
65004	606	606	608	608	609	609	613	623	523	-	-	-

PL 65000 CPC- Giriş Milleri / Input Shafts / Antriebswellen / Alberi Entrata / Arbres D'entree / Ejes De Entrada

PL	EL C 28				EL C 42				EML 42				EML 1"3/8 Z6				EM 65				EM 1"3/8 Z6			
	LT	Z	L	Ød	LT	Z	L	Ød	LT	Z	L	Ød	LT	Z	L	Ød	LT	Z	L	Ød	LT	Z	L	Ød
65002	-				-				-				-				-				-			
65003	-				-				-				-				982.5	121.5	105	65	955	94	106	1"3/8
65004	984.5	64	50	28	984.5	64	82	42	1014.5	94	82	42	1014.5	94	106	1"3/8	1042				1014.5			

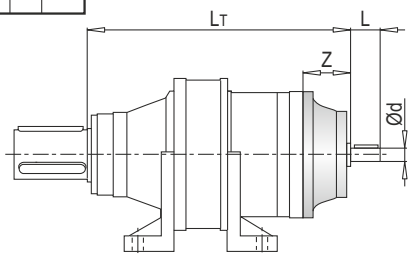

PL	EP 65				ET 90			
	LT	Z	L	Ød	LT	Z	L	Ød
65002	-				953.5	171.5	170	90
65003	1014	153	105	65	-			
65004	1073.5				-			

PL	~ Kg							
	EL C 28	EL C 42	EML 42	EML 1"3/8 Z6	EM 65	EM 1"3/8 Z6	EP 65	ET 90
65002	-	-	-	-	-	-	-	610
65003	-	-	-	-	606	606	615	-
65004	606.5	607	610	610	618	618	627	-

PL 65000 CPC - Sonsuz Dişlili Redüktör Adaptörleri (PMRV/PRV) / Worm Gearbox Adaptors (PMRV/PRV) / Anschluss Für Schneckengetriebe (PMRV/PRV) / Predisposizioni Per Riduttori A Vite Senza Fine (PMRV/PRV) / Adaptation Pour Reducteurs A Vis Sans Fin (PMRV/PRV) / Acoplamiento Para Reductores De Tornillo Sin Fin (PMRV/PRV)

PL	PMRV/PRV 050					PMRV/PRV 063					PMRV/PRV 075				
	LM	l	h	MA	G	LM	l	h	MA	G	LM	l	h	MA	G
65003	-					-					-				
65004	1042	50	110	60	80	1051.5	63	135	72	95	1030.5	75	161	86	112.5

PL	PMRV/PRV 090					PMRV/PRV 110					PMRV/PRV 130				
	LM	l	h	MA	G	LM	l	h	MA	G	LM	l	h	MA	G
65003	-					995	110	237.5	127.5	160	1000.5	130	277.5	147.5	180
65004	1040.5	90	193	103	129.5	1054.5					1060				

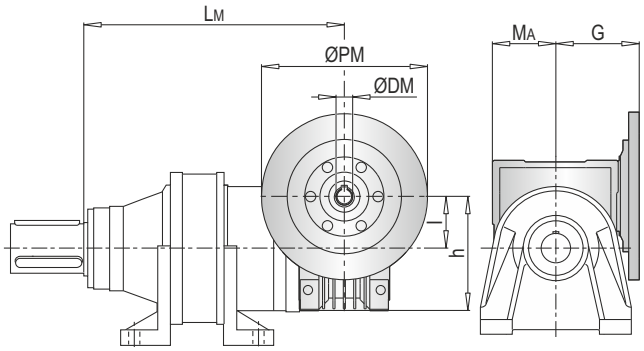

PL	PMRV/PRV 150				
	LM	l	h	MA	G
65003	1017	150	320	170	210
65004	1076.5				

PL	PMRV/PRV ~ Kg						
	050	063	075	090	110	130	150
65003	-	-	-	-	635	652	688
65004	609	612.5	615	620	647	664	700

ØPM
ØDM
105

PLB 65000 CPC - Elektrik Motor Adaptörleri (IEC) / Electric Motor Couplings (IEC) / Anbauvorrichtung Für Elektromotore (IEC) / Predisposizioni Per Motori Elettrici (IEC) / Adaptations Pour Moteurs Electriques (IEC) / Acoplamientos Para Motores Eléctricos (IEC)

PLB	IEC 80				IEC 90				IEC 100				IEC 112			
	A	LT	Z	ØD	A	LT	Z	ØD	A	LT	Z	ØD	A	LT	Z	ØD
65003	-				-				-				-			
65004	949	296	56	200	949	296	56	200	949	306	66	250	949	306	66	250

PLB	IEC 132				IEC 160				IEC 180				IEC 200			
	A	LT	Z	ØD	A	LT	Z	ØD	A	LT	Z	ØD	A	LT	Z	ØD
65003	-				847	433	118	350	847	433	118	350	847	463	148	400
65004	949	340	100	300	949	379	139		949	379	139		-			

PLB	IEC ~ Kg							
	80	90	100	112	132	160	180	200
65003	-	-	-	-	-	673	673	683
65004	633	633	634	634	638	648	648	-

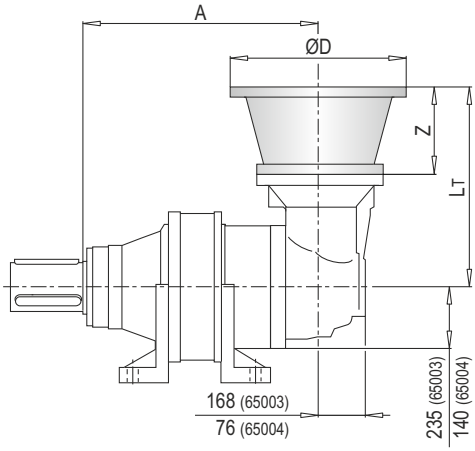

103

PLB 65000 CPC - Giriş Milleri / Input Shafts / Antriebswellen / Alberi Entrata / Arbres D'entree / Ejes De Entrada

PLB	EL C 28					EL C 42					EML 42					EML 1"3/8 Z6					EM 65				
	A	LT	Z	L	Ød	A	LT	Z	L	Ød	A	LT	Z	L	Ød	A	LT	Z	L	Ød	A	LT	Z	L	Ød
65003	-					-					-					-					847	436.5	121.5	105	65
65004	949	304	64	50	28	949	304	64	82	42	949	334	94	82	42	949	334	94	106	1"3/8	949	361.5			

PLB	EM 1"3/8 Z6					EP 65				
	A	LT	Z	L	Ød	A	LT	Z	L	Ød
65003	847	436.5	121.5	105	1"3/8	847	468	153	105	65
65004	949	361.5				949	393			

PLB	~ Kg						
	EL C 28	EL C 42	EML 42	EML 1"3/8 Z6	EM 65	EM 1"3/8 Z6	EP 65
65003	-	-	-	-	668	668	677
65004	631.5	632	635	635	643	643	652

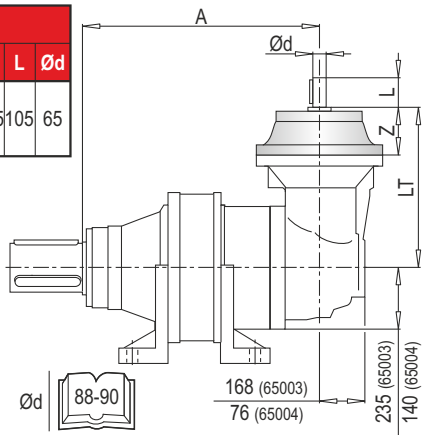

Ød
88-90

AKSESUARLAR / ACCESSORIES / ZUBEHÖR / ACCESSORI / ACCESSOIRES / ACCESORIOS

BS
Spline kaplin / Splined bushing / Innenverzahnte Buchse
Boccola scanalata / Moyeu cannelé / Casquillo ranurado

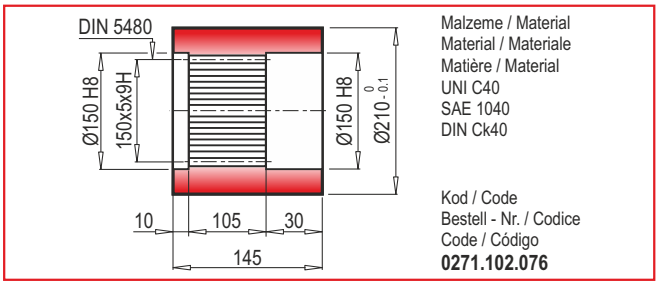

Malzeme / Material
Material / Materiale
Matière / Material
UNI C40
SAE 1040
DIN Ck40

Kod / Code
Bestell - Nr. / Codice
Code / Código
0271.102.076

KB
Spline mil / Splined rod / Außenverzahnte Welle
Barra scanalata / Arbre cannelé / Barra ranurada

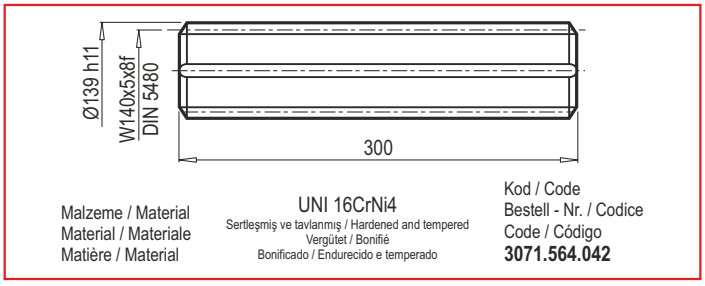

Malzeme / Material
Material / Materiale
Matière / Material

UNI 16CrNi4
Sertleşmiş ve tavlanmış / Hardened and tempered
Vergütet / Bonifié
Bonificado / Endurecido e temperado

Kod / Code
Bestell - Nr. / Codice
Code / Código
3071.564.042

FL
Flanş / Flange / Flansch
Flangia / Bride / Brida

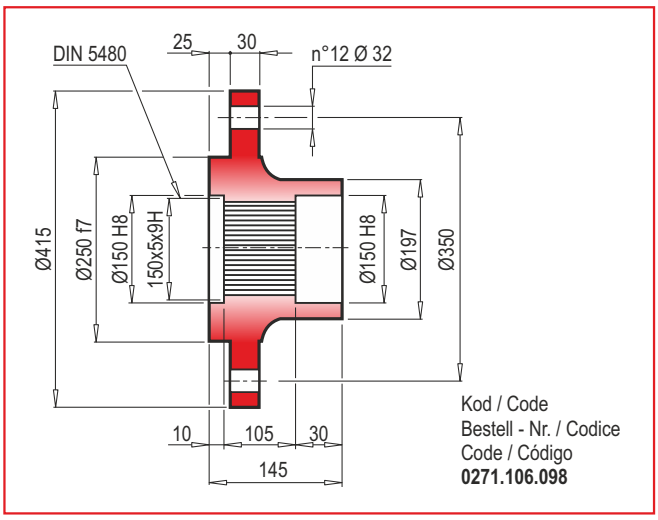

Kod / Code
Bestell - Nr. / Codice
Code / Código
0271.106.098

GA
Konik sıktırma / Shrink disc / Schrumpfscheibe
Giunto di attrito / Frette de serrage / Disco de contracción

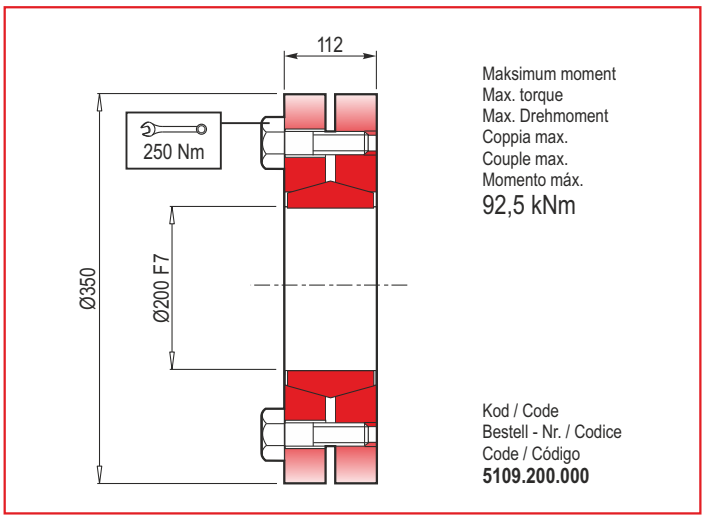

Maksimum moment
Max. torque
Max. Drehmoment
Coppia max.
Couple max.
Momento máx.
92,5 kNm

Kod / Code
Bestell - Nr. / Codice
Code / Código
5109.200.000

FF
Sabitleme rondelası / Stop bottom plate / Endscheibe
Fondello di arresto / Bouchon de fermeture / Tapón de detención

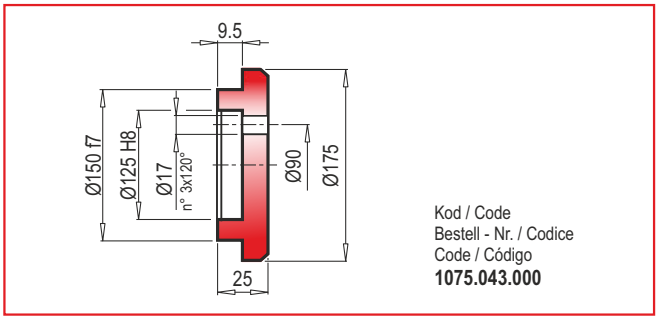

Kod / Code
Bestell - Nr. / Codice
Code / Código
1075.043.000

TR RADYAL YÜKLER (Fr)

Aşağıdaki grafikler istenilen $n_2$xh değerinin elde edilmesi için gerekli olan radyal yükleri ve K faktörlerini göstermektedir.

EN RADIAL LOADS (Fr)

The following curves show the radial loads and the K factors to obtain the required n2xh value.

DE RADIALLAST (Fr)

In den nachstehenden Diagrammen ist die Radiallast un der Koeffizient K dargestellt und kann mit dem gewünschten Wert $n_2$xh verglichen werden.

IT CARICHI RADIALI (Fr)

Nei diagrammi seguenti sono riportati i carichi radiali e i coefficienti K per rapportarli al valore $n_2$xh desiderato.

FR CHARGES RADIALES (Fr)

Dans les diagrammes suivants sont indiqués les charges radiales et les facteurs K de façon à obtenir la valeur $n_2$xh désirée.

ES CARGAS RADIALES (Fr)

En los siguientes diagramas se indican las cargas radiales y los coefici - entes K para obtener el valor requerido $n_2$xh.

M - CPC*

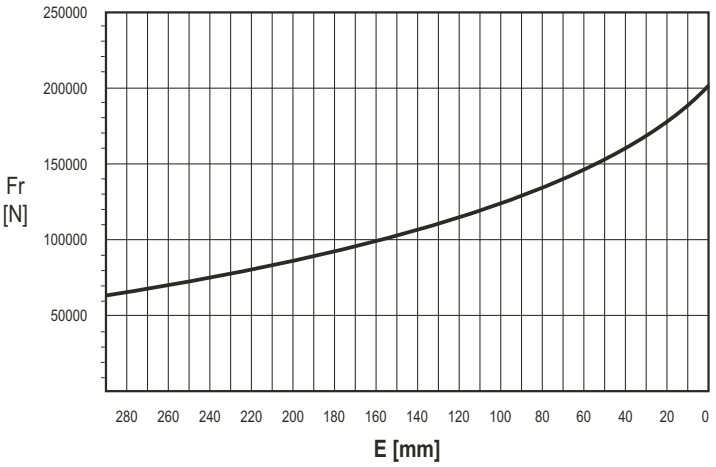

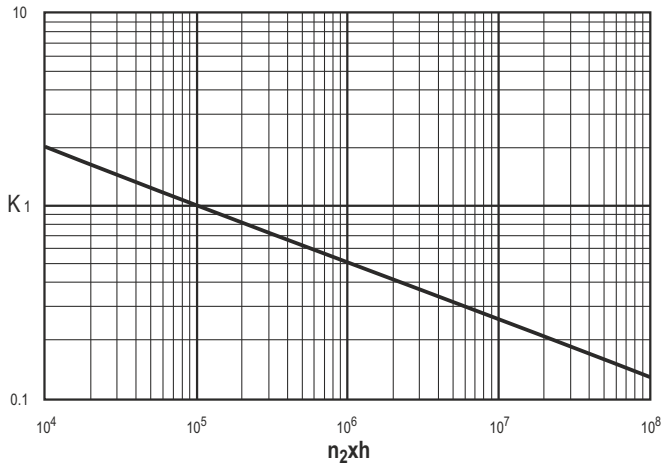

	n x h				
	10^5	10^4	10^6	10^7	10^8
M	Fr	Fr • K			
CPC*	Fr • 0.75	Fr • K • 0.75			

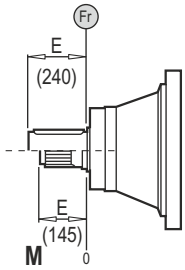

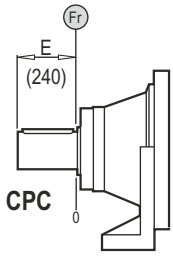

TR EKSENEL YÜKLER (Fa)

Tabloda yer alan eksenel yük değerleri, çıkış tipine ve uygulamanın yük yönüne göre değişir.

EN AXIAL LOADS (Fa)

The values of the axial loads in the table refer to the output versions and load direction of application.

DE AXIALLAST (Fa)

Die dargestellten Werte der Axiallast basieren auf der Version und der applizierten Lastrichtung.

IT CARICHI ASSIALI (Fa)

I valori dei carichi assiali indicati in tabella sono riferiti alle versioni e alla direzione di applicazione del carico.

FR CHARGES AXIALES (Fa)

Les valeurs des charges axiales indiquées dans le tableau se réfèrent aux versions et à la direction d'application de lacharge.

ES CARGAS AXIALES (Fa)

Los valores de las cargas axiales indicados en la tabla se refieren a las versiones y a la dirección de aplicación de la carga.

Fa [N]	M	CPC	
	50000	50000	←
	100000	100000	→

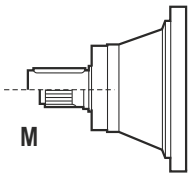

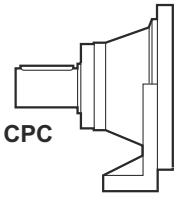

TEKNİK VERİLER / TECHNICAL DATA / TECHNISCHE DATEN / DATI TECNICI / DONNÉES TECHNIQUES / DATOS TÉCNICAS

	i_{ges}	M_2max (n1: 1400rpm) (Nm)
90001	4.04 ... 5.12	42410
90002	16.2 ... 32.0	56040
90003	59.3 ... 185.5	76740
90004	224.0 ... 1623.2	100980

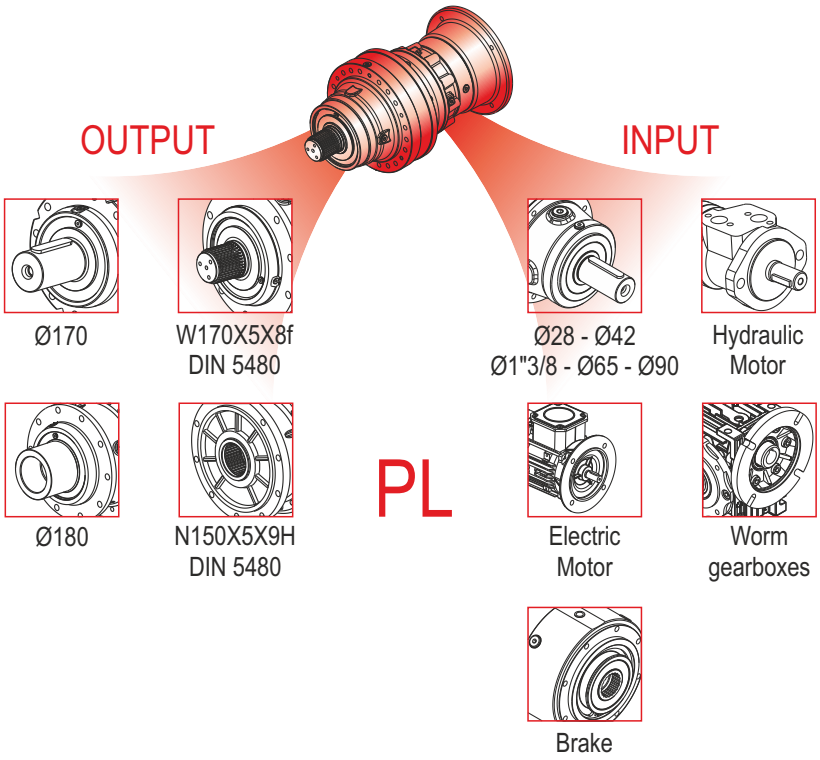

	i_{ges}	M_2max (n1: 1400rpm) (Nm)
90003	49.7 ... 149.3	67660
90004	247.4 ... 1010.0	101480

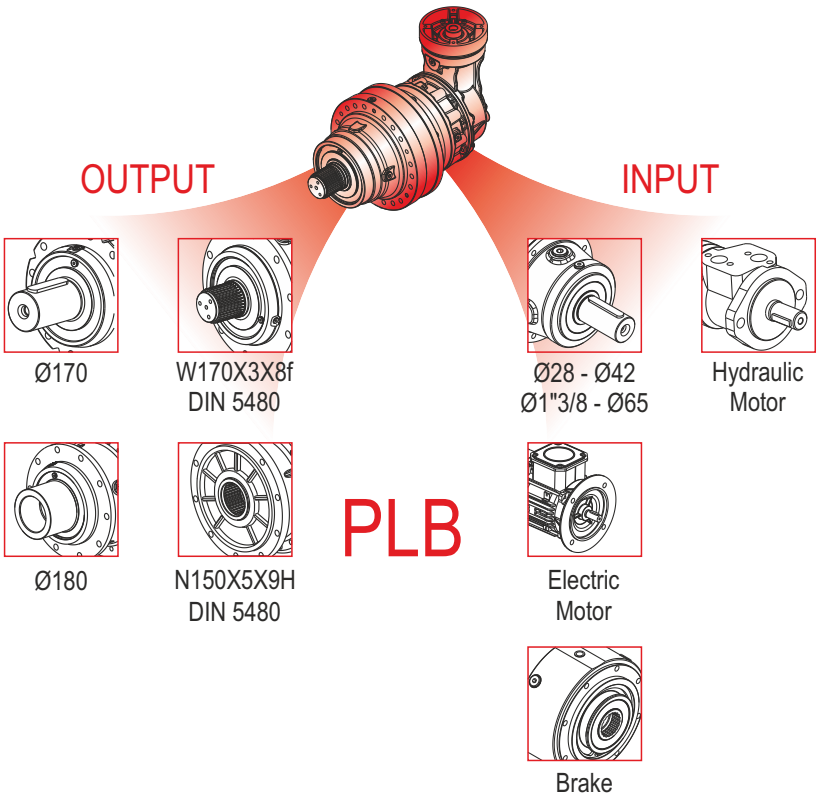

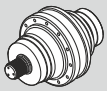	Pt [kW]	n_{1max} [min^{-1}]	i_{ges}	Mc [kNm]				Giriş- Input - Antrieb - Entrata - Entrée - Entrada		
				n_2 x h	n_2 x h	n_2 x h	n_2 x h			
				10.000	20.000	50.000	100.000	IEC (B5)	PMRV / PRV	EL - EML EM - EP - ET
PL 90001	80	750	4.04 5.12	114.09 91.05	100.98 80.58	85.94 68.57	76.06 60.69	160 | 225 180 | 250 200 | 280	-	-
PL 90002	65	1500	16.2 20.5 21.0 26.6 32.0	114.09 91.05 114.09 91.05 91.05	100.98 80.58 100.98 80.58 80.58	85.94 68.57 85.94 68.57 68.57	76.06 60.69 76.06 60.69 60.69	160 | 225 180 | 250 200	-	ET 90
PL 90003	45	2500	59.3 71.6 80.9 93.1 105.1 117.8 121.9 133.1 154.3 185.5	114.09 114.09 114.09 114.09 114.09 91.05 114.09 91.05 91.05 91.05	100.98 100.98 100.98 100.98 100.98 80.58 100.98 80.58 80.58 80.58	85.94 85.94 85.94 85.94 85.94 68.57 85.94 68.57 68.57 68.57	76.06 76.06 76.06 76.06 76.06 60.69 76.06 60.69 60.69 60.69	160 180 200 225	110 130 150	EM 65 EM 1"3/8 Z6 EP 65
PL 90004	30	2800	224.0 244.6 270.6 306.4 355.8 398.3 429.7 462.6 504.1 543.9 585.4 630.8 687.5 742.1 798.3 854.4 926.1 1119.0 1345.0 1623.2	114.09 114.09 114.09 114.09 114.09 114.09 114.09 114.09 91.05 91.05 91.05 114.09 91.05 91.05 91.05 91.05 91.05 91.05 91.05 91.05	100.98 100.98 100.98 100.98 100.98 100.98 100.98 100.98 80.58 80.58 80.58 100.98 80.58 80.58 80.58 80.58 80.58 80.58 80.58 80.58	85.94 85.94 85.94 85.94 85.94 85.94 85.94 85.94 68.57 68.57 68.57 85.94 68.57 68.57 68.57 68.57 68.57 68.57 68.57 68.57	76.06 76.06 76.06 76.06 76.06 76.06 76.06 76.06 60.69 60.69 60.69 76.06 60.69 60.69 60.69 60.69 60.69 60.69 60.69 60.69	63 71 80 90 100 112 132 160 180 200	050 063 075 090 110 130 150	EL C 28 EL C 42 EML 42 EML 1"3/8 Z6 EM 65 EM 1"3/8 Z6 EP 65

	Pt [kW]	n_{1max} [min^{-1}]	i_{ges}	Mc [kNm]				Giriş- Input - Antrieb - Entrata - Entrée - Entrada	
				n_2 x h	n_2 x h	n_2 x h	n_2 x h		
				10.000	20.000	50.000	100.000	IEC (B5)	EL - EML EM - EP - ET
PLB 90003	45	2500	49.7 64.6 81.7 95.5 124.2 149.3	114.09 114.09 91.05 91.05 91.05 91.05	100.98 100.98 80.58 80.58 80.58 80.58	85.94 85.94 68.57 68.57 68.57 68.57	76.06 76.06 60.69 60.69 60.69 60.69	160 180 200 225	EM 65 EM 1"3/8 Z6 EP 65
PLB 90004	30	2800	247.4 266.3 322.9 390.0 419.7 459.6 506.9 572.4 638.5 663.9 724.4 771.2 840.3 1010.0	114.09 114.09 114.09 114.09 114.09 91.05 114.09 114.09 91.05 114.09 91.05 91.05 91.05 91.05	100.98 100.98 100.98 100.98 100.98 80.58 100.98 100.98 80.58 100.98 80.58 80.58 80.58 80.58	85.94 85.94 85.94 85.94 85.94 68.57 85.94 85.94 68.57 85.94 68.57 68.57 68.57 68.57	76.06 76.06 76.06 76.06 76.06 60.69 76.06 76.06 60.69 76.06 60.69 60.69 60.69 60.69	80 90 100 112 132 160 180 200	EL C 28 EL C 42 EML 42 EML 1"3/8 Z6 EM 65 EM 1"3/8 Z6 EP 65

(n_2 x h = 20.000)

$$M_{max} = M_C \times 2$$

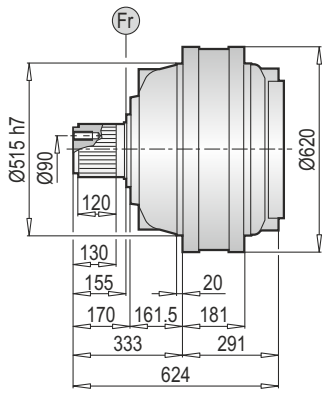

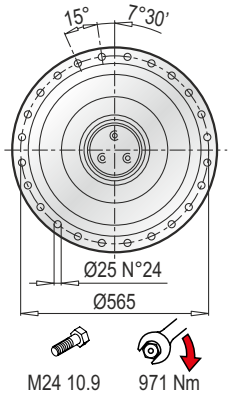

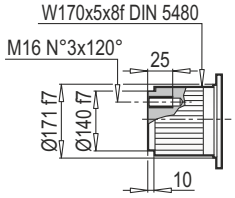

Aksesuarlar
Accessories
Zubehör
Accessori
Accessoires
Accesorios

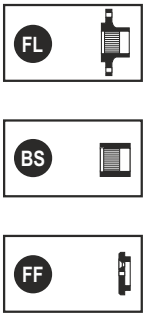

PL 90000 MS - Elektrik Motor Adaptörleri (IEC) / Electric Motor Couplings (IEC) / Anbauvorrichtung Für Elektromotore (IEC) / Predisposizioni Per Motori Elettrici (IEC) / Adaptations Pour Moteurs Electriques (IEC) / Acoplamientos Para Motores Eléctricos (IEC)

PL	IEC 63			IEC 71			IEC 80			IEC 90			IEC 100			IEC 112			IEC 132		
	LT	Z	ØD	LT	Z	ØD	LT	Z	ØD	LT	Z	ØD	LT	Z	ØD	LT	Z	ØD	LT	Z	ØD
90001	-			-			-			-			-			-			-		
90002	-			-			-			-			-			-			-		
90003	-			-			-			-			-			-			-		
90004	662.5	36	140	662.5	36	160	682.5	56	200	682.5	56	200	692.5	66	250	692.5	66	250	726.5	100	300

PL	IEC 160			IEC 180			IEC 200			IEC 225			IEC 250			IEC 280		
	LT	Z	ØD	LT	Z	ØD	LT	Z	ØD	LT	Z	ØD	LT	Z	ØD	LT	Z	ØD
90001	439	148	350	439	148	350	439	148	400	430	139	450	438	147	550	438	147	550
90002	636			636			636			627			635			-		
90003	685	118		685	118		715			715	148		-			-		
90004	765.5	139		765.5	139		788			-			-			-		

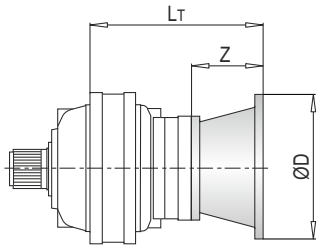

PL	IEC ~ Kg												
	63	71	80	90	100	112	132	160	180	200	225	250	280
90001	-	-	-	-	-	-	-	572	572	577	583	595	597
90002	-	-	-	-	-	-	-	665	665	675	680	721	-
90003	-	-	-	-	-	-	-	692	692	702	707	-	-
90004	686	686	688	688	689	689	693	703	703	713	-	-	-

PL 90000 MS - Giriş Milleri / Input Shafts / Antriebswellen / Alberi Entrata / Arbres D'entree / Ejes De Entrada

PL	EL C 28				EL C 42				EML 42				EML 1"3/8 Z6				EM 65				EM 1"3/8 Z6			
	LT	Z	L	Ød	LT	Z	L	Ød	LT	Z	L	Ød	LT	Z	L	Ød	LT	Z	L	Ød	LT	Z	L	Ød
90002	-				-				-				-				-				-			
90003	-				-				-				-				688.5	121.5	105	65	688.5	121.5	105	1"3/8
90004	690.5	64	50	28	690.5	64	82	42	720.5	94	82	42	720.5	94	106	1"3/8	761.5				761.5			

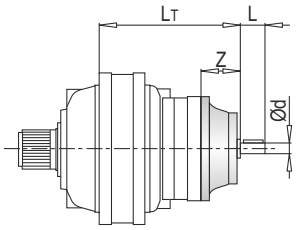

PL	EP 65				ET 90			
	LT	Z	L	Ød	LT	Z	L	Ød
90002	-				662	174	170	90
90003	720	153	105	65	-			
90004	793				-			

PL	~ Kg							
	EL C 28	EL C 42	EML 42	EML 1"3/8 Z6	EM 65	EM 1"3/8 Z6	EP 65	ET 90
90002	-	-	-	-	-	-	-	691
90003	-	-	-	-	687	687	696	-
90004	646.5	647	650	650	658	658	667	-

PL 90000 MS - Sonsuz Dişlili Redüktör Adaptörleri (PMRV/PRV) / Worm Gearbox Adaptors (PMRV/PRV) / Anschluss Für Schneckengetriebe (PMRV/PRV) / Predisposizioni Per Riduttori A Vite Senza Fine (PMRV/PRV) / Adaptation Pour Reducteurs A Vis Sans Fin (PMRV/PRV) / Acoplamiento Para Reductores De Tornillo Sin Fin (PMRV/PRV)

PL	PMRV/PRV 050					PMRV/PRV 063					PMRV/PRV 075				
	LM	l	h	MA	G	LM	l	h	MA	G	LM	l	h	MA	G
90003	-					-					-				
90004	752	50	110	60	80	761.5	63	135	72	95	740.5	75	161	86	112.5

PL	PMRV/PRV 090					PMRV/PRV 110					PMRV/PRV 130				
	LM	l	h	MA	G	LM	l	h	MA	G	LM	l	h	MA	G
90003	-					705	110	237.5	127.5	160	712.5	130	277.5	147.5	180
90004	750.5	90	193	103	129.5	778					785.5				

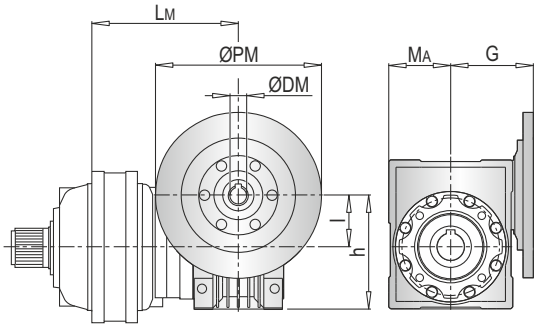

PL	PMRV/PRV 150				
	LM	l	h	MA	G
90003	727	150	320	170	210
90004	800				

PL	PMRV/PRV ~ Kg						
	050	063	075	090	110	130	150
90003	-	-	-	-	716	733	769
90004	689	692.5	695	700	727	744	780

ØPM
ØDM
105

PLB 90000 MS - Elektrik Motor Adaptörleri (IEC) / Electric Motor Couplings (IEC) / Anbauvorrichtung Für Elektromotore (IEC) / Predisposizioni Per Motori Elettrici (IEC) / Adaptations Pour Moteurs Electriques (IEC) / Acoplamientos Para Motores Eléctricos (IEC)

PLB	IEC 80				IEC 90				IEC 100				IEC 112				IEC 132			
	A	LT	Z	ØD	A	LT	Z	ØD	A	LT	Z	ØD	A	LT	Z	ØD	A	LT	Z	ØD
90003	-				-				-				-				-			
90004	655	296	56	200	655	296	56	200	655	306	66	250	655	306	66	250	655	340	100	300

PLB	IEC 160				IEC 180				IEC 200				IEC 225			
	A	LT	Z	ØD	A	LT	Z	ØD	A	LT	Z	ØD	A	LT	Z	ØD
90003	553	433	118	350	553	433	118	350	553	463	148	400	553	463	148	450
90004	655	379	139		655	379	139		655	409			-			

PLB	IEC ~ Kg								
	80	90	100	112	132	160	180	200	225
90003	-	-	-	-	-	729	729	739	744
90004	688	688	689	689	693	750	750	760	-

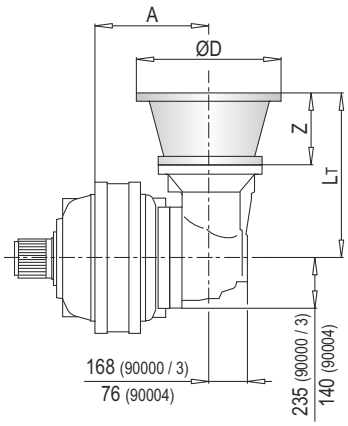

103

PLB 90000 MS - Giriş Milleri / Input Shafts / Antriebswellen / Alberi Entrata / Arbres D'entree / Ejes De Entrada

PLB	EL C 28					EL C 42					EML 42					EML 1"3/8 Z6					EM 65				
	A	LT	Z	L	Ød	A	LT	Z	L	Ød	A	LT	Z	L	Ød	A	LT	Z	L	Ød	A	LT	Z	L	Ød
90003	-					-					-					-					553	436.5	121.5	105	65
90004	655	304	64	50	28	655	304	64	82	42	655	334	94	82	42	655	334	94	106	1"3/8	655	377.5			

PLB	EM 1"3/8 Z6					EP 65				
	A	LT	Z	L	Ød	A	LT	Z	L	Ød
90003	553	436.5	121.5	105	1"3/8	553	468	153	105	65
90004	655	377.5				655	409			

PLB	~ Kg						
	EL C 28	EL C 42	EML 42	EML 1"3/8 Z6	EM 65	EM 1"3/8 Z6	EP 65
90003	-	-	-	-	724	724	733
90004	733.5	734	737	737	745	745	754

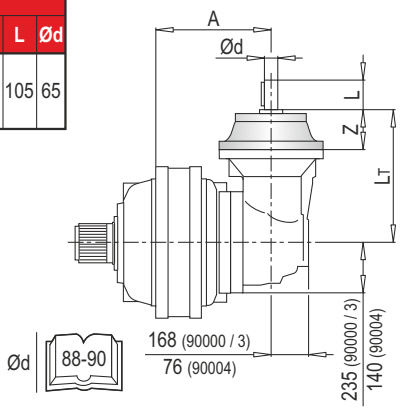

Ød 88-90

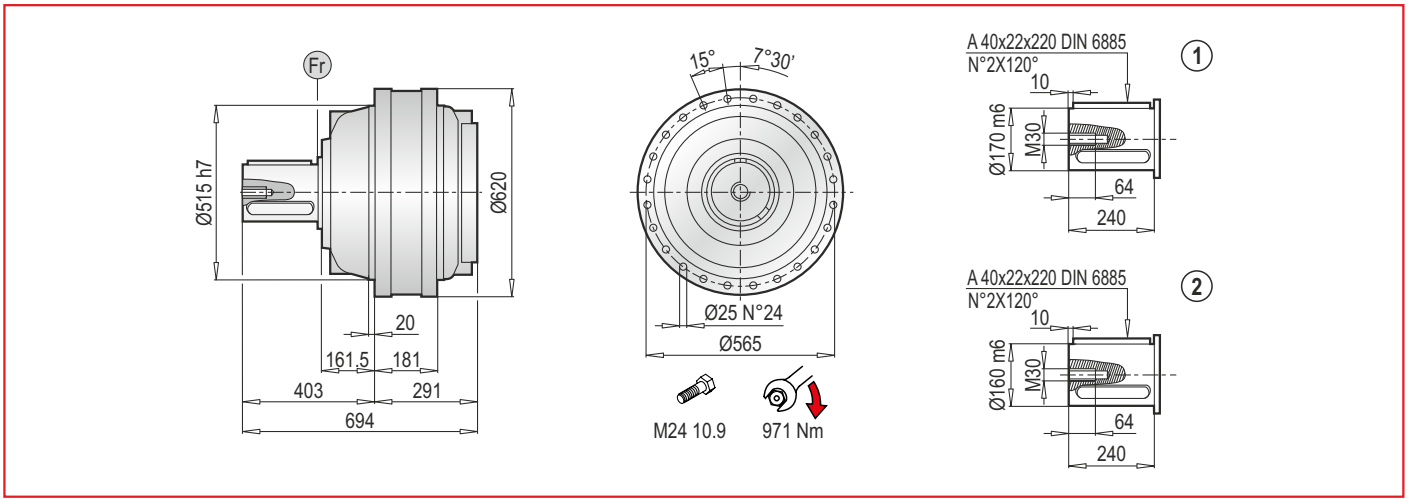

PL 90000 MC - Elektrik Motor Adaptörleri (IEC) / Electrıc Motor Couplings (IEC) / Anbauvorrichtung Für Elektromotore (IEC) / Predisposizioni Per Motori Elettrici (IEC) / Adaptations Pour Moteurs Electriques (IEC) / Acoplamientos Para Motores Eléctricos (IEC)

PL	IEC 63			IEC 71			IEC 80			IEC 90			IEC 100			IEC 112			IEC 132		
	LT	Z	ØD	LT	Z	ØD	LT	Z	ØD	LT	Z	ØD	LT	Z	ØD	LT	Z	ØD	LT	Z	ØD
90001	-			-			-			-			-			-			-		
90002	-			-			-			-			-			-			-		
90003	-			-			-			-			-			-			-		
90004	662.5	36	140	662.5	36	160	682.5	56	200	682.5	56	200	692.5	66	250	692.5	66	250	726.5	100	300

PL	IEC 160			IEC 180			IEC 200			IEC 225			IEC 250			IEC 280		
	LT	Z	ØD	LT	Z	ØD	LT	Z	ØD	LT	Z	ØD	LT	Z	ØD	LT	Z	ØD
90001	439	148	350	439	148	350	439	148	400	430	139	450	438	147	550	438	147	550
90002	636			636			636			627			635			-		
90003	685	118		685	118		715	148		715	148		-			-		
90004	765.5	139		765.5	139		788			-			-			-		

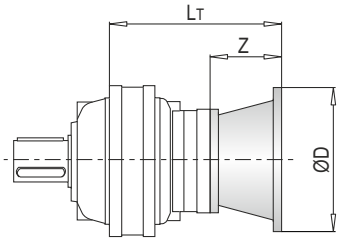

PL	IEC ~ Kg												
	63	71	80	90	100	112	132	160	180	200	225	250	280
90001	-	-	-	-	-	-	-	572	572	577	583	595	597
90002	-	-	-	-	-	-	-	665	665	675	680	721	-
90003	-	-	-	-	-	-	-	692	692	702	707	-	-
90004	686	686	688	688	689	689	693	703	703	713	-	-	-

PL 90000 MC - Giriş Milleri / Input Shafts / Antriebswellen / Alberi Entrata / Arbres D'entree / Ejes De Entrada

PL	EL C 28				EL C 42				EML 42				EML 1"3/8 Z6				EM 65				EM 1"3/8 Z6			
	LT	Z	L	Ød	LT	Z	L	Ød	LT	Z	L	Ød	LT	Z	L	Ød	LT	Z	L	Ød	LT	Z	L	Ød
90002	-				-				-				-				-				-			
90003	-				-				-				-				688.5	121.5	105	65	688.5	121.5	105	1"3/8
90004	690.5	64	50	28	690.5	64	82	42	720.5	94	82	42	720.5	94	106	1"3/8	761.5				761.5			

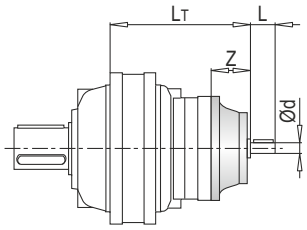

PL	EP 65				ET 90			
	LT	Z	L	Ød	LT	Z	L	Ød
90002	-				662	174	170	90
90003	720	153	105	65	-			
90004	793				-			

PL	~ Kg							
	EL C 28	EL C 42	EML 42	EML 1"3/8 Z6	EM 65	EM 1"3/8 Z6	EP 65	ET 90
90002	-	-	-	-	-	-	-	691
90003	-	-	-	-	687	687	696	-
90004	646.5	647	650	650	658	658	667	-

PL 90000 MC - Sonsuz Dişlili Redüktör Adaptörleri (PMRV/PRV) / Worm Gearbox Adaptors (PMRV/PRV) / Anschluss Für Schneckengetriebe (PMRV/PRV) / Predisposizioni Per Riduttori A Vite Senza Fine (PMRV/PRV) / Adaptation Pour Reducteurs A Vis Sans Fin (PMRV/PRV) / Acoplamiento Para Reductores De Tornillo Sin Fin (PMRV/PRV)

PL	PMRV/PRV 050					PMRV/PRV 063					PMRV/PRV 075				
	LM	l	h	MA	G	LM	l	h	MA	G	LM	l	h	MA	G
90003	-					-					-				
90004	752	50	110	60	80	761.5	63	135	72	95	740.5	75	161	86	112.5

PL	PMRV/PRV 090					PMRV/PRV 110					PMRV/PRV 130				
	LM	l	h	MA	G	LM	l	h	MA	G	LM	l	h	MA	G
90003	-					705	110	237.5	127.5	160	712.5	130	277.5	147.5	180
90004	750.5	90	193	103	129.5	778					785.5				

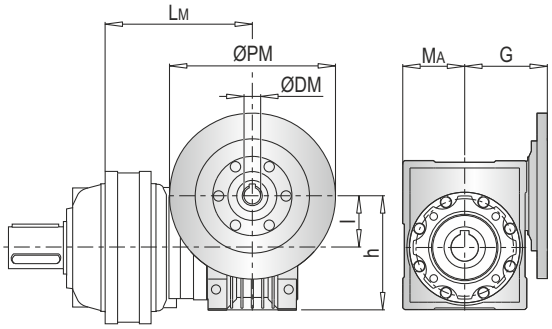

PL	PMRV/PRV 150				
	LM	l	h	MA	G
90003	727	150	320	170	210
90004	800				

PL	PMRV/PRV ~ Kg						
	050	063	075	090	110	130	150
90003	-	-	-	-	716	733	769
90004	689	692.5	695	700	727	744	780

ØPM
ØDM
105

PLB 90000 MC - Elektrik Motor Adaptörleri (IEC) / Electric Motor Couplings (IEC) / Anbauvorrichtung Für Elektromotore (IEC) / Predisposizioni Per Motori Elettrici (IEC) / Adaptations Pour Moteurs Electriques (IEC) / Acoplamientos Para Motores Eléctricos (IEC)

PLB	IEC 80				IEC 90				IEC 100				IEC 112				IEC 132			
	A	LT	Z	ØD	A	LT	Z	ØD	A	LT	Z	ØD	A	LT	Z	ØD	A	LT	Z	ØD
90003	-				-				-				-				-			
90004	655	296	56	200	655	296	56	200	655	306	66	250	655	306	66	250	655	340	100	300

PLB	IEC 160				IEC 180				IEC 200				IEC 225			
	A	LT	Z	ØD	A	LT	Z	ØD	A	LT	Z	ØD	A	LT	Z	ØD
90003	553	433	118	350	553	433	118	350	553	463	148	400	553	463	148	550
90004	655	379	139		655	379	139		655	409			-			

PLB	IEC ~ Kg								
	80	90	100	112	132	160	180	200	225
90003	-	-	-	-	-	729	729	739	744
90004	688	688	689	689	693	750	750	760	-

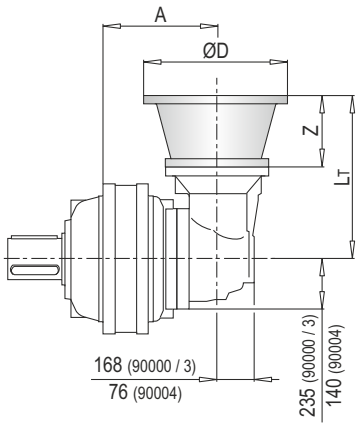

103

PLB 90000 MC - Giriş Milleri / Input Shafts / Antriebswellen / Alberi Entrata / Arbres D'entree / Ejes De Entrada

PLB	EL C 28					EL C 42					EML 42					EML 1"3/8 Z6					EM 65				
	A	LT	Z	L	Ød	A	LT	Z	L	Ød	A	LT	Z	L	Ød	A	LT	Z	L	Ød	A	LT	Z	L	Ød
90003	-					-					-					-					553	436.5	121.5	105	65
90004	655	304	64	50	28	655	304	64	82	42	655	334	94	82	42	655	334	94	106	1"3/8	655	377.5			

PLB	EM 1"3/8 Z6					EP 65				
	A	LT	Z	L	Ød	A	LT	Z	L	Ød
90003	553	436.5	121.5	105	1"3/8	553	468	153	105	65
90004	655	377.5				655	409			

PLB	~ Kg						
	EL C 28	EL C 42	EML 42	EML 1"3/8 Z6	EM 65	EM 1"3/8 Z6	EP 65
90003	-	-	-	-	724	724	733
90004	733.5	734	737	737	745	745	754

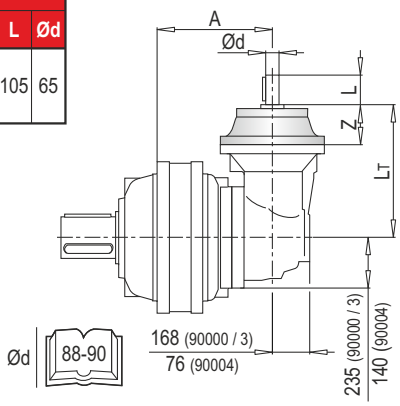

Ød 88-90

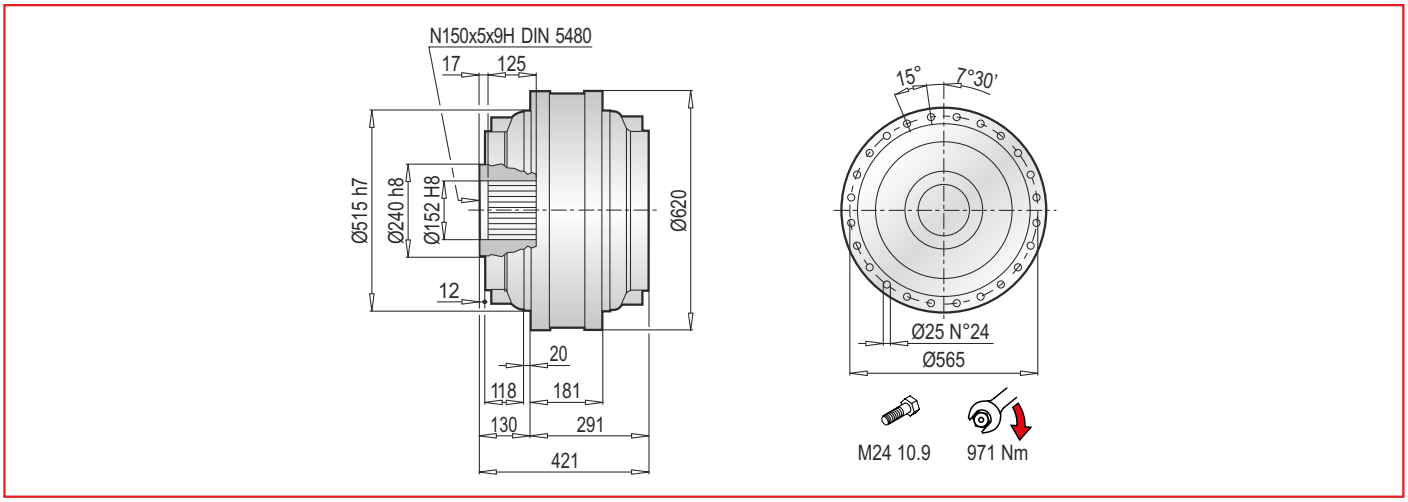

PL 90000 F - Elektrik Motor Adaptörleri (IEC) / Electric Motor Couplings (IEC) / Anbauvorrichtung Für Elektromotore (IEC) / Predisposizioni Per Motori Elettrici (IEC) / Adaptations Pour Moteurs Electriques (IEC) / Acoplamientos Para Motores Eléctricos (IEC)

PL	IEC 63			IEC 71			IEC 80			IEC 90			IEC 100			IEC 112			IEC 132		
	LT	Z	ØD	LT	Z	ØD	LT	Z	ØD	LT	Z	ØD	LT	Z	ØD	LT	Z	ØD	LT	Z	ØD
90001	-			-			-			-			-			-			-		
90002	-			-			-			-			-			-			-		
90003	-			-			-			-			-			-			-		
90004	662.5	36	140	662.5	36	160	682.5	56	200	682.5	56	200	692.5	66	250	692.5	66	250	726.5	100	300

PL	IEC 160			IEC 180			IEC 200			IEC 225			IEC 250			IEC 280		
	LT	Z	ØD	LT	Z	ØD	LT	Z	ØD	LT	Z	ØD	LT	Z	ØD	LT	Z	ØD
90001	439	148	350	439	148	350	439	148	400	430	139	450	438	147	550	438	147	550
90002	636			636			636			627			635			-		
90003	685	118		685	118		715			715	148		-			-		
90004	765.5	139		765.5	139		788			-			-			-		

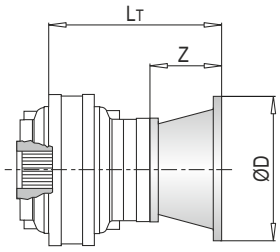

PL	IEC ~ Kg												
	63	71	80	90	100	112	132	160	180	200	225	250	280
90001	-	-	-	-	-	-	-	572	572	477	483	495	497
90002	-	-	-	-	-	-	-	569	569	579	584	625	-
90003	-	-	-	-	-	-	-	596	596	606	611	-	-
90004	590	590	592	592	593	593	597	607	607	617	-	-	-

PL 90000 F - Giriş Milleri / Input Shafts / Antriebswellen / Alberi Entrata / Arbres D'entree / Ejes De Entrada

PL	EL C 28				EL C 42				EML 42				EML 1"3/8 Z6				EM 65				EM 1"3/8 Z6			
	LT	Z	L	Ød	LT	Z	L	Ød	LT	Z	L	Ød	LT	Z	L	Ød	LT	Z	L	Ød	LT	Z	L	Ød
90002	-				-				-				-				-				-			
90003	-				-				-				-				688.5	121.5	105	65	688.5	121.5	105	1"3/8
90004	690.5	64	50	28	690.5	64	82	42	720.5	94	82	42	720.5	94	106	1"3/8	761.5				761.5			

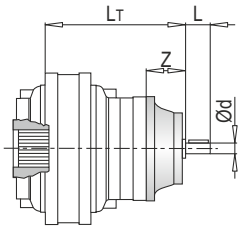

PL	EP 65				ET 90			
	LT	Z	L	Ød	LT	Z	L	Ød
90002	-				662	174	170	90
90003	720	153	105	65	-			
90004	793				-			

PL	~ Kg							
	EL C 28	EL C 42	EML 42	EML 1"3/8 Z6	EM 65	EM 1"3/8 Z6	EP 65	ET 90
90002	-	-	-	-	-	-	-	595
90003	-	-	-	-	591	591	600	-
90004	432.5	433	436	436	444	444	453	-

PL 90000 F - Sonsuz Dişlili Redüktör Adaptörleri (PMRV/PRV) / Worm Gearbox Adaptors (PMRV/PRV) / Anschluss Für Schneckengetriebe (PMRV/PRV) / Predisposizioni Per Riduttori A Vite Senza Fine (PMRV/PRV) / Adaptation Pour Reducteurs A Vis Sans Fin (PMRV/PRV) / Acoplamiento Para Reductores De Tornillo Sin Fin (PMRV/PRV)

PL	PMRV/PRV 050					PMRV/PRV 063					PMRV/PRV 075				
	LM	l	h	MA	G	LM	l	h	MA	G	LM	l	h	MA	G
90003	-					-					-				
90004	752	50	110	60	80	761.5	63	135	72	95	740.5	75	161	86	112.5

PL	PMRV/PRV 090					PMRV/PRV 110					PMRV/PRV 130				
	LM	l	h	MA	G	LM	l	h	MA	G	LM	l	h	MA	G
90003	-					705	110	237.5	127.5	160	712.5	130	277.5	147.5	180
90004	750.5	90	193	103	129.5	778					785.5				

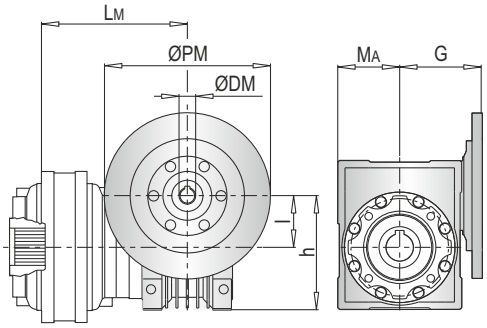

PL	PMRV/PRV 150				
	LM	l	h	MA	G
90003	727	150	320	170	210
90004	800				

PL	PMRV/PRV ~ Kg						
	050	063	075	090	110	130	150
90003	-	-	-	-	620	637	673
90004	593	596.5	599	604	631	648	684

ØPM
ØDM
105

PLB 90000 F - Elektrik Motor Adaptörleri (IEC) / Electric Motor Couplings (IEC) /Anbauvorrichtung Für Elektromotore (IEC) / Predisposizioni Per Motori Elettrici (IEC) / Adaptations Pour Moteurs Electriques (IEC) /Acoplamientos Para Motores Eléctricos (IEC)

PLB	IEC 80				IEC 90				IEC 100				IEC 112				IEC 132			
	A	LT	Z	ØD	A	LT	Z	ØD	A	LT	Z	ØD	A	LT	Z	ØD	A	LT	Z	ØD
90003	-				-				-				-				-			
90004	655	296	56	200	655	296	56	200	655	306	66	250	655	306	66	250	655	340	100	300

PLB	IEC 160				IEC 180				IEC 200				IEC 225			
	A	LT	Z	ØD	A	LT	Z	ØD	A	LT	Z	ØD	A	LT	Z	ØD
90003	553	433	118	350	553	433	118	350	553	463	148	400	553	463	148	450
90004	655	379	139		655	379	139		655	409			-			

PLB	IEC ~ Kg								
	80	90	100	112	132	160	180	200	225
90003	-	-	-	-	-	633	633	643	648
90004	639	639	640	640	644	654	654	664	-

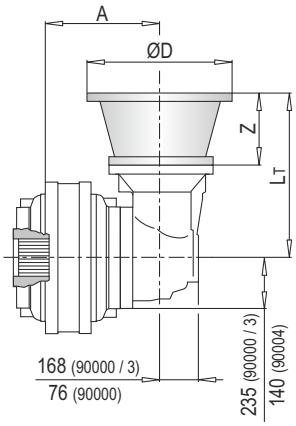

103

PLB 90000 F - Giriş Milleri / Input Shafts / Antriebswellen / Alberi Entrata / Arbres D'entree / Ejes De Entrada

PLB	EL C 28					EL C 42					EML 42					EML 1"3/8 Z6					EM 65				
	A	LT	Z	L	Ød	A	LT	Z	L	Ød	A	LT	Z	L	Ød	A	LT	Z	L	Ød	A	LT	Z	L	Ød
90003	-					-					-					-					553	436.5	121.5	105	65
90004	655	304	64	50	28	655	304	64	82	42	655	334	94	82	42	655	334	94	106	1"3/8	655	377.5			

PLB	EM 1"3/8 Z6					EP 65				
	A	LT	Z	L	Ød	A	LT	Z	L	Ød
90003	553	436.5	121.5	105	1"3/8	553	468	153	105	65
90004	655	377.5				655	409			

PLB	~ Kg						
	EL C 28	EL C 42	EML 42	EML 1"3/8 Z6	EM 65	EM 1"3/8 Z6	EP 65
90003	-	-	-	-	628	628	637
90004	637.5	638	641	641	649	649	658

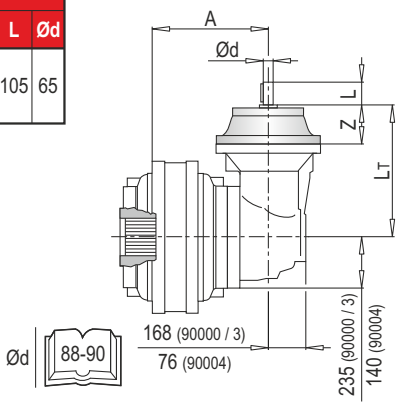

Ød 88-90

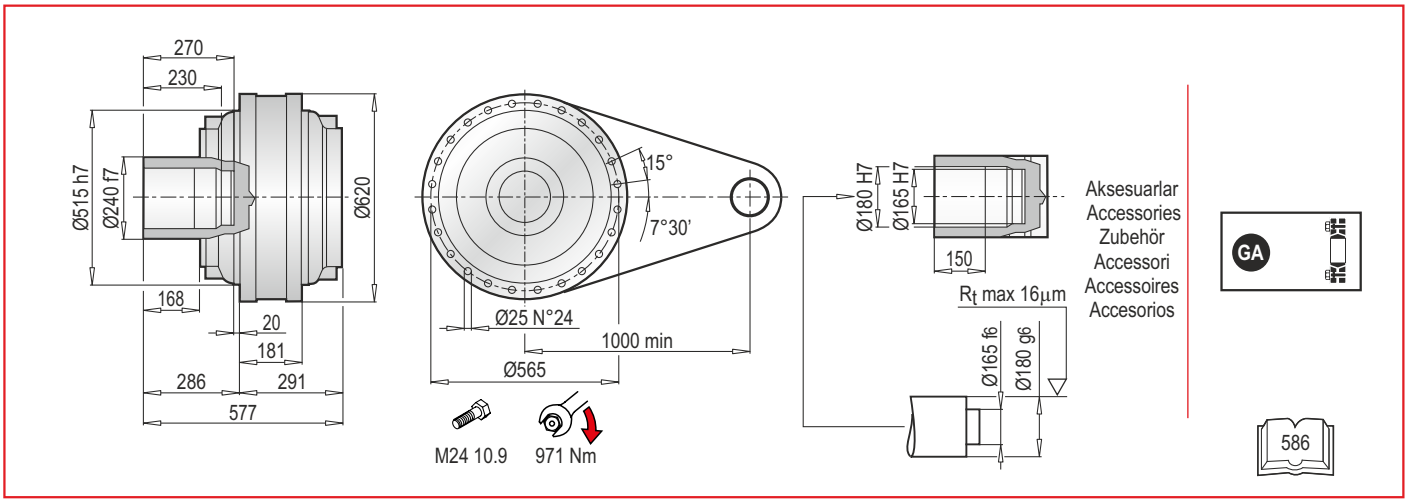

PL 90000 FS - Elektrik Motor Adaptörleri (IEC) / Electric Motor Couplings (IEC) /Anbauvorrichtung Für Elektromotore (IEC) / Predisposizioni Per Motori Elettrici (IEC) / Adaptations Pour Moteurs Electriques (IEC) /Acoplamientos Para Motores Eléctricos (IEC)

PL	IEC 63			IEC 71			IEC 80			IEC 90			IEC 100			IEC 112			IEC 132		
	LT	Z	ØD	LT	Z	ØD	LT	Z	ØD	LT	Z	ØD	LT	Z	ØD	LT	Z	ØD	LT	Z	ØD
90001	-			-			-			-			-			-			-		
90002	-			-			-			-			-			-			-		
90003	-			-			-			-			-			-			-		
90004	662.5	36	140	662.5	36	160	682.5	56	200	682.5	56	200	692.5	66	250	692.5	66	250	726.5	100	300

PL	IEC 160			IEC 180			IEC 200			IEC 225			IEC 250			IEC 280		
	LT	Z	ØD	LT	Z	ØD	LT	Z	ØD	LT	Z	ØD	LT	Z	ØD	LT	Z	ØD
90001	439	148	350	439	148	350	439	148	400	430	139	450	438	147	550	438	147	550
90002	636			636			636			627			635			-		
90003	685	118		685	118		715			715	148		-			-		
90004	765.5	139		765.5	139		788			-			-			-		

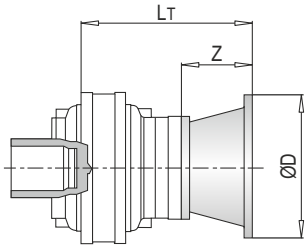

PL	IEC ~ Kg												
	63	71	80	90	100	112	132	160	180	200	225	250	280
90001	-	-	-	-	-	-	-	494	494	499	505	517	519
90002	-	-	-	-	-	-	-	591	591	601	606	647	-
90003	-	-	-	-	-	-	-	618	618	628	633	-	-
90004	612	612	614	614	615	615	619	629	629	639	-	-	-

PL 90000 FS - Giriş Milleri / Input Shafts / Antriebswellen / Alberi Entrata / Arbres D'entree / Ejes De Entrada

PL	EL C 28				EL C 42				EML 42				EML 1"3/8 Z6				EM 65				EM 1"3/8 Z6			
	LT	Z	L	Ød	LT	Z	L	Ød	LT	Z	L	Ød	LT	Z	L	Ød	LT	Z	L	Ød	LT	Z	L	Ød
90002	-				-				-				-				-				-			
90003	-				-				-				-				688.5	121.5	105	65	688.5	121.5	105	1"3/8
90004	690.5	64	50	28	690.5	64	82	42	720.5	94	82	42	720.5	94	106	1"3/8	761.5				761.5			

PL	EP 65				ET 90			
	LT	Z	L	Ød	LT	Z	L	Ød
90002	-				662	174	170	90
90003	720	153	105	65	-			
90004	793				-			

PL	~ Kg							
	EL C 28	EL C 42	EML 42	EML 1"3/8 Z6	EM 65	EM 1"3/8 Z6	EP 65	ET 90
90002	-	-	-	-	-	-	-	617
90003	-	-	-	-	613	613	622	-
90004	612.5	613	616	616	624	624	633	-

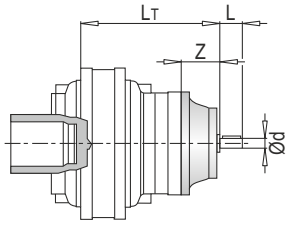

PL 90000 FS - Sonsuz Dişlili Redüktör Adaptörleri (PMRV/PRV) / Worm Gearbox Adaptors (PMRV/PRV) / Anschluss Für Schneckengetriebe (PMRV/PRV) / Predisposizioni Per Riduttori A Vite Senza Fine (PMRV/PRV) / Adaptation Pour Reducteurs A Vis Sans Fin (PMRV/PRV) / Acoplamiento Para Reductores De Tornillo Sin Fin (PMRV/PRV)

PL	PMRV/PRV 050					PMRV/PRV 063					PMRV/PRV 075				
	LM	l	h	MA	G	LM	l	h	MA	G	LM	l	h	MA	G
90003	-					-					-				
90004	752	50	110	60	80	761.5	63	135	72	95	740.5	75	161	86	112.5

PL	PMRV/PRV 090					PMRV/PRV 110					PMRV/PRV 130				
	LM	l	h	MA	G	LM	l	h	MA	G	LM	l	h	MA	G
90003	-					705	110	237.5	127.5	160	712.5	130	277.5	147.5	180
90004	750.5	90	193	103	129.5	778					785.5				

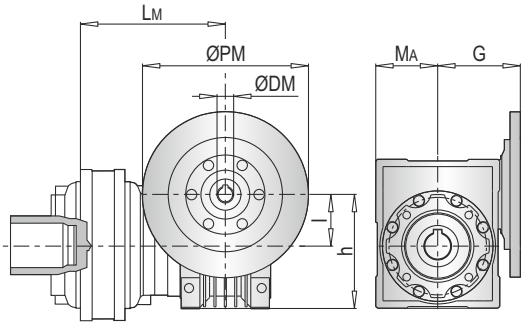

PL	PMRV/PRV 150				
	LM	l	h	MA	G
90003	727	150	320	170	210
90004	800				

PL	PMRV/PRV ~ Kg						
	050	063	075	90	110	130	150
90003	-	-	-	-	642	659	695
90004	615	618.5	621	626	653	670	706

ØPM
ØDM
105

PLB 90000 FS - Elektrik Motor Adaptörleri (IEC) / Electric Motor Couplings (IEC) / Anbauvorrichtung Für Elektromotore (IEC) / Predisposizioni Per Motori Elettrici (IEC) / Adaptations Pour Moteurs Electriques (IEC) / Acoplamientos Para Motores Eléctricos (IEC)

PLB	IEC 80				IEC 90				IEC 100				IEC 112				IEC 132			
	A	LT	Z	ØD	A	LT	Z	ØD	A	LT	Z	ØD	A	LT	Z	ØD	A	LT	Z	ØD
90003	-				-				-				-				-			
90004	655	296	56	200	655	296	56	200	655	306	66	250	655	306	66	250	655	340	100	300

PLB	IEC 160				IEC 180				IEC 200				IEC 225			
	A	LT	Z	ØD	A	LT	Z	ØD	A	LT	Z	ØD	A	LT	Z	ØD
90003	553	433	118	350	553	433	118	350	553	463	148	400	553	463	148	400
90004	655	379	139		655	379	139		655	409			-			

PLB	IEC ~ Kg								
	80	90	100	112	132	160	180	200	225
90003	-	-	-	-	-	655	655	665	670
90004	661	661	662	662	666	676	676	686	-

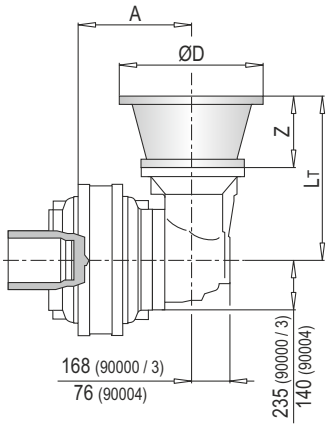

103

PLB 90000 FS - Giriş Milleri / Input Shafts / Antriebswellen / Alberi Entrata / Arbres D'entree / Ejes De Entrada

PLB	EL C 28					EL C 42					EML 42					EML 1"3/8 Z6					EM 65				
	A	LT	Z	L	Ød	A	LT	Z	L	Ød	A	LT	Z	L	Ød	A	LT	Z	L	Ød	A	LT	Z	L	Ød
90003	-					-					-					-					553	436.5	121.5	105	65
90004	655	304	64	50	28	655	304	64	82	42	655	334	94	82	42	655	334	94	106	1"3/8	655	377.5			

PLB	EM 1"3/8 Z6					EP 65				
	A	LT	Z	L	Ød	A	LT	Z	L	Ød
90003	553	436.5	121.5	105	1"3/8	553	468	153	105	65
90004	655	377.5				655	409			

PLB	~ Kg						
	EL C 28	EL C 42	EML 42	EML 1"3/8 Z6	EM 65	EM 1"3/8 Z6	EP 65
90003	-	-	-	-	650	650	658
90004	659.5	660	663	663	671	671	680

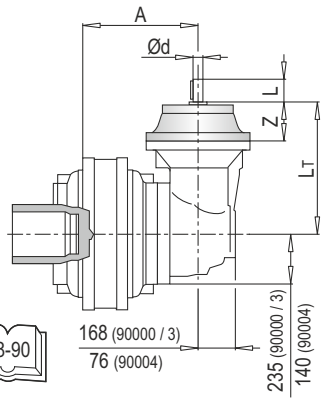

Ød
88-90

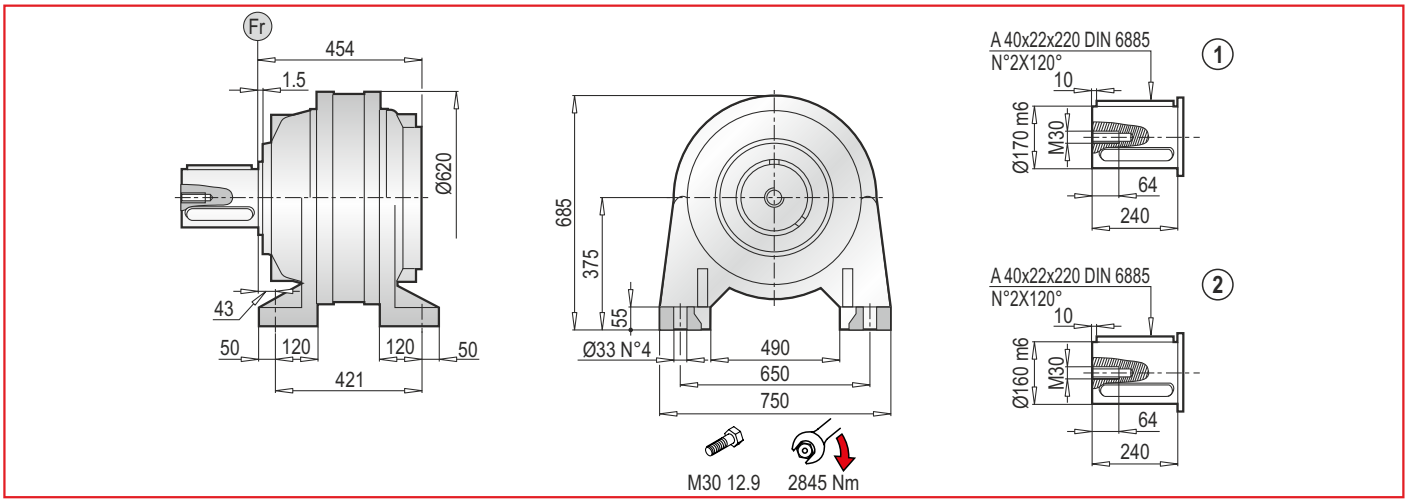

PL 90000 CPC - Elektrik Motor Adaptörleri (IEC) / Electrıc Motor Couplings (IEC) / Anbauvorrichtung Für Elektromotore (IEC) / Predisposizioni Per Motori Elettrici (IEC) / Adaptations Pour Moteurs Electriques (IEC) / Acoplamientos Para Motores Eléctricos (IEC)

PL	IEC 63			IEC 71			IEC 80			IEC 90			IEC 100			IEC 112			IEC 132		
	LT	Z	ØD	LT	Z	ØD	LT	Z	ØD	LT	Z	ØD	LT	Z	ØD	LT	Z	ØD	LT	Z	ØD
90001	-			-			-			-			-			-			-		
90002	-			-			-			-			-			-			-		
90003	-			-			-			-			-			-			-		
90004	825.5	36	140	825.5	36	160	845.5	56	200	845.5	56	200	855.5	66	250	855.5	66	250	889.5	100	300

PL	IEC 160			IEC 180			IEC 200			IEC 225			IEC 250			IEC 280		
	LT	Z	ØD	LT	Z	ØD	LT	Z	ØD	LT	Z	ØD	LT	Z	ØD	LT	Z	ØD
90001	602	148	350	602	148	350	602	148	400	593	139	450	601	139	550	601	147	550
90002	799			799			799			790			798			-		
90003	848	118		848	118		878			878	148		-			-		
90004	928.5	139		928.5	139		951			-			-			-		

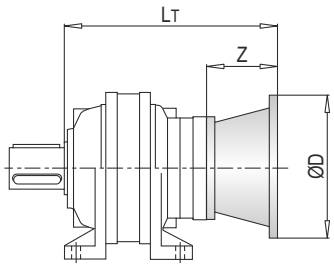

PL	IEC ~ Kg												
	63	71	80	90	100	112	132	160	180	200	225	250	280
90001	-	-	-	-	-	-	-	744	744	749	755	767	769
90002	-	-	-	-	-	-	-	839	839	849	854	895	-
90003	-	-	-	-	-	-	-	866	866	876	881	-	-
90004	860	860	862	862	863	863	867	877	877	887	-	-	-

PL 90000 CPC - Giriş Milleri / Input Shafts / Antriebswellen / Alberi Entrata / Arbres D'entree / Ejes De Entrada

PL	EL C 28				EL C 42				EML 42				EML 1"3/8 Z6				EM 65				EM 1"3/8 Z6			
	LT	Z	L	Ød	LT	Z	L	Ød	LT	Z	L	Ød	LT	Z	L	Ød	LT	Z	L	Ød	LT	Z	L	Ød
90002	-				-				-				-				-				-			
90003	-				-				-				-				851.5	121.5	105	65	851.5	121.5	105	1"3/8
90004	853.5	64	50	28	853.5	64	82	42	883.5	94	82	42	883.5	94	106	1"3/8	924.5				924.5			

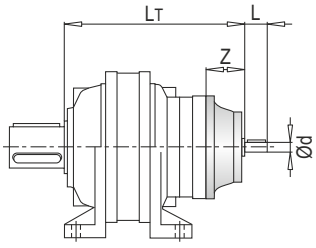

PL	EP 65				ET 90			
	LT	Z	L	Ød	LT	Z	L	Ød
90002	-				825	174	170	90
90003	883	153	105	65	-			
90004	956				-			

PL	~ Kg							
	EL C 28	EL C 42	EML 42	EML 1"3/8 Z6	EM 65	EM 1"3/8 Z6	EP 65	ET 90
90002	-	-	-	-	-	-	-	865
90003	-	-	-	-	861	861	870	-
90004	860.5	861	864	864	872	872	881	-

PL 90000 CPC - Sonsuz Dişlili Redüktör Adaptörleri (PMRV/PRV) / Worm Gearbox Adaptors (PMRV/PRV) / Anschluss Für Schneckengetriebe (PMRV/PRV) / Predisposizioni Per Riduttori A Vite Senza Fine (PMRV/PRV) / Adaptation Pour Reducteurs A Vis Sans Fin (PMRV/PRV) / Acoplamiento Para Reductores De Tornillo Sin Fin (PMRV/PRV)

PL	PMRV/PRV 050					PMRV/PRV 063					PMRV/PRV 075				
	LM	l	h	MA	G	LM	l	h	MA	G	LM	l	h	MA	G
90003	-					-					-				
90004	915	50	110	60	80	924.5	63	135	72	95	903.5	75	161	86	112.5

PL	PMRV/PRV 090					PMRV/PRV 110					PMRV/PRV 130				
	LM	l	h	MA	G	LM	l	h	MA	G	LM	l	h	MA	G
90003	-					868	110	237.5	127.5	160	875.5	130	277.5	147.5	180
90004	913.5	90	193	63	129.5	941					948.5				

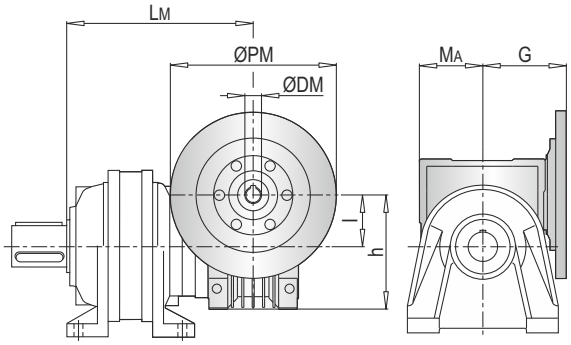

PL	PMRV/PRV 150				
	LM	l	h	MA	G
90003	890	150	320	170	210
90004	963				

PL	PMRV/PRV ~ Kg						
	050	063	075	090	110	130	150
90003	-	-	-	-	890	907	943
90004	863	866.5	869	874	901	918	954

ØPM
ØDM
105

PLB 90000 CPC - Elektrik Motor Adaptörleri (IEC) / Electric Motor Couplings (IEC) / Anbauvorrichtung Für Elektromotore (IEC) / Predisposizioni Per Motori Elettrici (IEC) / Adaptations Pour Moteurs Electriques (IEC) / Acoplamientos Para Motores Eléctricos (IEC)

PLB	IEC 80				IEC 90				IEC 100				IEC 112				IEC 132			
	A	LT	Z	ØD	A	LT	Z	ØD	A	LT	Z	ØD	A	LT	Z	ØD	A	LT	Z	ØD
90003	-				-				-				-				-			
90004	818	296	56	200	818	296	56	200	818	306	66	250	818	306	66	250	818	340	100	300

PLB	IEC 160				IEC 180				IEC 200				IEC 225			
	A	LT	Z	ØD	A	LT	Z	ØD	A	LT	Z	ØD	A	LT	Z	ØD
90003	716	433	118	350	716	433	118	350	716	463	148	400	716	463	148	400
90004	818	379	139		818	379	139		818	409			-			

PLB	IEC ~ Kg							
	80	90	100	112	132	160	180	200
90003	-	-	-	-	-	903	903	913
90004	909	909	910	910	914	924	924	934

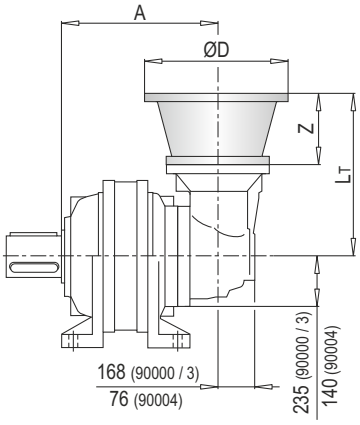

103

PLB 90000 CPC - Giriş Milleri / Input Shafts / Antriebswellen / Alberi Entrata / Arbres D'entree / Ejes De Entrada

PLB	EL C 28					EL C 42					EML 42					EML 1"3/8 Z6					EM 65				
	A	LT	Z	L	Ød	A	LT	Z	L	Ød	A	LT	Z	L	Ød	A	LT	Z	L	Ød	A	LT	Z	L	Ød
90003	-					-					-					-					716	436.5	121.5	105	65
90004	818	304	64	50	28	818	304	64	82	42	818	334	94	82	42	818	334	94	106	1"3/8	818	377.5			

PLB	EM 1"3/8 Z6					EP 65				
	A	LT	Z	L	Ød	A	LT	Z	L	Ød
90002	716	436.5	121.5	105	1"3/8	716	468	153	105	65
90003	818	377.5				818	409			

PLB	~ Kg						
	EL C 28	EL C 42	EML 42	EML 1"3/8 Z6	EM 65	EM 1"3/8 Z6	EP 65
90003	-	-	-	-	898	898	907
90004	907.5	908	911	911	919	919	928

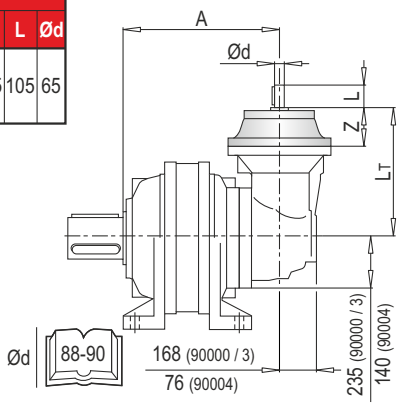

AKSESUARLAR / ACCESSORIES / ZUBEHÖR / ACCESSORI / ACCESSOIRES / ACCESORIOS

BS
Spline kaplin / Splined bushing / Innenverzahnte Buchse
Boccola scanalata / Moyeu cannelé / Casquillo ranurado

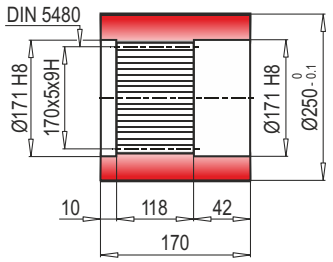

Malzeme / Material
Material / Materiale
Matière / Material
UNI C40
SAE 1040
DIN Ck40

Kod / Code
Bestell - Nr. / Codice
Code / Código
1271.115.076

FF
Sabitleme rondelası / Stop bottom plate / Endscheibe
Fondello di arresto / Bouchon de fermeture / Tapón de detención

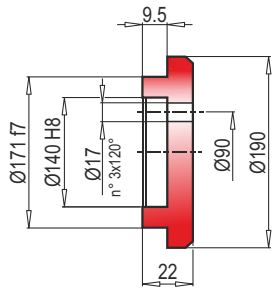

Kod / Code
Bestell - Nr. / Codice
Code / Código
1075.044.000

FL
Flanş / Flange / Flansch
Flangia / Bride / Brida

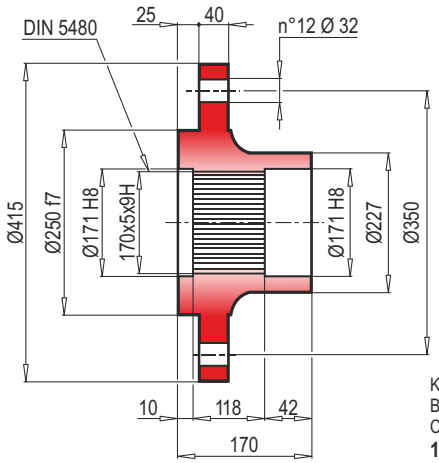

Kod / Code
Bestell - Nr. / Codice
Code / Código
1271.133.098

GA
Konik sıktırma / Shrink disc / Schrumpfscheibe
Giunto di attrito / Frette de serrage / Disco de contracción

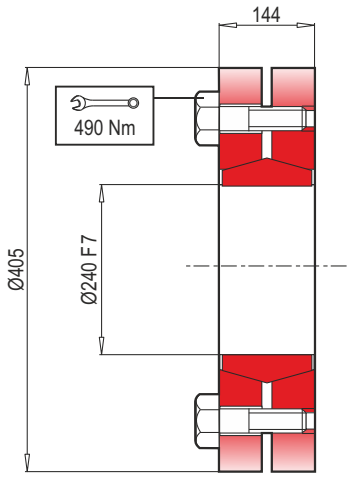

Maksimum moment
Max. torque
Max. Drehmoment
Coppia max.
Couple max.
Momento máx.
176 kNm

Kod / Code
Bestell - Nr. / Codice
Code / Código
5109.240.000

TR RADYAL YÜKLER (Fr)

Aşağıdaki grafikler istenilen n_2xh değerinin elde edilmesi için gerekli olan radyal yükleri ve K faktörlerini göstermektedir.

EN RADIAL LOADS (Fr)

The following curves show the radial loads and the K factors to obtain the required n2xh value.

DE RADIALLAST (Fr)

In den nachstehenden Diagrammen ist die Radiallast un der Koeffizient K dargestellt und kann mit dem gewünschten Wert n_2xh verglichen werden.

IT CARICHI RADIALI (Fr)

Nei diagrammi seguenti sono riportati i carichi radiali e i coefficienti K per rapportarli al valore n_2xh desiderato.

FR CHARGES RADIALES (Fr)

Dans les diagrammes suivants sont indiqués les charges radiales et les facteurs K de façon à obtenir la valeur n_2xh désirée.

ES CARGAS RADIALES (Fr)

En los siguientes diagramas se indican las cargas radiales y los coefici - entes K para obtener el valor requerido n_2xh.

M - CPC*

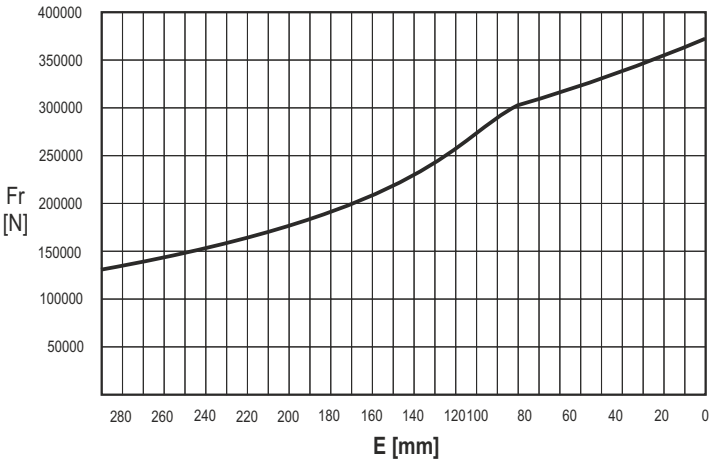

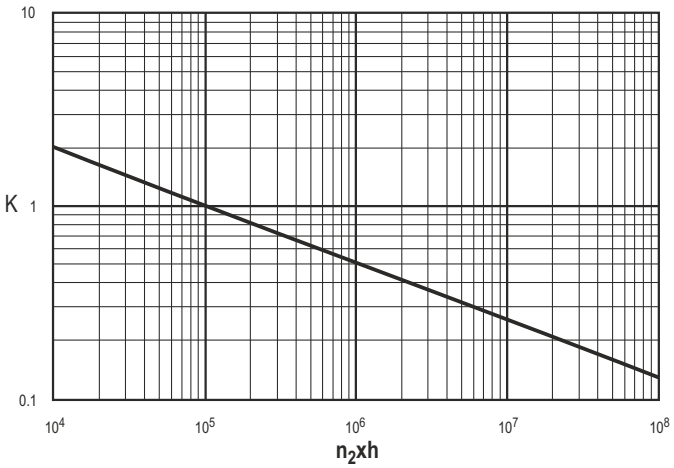

	n x h				
	10^5	10^4	10^6	10^7	10^8
M	Fr	Fr • K			
CPC*	Fr • 0.75	Fr • K • 0.75			

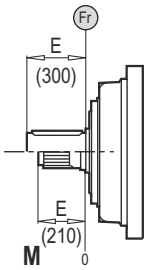

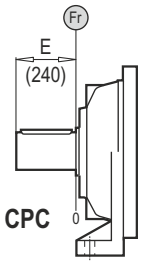

TR EKSENEL YÜKLER (Fa)

Tabloda yer alan eksenel yük değerleri, çıkış tipine ve uygulamanın yük yönüne göre değişir.

EN AXIAL LOADS (Fa)

The values of the axial loads in the table refer to the output versions and load direction of application.

DE AXIALLAST (Fa)

Die dargestellten Werte der Axiallast basieren auf der Version und der applizierten Lastrichtung.

IT CARICHI ASSIALI (Fa)

I valori dei carichi assiali indicati in tabella sono riferiti alle versioni e alla direzione di applicazione del carico.

FR CHARGES AXIALES (Fa)

Les valeurs des charges axiales indiquées dans le tableau se réfèrent aux versions et à la direction d'application de lacharge.

ES CARGAS AXIALES (Fa)

Los valores de las cargas axiales indicados en la tabla se refieren a las versiones y a la dirección de aplicación de la carga.

Fa [N]	M	CPC	
	40000	40000	←
	70000	70000	→

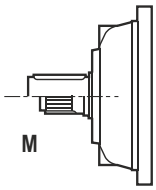

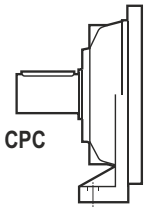

TEKNİK VERİLER / TECHNICAL DATA / TECHNISCHE DATEN / DATI TECNICI / DONNÉES TECHNIQUES / DATOS TÉCNICAS

	i_{ges}	Mmax (n_2 x h: 20000) (Nm)
130001	4.09 ... 6.23	283300
130002	16.36 ... 29.32	209500
130003	58.17 ... 197.89	209500
130004	219.75 ... 1190.30	209500
130005	781.33 ... 5665.81	209500

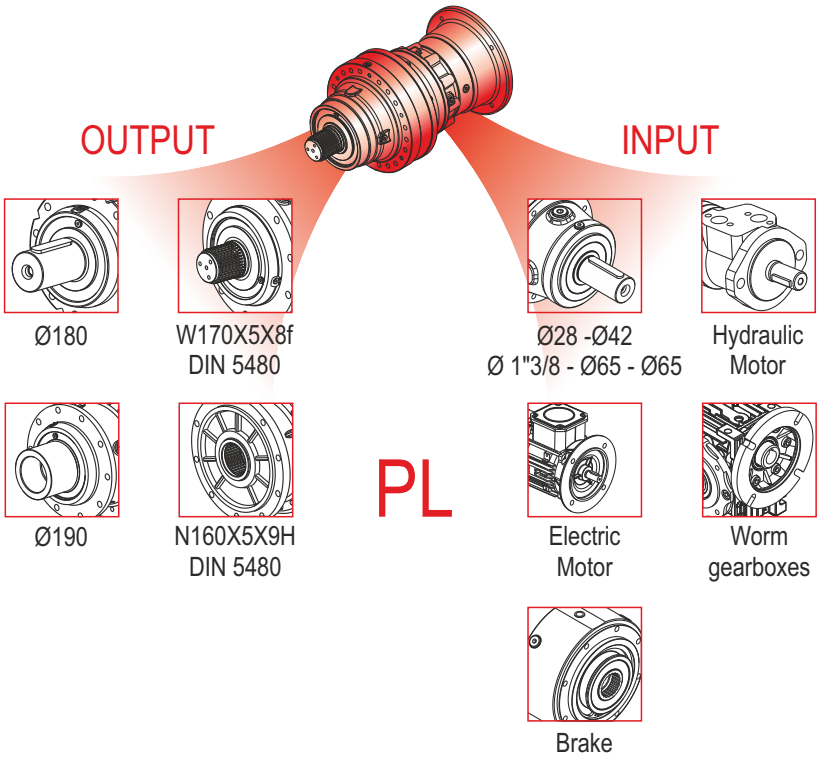

	i_{ges}	Mmax (n_2 x h: 20000) (Nm)
130003	50.25 ... 116.29	164600
130004	200.95 ... 771.75	164600
130005	893.10 ... 5566.69	209500

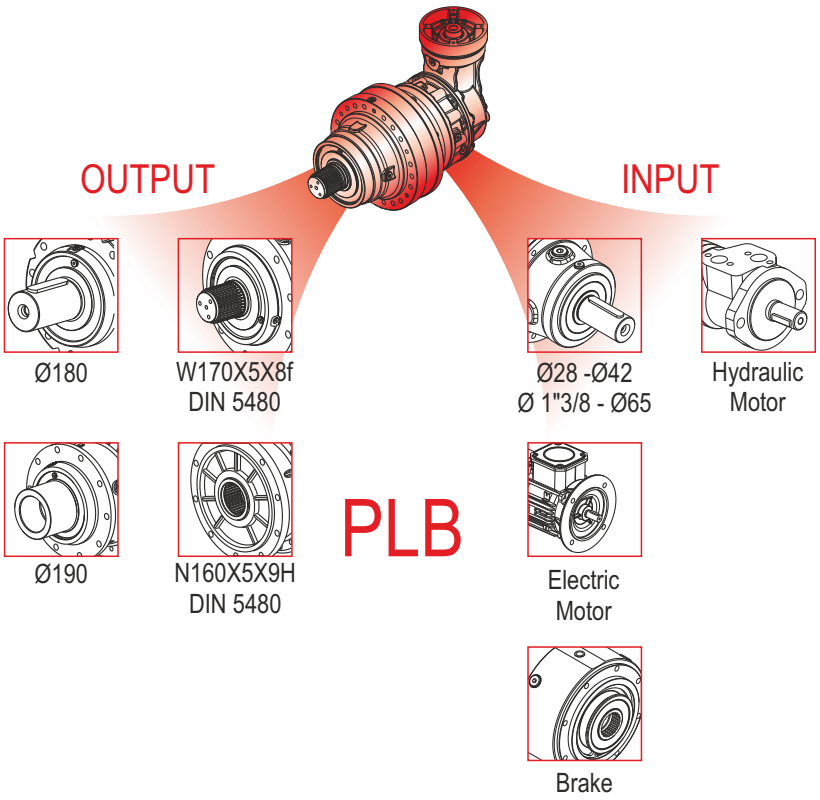

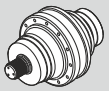	Pt [kW]	n_{1max} [min^{-1}]	i_{ges}	Mc [kNm]				Giriş- Input - Antrieb - Entrata - Entrée - Entrada		
				n_2 x h	n_2 x h	n_2 x h	n_2 x h			
				10.000	20.000	50.000	100.000	IEC (B5)	PMRV / PRV	EL - EML EM - EP - ET
PL 130001	102	750	4.09 5.25 6.23	185.1 136.9 107.5	166.7 123.2 96.8	145.1 107.3 84.4	132.0 100.6 80.6	160 | 225 180 | 250 200 | 280	-	-
PL 130002	60	1200	16.36 19.25 21.00 24.71 29.32	133.8 114.0 136.9 136.9 107.5	118.4 100.9 123.2 123.2 96.8	100.8 85.9 107.3 105.5 84.4	89.3 76.0 100.6 93.3 80.6	160 180 200 225 250	-	ET 90
PL 130003	45	2000	58.17 68.43 74.67 90.00 117.60 139.55 164.18 197.89	132.5 114.0 136.9 136.9 108.7 107.5 107.5 107.5	117.2 100.9 123.2 123.2 96.2 96.8 96.8 96.7	99.8 85.9 107.3 105.4 81.8 84.4 84.4 82.2	88.3 76.0 100.6 93.2 72.5 80.6 80.6 72.8	160 180 200 225	110 130 150	EM 65 EM 1"3/8 Z6 EP 65 ET 90
PL 130004	33	2800	219.75 239.95 258.53 282.07 308.00 340.00 385.78 448.00 485.10 540.00 607.60 652.50 705.60 816.31 1190.30	132.5 132.5 114.0 136.9 136.9 136.9 136.9 122.8 108.7 136.9 108.7 112.1 108.7 107.5 107.5	117.2 117.2 100.9 123.2 123.2 123.2 123.2 108.8 96.2 123.2 96.2 99.1 96.2 96.7 96.8	99.8 99.8 85.9 107.3 107.3 105.4 105.6 92.5 81.8 105.4 81.8 84.4 81.8 82.2 84,4	88.3 88.3 76.0 100.6 100.6 93.2 93.5 82.1 72.5 93.2 72.5 74.9 72.5 72.8 80.6	63 71 80 90 100 112 132 160 180	050 063 075 090 110 130 150	EL C 28 EL C 42 EML 42 EML 1"3/8 Z6 EM 65 EM 1"3/8 Z6 EP 65
PL 130005	27	2800	781.33 853.14 941.78 1002.93 1095.11 1208.89 1371.65 1579.61 1724.80 1904.00 2160.36 2604.00 3024.00 3402.56 4037.70 5665.81	132.5 132.5 132.5 136.9 136.9 136.9 136.9 129.2 136.9 136.9 136.9 136.9 136.9 108.7 107.5 107.5	117.2 117.2 117.2 123.2 123.2 123.2 123.2 114.1 122.7 123.2 123.2 123.2 123.2 96.2 96.8 96.8	99.8 99.8 99.8 107.3 107.3 107.3 105.6 97.1 104.4 105.4 105.6 105.4 105.4 81.8 84.4 84.4	88.3 88.3 88.3 100.6 100.6 100.6 93.5 85.8 92.3 93.2 93.5 93.2 93.2 72.5 80.6 80.6	63 71 80 90 100 112 132 160 180 200	050 063 075 090	EL C 28 EL C 42 EML 42 EML 1"3/8 Z6

	Pt [kW]	n_{1max} [min^{-1}]	i_{ges}	Mc [kNm]				Giriş- Input - Antrieb - Entrata - Entrée - Entrada	
				n_2 x h	n_2 x h	n_2 x h	n_2 x h		
				10.000	20.000	50.000	100.000	IEC (B5)	EL - EML EM - EP - ET
PLB 130003	45	2000	50.25 59.12 64.50 75.88 90.05 116.29	80.2 89.8 95.5 106.9 107.5 92.9	65.1 72.9 77.5 86.9 96.8 79.8	49.5 55.4 59.0 66.0 74.5 60.5	40.2 45.1 47.8 53.7 60.5 49.2	160 180 200 225	EM 65 EM 1"3/8 Z6 EP 65
PLB 130004	33	2800	200.95 284.96 368.95 434.05 482.09 567.16 683.63 771.75	69.8 89.1 106.8 107.5 107.5 107.5 107.5 75.7	56.7 72.4 86.7 96.8 96.8 96.8 96.7 70.6	43.0 55.0 65.9 73.8 79.5 84.4 82.2 62.5	35.0 44.7 53.6 60.0 64.6 72.3 72.8 55.3	160 180 200	EL C 28 EL C 42 EML 42 EML 1"3/8 Z6 EM 65 EM 1"3/8 Z6 EP 65
PLB 130005	25	2800	893.10 1064.00 1174.55 1282.50 1453.28 1676.89 1865.45 2021.25 2196.65 2439.11 2610.75 2940.00 3146.89 3405.19 3552.50 4114.61 4959.57 5566.69	114.0 136.9 136.9 136.9 113.8 136.9 136.9 136.9 107.5 122.8 107.5 136.9 107.5 107.5 112.1 107.5 107.5 107.5	100.9 123.2 123.2 123.2 100.8 123.2 123.2 123.2 96.8 108.8 96.8 123.2 96.8 96.8 99.1 96.8 96.8 96.7	85.9 107.3 105.4 105.4 85.8 107.3 105.4 105.4 84.4 92.5 84.4 105.4 84.4 84.4 84.4 84.4 84.4 82.2	76.0 100.6 93.2 93.2 75.9 97.3 93.2 93.2 80.6 82.1 80.6 93.2 80.6 80.6 74.9 80.6 80.6 72.8	80 90 100 112 132 160 180	EL C 28 EL C 42 EML 42 EML 1"3/8 Z6 EM 65 EM 1"3/8 Z6 EP 65

(n_2 x h = 20.000)

$$M_{max} = M_C \times 1.7$$

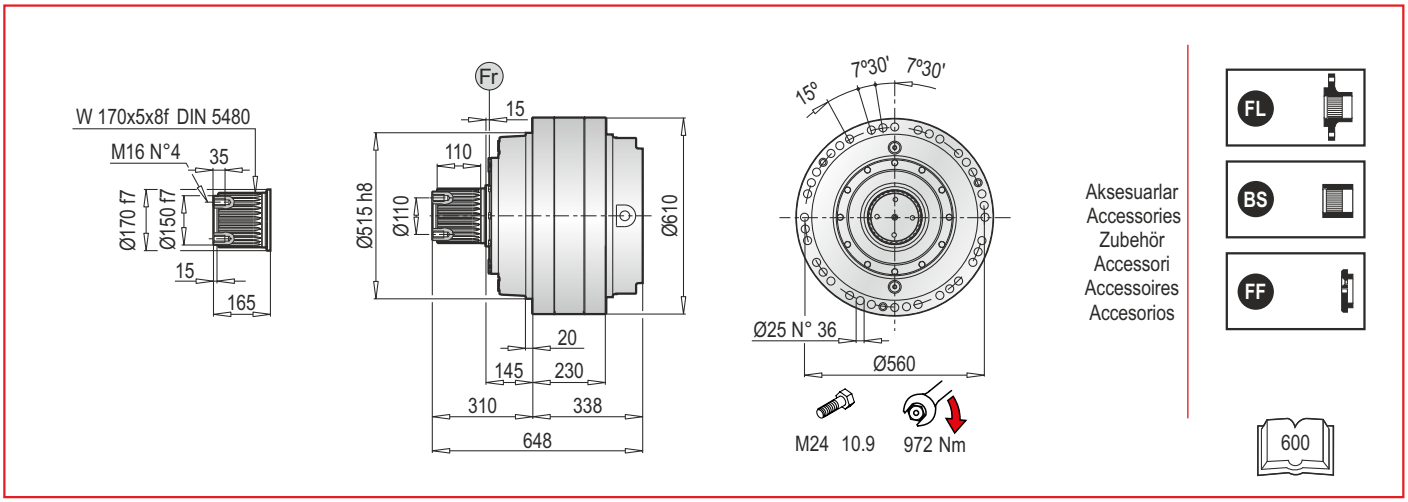

PL 130000 MS - Elektrik Motor Adaptörleri (IEC) / Electrıc Motor Couplings (IEC) / Anbauvorrichtung Für Elektromotore (IEC) / Predisposizioni Per Motori Elettrici (IEC) / Adaptations Pour Moteurs Electriques (IEC) / Acoplamientos Para Motores Eléctricos (IEC)

PL	IEC 63			IEC 71			IEC 80			IEC 90			IEC 100			IEC 112			IEC 132		
	LT	Z	ØD	LT	Z	ØD	LT	Z	ØD	LT	Z	ØD	LT	Z	ØD	LT	Z	ØD	LT	Z	ØD
130001	-			-			-			-			-			-			-		
130002	-			-			-			-			-			-			-		
130003	-			-			-			-			-			-			-		
130004	729.5	36	140	729.5	36	160	749.5	56	200	749.5	56	200	759.5	66	250	759.5	66	250	793.5	100	300
130005	790.5			790.5			810.5			810.5			820.5			820.5			854.5		

PL	IEC 160			IEC 180			IEC 200			IEC 225			IEC 250			IEC 280		
	LT	Z	ØD	LT	Z	ØD	LT	Z	ØD	LT	Z	ØD	LT	Z	ØD	LT	Z	ØD
130001	-	150	350	-	150	350	-	150	400	-	139	450	-	139	550	-	139	550
130002	685			685			685			674			674			-		
130003	740	118		740	118		770	148		759			-			-		
130004	832.5	139		832.5	139		-			-			-			-		
130005	893.5			893.5			-			-			-			-		

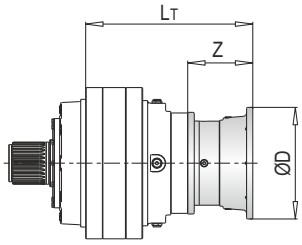

PL	IEC ~ Kg												
	63	71	80	90	100	112	132	160	180	200	225	250	280
130001	-	-	-	-	-	-	-	691	691	696	702	714	726
130002	-	-	-	-	-	-	-	834	834	839	845	857	-
130003	-	-	-	-	-	-	-	846	846	856	861	-	-
130004	843	843	845	845	846	846	850	860	860	-	-	-	-
130005	851	851	853	853	854	854	858	868	868	-	-	-	-

PL 130000 MS - Giriş Milleri / Input Shafts / Antriebswellen / Alberi Entrata / Arbres D'entree / Ejes De Entrada

PL	EL C 28				EL C 42				EML 42				EML 1"3/8 Z6				EM 65				EM 1"3/8 Z6			
	LT	Z	L	Ød	LT	Z	L	Ød	LT	Z	L	Ød	LT	Z	L	Ød	LT	Z	L	Ød	LT	Z	L	Ød
130002	-				-				-				-				-				-			
130003	-				-				-				-				743.5	121.5	105	65	743.5	121.5	106	1"3/8
130004	757.5	64	50	28	757.5	64	82	42	787.5	94	82	42	787.5	94	106	1"3/8	815				815			
130005	818.5				818.5				848.5				848.5				-				-			

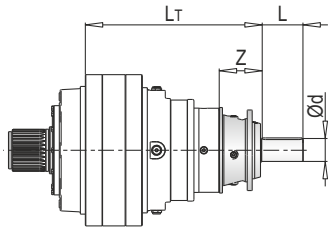

PL	EP 65				ET 90			
	LT	Z	L	Ød	LT	Z	L	Ød
130002	-				706.5	171.5	170	90
130003	775	153	105	65	793.5			
130004	846.5				-			
130005	-				-			

PL	~ Kg							
	EL C 28	EL C 42	EML 42	EML 1"3/8 Z6	EM 65	EM 1"3/8 Z6	EP 65	ET 90
130002	-	-	-	-	-	-	-	654
130003	-	-	-	-	841	841	850	872
130004	843.5	844	847	847	855	855	864	-
130005	851.5	852	855	855	-	-	-	-

PL 130000 MS - Sonsuz Dişlili Redüktör Adaptörleri (PMRV/PRV) / Worm Gearbox Adaptors (PMRV/PRV) / Anschluss Für Schneckengetriebe (PMRV/PRV) / Predisposizioni Per Riduttori A Vite Senza Fine (PMRV/PRV) / Adaptation Pour Reducteurs A Vis Sans Fin (PMRV/PRV) / Acoplamiento Para Reductores De Tornillo Sin Fin (PMRV/PRV)

PL	PMRV/PRV 050					PMRV/PRV 063					PMRV/PRV 075				
	LM	l	h	MA	G	LM	l	h	MA	G	LM	l	h	MA	G
130003	-					-					-				
130004	815	50	110	60	80	824.5	63	113	72	95	803.5	75	161	86	112.5
130005	876					885.5					864.5				

PL	PMRV/PRV 090					PMRV/PRV 110					PMRV/PRV 130				
	LM	l	h	MA	G	LM	l	h	MA	G	LM	l	h	MA	G
130003	-					756	110	237.5	127.5	160	761.5	130	277.5	147.5	180
130004	813.5	90	193	103	129.5	827.5					833				
130005	874.5					-					-				

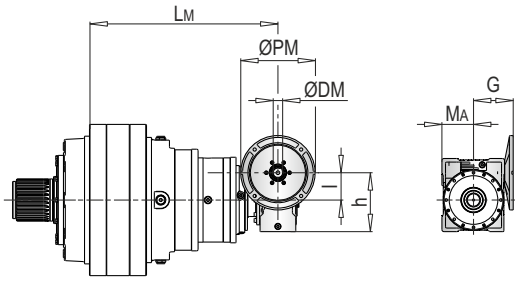

PL	PMRV/PRV 150				
	LM	l	h	MA	G
130003	778	150	320	170	210
130004	849.5				
130005	-				

PL	PMRV/PRV ~ Kg						
	050	063	075	090	110	130	150
130003	-	-	-	-	870	887	923
130004	846	849.5	852	857	884	901	937
130005	854	857.5	860	865	-	-	-

ØPM
ØDM
105

PLB 130000 MS - Elektrik Motor Adaptörleri (IEC) / Electric Motor Couplings (IEC) / Anbauvorrichtung Für Elektromotore (IEC) / Predisposizioni Per Motori Elettrici (IEC) / Adaptations Pour Moteurs Electriques (IEC) / Acoplamientos Para Motores Eléctricos (IEC)

PLB	IEC 80				IEC 90				IEC 100				IEC 112				IEC 132			
	A	LT	Z	ØD	A	LT	Z	ØD	A	LT	Z	ØD	A	LT	Z	ØD	A	LT	Z	ØD
130003	-				-				-				-				-			
130004	-				-				-				-				-			
130005	795	240	56	200	795	240	56	200	795	240	66	250	795	240	66	250	795	240	100	300

PLB	IEC 160				IEC 180				IEC 200				IEC 225			
	A	LT	Z	ØD	A	LT	Z	ØD	A	LT	Z	ØD	A	LT	Z	ØD
130003	600	315	118	350	600	315	118	350	600	315	148	400	600	315	839	450
130004	757	315			757				-				-			
130005	795	240	139		795	240	139		-				-			

PLB	IEC ~ Kg								
	80	90	100	112	132	160	180	200	225
130003	-	-	-	-	-	915	915	925	926
130004	-	-	-	-	-	841	841	-	-
130005	887	887	888	888	892	902	902	-	-

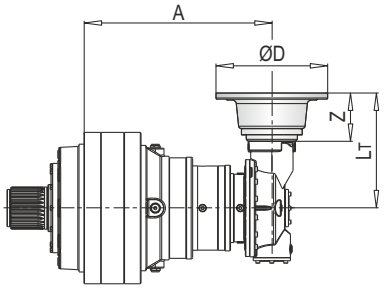

103

PLB 130000 MS - Giriş Milleri / Input Shafts / Antriebswellen / Alberi Entrata / Arbres D'entree / Ejes De Entrada

PLB	EL C 28					EL C 42					EML 42					EML 1"3/8 Z6					EM 65				
	A	LT	Z	L	Ød	A	LT	Z	L	Ød	A	LT	Z	L	Ød	A	LT	Z	L	Ød	A	LT	Z	L	Ød
130003	-					-					-					-					600	436.5	121.5	105	65
130004	757	379	64	50	28	757	379	64	82	42	757	409	94	82	42	757	409	94	106	1"3/8	757				
130005	795	304				795	304				795	334				795	334				795	361.5			

PLB	EM 1"3/8 Z6					EP 65				
	A	LT	Z	L	Ød	A	LT	Z	L	Ød
130003	600	436.5	121.5	105	1"3/8	600	468	153	105	65
130004	757					757				
130005	795	361.5				795	393			

PLB	~ Kg						
	EL C 28	EL C 42	EML 42	EML 1"3/8 Z6	EM 65	EM 1"3/8 Z6	EP 65
130003	-	-	-	-	887	887	896
130004	901.5	902	905	905	913	913	922
130005	885.5	886	889	889	898	898	907

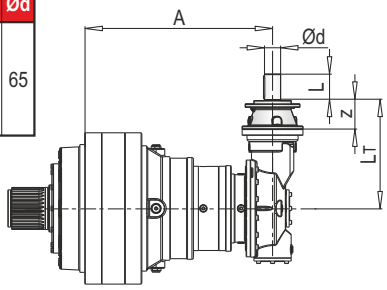

Ød
88-90

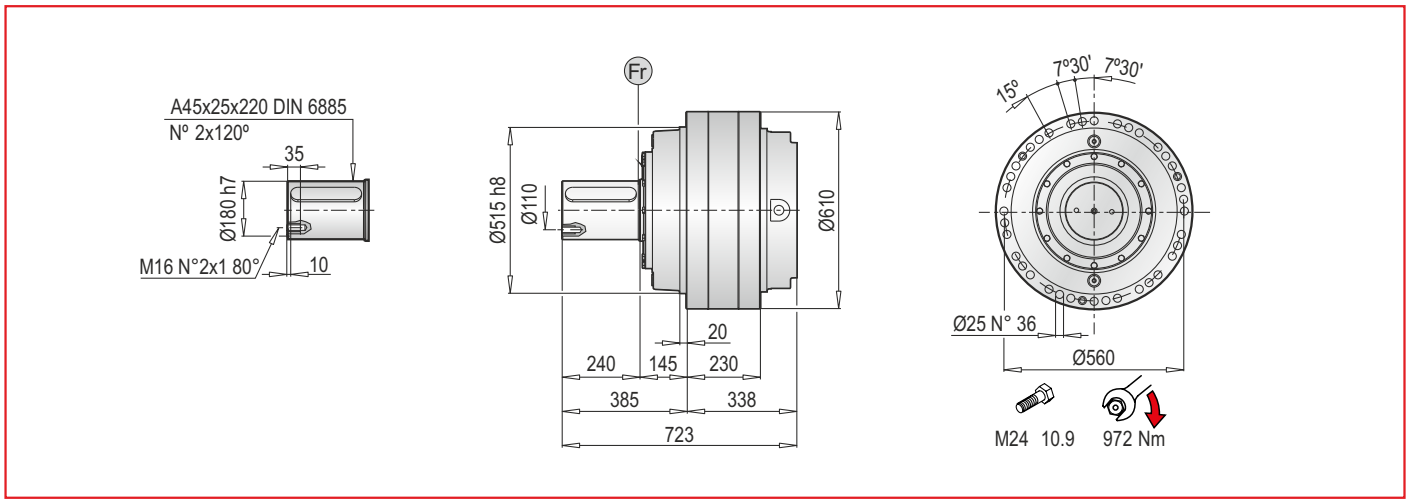

PL 130000 MC - Elektrik Motor Adaptörleri (IEC) / Electrıc Motor Couplings (IEC) / Anbauvorrichtung Für Elektromotore (IEC) / Predisposizioni Per Motori Elettrici (IEC) / Adaptations Pour Moteurs Electriques (IEC) / Acoplamientos Para Motores Eléctricos (IEC)

PL	IEC 63			IEC 71			IEC 80			IEC 90			IEC 100			IEC 112			IEC 132		
	LT	Z	ØD	LT	Z	ØD	LT	Z	ØD	LT	Z	ØD	LT	Z	ØD	LT	Z	ØD	LT	Z	ØD
130001	-			-			-			-			-			-			-		
130002	-			-			-			-			-			-			-		
130003	-			-			-			-			-			-			-		
130004	729.5	36	140	729.5	36	160	749.5	56	200	749.5	56	200	759.5	66	250	759.5	66	250	793.5	100	300
130005	790.5			790.5			810.5			810.5			820.5			820.5			854.5		

PL	IEC 160			IEC 180			IEC 200			IEC 225			IEC 250			IEC 280		
	LT	Z	ØD	LT	Z	ØD	LT	Z	ØD	LT	Z	ØD	LT	Z	ØD	LT	Z	ØD
130001	-	150	350	-	150	350	-	150	400	-	139	450	-	139	550	-	139	550
130002	685			685			685			674			674			-		
130003	740	118		740	118		770	148		759			-			-		
130004	832.5	139		832.5	139		-			-			-			-		
130005	893.5			893.5			-			-			-			-		

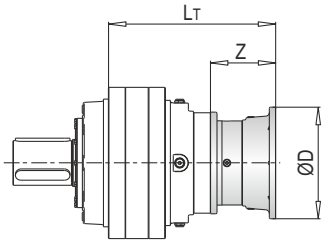

PL	IEC ~ Kg												
	63	71	80	90	100	112	132	160	180	200	225	250	280
130001	-	-	-	-	-	-	-	691	691	696	702	714	726
130002	-	-	-	-	-	-	-	834	834	839	845	857	-
130003	-	-	-	-	-	-	-	846	846	856	861	-	-
130004	843	843	845	845	846	846	850	860	860	-	-	-	-
130005	851	851	853	853	854	854	858	868	868	-	-	-	-

PL 130000 MC - Giriş Milleri / Input Shafts / Antriebswellen / Alberi Entrata / Arbres D'entree / Ejes De Entrada

PL	EL C 28				EL C 42				EML 42				EML 1"3/8 Z6				EM 65				EM 1"3/8 Z6			
	LT	Z	L	Ød	LT	Z	L	Ød	LT	Z	L	Ød	LT	Z	L	Ød	LT	Z	L	Ød	LT	Z	L	Ød
130002	-				-				-				-				-				-			
130003	-				-				-				-				743.5	121.5	105	65	743.5	121.5	106	1"3/8
130004	757.5	64	50	28	757.5	64	82	42	787.5	94	82	42	787.5	94	106	1"3/8	815				815			
130005	818.5				818.5				848.5				848.5				-				-			

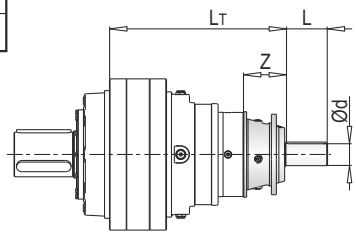

PL	EP 65				ET 90			
	LT	Z	L	Ød	LT	Z	L	Ød
130002	-				706.5	171.5	170	90
130003	775	153	105	65	793.5			
130004	846.5				-			
130005	-				-			

PL	~ Kg							
	EL C 28	EL C 42	EML 42	EML 1"3/8 Z6	EM 65	EM 1"3/8 Z6	EP 65	ET 90
130002	-	-	-	-	-	-	-	654
130003	-	-	-	-	841	841	850	872
130004	843.5	844	847	847	855	855	864	-
130005	851.5	852	855	855	-	-	-	-

PL 130000 MC - Sonsuz Dişlili Redüktör Adaptörleri (PMRV/PRV) / Worm Gearbox Adaptors (PMRV/PRV) / Anschluss Für Schneckengetriebe (PMRV/PRV) / Predisposizioni Per Riduttori A Vite Senza Fine (PMRV/PRV) / Adaptation Pour Reducteurs A Vis Sans Fin (PMRV/PRV) / Acoplamiento Para Reductores De Tornillo Sin Fin (PMRV/PRV)

PL	PMRV/PRV 050					PMRV/PRV 063					PMRV/PRV 075				
	LM	l	h	MA	G	LM	l	h	MA	G	LM	l	h	MA	G
130003	-					-					-				
130004	815	50	110	60	80	824.5	63	113	72	95	803.5	75	161	86	112.5
130005	876					885.5					864.5				

PL	PMRV/PRV 090					PMRV/PRV 110					PMRV/PRV 130				
	LM	l	h	MA	G	LM	l	h	MA	G	LM	l	h	MA	G
130003	-					756	110	237.5	127.5	160	761.5	130	277.5	147.5	180
130004	813.5	90	193	103	129.5	827.5					833				
130005	874.5					-					-				

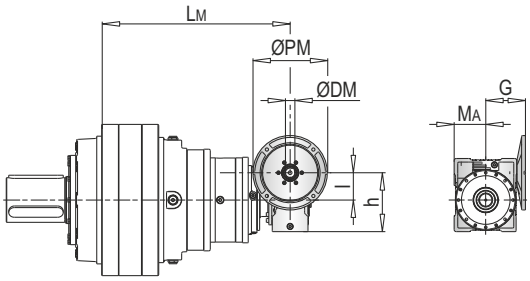

PL	PMRV/PRV 150				
	LM	l	h	MA	G
130003	778	150	320	170	210
130004	849.5				
130005	-				

PL	PMRV/PRV ~ Kg						
	050	063	075	090	110	130	150
130003	-	-	-	-	870	887	923
130004	846	849.5	852	857	884	901	937
130005	854	857.5	860	865	-	-	-

ØPM
ØDM
105

PLB 130000 MC - Elektrik Motor Adaptörleri (IEC) / Electric Motor Couplings (IEC) / Anbauvorrichtung Für Elektromotore (IEC) / Predisposizioni Per Motori Elettrici (IEC) / Adaptations Pour Moteurs Electriques (IEC) / Acoplamientos Para Motores Eléctricos (IEC)

PLB	IEC 80				IEC 90				IEC 100				IEC 112				IEC 132			
	A	LT	Z	ØD	A	LT	Z	ØD	A	LT	Z	ØD	A	LT	Z	ØD	A	LT	Z	ØD
130003	-				-				-				-				-			
130004	-				-				-				-				-			
130005	795	240	56	200	795	240	56	200	795	240	66	250	795	240	66	250	795	240	100	300

PLB	IEC 160				IEC 180				IEC 200				IEC 225			
	A	LT	Z	ØD	A	LT	Z	ØD	A	LT	Z	ØD	A	LT	Z	ØD
130003	600	315	118	350	600	315	118	350	600	315	148	400	600	315	839	450
130004	757				757				-				-			
130005	795	240	139		795	240	139		-				-			

PLB	IEC ~ Kg								
	80	90	100	112	132	160	180	200	225
130003	-	-	-	-	-	915	915	925	926
130004	-	-	-	-	-	841	841	-	-
130005	887	887	888	888	892	902	902	-	-

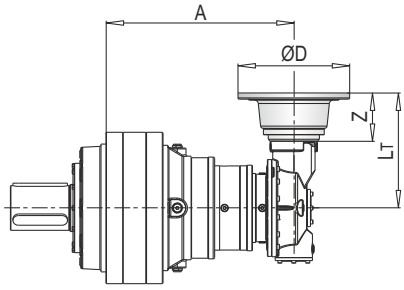

103

PLB 130000 MC - Giriş Milleri / Input Shafts / Antriebswellen / Alberi Entrata / Arbres D'entree / Ejes De Entrada

PLB	EL C 28					EL C 42					EML 42					EML 1"3/8 Z6					EM 65				
	A	LT	Z	L	Ød	A	LT	Z	L	Ød	A	LT	Z	L	Ød	A	LT	Z	L	Ød	A	LT	Z	L	Ød
130003	-					-					-					-					600	436.5	121.5	105	65
130004	757	379	64	50	28	757	379	64	82	42	757	409	94	82	42	757	409	94	106	1"3/8	757				
130005	795	304				795	304				795	334				795	334				795	361.5			

PLB	EM 1"3/8 Z6					EP 65				
	A	LT	Z	L	Ød	A	LT	Z	L	Ød
130003	600	436.5	121.5	105	1"3/8	600	468	153	105	65
130004	757					757				
130005	795	361.5				795	393			

PLB	~ Kg						
	EL C 28	EL C 42	EML 42	EML 1"3/8 Z6	EM 65	EM 1"3/8 Z6	EP 65
130003	-	-	-	-	887	887	896
130004	901.5	902	905	905	913	913	922
130005	885.5	886	889	889	898	898	907

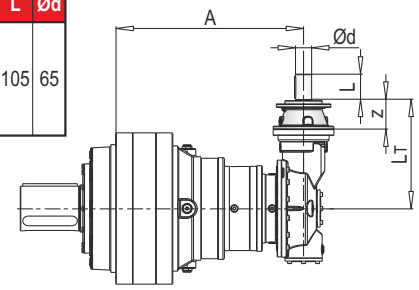

Ød
88-90

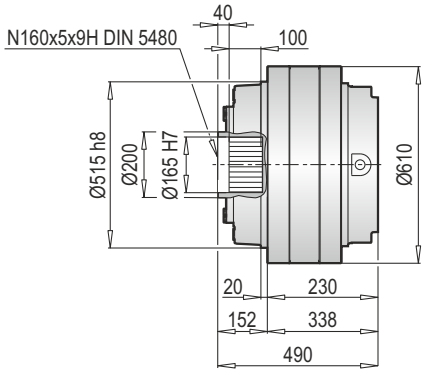

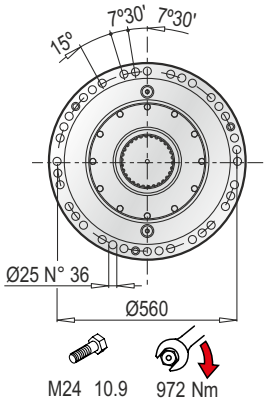

PL 130000 F - Elektrik Motor Adaptörleri (IEC) / Electric Motor Couplings (IEC) /Anbauvorrichtung Für Elektromotore (IEC) / Predisposizioni Per Motori Elettrici (IEC) / Adaptations Pour Moteurs Electriques (IEC) /Acoplamientos Para Motores Eléctricos (IEC)

PL	IEC 63			IEC 71			IEC 80			IEC 90			IEC 100			IEC 112			IEC 132		
	LT	Z	ØD	LT	Z	ØD	LT	Z	ØD	LT	Z	ØD	LT	Z	ØD	LT	Z	ØD	LT	Z	ØD
130001	-			-			-			-			-			-			-		
130002	-			-			-			-			-			-			-		
130003	-			-			-			-			-			-			-		
130004	729.5	36	140	729.5	36	160	749.5	56	200	749.5	56	200	759.5	66	250	759.5	66	250	793.5	100	300
130005	790.5			790.5			810.5			810.5			820.5			820.5			854.5		

PL	IEC 160			IEC 180			IEC 200			IEC 225			IEC 250			IEC 280		
	LT	Z	ØD	LT	Z	ØD	LT	Z	ØD	LT	Z	ØD	LT	Z	ØD	LT	Z	ØD
130001	-	150	350	-	150	350	-	150	400	-	139	450	-	139	550	-	139	550
130002	685			685			685			674			674			-		
130003	740	118		740	118		770	148		759			-			-		
130004	832.5	139		832.5	139		-			-			-			-		
130005	893.5			893.5			-			-			-			-		

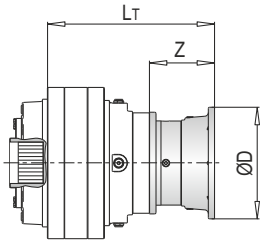

PL	IEC ~ Kg												
	63	71	80	90	100	112	132	160	180	200	225	250	280
130001	-	-	-	-	-	-	-	573	573	578	584	596	608
130002	-	-	-	-	-	-	-	716	716	721	727	739	-
130003	-	-	-	-	-	-	-	726	726	736	741	-	-
130004	723	723	725	725	726	726	730	740	740	-	-	-	-
130005	731	731	733	731	732	732	736	748	748	-	-	-	-

PL 130000 F - Giriş Milleri / Input Shafts / Antriebswellen / Alberi Entrata / Arbres D'entree / Ejes De Entrada

PL	EL C 28				EL C 42				EML 42				EML 1"3/8 Z6				EM 65				EM 1"3/8 Z6			
	LT	Z	L	Ød	LT	Z	L	Ød	LT	Z	L	Ød	LT	Z	L	Ød	LT	Z	L	Ød	LT	Z	L	Ød
130002	-				-				-				-				-				-			
130003	-				-				-				-				743.5	121.5	105	65	743.5	121.5	106	1"3/8
130004	757.5	64	50	28	757.5	64	82	42	787.5	94	82	42	787.5	94	106	1"3/8	815				815			
130005	818.5				818.5				848.5				848.5				-				-			

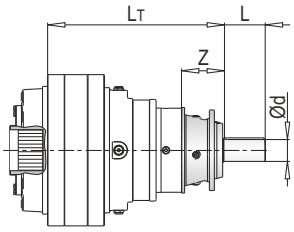

PL	EP 65				ET 90			
	LT	Z	L	Ød	LT	Z	L	Ød
130002	-				706.5	171.5	170	90
130003	775	153	105	65	793.5			
130004	846.5				-			
130005	-				-			

PL	~ Kg							
	EL C 28	EL C 42	EML 42	EML 1"3/8 Z6	EM 65	EM 1"3/8 Z6	EP 65	ET 90
130002	-	-	-	-	-	-	-	576
130003	-	-	-	-	721	721	730	752
130004	723.5	724	727	727	735	735	744	-
130005	731.5	732	735	735	-	-	-	-

PL 130000 F - Sonsuz Dişlili Redüktör Adaptörleri (PMRV/PRV) / Worm Gearbox Adaptors (PMRV/PRV) / Anschluss Für Schneckengetriebe (PMRV/PRV) / Predisposizioni Per Riduttori A Vite Senza Fine (PMRV/PRV) / Adaptation Pour Reducteurs A Vis Sans Fin (PMRV/PRV) / Acoplamiento Para Reductores De Tornillo Sin Fin (PMRV/PRV)

PL	PMRV/PRV 050					PMRV/PRV 063					PMRV/PRV 075				
	LM	l	h	MA	G	LM	l	h	MA	G	LM	l	h	MA	G
130003	-					-					-				
130004	815	50	110	60	80	824.5	63	113	72	95	803.5	75	161	86	112.5
130005	876					885.5					864.5				

PL	PMRV/PRV 090					PMRV/PRV 110					PMRV/PRV 130				
	LM	l	h	MA	G	LM	l	h	MA	G	LM	l	h	MA	G
130003	-					756	110	237.5	127.5	160	761.5	130	277.5	147.5	180
130004	813.5	90	193	103	129.5	827.5					833				
130005	874.5					-					-				

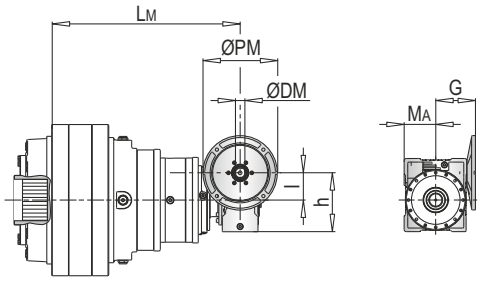

PL	PMRV/PRV 150				
	LM	l	h	MA	G
130003	778	150	320	170	210
130004	849.5				
130005	-				

PL	PMRV/PRV ~ Kg						
	050	063	075	090	110	130	150
130003	-	-	-	-	750	767	803
130004	726	729.5	732	737	764	781	817
130005	734	737.5	740	745	-	-	-

ØPM
ØDM
105

PLB 130000 F - Elektrik Motor Adaptörleri (IEC) / Electric Motor Couplings (IEC) / Anbauvorrichtung Für Elektromotore (IEC) / Predisposizioni Per Motori Elettrici (IEC) / Adaptations Pour Moteurs Electriques (IEC) / Acoplamientos Para Motores Eléctricos (IEC)

PLB	IEC 80				IEC 90				IEC 100				IEC 112				IEC 132			
	A	LT	Z	ØD	A	LT	Z	ØD	A	LT	Z	ØD	A	LT	Z	ØD	A	LT	Z	ØD
130003	-				-				-				-				-			
130004	-				-				-				-				-			
130005	795	240	56	200	795	240	56	200	795	240	66	250	795	240	66	250	795	240	100	300

PLB	IEC 160				IEC 180				IEC 200				IEC 225			
	A	LT	Z	ØD	A	LT	Z	ØD	A	LT	Z	ØD	A	LT	Z	ØD
130003	600	315	118	350	600	315	118	350	600	315	148	400	600	315	839	450
130004	757				757				-				-			
130005	795	240	139		795	240	139		-				-			

PLB	IEC ~ Kg								
	80	90	100	112	132	160	180	200	225
130003	-	-	-	-	-	768	768	778	783
130004	-	-	-	-	-	794	794	-	-
130005	767	767	768	768	772	782	782	-	-

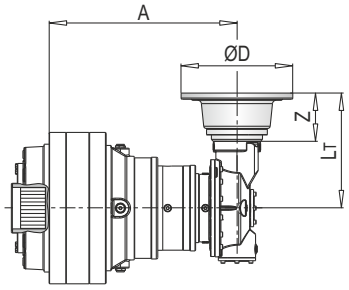

103

PLB 130000 F - Giriş Milleri / Input Shafts / Antriebswellen / Alberi Entrata / Arbres D'entree / Ejes De Entrada

PLB	EL C 28					EL C 42					EML 42					EML 1"3/8 Z6					EM 65				
	A	LT	Z	L	Ød	A	LT	Z	L	Ød	A	LT	Z	L	Ød	A	LT	Z	L	Ød	A	LT	Z	L	Ød
130003	-					-					-					-					600	436.5	121.5	105	65
130004	757	379	64	50	28	757	379	64	82	42	757	409	94	82	42	757	409	94	106	1"3/8	757				
130005	795	304				795	304				795	334				795	334				795	361.5			

PLB	EM 1"3/8 Z6					EP 65				
	A	LT	Z	L	Ød	A	LT	Z	L	Ød
130003	600	436.5	121.5	105	1"3/8	600	468	153	105	65
130004	757					757				
130005	795	361.5				795	393			

PLB	~ Kg						
	EL C 28	EL C 42	EML 42	EML 1"3/8 Z6	EM 65	EM 1"3/8 Z6	EP 65
130003	-	-	-	-	721	721	730
130004	723.5	724	727	727	735	735	744
130005	731.5	732	735	735	743	743	752

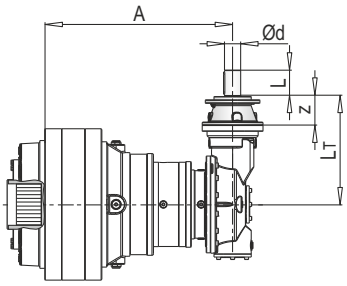

Ød
88-90

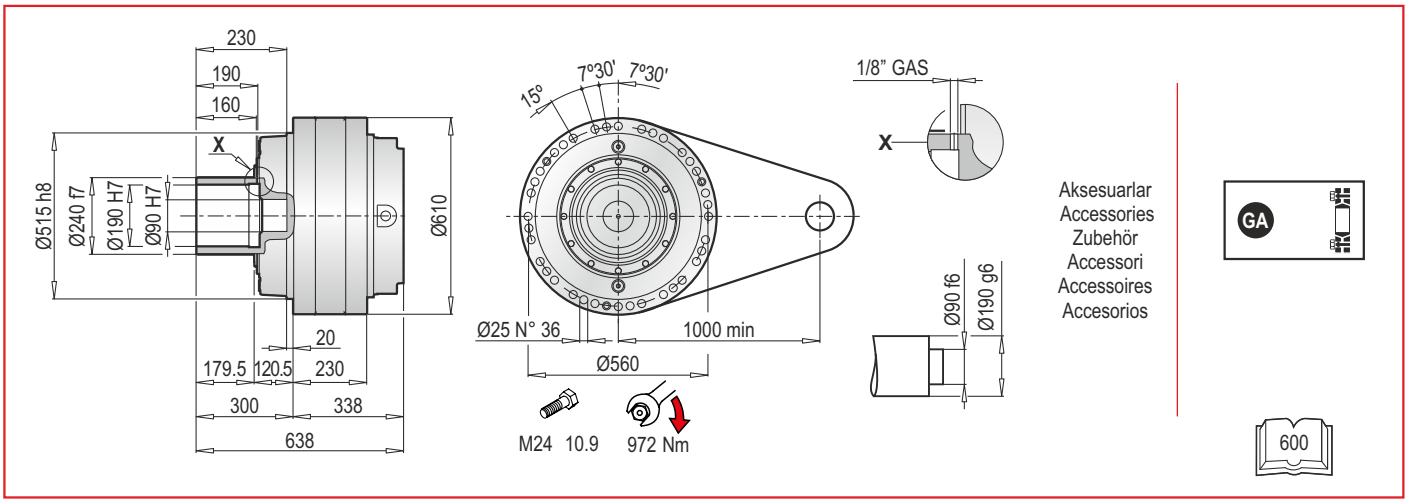

PL 130000 FS - Elektrik Motor Adaptörleri (IEC) / Electrıc Motor Couplings (IEC) / Anbauvorrichtung Für Elektromotore (IEC) / Predisposizioni Per Motori Elettrici (IEC) / Adaptations Pour Moteurs Electriques (IEC) / Acoplamientos Para Motores Eléctricos (IEC)

PL	IEC 63			IEC 71			IEC 80			IEC 90			IEC 100			IEC 112			IEC 132		
	LT	Z	ØD	LT	Z	ØD	LT	Z	ØD	LT	Z	ØD	LT	Z	ØD	LT	Z	ØD	LT	Z	ØD
130001	-			-			-			-			-			-			-		
130002	-			-			-			-			-			-			-		
130003	-			-			-			-			-			-			-		
130004	729.5	36	140	729.5	36	160	749.5	56	200	749.5	56	200	759.5	66	250	759.5	66	250	793.5	100	300
130005	790.5			790.5			810.5			810.5			820.5			820.5			854.5		

PL	IEC 160			IEC 180			IEC 200			IEC 225			IEC 250			IEC 280		
	LT	Z	ØD	LT	Z	ØD	LT	Z	ØD	LT	Z	ØD	LT	Z	ØD	LT	Z	ØD
130001	-	150		-	150		-	150		-			-	139	550	-	139	550
130002	685			685			685		400	674	139	450	674			-		
130003	740	118	350	740	118	350	770	148		759			-			-		
130004	832.5	139		832.5	139		-			-			-			-		
130005	893.5			893.5			-			-			-			-		

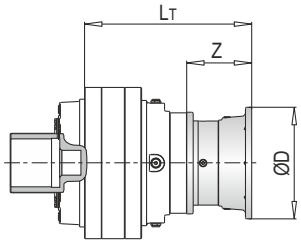

PL	IEC ~ Kg												
	63	71	80	90	100	112	132	160	180	200	225	250	280
130001	-	-	-	-	-	-	-	600	600	605	611	623	635
130002	-	-	-	-	-	-	-	743	743	748	754	766	-
130003	-	-	-	-	-	-	-	753	753	763	768	-	-
130004	750	750	752	752	753	753	757	767	767	-	-	-	-
130005	758	758	760	760	761	761	765	775	775	-	-	-	-

PL 130000 FS - Giriş Milleri / Input Shafts / Antriebswellen / Alberi Entrata / Arbres D'entree / Ejes De Entrada

PL	EL C 28				EL C 42				EML 42				EML 1"3/8 Z6				EM 65				EM 1"3/8 Z6			
	LT	Z	L	Ød	LT	Z	L	Ød	LT	Z	L	Ød	LT	Z	L	Ød	LT	Z	L	Ød	LT	Z	L	Ød
130002	-				-				-				-				-				-			
130003	-				-				-				-				743.5	121.5	105	65	743.5	121.5	106	1"3/8
130004	757.5	64	50	28	757.5	64	82	42	787.5	94	82	42	787.5	94	106	1"3/8	815				815			
130005	818.5				818.5				848.5				848.5				-				-			

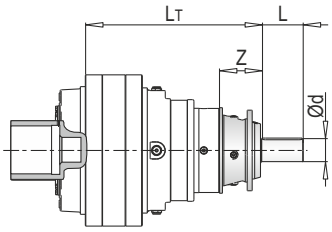

PL	EP 65				ET 90			
	LT	Z	L	Ød	LT	Z	L	Ød
130002	-				706.5	171.5	170	90
130003	775	153	105	65	793.5			
130004	846.5				-			
130005	-				-			

PL	~ Kg							
	EL C 28	EL C 42	EML 42	EML 1"3/8 Z6	EM 65	EM 1"3/8 Z6	EP 65	ET 90
130002	-	-	-	-	-	-	-	603
130003	-	-	-	-	748	748	757	769
130004	750.5	751	754	754	762	762	771	-
130005	758.5	759	762	762	-	-	-	-

PL 130000 FS - Sonsuz Dişlili Redüktör Adaptörleri (PMRV/PRV) / Worm Gearbox Adaptors (PMRV/PRV) / Anschluss Für Schneckengetriebe (PMRV/PRV) / Predisposizioni Per Riduttori A Vite Senza Fine (PMRV/PRV) / Adaptation Pour Reducteurs A Vis Sans Fin (PMRV/PRV) / Acoplamiento Para Reductores De Tornillo Sin Fin (PMRV/PRV)

PL	PMRV/PRV 050					PMRV/PRV 063					PMRV/PRV 075				
	LM	l	h	MA	G	LM	l	h	MA	G	LM	l	h	MA	G
130003	-					-					-				
130004	815	50	110	60	80	824.5	63	113	72	95	803.5	75	161	86	112.5
130005	876					885.5					864.5				

PL	PMRV/PRV 090					PMRV/PRV 110					PMRV/PRV 130				
	LM	l	h	MA	G	LM	l	h	MA	G	LM	l	h	MA	G
130003	-					756	110	237.5	127.5	160	761.5	130	277.5	147.5	180
130004	813.5	90	193	103	129.5	827.5					833				
130005	874.5					-					-				

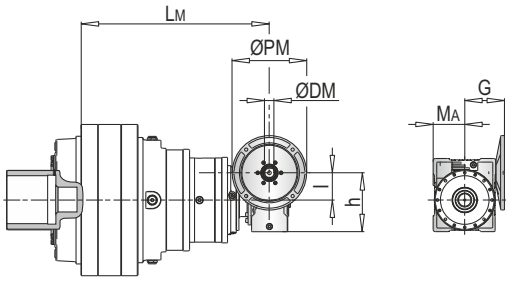

PL	PMRV/PRV 150				
	LM	l	h	MA	G
130003	778	150	320	170	210
130004	849.5				
130005	-				

PL	PMRV/PRV ~ Kg						
	050	063	075	090	110	130	150
130003	-	-	-	-	777	794	830
130004	753	756.5	759	764	791	808	844
130005	761	764.5	767	771	-	-	-

ØPM
ØDM
105

PLB 130000 FS - Elektrik Motor Adaptörleri (IEC) / Electric Motor Couplings (IEC) / Anbauvorrichtung Für Elektromotore (IEC) / Predisposizioni Per Motori Elettrici (IEC) / Adaptations Pour Moteurs Electriques (IEC) / Acoplamientos Para Motores Eléctricos (IEC)

PLB	IEC 80				IEC 90				IEC 100				IEC 112				IEC 132			
	A	LT	Z	ØD	A	LT	Z	ØD	A	LT	Z	ØD	A	LT	Z	ØD	A	LT	Z	ØD
130003	-				-				-				-				-			
130004	-				-				-				-				-			
130005	795	240	56	200	795	240	56	200	795	240	66	250	795	240	66	250	795	240	100	300

PLB	IEC 160				IEC 180				IEC 200				IEC 225			
	A	LT	Z	ØD	A	LT	Z	ØD	A	LT	Z	ØD	A	LT	Z	ØD
130003	600	315	118	350	600	315	118	350	600	315	148	400	600	315	839	450
130004	757				757				-				-			
130005	795	240	139		795	240	139		-				-			

PLB	IEC ~ Kg								
	80	90	100	112	132	160	180	200	225
130003	-	-	-	-	-	795	795	805	810
130004	-	-	-	-	-	821	821	-	-
130005	794	794	795	795	799	809	809	-	-

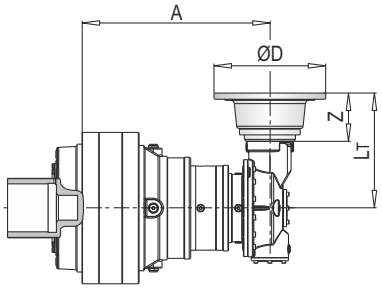

103

PLB 130000 FS - Giriş Milleri / Input Shafts / Antriebswellen / Alberi Entrata / Arbres D'entree / Ejes De Entrada

PLB	EL C 28					EL C 42					EML 42					EML 1"3/8 Z6					EM 65				
	A	LT	Z	L	Ød	A	LT	Z	L	Ød	A	LT	Z	L	Ød	A	LT	Z	L	Ød	A	LT	Z	L	Ød
130003	-					-					-					-					600	436.5	121.5	105	65
130004	757	379	64	50	28	757	379	64	82	42	757	409	94	82	42	757	409	94	106	1"3/8	757				
130005	795	304				795	304				795	334				795	334				795	361.5			

PLB	EM 1"3/8 Z6					EP 65				
	A	LT	Z	L	Ød	A	LT	Z	L	Ød
130003	600	436.5	121.5	105	1"3/8	600	468	153	105	65
130004	757					757				
130005	795	361.5				795	393			

PLB	~ Kg						
	EL C 28	EL C 42	EML 42	EML 1"3/8 Z6	EM 65	EM 1"3/8 Z6	EP 65
130003	-	-	-	-	748	748	757
130004	750.5	751	754	754	762	762	771
130005	758.5	759	762	762	770	770	779

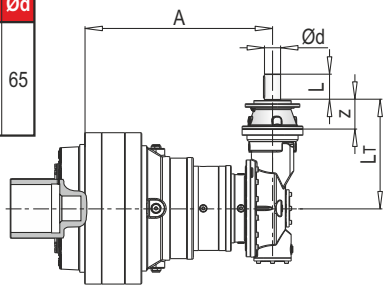

Ød
88-90

AKSESUARLAR / ACCESSORIES / ZUBEHÖR / ACCESSORI / ACCESSOIRES / ACCESORIOS

BS
Spline kaplin / Splined bushing / Innenverzahnte Buchse
Boccola scanalata / Moyeu cannelé / Casquillo ranurado

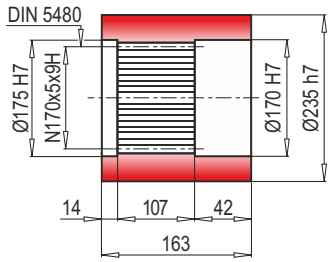

Malzeme / Material
Material / Materiale
Matière / Material
UNI C40
SAE 1040
DIN Ck40

FF
Sabitleme rondelası / Stop bottom plate / Endscheibe
Fondello di arresto / Bouchon de fermeture / Tapón de detención

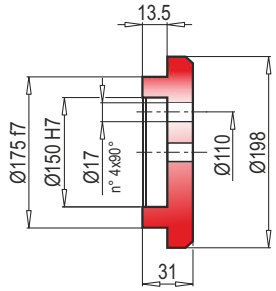

FL
Flanş / Flange / Flansch
Flangia / Bride / Brida

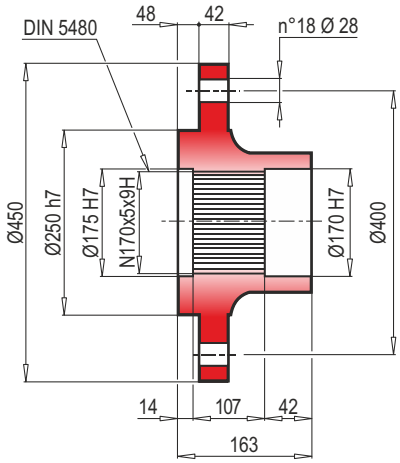

GA
Konik sıktırma / Shrink disc / Schrumpfscheibe
Giunto di attrito / Frette de serrage / Disco de contracción

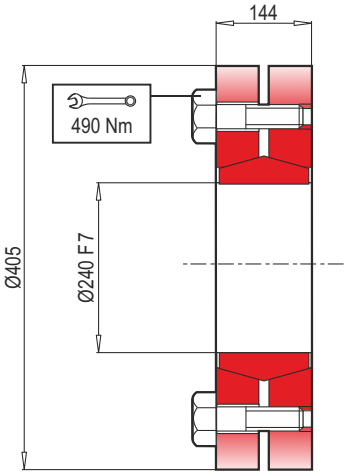

Maksimum moment
Max. torque
Max. Drehmoment
Coppia max.
Couple max.
Momento máx.
236 kNm

TR RADYAL YÜKLER (Fr)

Aşağıdaki grafikler istenilen n_2xh değerinin elde edilmesi için gerekli olan radyal yükleri ve K faktörlerini göstermektedir.

EN RADIAL LOADS (Fr)

The following curves show the radial loads and the K factors to obtain the required n2xh value.

DE RADIALLAST (Fr)

In den nachstehenden Diagrammen ist die Radiallast un der Koeffizient K dargestellt und kann mit dem gewünschten Wert n_2xh verglichen werden.

IT CARICHI RADIALI (Fr)

Nei diagrammi seguenti sono riportati i carichi radiali e i coefficienti K per rapportarli al valore n_2xh desiderato.

FR CHARGES RADIALES (Fr)

Dans les diagrammes suivants sont indiqués les charges radiales et les facteurs K de façon à obtenir la valeur n_2xh désirée.

ES CARGAS RADIALES (Fr)

En los siguientes diagramas se indican las cargas radiales y los coefici - entes K para obtener el valor requerido n_2xh.

M

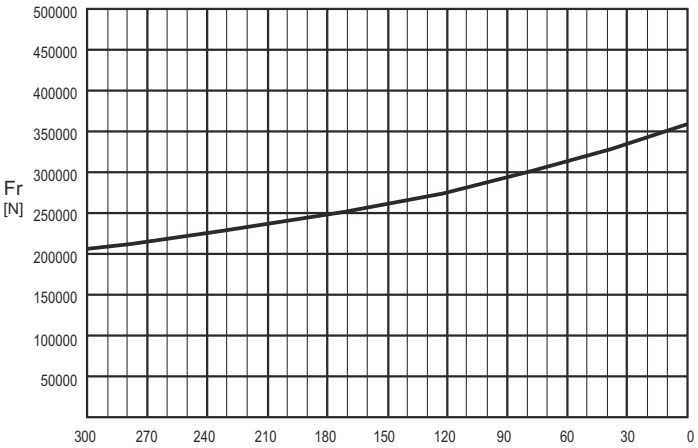

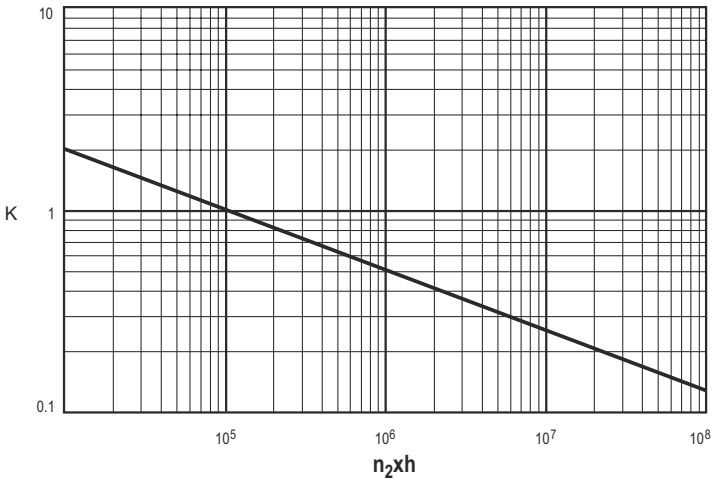

	n_2xh				
	10^5	10^4	10^6	10^7	10^8
M	Fr	Fr • K			

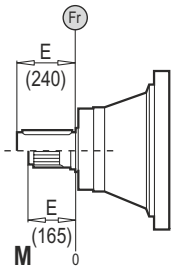

TR EKSENEL YÜKLER (Fa)

Tabloda yer alan eksenel yük değerleri, çıkış tipine ve uygulamanın yük yönüne göre değişir.

EN AXIAL LOADS (Fa)

The values of the axial loads in the table refer to the output versions and load direction of application.

DE AXIALLAST (Fa)

Die dargestellten Werte der Axiallast basieren auf der Version und der applizierten Lastrichtung.

IT CARICHI ASSIALI (Fa)

I valori dei carichi assiali indicati in tabella sono riferiti alle versioni e alla direzione di applicazione del carico.

FR CHARGES AXIALES (Fa)

Les valeurs des charges axiales indiquées dans le tableau se réfèrent aux versions et à la direction d'application de lacharge.

ES CARGAS AXIALES (Fa)

Los valores de las cargas axiales indicados en la tabla se refieren a las versiones y a la dirección de aplicación de la carga.

Fa [N]	M	
	75000	←
	65250	→

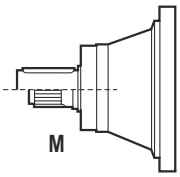

TEKNİK VERİLER / TECHNICAL DATA / TECHNISCHE DATEN / DATI TECNICI / DONNÉES TECHNIQUES / DATOS TÉCNICAS

	i_{ges}	Mmax (n_2 x h: 20000) (Nm)
170001	3.83 ... 4.40	346800
170002	15.15 ... 26.40	299800
170003	53.85 ... 178.20	291000
170004	233.72 ... 1291.95	238800
170005	1093.71 ... 8720.66	253600

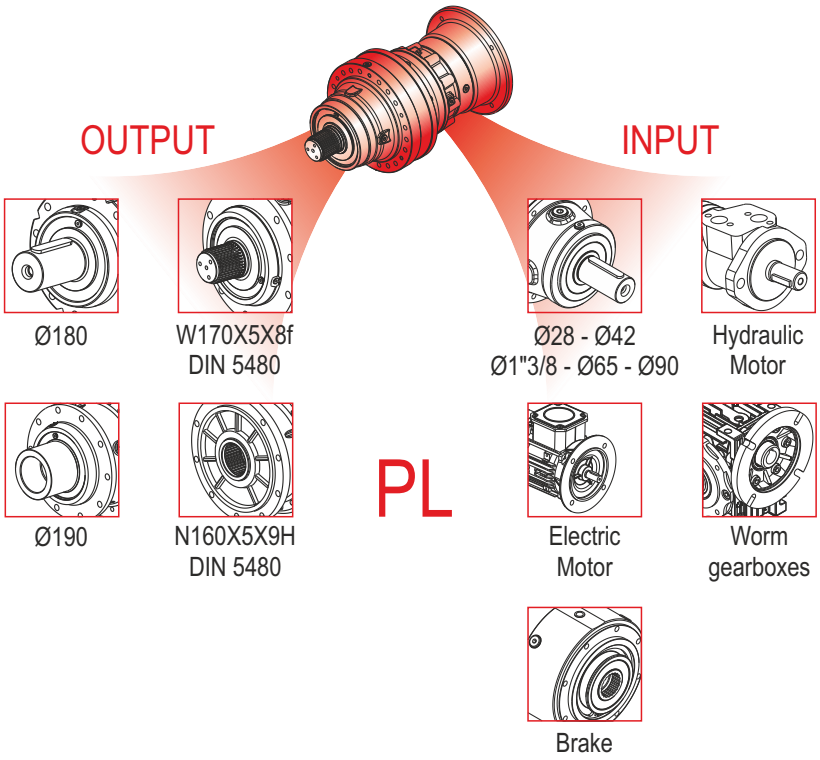

	i_{ges}	Mmax (n_2 x h: 20000) (Nm)
170003	59.55 ... 123.20	145600
170004	251.31 ... 831.60	238800
170005	1128.60 ... 7033.95	238800

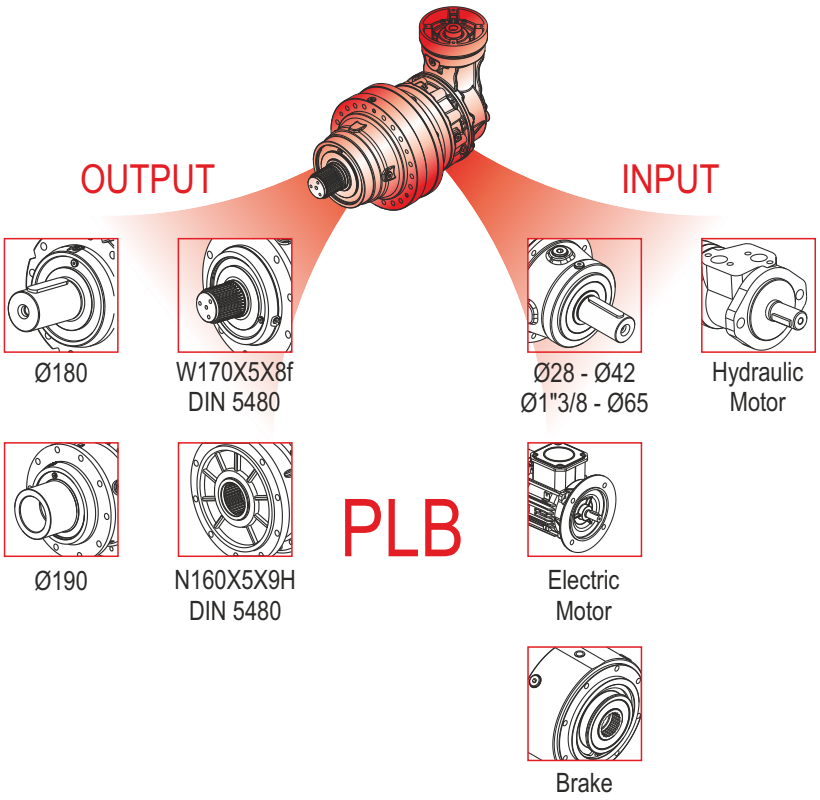

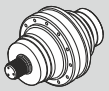	Pt [kW]	n_{1max} [min^{-1}]	i_{ges}	Mc [kNm] n_2 x h 10.000	n_2 x h 20.000	n_2 x h 50.000	n_2 x h 100.000	Giriş- Input - Antrieb - Entrata - Entrée - Entrada IEC (B5)	PMRV / PRV	EL - EML EM - EP - ET
PL 170001	109	200	3.83 4.40	240.7 208.1	216.8 187.4	188.7 163.1	174.9 153.8	160 | 200 | 250 180 | 225 | 280	-	-
PL 170002	67	1200	15.15 17.40 19.39 22.28 26.40	205.5 208.1 150.5 168.6 134.5	181.9 187.4 133.1 149.2 119.0	154.8 163.1 113.3 127.0 101.3	137.0 153.6 100.3 112.4 89.7	160 180 200 225 250	-	ET 90
PL 170003	47	2000	53.85 61.87 74.57 83.10 95.46 108.58 124.74 147.84 178.20	183.3 205.5 179.1 150.5 168.6 149.7 167.9 134.5 134.5	162.3 181.9 158.5 133.1 149.2 132.6 148.6 119.0 119.0	138.0 154.7 134.8 113.3 127.0 112.8 126.5 101.3 101.3	122.2 137.0 119.4 100.3 112.4 99.9 112.0 89.7 89.7	160 180 200 225	110 130 150	EM 65 EM 1"3/8 Z6 EP 65 ET 90
PL 170004	37	2800	233.72 260.44 326.70 360.64 393.79 429.34 493.23 514.55 572.79 644.49 678.86 748.44 820.29 904.37 1069.20 1291.95	161.0 150.5 168.6 168.6 168.6 150.5 168.6 167.9 150.3 167.9 134.5 167.9 134.5 146.7 134.5 134.5	142.6 133.1 149.2 149.2 149.2 133.1 149.2 148.6 133.2 148.6 119.0 148.6 119.0 129.8 119.0 119.0	121.4 113.3 127.0 127.0 127.0 113.3 127.0 126.5 113.3 126.5 101.3 126.5 101.3 110.4 101.3 101.3	107.4 100.3 112.4 112.4 112.4 100.3 112.4 112.0 100.6 112.0 89.7 112.0 89.7 97.9 89.7 89.7	63 71 80 90 100 112 132 160 180	050 063 075 090 110 130 150	EL C 28 EL C 42 EML 42 EML 1"3/8 Z6 EM 65 EM 1"3/8 Z6 EP 65
PL 170005	30	2800	1093.71 1207.35 1318.32 1400.14 1545.61 1651.22 1722.60 1829.52 2019.60 2205.23 2404.28 2661.12 2762.10 3329.32 4350.31 5051.97 6104.46 8720.66	171.2 179.1 171.2 168.6 168.6 139.9 138.7 167.9 158.2 168.6 150.5 167.9 168.6 168.6 167.9 167.9 146.7 134.5	151.7 158.5 151.7 149.2 149.2 124.0 122.6 148.6 139.7 149.2 133.1 148.6 149.2 149.2 148.6 148.6 129.8 119.0	129.2 134.8 129.2 127.0 127.0 105.5 104.3 126.5 118.9 127.0 113.3 126.5 127.0 127.0 126.5 126.5 110.4 101.3	114.2 119.4 114.2 112.4 112.4 93.4 92.2 112.0 105.1 112.4 100.3 112.0 112.4 112.1 112.0 112.0 97.9 89.7	63 71 80 90 100 112 132 160 180	050 063 075 090	EL C 28 EL C 42 EML 42 EML 1"3/8 Z6

	Pt [kW]	n_{1max} [min^{-1}]	i_{ges}	Mc [kNm]				Giriş- Input - Antrieb - Entrata - Entrée - Entrada	
				n_2 x h	n_2 x h	n_2 x h	n_2 x h		
				10.000	20.000	50.000	100.000	IEC (B5)	EL - EML EM - EP - ET
PLB 170003	42	2500	59.55 70.58 81.09 90.48 107.24 123.20	90.3 101.6 112.0 73.8 86.3 97.9	73.3 82.6 91.0 66.9 75.3 83.0	55.7 62.7 69.2 50.8 57.2 63.0	45.3 51.0 56.2 41.2 46.4 51.2	160 180 200 225	EM 65 EM 1"3/8 Z6 EP 65
PLB 170004	35	2500	251.31 321.72 383.13 445.50 506.71 582.12 689.92 723.87 831.60	163.3 150.5 167.9 168.6 149.7 167.9 134.5 120.0 134.5	132.6 133.1 148.6 149.2 132.6 148.6 119.0 106.2 119.0	100.7 113.3 126.5 127.0 112.8 126.5 101.3 90.4 101.3	81.7 97.2 112.0 112.4 99.9 112.0 89.7 80.0 89.7	160 180 200	EM 65 EM 1"3/8 Z6 EP 65
PLB 170005	27	2800	1128.60 1330.99 1417.03 1547.27 1674.75 1777.55 1866.23 2004.14 2226.42 2438.54 2685.38 3054.33 4074.84 4466.00 5821.20 7033.95	168.6 139.9 149.7 149.7 143.5 167.9 150.5 137.0 167.9 149.7 168.6 149.7 167.9 134.5 134.5 134.5	149.2 124.0 132.6 132.6 133.9 148.6 133.1 121.3 148.6 132.6 149.2 132.6 148.6 119.0 119.0 119.0	127.0 105.5 112.8 112.8 119.9 126.5 113.3 103.1 126.5 112.8 127.0 112.8 126.5 101.3 101.3 101.3	112.4 93.4 99.9 99.9 97.2 112.0 100.3 91.4 112.0 99.9 112.4 99.9 112.0 89.7 89.7 89.7	80 90 100 112 132 160 180	EL C 28 EL C 42 EML 42 EML 1"3/8 Z6 EM 65 EM 1"3/8 Z6 EP 65

(n_2 x h = 20.000)

$$M_{max} = M_C \times 1.6$$

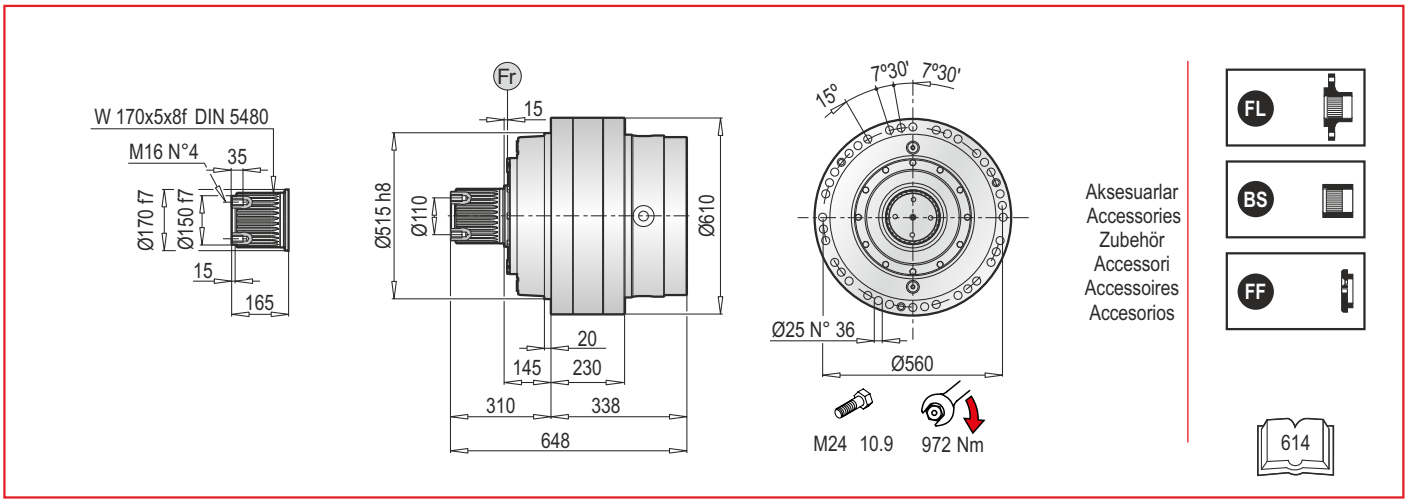

PL 170000 MS - Elektrik Motor Adaptörleri (IEC) / Electrıc Motor Couplings (IEC) / Anbauvorrichtung Für Elektromotore (IEC) / Predisposizioni Per Motori Elettrici (IEC) / Adaptations Pour Moteurs Electriques (IEC) / Acoplamientos Para Motores Eléctricos (IEC)

PL	IEC 63			IEC 71			IEC 80			IEC 90			IEC 100			IEC 112			IEC 132		
	LT	Z	ØD	LT	Z	ØD	LT	Z	ØD	LT	Z	ØD	LT	Z	ØD	LT	Z	ØD	LT	Z	ØD
170001	-			-			-			-			-			-			-		
170002	-			-			-			-			-			-			-		
170003	-			-			-			-			-			-			-		
170004	852	36	140	852	36	160	876	56	200	876	56	200	886	66	250	886	66	250	916	100	300
170005	913			913			933			933			943			943			977		

PL	IEC 160			IEC 180			IEC 200			IEC 225			IEC 250			IEC 280		
	LT	Z	ØD	LT	Z	ØD	LT	Z	ØD	LT	Z	ØD	LT	Z	ØD	LT	Z	ØD
170001	-	150		-	150		-	150		-			-	139	550	-	139	550
170002	787.5			787.5			787.5		400	776.5	139	450	776.5			-		
170003	862.5	118	350	862.5	118	350	892.5	148		883.5			-			-		
170004	955	139		955	139		-			-			-			-		
170005	1016			1016			-			-			-			-		

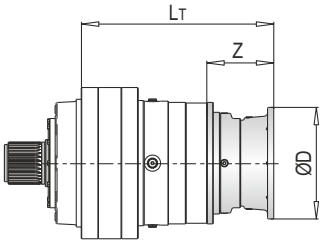

PL	IEC ~ Kg												
	63	71	80	90	100	112	132	160	180	200	225	250	280
170001	-	-	-	-	-	-	-	740	740	745	751	763	775
170002	-	-	-	-	-	-	-	967	967	977	983	995	-
170003	-	-	-	-	-	-	-	987	987	997	1007	-	-
170004	990	990	992	992	993	993	997	1007	1007	-	-	-	-
170005	1000	1000	1002	1002	1003	1003	1007	1017	1017	-	-	-	-

PL 170000 MS - Giriş Milleri / Input Shafts / Antriebswellen / Alberi Entrata / Arbres D'entree / Ejes De Entrada

PL	EL C 28				EL C 42				EML 42				EML 1"3/8 Z6				EM 65				EM 1"3/8 Z6			
	LT	Z	L	Ød	LT	Z	L	Ød	LT	Z	L	Ød	LT	Z	L	Ød	LT	Z	L	Ød	LT	Z	L	Ød
170002	-				-				-				-				-				-			
170003	-				-				-				-				856	121.5	105	65	866	121.5	105	1"3/8
170004	880	64	50	28	880	64	82	42	910	94	82	42	910	94	106	1"3/8	937.5				937.5			
170005	941				941				971				971				-				-			

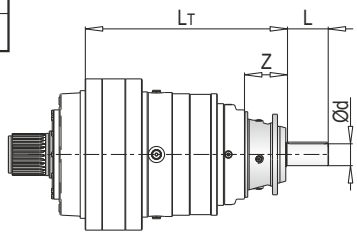

PL	EP 65				ET 90			
	LT	Z	L	Ød	LT	Z	L	Ød
170002	-				809	171.5	170	90
170003	897.5	153	105	65	916			
170004	969				-			
170005	-				-			

PL	~ Kg							
	EL C 28	EL C 42	EML 42	EML 1"3/8 Z6	EM 65	EM 1"3/8 Z6	EP 65	ET 90
170002	-	-	-	-	-	-	-	975
170003	-	-	-	-	987	987	996	1018
170004	990.5	991	994	994	1002	1002	1011	-
170005	1000.5	1001	1004	1004	-	-	-	-

PL 170000 MS - Sonsuz Dişlili Redüktör Adaptörleri (PMRV/PRV) / Worm Gearbox Adaptors (PMRV/PRV) / Anschluss Für Schneckengetriebe (PMRV/PRV) / Predisposizioni Per Riduttori A Vite Senza Fine (PMRV/PRV) / Adaptation Pour Reducteurs A Vis Sans Fin (PMRV/PRV) / Acoplamiento Para Reductores De Tornillo Sin Fin (PMRV/PRV)

PL	PMRV/PRV 050					PMRV/PRV 063					PMRV/PRV 075				
	LM	l	h	MA	G	LM	l	h	MA	G	LM	l	h	MA	G
170003	-					-					-				
170004	937.5	50	110	60	80	947	63	113	72	95	926	75	161	86	112.5
170005	998.5					1008					987				

PL	PMRV/PRV 090					PMRV/PRV 110					PMRV/PRV 130				
	LM	l	h	MA	G	LM	l	h	MA	G	LM	l	h	MA	G
170003	-					878.5	110	237.5	127.5	160	884	130	277.5	147.5	180
170004	936	90	193	103	129.5	950					955.5				
170005	997					-					-				

PL	PMRV/PRV 150				
	LM	l	h	MA	G
170003	900.5	150	320	170	210
170004	972				
170005	-				

PL	PMRV/PRV ~ Kg						
	050	063	075	090	110	130	150
170003	-	-	-	-	1016	1033	1069
170004	993	996.5	999	1004	1031	1048	1084
170005	1003	1006.5	1009	1013	-	-	-

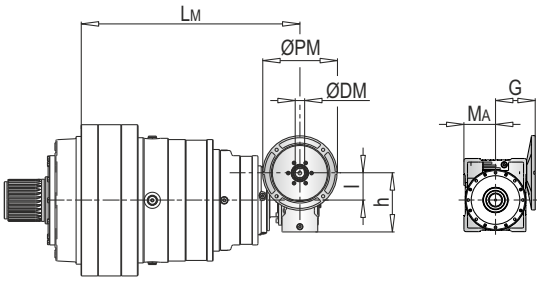

ØPM
ØDM
105

PLB 170000 MS - Elektrik Motor Adaptörleri (IEC) / Electric Motor Couplings (IEC) / Anbauvorrichtung Für Elektromotore (IEC) / Predisposizioni Per Motori Elettrici (IEC) / Adaptations Pour Moteurs Electriques (IEC) / Acoplamientos Para Motores Eléctricos (IEC)

PLB	IEC 80				IEC 90				IEC 100				IEC 112				IEC 132			
	A	LT	Z	ØD	A	LT	Z	ØD	A	LT	Z	ØD	A	LT	Z	ØD	A	LT	Z	ØD
170003	-				-				-				-				-			
170004	-				-				-				-				-			
170005	917.5	296	56	200	917.5	296	56	200	917.5	306	66	250	917.5	306	66	250	917.5	340	100	300

PLB	IEC 160				IEC 180				IEC 200				IEC 225			
	A	LT	Z	ØD	A	LT	Z	ØD	A	LT	Z	ØD	A	LT	Z	ØD
170003	818.5	433	118	350	818.5	433	118	350	818.5	463	148	400	818.5	454	139	450
170004	879.5				879.5				879.5				-			
170005	917.5	358	139		917.5	358	139		-				-			

PLB	IEC ~ Kg								
	80	90	100	112	132	160	180	200	225
170003	-	-	-	-	-	1032	1032	1042	1047
170004	-	-	-	-	-	1065	1065	1075	-
170005	1035	1035	1036	1036	1040	1050	1050	-	-

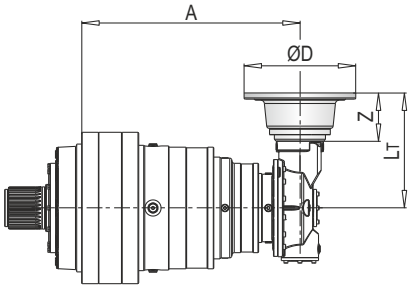

103

PLB 170000 MS - Giriş Milleri / Input Shafts / Antriebswellen / Alberi Entrata / Arbres D'entree / Ejes De Entrada

PLB	EL C 28					EL C 42					EML 42					EML 1"3/8 Z6					EM 65				
	A	LT	Z	L	Ød	A	LT	Z	L	Ød	A	LT	Z	L	Ød	A	LT	Z	L	Ød	A	LT	Z	L	Ød
170003	-					-					-					-					818.5	436.5	121.5	105	65
170004	-					-					-					-					879.5				
170005	917.5	304	64	50	28	917.5	304	64	82	42	917.5	334	94	82	42	917.5	334	94	106	1"3/8	917.5	361.5			

PLB	EM 1"3/8 Z6					EP 65				
	A	LT	Z	L	Ød	A	LT	Z	L	Ød
170003	818.5	436.5	121.5	105	1"3/8	818.5	468	153	105	65
170004	879.5					879.5				
170005	917.5	361.5				917.5	393			

PLB	~ Kg						
	EL C 28	EL C 42	EML 42	EML 1"3/8 Z6	EM 65	EM 1"3/8 Z6	EP 65
170003	-	-	-	-	1027	1027	1036
170004	-	-	-	-	1060	1060	1069
170005	1033.5	1034	1037	1037	1045	1045	1054

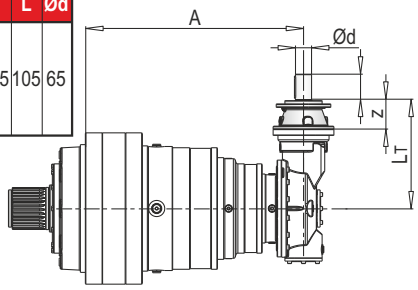

Ød
88-90

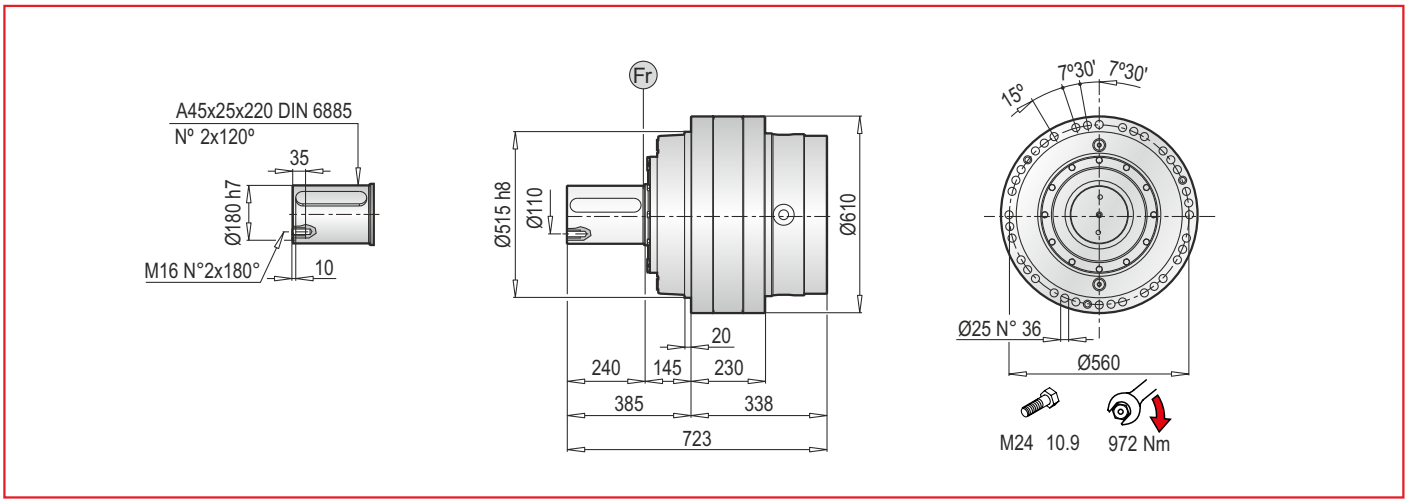

PL 170000 MC - Elektrik Motor Adaptörleri (IEC) / Electrıc Motor Couplings (IEC) / Anbauvorrichtung Für Elektromotore (IEC) / Predisposizioni Per Motori Elettrici (IEC) / Adaptations Pour Moteurs Electriques (IEC) / Acoplamientos Para Motores Eléctricos (IEC)

PL	IEC 63			IEC 71			IEC 80			IEC 90			IEC 100			IEC 112			IEC 132		
	LT	Z	ØD	LT	Z	ØD	LT	Z	ØD	LT	Z	ØD	LT	Z	ØD	LT	Z	ØD	LT	Z	ØD
170001	-			-			-			-			-			-			-		
170002	-			-			-			-			-			-			-		
170003	-			-			-			-			-			-			-		
170004	852	36	140	852	36	160	876	56	200	876	56	200	886	66	250	886	66	250	916	100	300
170005	913			913			933			933			943			943			977		

PL	IEC 160			IEC 180			IEC 200			IEC 225			IEC 250			IEC 280		
	LT	Z	ØD	LT	Z	ØD	LT	Z	ØD	LT	Z	ØD	LT	Z	ØD	LT	Z	ØD
170001	-	150		-	150		-	150		-			-	139	550	-	139	550
170002	787.5			787.5			787.5		400	776.5	139	450	776.5			-		
170003	862.5	118	350	862.5	118	350	892.5	148		883.5			-			-		
170004	955	139		955	139		-			-			-			-		
170005	1016			1016			-			-			-			-		

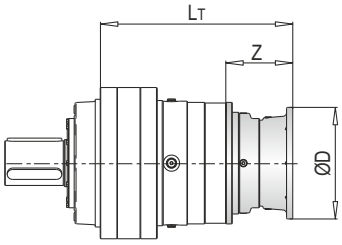

PL	IEC ~ Kg												
	63	71	80	90	100	112	132	160	180	200	225	250	280
170001	-	-	-	-	-	-	-	740	740	745	751	763	775
170002	-	-	-	-	-	-	-	967	967	977	983	995	-
170003	-	-	-	-	-	-	-	987	987	997	1007	-	-
170004	990	990	992	992	993	993	997	1007	1007	-	-	-	-
170005	1000	1000	1002	1002	1003	1003	1007	1017	1017	-	-	-	-

PL 170000 MC - Giriş Milleri / Input Shafts / Antriebswellen / Alberi Entrata / Arbres D'entree / Ejes De Entrada

PL	EL C 28				EL C 42				EML 42				EML 1"3/8 Z6				EM 65				EM 1"3/8 Z6			
	LT	Z	L	Ød	LT	Z	L	Ød	LT	Z	L	Ød	LT	Z	L	Ød	LT	Z	L	Ød	LT	Z	L	Ød
170002	-				-				-				-				-				-			
170003	-				-				-				-				856	121.5	105	65	866	121.5	105	1"3/8
170004	880	64	50	28	880	64	82	42	910	94	82	42	910	94	106	1"3/8	937.5				937.5			
170005	941				941				971				971				-				-			

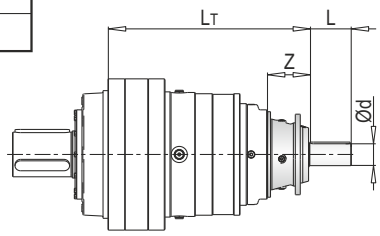

PL	EP 65				ET 90			
	LT	Z	L	Ød	LT	Z	L	Ød
170002	-				809	171.5	170	90
170003	897.5	153	105	65	916			
170004	969				-			
170005	-				-			

PL	~ Kg							
	EL C 28	EL C 42	EML 42	EML 1"3/8 Z6	EM 65	EM 1"3/8 Z6	EP 65	ET 90
170002	-	-	-	-	-	-	-	975
170003	-	-	-	-	987	987	996	1018
170004	990.5	991	994	994	1002	1002	1011	-
170005	1000.5	1001	1004	1004	-	-	-	-

PL 170000 MC - Sonsuz Dişlili Redüktör Adaptörleri (PMRV/PRV) / Worm Gearbox Adaptors (PMRV/PRV) / Anschluss Für Schneckengetriebe (PMRV/PRV) / Predisposizioni Per Riduttori A Vite Senza Fine (PMRV/PRV) / Adaptation Pour Reducteurs A Vis Sans Fin (PMRV/PRV) / Acoplamiento Para Reductores De Tornillo Sin Fin (PMRV/PRV)

PL	PMRV/PRV 050					PMRV/PRV 063					PMRV/PRV 075				
	LM	l	h	MA	G	LM	l	h	MA	G	LM	l	h	MA	G
170003	-					-					-				
170004	937.5	50	110	60	80	947	63	113	72	95	926	75	161	86	112.5
170005	998.5					1008					987				

PL	PMRV/PRV 090					PMRV/PRV 110					PMRV/PRV 130				
	LM	l	h	MA	G	LM	l	h	MA	G	LM	l	h	MA	G
170003	-					878.5	110	237.5	127.5	160	884	130	277.5	147.5	180
170004	936	90	193	103	129.5	950					955.5				
170005	997					-					-				

PL	PMRV/PRV 150				
	LM	l	h	MA	G
170003	900.5	150	320	170	210
170004	972				
170005	-				

PL	PMRV/PRV ~ Kg						
	050	063	075	090	110	130	150
170003	-	-	-	-	1016	1033	1069
170004	993	996.5	999	1004	1031	1048	1084
170005	1003	1006.5	1009	1013	-	-	-

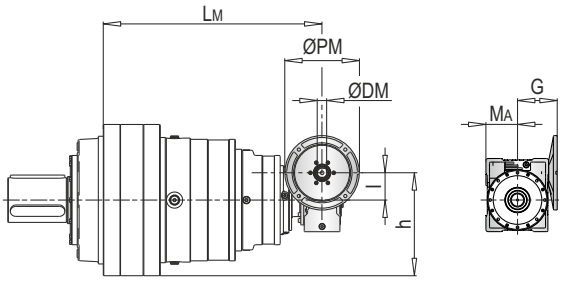

ØPM
ØDM
105

PLB 170000 MC - Elektrik Motor Adaptörleri (IEC) / Electric Motor Couplings (IEC) / Anbauvorrichtung Für Elektromotore (IEC) / Predisposizioni Per Motori Elettrici (IEC) / Adaptations Pour Moteurs Electriques (IEC) / Acoplamientos Para Motores Eléctricos (IEC)

PLB	IEC 80				IEC 90				IEC 100				IEC 112				IEC 132			
	A	LT	Z	ØD	A	LT	Z	ØD	A	LT	Z	ØD	A	LT	Z	ØD	A	LT	Z	ØD
170003	-				-				-				-				-			
170004	-				-				-				-				-			
170005	917.5	296	56	200	917.5	296	56	200	917.5	306	66	250	917.5	306	66	250	917.5	340	100	300

PLB	IEC 160				IEC 180				IEC 200				IEC 225			
	A	LT	Z	ØD	A	LT	Z	ØD	A	LT	Z	ØD	A	LT	Z	ØD
170003	818.5	433	118	350	818.5	433	118	350	818.5	463	148	400	818.5	454	139	450
170004	879.5				879.5				879.5				-			
170005	917.5	358	139		917.5	358	139		-				-			

PLB	IEC ~ Kg								
	80	90	100	112	132	160	180	200	225
170003	-	-	-	-	-	1032	1032	1042	1047
170004	-	-	-	-	-	1065	1065	1075	-
170005	1035	1035	1036	1036	1040	1050	1050	-	-

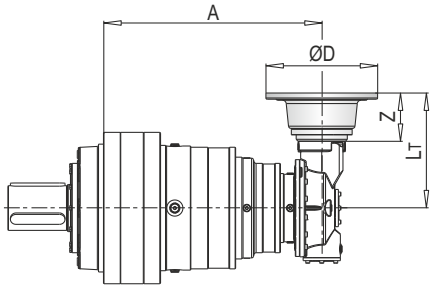

103

PLB 170000 MC - Giriş Milleri / Input Shafts / Antriebswellen / Alberi Entrata / Arbres D'entree / Ejes De Entrada

PLB	EL C 28					EL C 42					EML 42					EML 1"3/8 Z6					EM 65				
	A	LT	Z	L	Ød	A	LT	Z	L	Ød	A	LT	Z	L	Ød	A	LT	Z	L	Ød	A	LT	Z	L	Ød
170003	-					-					-					-					818.5	436.5	121.5	105	65
170004	-					-					-					-					879.5				
170005	917.5	304	64	50	28	917.5	304	64	82	42	917.5	334	94	82	42	917.5	334	94	106	1"3/8	917.5	361.5			

PLB	EM 1"3/8 Z6					EP 65				
	A	LT	Z	L	Ød	A	LT	Z	L	Ød
170003	818.5	436.5	121.5	105	1"3/8	818.5	468	153	105	65
170004	879.5					879.5				
170005	917.5	361.5				917.5	393			

PLB	~ Kg						
	EL C 28	EL C 42	EML 42	EML 1"3/8 Z6	EM 65	EM 1"3/8 Z6	EP 65
170003	-	-	-	-	1027	1027	1036
170004	-	-	-	-	1060	1060	1069
170005	1033.5	1034	1037	1037	1045	1045	1054

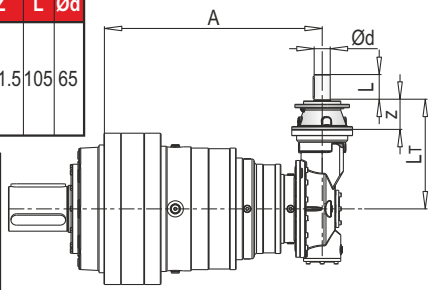

Ød
88-90

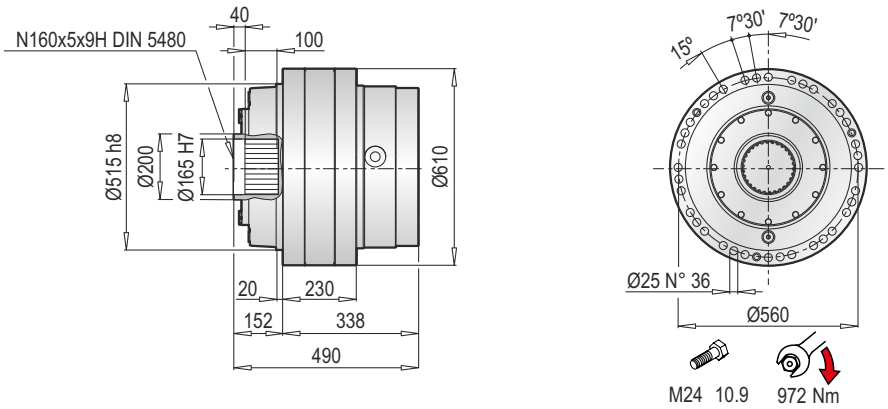

PL 170000 F - Elektrik Motor Adaptörleri (IEC) / Electric Motor Couplings (IEC) /Anbauvorrichtung Für Elektromotore (IEC) / Predisposizioni Per Motori Elettrici (IEC) / Adaptations Pour Moteurs Electriques (IEC) /Acoplamientos Para Motores Eléctricos (IEC)

PL	IEC 63			IEC 71			IEC 80			IEC 90			IEC 100			IEC 112			IEC 132		
	LT	Z	ØD	LT	Z	ØD	LT	Z	ØD	LT	Z	ØD	LT	Z	ØD	LT	Z	ØD	LT	Z	ØD
170001	-			-			-			-			-			-			-		
170002	-			-			-			-			-			-			-		
170003	-			-			-			-			-			-			-		
170004	852	36	140	852	36	160	876	56	200	876	56	200	886	66	250	886	66	250	916	100	300
170005	913			913			933			933			943			943			977		

PL	IEC 160			IEC 180			IEC 200			IEC 225			IEC 250			IEC 280		
	LT	Z	ØD	LT	Z	ØD	LT	Z	ØD	LT	Z	ØD	LT	Z	ØD	LT	Z	ØD
170001	-	150	350	-	150	350	-	150	400	-	139	450	-	139	550	-	139	550
170002	787.5			787.5			787.5			776.5			776.5			-		
170003	862.5	118		862.5	118		892.5	148		883.5			-			-		
170004	955	139		955	139		-			-			-			-		
170005	1016			1016			-			-			-			-		

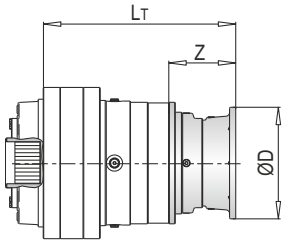

PL	IEC ~ Kg												
	63	71	80	90	100	112	132	160	180	200	225	250	280
170001	-	-	-	-	-	-	-	705	705	710	716	728	740
170002	-	-	-	-	-	-	-	937	937	942	948	960	-
170003	-	-	-	-	-	-	-	957	957	967	972	-	-
170004	955	955	957	957	958	958	962	972	972	-	-	-	-
170005	965	965	967	967	968	968	972	982	982	-	-	-	-

PL 170000 F - Giriş Milleri / Input Shafts / Antriebswellen / Alberi Entrata / Arbres D'entree / Ejes De Entrada

PL	EL C 28				EL C 42				EML 42				EML 1"3/8 Z6				EM 65				EM 1"3/8 Z6			
	LT	Z	L	Ød	LT	Z	L	Ød	LT	Z	L	Ød	LT	Z	L	Ød	LT	Z	L	Ød	LT	Z	L	Ød
170002	-				-				-				-				-				-			
170003	-				-				-				-				856	121.5	105	65	866	121.5	105	1"3/8
170004	880	64	50	28	880	64	82	42	910	94	82	42	910	94	106	1"3/8	937.5				937.5			
170005	941				941				971				971				-				-			

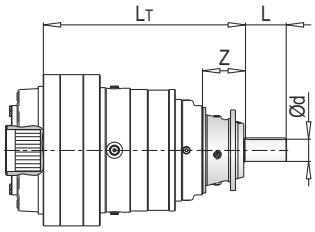

PL	EP 65				ET 90			
	LT	Z	L	Ød	LT	Z	L	Ød
170002	-				809	171.5	170	90
170003	897.5	153	105	65	916			
170004	969				-			
170005	-				-			

PL	~ Kg							
	EL C 28	EL C 42	EML 42	EML 1"3/8 Z6	EM 65	EM 1"3/8 Z6	EP 65	ET 90
170002	-	-	-	-	-	-	-	940
170003	-	-	-	-	952	952	961	1018
170004	955.5	956	959	959	967	967	976	-
170005	965.5	966	969	969	-	-	-	-

PL 170000 F - Sonsuz Dişlili Redüktör Adaptörleri (PMRV/PRV) / Worm Gearbox Adaptors (PMRV/PRV) / Anschluss Für Schneckengetriebe (PMRV/PRV) / Predisposizioni Per Riduttori A Vite Senza Fine (PMRV/PRV) / Adaptation Pour Reducteurs A Vis Sans Fin (PMRV/PRV) / Acoplamiento Para Reductores De Tornillo Sin Fin (PMRV/PRV)

PL	PMRV/PRV 050					PMRV/PRV 063					PMRV/PRV 075				
	LM	l	h	MA	G	LM	l	h	MA	G	LM	l	h	MA	G
170003	-					-					-				
170004	937.5	50	110	60	80	947	63	113	72	95	926	75	161	86	112.5
170005	998.5					1008					987				

PL	PMRV/PRV 090					PMRV/PRV 110					PMRV/PRV 130				
	LM	l	h	MA	G	LM	l	h	MA	G	LM	l	h	MA	G
170003	-					878.5	110	237.5	127.5	160	884	130	277.5	147.5	180
170004	936	90	193	103	129.5	950					955.5				
170005	997					-					-				

PL	PMRV/PRV 150				
	LM	l	h	MA	G
170003	900.5	150	320	170	210
170004	972				
170005	-				

PL	PMRV/PRV ~ Kg						
	050	063	075	090	110	130	150
170003	-	-	-	-	1016	1033	1061
170004	993	996.5	999	1004	1031	1048	1076
170005	1003	1006.5	1009	1014	-	-	-

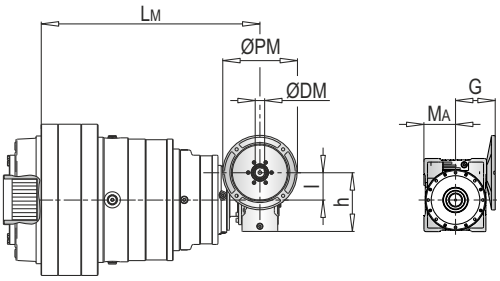

ØPM
ØDM
105

PLB 170000 F - Elektrik Motor Adaptörleri (IEC) / Electric Motor Couplings (IEC) / Anbauvorrichtung Für Elektromotore (IEC) / Predisposizioni Per Motori Elettrici (IEC) / Adaptations Pour Moteurs Electriques (IEC) / Acoplamientos Para Motores Eléctricos (IEC)

PLB	IEC 80				IEC 90				IEC 100				IEC 112				IEC 132			
	A	LT	Z	ØD	A	LT	Z	ØD	A	LT	Z	ØD	A	LT	Z	ØD	A	LT	Z	ØD
170003	-				-				-				-				-			
170004	-				-				-				-				-			
170005	917.5	296	56	200	917.5	296	56	200	917.5	306	66	250	917.5	306	66	250	917.5	340	100	300

PLB	IEC 160				IEC 180				IEC 200				IEC 225			
	A	LT	Z	ØD	A	LT	Z	ØD	A	LT	Z	ØD	A	LT	Z	ØD
170003	818.5	433	118	350	818.5	433	118	350	818.5	463	148	400	818.5	454	139	450
170004	879.5				879.5				879.5				-			
170005	917.5	358	139		917.5	358	139		-				-			

PLB	IEC ~ Kg								
	80	90	100	112	132	160	180	200	225
170003	-	-	-	-	-	997	997	1007	1064
170004	-	-	-	-	-	1030	1030	1040	-
170005	1000	1000	1001	1001	1005	1015	1015	-	-

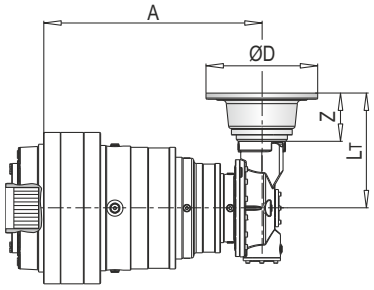

103

PLB 170000 F - Giriş Milleri / Input Shafts / Antriebswellen / Alberi Entrata / Arbres D'entree / Ejes De Entrada

PLB	EL C 28					EL C 42					EML 42					EML 1"3/8 Z6					EM 65				
	A	LT	Z	L	Ød	A	LT	Z	L	Ød	A	LT	Z	L	Ød	A	LT	Z	L	Ød	A	LT	Z	L	Ød
170003	-					-					-					-					818.5	436.5	121.5	105	65
170004	-					-					-					-					879.5				
170005	917.5	304	64	50	28	917.5	304	64	82	42	917.5	334	94	82	42	917.5	334	94	106	1"3/8	917.5	361.5			

PLB	EM 1"3/8 Z6					EP 65				
	A	LT	Z	L	Ød	A	LT	Z	L	Ød
170003	818.5	436.5	121.5	105	1"3/8	818.5	468	153	105	65
170004	879.5					879.5				
170005	917.5	361.5				917.5	393			

PLB	~ Kg						
	EL C 28	EL C 42	EML 42	EML 1"3/8 Z6	EM 65	EM 1"3/8 Z6	EP 65
170003	-	-	-	-	992	992	1001
170004	-	-	-	-	1025	1025	1034
170005	980.5	981	984	984	1010	1010	1019

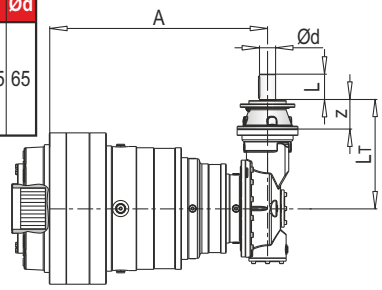

Ød
88-90

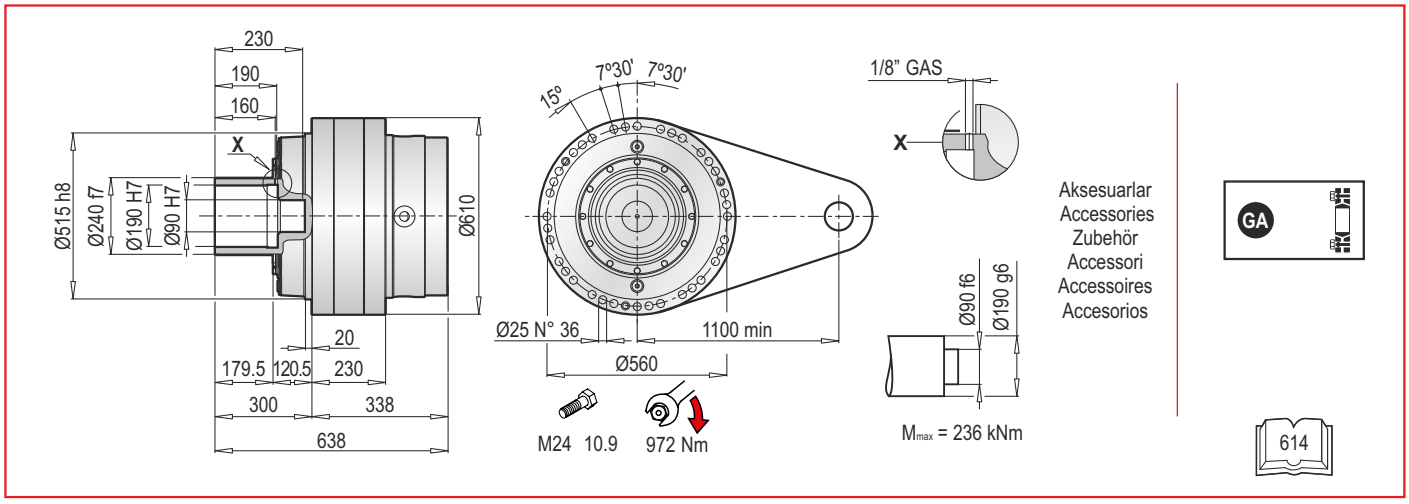

PL 170000 FS - Elektrik Motor Adaptörleri (IEC) / Electrıc Motor Couplings (IEC) / Anbauvorrichtung Für Elektromotore (IEC) / Predisposizioni Per Motori Elettrici (IEC) / Adaptations Pour Moteurs Electriques (IEC) / Acoplamientos Para Motores Eléctricos (IEC)

PL	IEC 63			IEC 71			IEC 80			IEC 90			IEC 100			IEC 112			IEC 132		
	LT	Z	ØD	LT	Z	ØD	LT	Z	ØD	LT	Z	ØD	LT	Z	ØD	LT	Z	ØD	LT	Z	ØD
170001	-			-			-			-			-			-			-		
170002	-			-			-			-			-			-			-		
170003	-			-			-			-			-			-			-		
170004	852	36	140	852	36	160	876	56	200	876	56	200	886	66	250	886	66	250	916	100	300
170005	913			913			933			933			943			943			977		

PL	IEC 160			IEC 180			IEC 200			IEC 225			IEC 250			IEC 280		
	LT	Z	ØD	LT	Z	ØD	LT	Z	ØD	LT	Z	ØD	LT	Z	ØD	LT	Z	ØD
170001	-	150		-	150		-	150		-			-	139	550	-	139	550
170002	787.5			787.5			787.5		400	776.5	139	450	776.5			-		
170003	862.5	118	350	862.5	118	350	892.5	148		883.5			-			-		
170004	955	139		955	139		-			-			-			-		
170005	1016			1016			-			-			-			-		

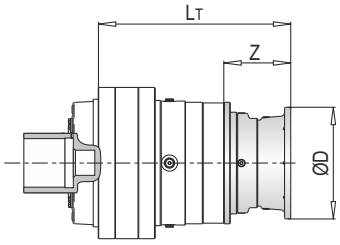

PL	IEC ~ Kg												
	63	71	80	90	100	112	132	160	180	200	225	250	280
170001	-	-	-	-	-	-	-	722	722	727	733	745	757
170002	-	-	-	-	-	-	-	964	964	969	975	987	-
170003	-	-	-	-	-	-	-	984	984	994	999	-	-
170004	982	982	984	984	985	985	989	999	999	1009	1014	-	-
170005	992	992	994	994	995	995	999	1009	1009	1019	-	-	-

PL 170000 FS - Giriş Milleri / Input Shafts / Antriebswellen / Alberi Entrata / Arbres D'entree / Ejes De Entrada

PL	EL C 28				EL C 42				EML 42				EML 1"3/8 Z6				EM 65				EM 1"3/8 Z6			
	LT	Z	L	Ød	LT	Z	L	Ød	LT	Z	L	Ød	LT	Z	L	Ød	LT	Z	L	Ød	LT	Z	L	Ød
170002	-				-				-				-				-				-			
170003	-				-				-				-				856	121.5	105	65	866	121.5	105	1"3/8
170004	880	64	50	28	880	64	82	42	910	94	82	42	910	94	106	1"3/8	937.5				937.5			
170005	941				941				971				971				-				-			

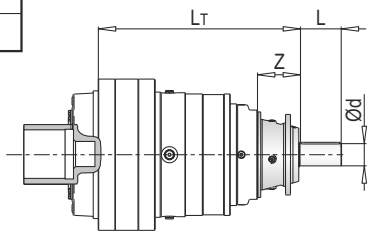

PL	EP 65				ET 90			
	LT	Z	L	Ød	LT	Z	L	Ød
170002	-				809	171.5	170	90
170003	897.5	153	105	65	916			
170004	969				-			
170005	-				-			

PL	~ Kg							
	EL C 28	EL C 42	EML 42	EML 1"3/8 Z6	EM 65	EM 1"3/8 Z6	EP 65	ET 90
170002	-	-	-	-	-	-	-	967
170003	-	-	-	-	979	979	988	1045
170004	982.5	983	986	986	994	994	1003	-
170005	992.5	993	996	996	-	-	-	-

PL 170000 FS - Sonsuz Dişlili Redüktör Adaptörleri (PMRV/PRV) / Worm Gearbox Adaptors (PMRV/PRV) / Anschluss Für Schneckengetriebe (PMRV/PRV) / Predisposizioni Per Riduttori A Vite Senza Fine (PMRV/PRV) / Adaptation Pour Reducteurs A Vis Sans Fin (PMRV/PRV) / Acoplamiento Para Reductores De Tornillo Sin Fin (PMRV/PRV)

PL	PMRV/PRV 050					PMRV/PRV 063					PMRV/PRV 075				
	LM	l	h	MA	G	LM	l	h	MA	G	LM	l	h	MA	G
170003	-					-					-				
170004	937.5	50	110	60	80	947	63	113	72	95	926	75	161	86	112.5
170005	998.5					1008					987				

PL	PMRV/PRV 090					PMRV/PRV 110					PMRV/PRV 130				
	LM	l	h	MA	G	LM	l	h	MA	G	LM	l	h	MA	G
170003	-					878.5	110	237.5	127.5	160	884	130	277.5	147.5	180
170004	936	90	193	103	129.5	950					955.5				
170005	997					-					-				

PL	PMRV/PRV 150				
	LM	l	h	MA	G
170003	900.5	150	320	170	210
170004	972				
170005	-				

PL	PMRV/PRV ~ Kg						
	050	063	075	090	110	130	150
170003	-	-	-	-	968	1025	1061
170004	985	988.5	991	996	1023	1040	1076
170005	995	998.5	1001	1006	-	-	-

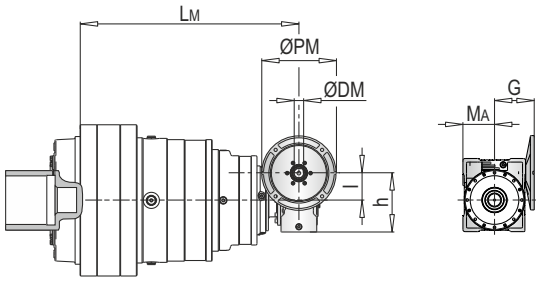

ØPM
ØDM
105

PLB 170000 FS - Elektrik Motor Adaptörleri (IEC) / Electric Motor Couplings (IEC) / Anbauvorrichtung Für Elektromotore (IEC) / Predisposizioni Per Motori Elettrici (IEC) / Adaptations Pour Moteurs Electriques (IEC) / Acoplamientos Para Motores Eléctricos (IEC)

PLB	IEC 80				IEC 90				IEC 100				IEC 112				IEC 132			
	A	LT	Z	ØD	A	LT	Z	ØD	A	LT	Z	ØD	A	LT	Z	ØD	A	LT	Z	ØD
170003	-				-				-				-				-			
170004	-				-				-				-				-			
170005	917.5	296	56	200	917.5	296	56	200	917.5	306	66	250	917.5	306	66	250	917.5	340	100	300

PLB	IEC 160				IEC 180				IEC 200				IEC 225			
	A	LT	Z	ØD	A	LT	Z	ØD	A	LT	Z	ØD	A	LT	Z	ØD
170003	818.5	433	118	350	818.5	433	118	350	818.5	463	148	400	818.5	454	139	450
170004	879.5				879.5				879.5				-			
170005	917.5	358	139		917.5	358	139		-				-			

PLB	IEC ~ Kg								
	80	90	100	112	132	160	180	200	225
170003	-	-	-	-	-	1024	1024	1034	1039
170004	-	-	-	-	-	1057	1057	1067	-
170005	1027	1027	1028	1028	1032	1042	1042	-	-

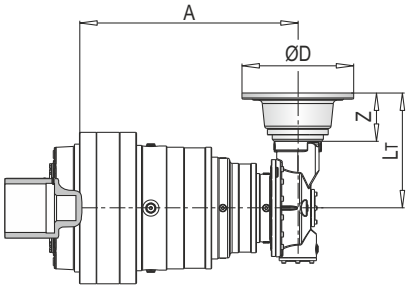

103

PLB 170000 FS - Giriş Milleri / Input Shafts / Antriebswellen / Alberi Entrata / Arbres D'entree / Ejes De Entrada

PLB	EL C 28					EL C 42					EML 42					EML 1"3/8 Z6					EM 65				
	A	LT	Z	L	Ød	A	LT	Z	L	Ød	A	LT	Z	L	Ød	A	LT	Z	L	Ød	A	LT	Z	L	Ød
170003	-					-					-					-					818.5	436.5	121.5	105	65
170004	-					-					-					-					879.5				
170005	917.5	304	64	50	28	917.5	304	64	82	42	917.5	334	94	82	42	917.5	334	94	106	1"3/8	917.5	361.5			

PLB	EM 1"3/8 Z6					EP 65				
	A	LT	Z	L	Ød	A	LT	Z	L	Ød
170003	818.5	436.5	121.5	105	1"3/8	818.5	468	153	105	65
170004	879.5					879.5				
170005	917.5	361.5				917.5	393			

PLB	~ Kg						
	EL C 28	EL C 42	EML 42	EML 1"3/8 Z6	EM 65	EM 1"3/8 Z6	EP 65
170003	-	-	-	-	1019	1019	1028
170004	-	-	-	-	1052	1052	1061
170005	1025.5	1026	1029	1029	1037	1037	1046

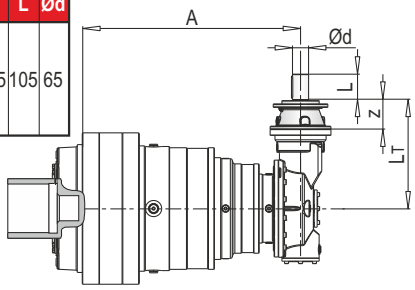

Ød
88-90

AKSESUARLAR / ACCESSORIES / ZUBEHÖR / ACCESSORI / ACCESSOIRES / ACCESORIOS

BS
Spline kaplin / Splined bushing / Innenverzahnte Buchse
Boccola scanalata / Moyeu cannelé / Casquillo ranurado

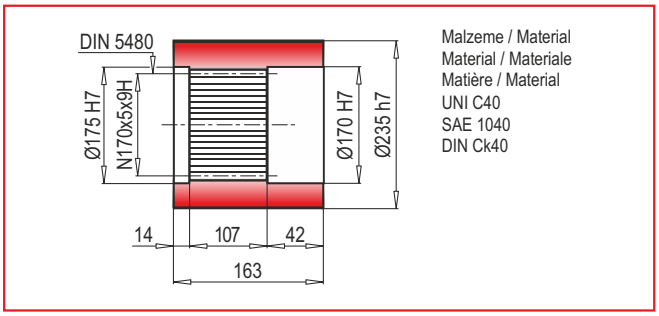

FF
Sabitleme rondelası / Stop bottom plate / Endscheibe
Fondello di arresto / Bouchon de fermeture / Tapón de detención

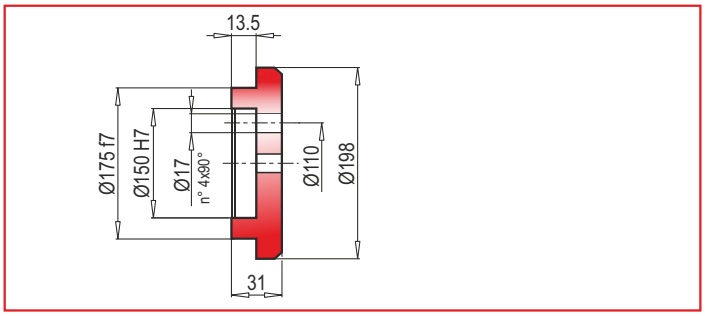

FL
Flanş / Flange / Flansch
Flangia / Bride / Brida

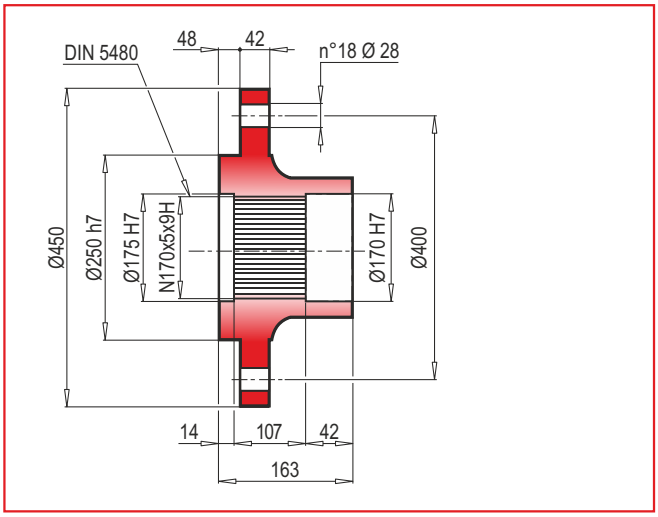

GA
Konik sıktırma / Shrink disc / Schrumpfscheibe
Giunto di attrito / Frette de serrage / Disco de contracción

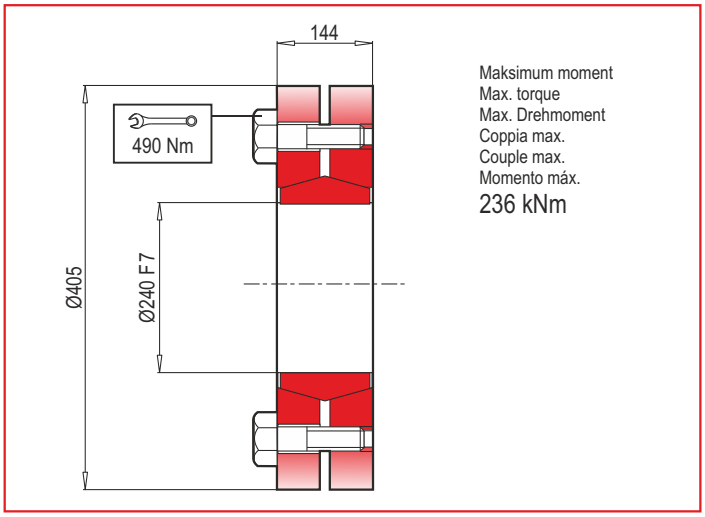

TR RADYAL YÜKLER (Fr)

Aşağıdaki grafikler istenilen n_2xh değerinin elde edilmesi için gerekli olan radyal yükleri ve K faktörlerini göstermektedir.

EN RADIAL LOADS (Fr)

The following curves show the radial loads and the K factors to obtain the required n2xh value.

DE RADIALLAST (Fr)

In den nachstehenden Diagrammen ist die Radiallast un der Koeffizient K dargestellt und kann mit dem gewünschten Wert n_2xh verglichen werden.

IT CARICHI RADIALI (Fr)

Nei diagrammi seguenti sono riportati i carichi radiali e i coefficienti K per rapportarli al valore n_2xh desiderato.

FR CHARGES RADIALES (Fr)

Dans les diagrammes suivants sont indiqués les charges radiales et les facteurs K de façon à obtenir la valeur n_2xh désirée.

ES CARGAS RADIALES (Fr)

En los siguientes diagramas se indican las cargas radiales y los coefici - entes K para obtener el valor requerido n_2xh.

M

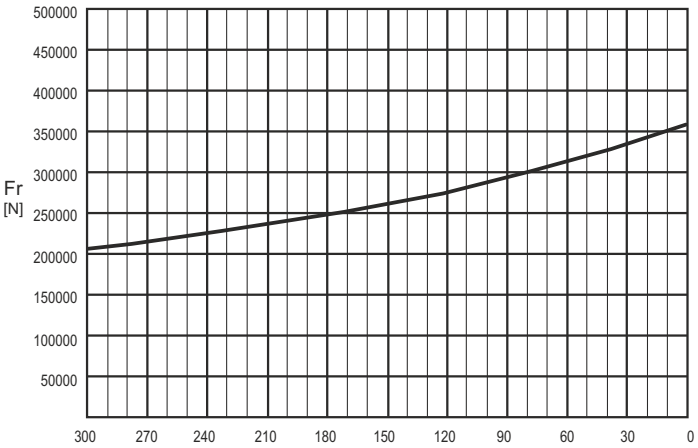

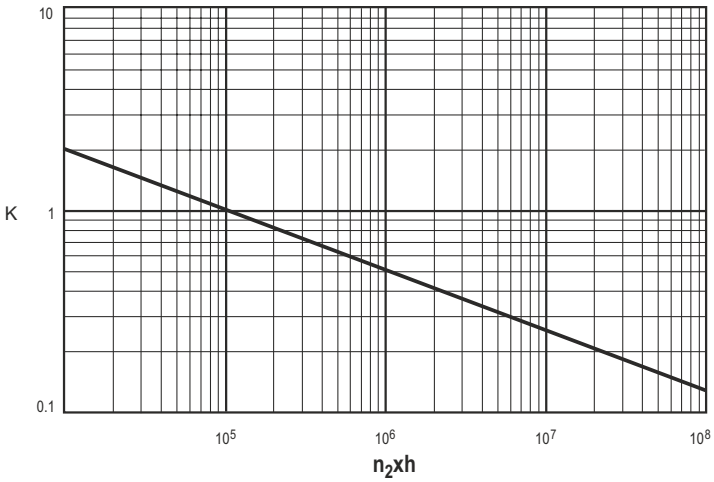

	n_2xh				
	10^5	10^4	10^6	10^7	10^8
M	Fr	Fr • K			

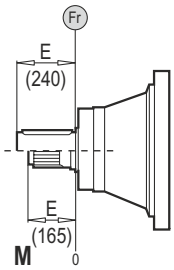

TR EKSENEL YÜKLER (Fa)

Tabloda yer alan eksenel yük değerleri, çıkış tipine ve uygulamanın yük yönüne göre değişir.

EN AXIAL LOADS (Fa)

The values of the axial loads in the table refer to the output versions and load direction of application.

DE AXIALLAST (Fa)

Die dargestellten Werte der Axiallast basieren auf der Version und der applizierten Lastrichtung.

IT CARICHI ASSIALI (Fa)

I valori dei carichi assiali indicati in tabella sono riferiti alle versioni e alla direzione di applicazione del carico.

FR CHARGES AXIALES (Fa)

Les valeurs des charges axiales indiquées dans le tableau se réfèrent aux versions et à la direction d'application de lacharge.

ES CARGAS AXIALES (Fa)

Los valores de las cargas axiales indicados en la tabla se refieren a las versiones y a la dirección de aplicación de la carga.

Fa [N]	M	
	75000	←
	65250	→

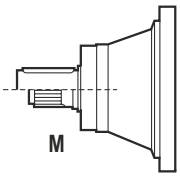

TEKNİK VERİLER / TECHNICAL DATA / TECHNISCHE DATEN / DATI TECNICI / DONNÉES TECHNIQUES / DATOS TÉCNICAS

	i_{ges}	Mmax (n_2 x h: 20000) (Nm)
220001	3.68 ... 4.94	413000
220002	14.08 ... 29.64	341100
220003	56.32 ... 200.07	341100
220004	249.42 ... 1450.51	314000
220005	1486.55 ... 8122.84	341100

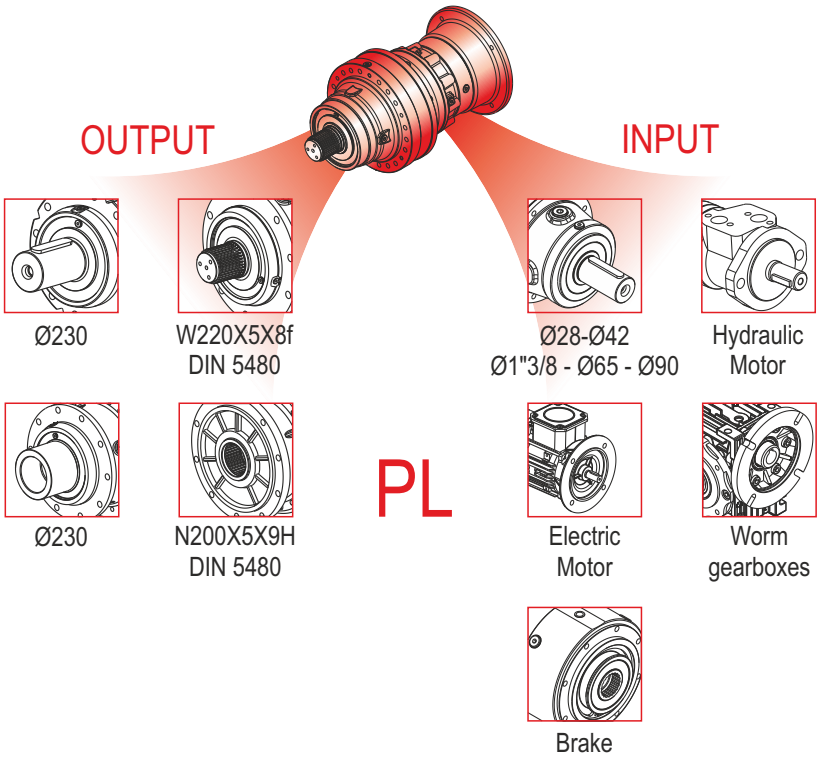

	i_{ges}	Mmax (n_2 x h: 20000) (Nm)
220003	60.00 ... 138.32	167900
220004	232.21 ... 933.66	314000
220005	1120.11 ... 7897.21	314000

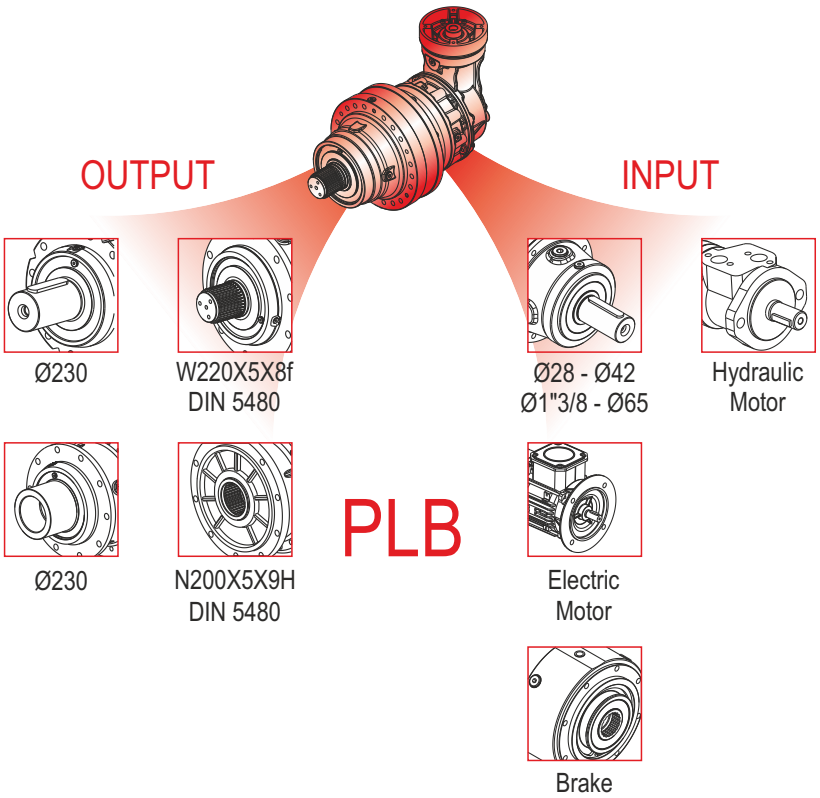

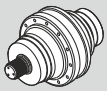	Pt [kW]	n_{1max} [min^{-1}]	i_{ges}	Mc [kNm]				Giriş- Input - Antrieb - Entrata - Entrée - Entrada		
				n_2 x h	n_2 x h	n_2 x h	n_2 x h			
				10.000	20.000	50.000	100.000	IEC (B5)	PMRV / PRV	EL - EML EM - EP - ET
PL 220001	133	200	3.68 4.94	284.9 205.1	243.0 184.7	184.6 160.8	149.9 144.8	160 | 200 | 250 180 | 225 | 280	-	-
PL 220002	72	1200	14.08 19.54 25.01 29.64	226.6 205.1 185.5 148.0	200.6 184.7 164.2 131.0	170.7 160.8 139.7 111.5	149.9 144.8 123.7 98.6	160 | 225 180 | 250 200 | 280	-	ET 90
PL 220003	52	2000	56.32 73.22 83.72 98.28 107.18 118.13 140.05 165.98 200.07	226.6 226.6 197.0 205.1 185.5 205.1 184.7 148.0 148.0	200.6 200.6 174.3 184.7 164.2 184.7 163.5 131.0 131.0	170.7 170.7 148.4 160.8 139.7 160.8 139.1 111.5 111.5	149.9 149.9 131.4 144.8 123.7 144.8 123.2 98.6 98.6	160 180 200 225 250	110 130 150	EM 65 EM 1"3/8 Z6 EP 65 ET 90
PL 220004	40	2800	249.42 334.82 389.71 433.14 491.42 529.07 570.05 625.97 685.16 723.59 793.14 826.91 920.96 1015.36 1200.42 1450.51	186.9 205.1 175.8 205.1 205.1 184.7 205.1 144.9 205.1 184.7 131.7 205.1 148.0 161.4 148.0 148.0	165.4 184.7 155.7 184.7 184.7 163.5 184.7 128.2 184.7 163.5 116.5 183.0 131.0 142.8 131.0 131.0	140.7 160.8 132.5 160.8 160.8 139.1 160.8 109.1 160.8 139.1 99.0 155.9 111.5 121.5 111.5 111.5	124.6 144.8 117.2 144.8 144.8 123.2 144.8 96.7 144.8 123.2 87.9 137.8 98.6 107.8 98.6 98.6	160 180 200 225	050 063 075 090 110 130 150	EL C 28 EL C 42 EML 42 EML 1"3/8 Z6 EM 65 EM 1"3/8 Z6 EP 65
PL 220005	32	2800	1486.55 1559.32 1675.25 1729.88 1795.45 1856.49 1945.45 2008.89 2105.40 2196.48 2268.10 2314.39 2427.41 2475.87 2539.02 2654.08 3155.64 4132.86 5995.12 6853.65 8122.84	205.1 205.1 226.6 205.1 205.1 205.1 226.6 205.1 175.8 203.8 205.1 150.7 205.1 185.5 205.1 203.8 205.1 205.1 205.1 161.4 148.0	184.7 184.7 200.6 184.7 184.7 184.7 200.6 184.7 155.7 180.3 184.7 133.4 184.7 164.2 184.7 180.3 184.7 184.7 183.0 142.8 131.0	160.8 157.6 170.7 160.8 160.8 160.8 170.7 160.8 132.5 153.5 157.6 113.5 159.1 139.7 160.8 153.5 160.8 160.8 155.9 121.5 111.5	144.8 139.5 149.9 144.8 144.8 144.8 149.9 144.8 117.2 135.9 139.5 100.5 140.8 123.7 144.8 135.9 144.8 144.8 137.8 107.8 98.6	63 71 80 90 100 112 132 160 180	050 063 075 090	EL C 28 EL C 42 EML 42 EML 1"3/8 Z6

	Pt [kW]	n_{1max} [min^{-1}]	i_{ges}	Mc [kNm]				Giriş- Input - Antrieb - Entrata - Entrée - Entrada	
				n_2 x h	n_2 x h	n_2 x h	n_2 x h		
				10.000	20.000	50.000	100.000	IEC (B5)	EL - EML EM - EP - ET
PLB 220003	48	2500	60.00 76.81 91.04 103.04 116.71 138.32	90.7 107.8 121.5 83.2 93.2 108.8	73.7 87.6 98.7 73.2 79.9 90.0	56.0 66.6 75.0 55.6 60.7 68.3	45.5 54.1 60.9 45.2 49.3 55.5	160 180 200 225	EM 65 EM 1"3/8 Z6 EP 65
PLB 220004	40	2500	232.21 341.67 390.71 458.66 551.28 592.80 653.56 774.59 933.66	205.1 208.8 197.0 205.1 205.1 148.0 184.7 148.0 148.0	184.7 169.5 174.3 184.7 184.7 131.0 163.5 131.0 131.0	144.4 128.7 141.4 158.1 160.8 111.5 139.1 111.5 111.5	117.4 104.4 114.8 128.4 144.8 98.6 123.2 98.6 98.6	160 180 200 225	EM 65 EM 1"3/8 Z6 EP 65
PLB 220005	31	2800	1120.11 1264.64 1398.76 1496.32 1527.32 1697.64 1756.74 1827.71 1969.26 2204.48 2267.53 2358.23 2499.66 2675.52 3103.61 3501.23 4502.08 5528.05 7897.21	225.3 203.8 185.5 205.1 185.5 205.1 149.6 184.7 205.1 182.1 150.7 193.0 184.7 205.1 205.1 165.4 205.1 161.4 148.0	183.1 180.3 164.2 184.7 164.2 184.7 139.5 163.5 184.7 164.2 133.4 180.0 163.5 184.7 184.7 146.6 183.0 142.8 131.0	139.1 151.5 139.7 160.8 139.7 160.8 123.9 139.1 160.8 139.7 113.5 152.3 139.1 160.8 160.8 124.6 155.9 121.5 111.5	113.0 123.0 123.7 138.4 123.7 144.8 100.6 123.2 144.8 117.8 100.5 123.5 123.2 134.9 144.8 110.6 137.8 107.8 98.6	80 90 100 112 132 160 180	EL C 28 EL C 42 EML 42 EML 1"3/8 Z6 EM 65 EM 1"3/8 Z6 EP 65

⚠ (n_2 x h = 20.000)

$$M_{max} = M_C \times 1.7$$

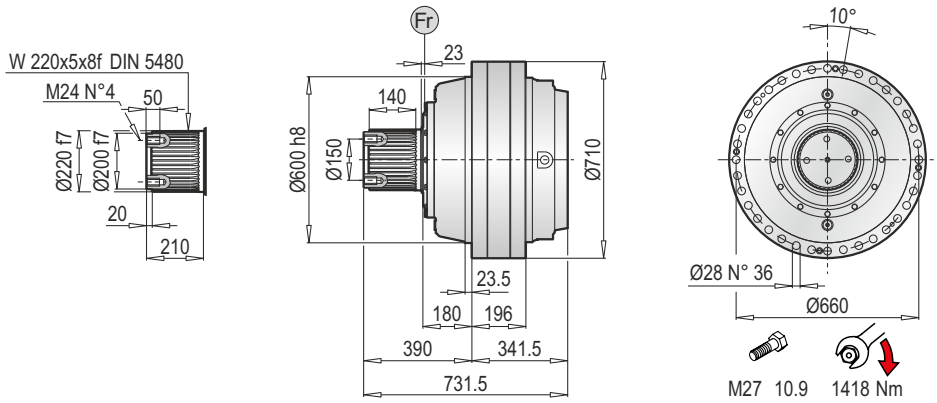

Aksesuarlar
Accessories
Zubehör
Accessori
Accessoires
Accesorios

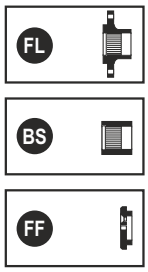

PL 220000 MS - Elektrik Motor Adaptörleri (IEC) / Electrıc Motor Couplings (IEC) / Anbauvorrichtung Für Elektromotore (IEC) / Predisposizioni Per Motori Elettrici (IEC) / Adaptations Pour Moteurs Electriques (IEC) / Acoplamientos Para Motores Eléctricos (IEC)

PL	IEC 63			IEC 71			IEC 80			IEC 90			IEC 100			IEC 112			IEC 132		
	LT	Z	ØD	LT	Z	ØD	LT	Z	ØD	LT	Z	ØD	LT	Z	ØD	LT	Z	ØD	LT	Z	ØD
220001	-			-			-			-			-			-			-		
220002	-			-			-			-			-			-			-		
220003	-			-			-			-			-			-			-		
220004	-			-			-			-			-			-			-		
220005	838	36	140	838	36	160	858	56	200	858	56	200	868	66	250	868	66	250	902	100	300

PL	IEC 160			IEC 180			IEC 200			IEC 225			IEC 250			IEC 280		
	LT	Z	ØD	LT	Z	ØD	LT	Z	ØD	LT	Z	ØD	LT	Z	ØD	LT	Z	ØD
220001	491.5	150	350	491.5	150	350	491.5	150	400	480.5	139	450	480.5	139	550	480.5	139	550
220002	712.5			712.5			712.5			701.5			701.5			701.5		
220003	819.5	118		819.5	118		819.5			808.5			808.5			-		
220004	859	139		859	139		889	148		880			-			-		
220005	941			941			-			-			-			-		

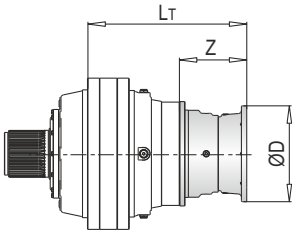

PL	IEC ~ Kg												
	63	71	80	90	100	112	132	160	180	200	225	250	280
220001	-	-	-	-	-	-	-	980	980	985	991	1003	1015
220002	-	-	-	-	-	-	-	1174	1174	1179	1185	1197	1209
220003	-	-	-	-	-	-	-	1234	1234	1239	1245	1257	-
220004	-	-	-	-	-	-	-	1227	1227	1237	1242	-	-
220005	1218	1218	1220	1220	1221	1221	1225	1235	1235	-	-	-	-

PL 220000 MS - Giriş Milleri / Input Shafts / Antriebswellen / Alberi Entrata / Arbres D'entree / Ejes De Entrada

PL	EL C 28				EL C 42				EML 42				EML 1"3/8 Z6				EM 65				EM 1"3/8 Z6			
	LT	Z	L	Ød	LT	Z	L	Ød	LT	Z	L	Ød	LT	Z	L	Ød	LT	Z	L	Ød	LT	Z	L	Ød
220002	-				-				-				-				-				-			
220003	-				-				-				-				791	121.5	105	65	791	121.5	105	1"3/8
220004	805	64	50	28	805	64	82	42	835	94	82	42	835	94	106	1"3/8	862.5				862.5			
220005	866				866				896				896				-				-			

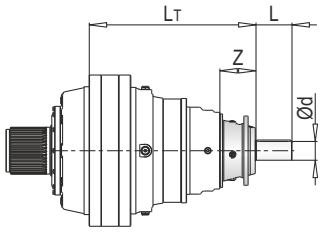

PL	EP 65				ET 90			
	LT	Z	L	Ød	LT	Z	L	Ød
220002	-				734	171.5	170	90
220003	822.5	153	105	65	841			
220004	894				-			
220005	-				-			

PL	~ Kg							
	EL C 28	EL C 42	EML 42	EML 1"3/8 Z6	EM 65	EM 1"3/8 Z6	EP 65	ET 90
220002	-	-	-	-	-	-	-	983
220003	-	-	-	-	1206	1206	1215	1177
220004	1210.5	1211	1214	1214	1222	1222	1231	-
220005	1218.5	1219	1222	1222	-	-	-	-

PL 220000 MS - Sonsuz Dişlili Redüktör Adaptörleri (PMRV/PRV) / Worm Gearbox Adaptors (PMRV/PRV) / Anschluss Für Schneckengetriebe (PMRV/PRV) / Predisposizioni Per Riduttori A Vite Senza Fine (PMRV/PRV) / Adaptation Pour Reducteurs A Vis Sans Fin (PMRV/PRV) / Acoplamiento Para Reductores De Tornillo Sin Fin (PMRV/PRV)

PL	PMRV/PRV 050					PMRV/PRV 063					PMRV/PRV 075				
	LM	l	h	MA	G	LM	l	h	MA	G	LM	l	h	MA	G
220003	-					-					-				
220004	862.5	50	110	60	80	872	63	113	72	95	851	75	161	86	112.5
220005	923.5					933					912				

PL	PMRV/PRV 090					PMRV/PRV 110					PMRV/PRV 130				
	LM	l	h	MA	G	LM	l	h	MA	G	LM	l	h	MA	G
220003	-					803.5	110	237.5	127.5	160	809	130	277.5	147.5	180
220004	1003.5	90	193	103	129.5	875					880.5				
220005	1063					-					-				

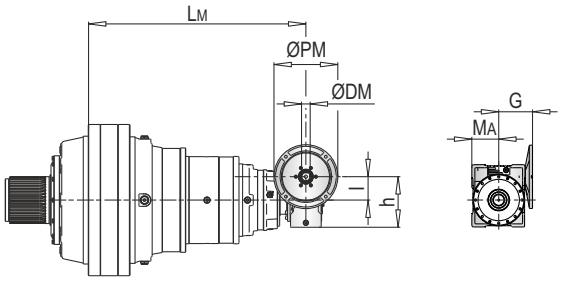

PL	PMRV/PRV 150				
	LM	l	h	MA	G
220003	825.5	150	320	170	210
220004	897				
220005	-				

PL	PMRV/PRV ~ Kg						
	050	063	075	090	110	130	150
220003	-	-	-	-	1235	1252	1288
220004	1213	1216.5	1219	1224	1251	1268	1304
220005	1221	1224.5	1227	1231	-	-	-

ØPM
ØDM
105

PLB 220000 MS - Elektrik Motor Adaptörleri (IEC) / Electric Motor Couplings (IEC) / Anbauvorrichtung Für Elektromotore (IEC) / Predisposizioni Per Motori Elettrici (IEC) / Adaptations Pour Moteurs Electriques (IEC) / Acoplamientos Para Motores Eléctricos (IEC)

PLB	IEC 80				IEC 90				IEC 100				IEC 112				IEC 132			
	A	LT	Z	ØD	A	LT	Z	ØD	A	LT	Z	ØD	A	LT	Z	ØD	A	LT	Z	ØD
220003	-				-				-				-				-			
220004	-				-				-				-				-			
220005	917.5	296	56	200	917.5	296	56	200	917.5	306	66	250	917.5	306	66	250	917.5	340	100	300

PLB	IEC 160				IEC 180				IEC 200				IEC 225			
	A	LT	Z	ØD	A	LT	Z	ØD	A	LT	Z	ØD	A	LT	Z	ØD
220003	818.5	433	118	350	818.5	433	118	350	818.5	463	148	400	818.5	454	139	450
220004	832.5				832.5				832.5				832.5			
220005	917.5	379	139		917.5	379	139						-			

PLB	IEC ~ Kg								
	80	90	100	112	132	160	180	200	225
220003	-	-	-	-	-	1233	1233	1243	1248
220004	-	-	-	-	-	1293	1293	1303	1308
220005	1258	1258	1259	1259	1263	1273	1273	-	-

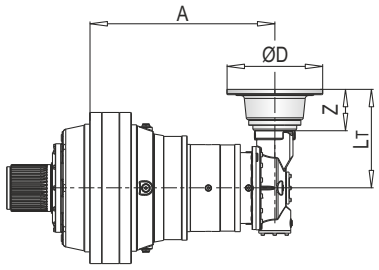

103

PLB 220000 MS - Giriş Milleri / Input Shafts / Antriebswellen / Alberi Entrata / Arbres D'entree / Ejes De Entrada

PLB	EL C 28					EL C 42					EML 42					EML 1"3/8 Z6					EM 65				
	A	LT	Z	L	Ød	A	LT	Z	L	Ød	A	LT	Z	L	Ød	A	LT	Z	L	Ød	A	LT	Z	L	Ød
220003	-					-					-					-					818.5	436.5	121.5	105	65
220004	-					-					-					-					832.5				
220005	917.5	304	64	50	28	917.5	304	64	82	42	917.5	334	94	82	42	917.5	334	94	106	1"3/8	917.5	361.5			

PLB	EM 1"3/8 Z6					EP 65				
	A	LT	Z	L	Ød	A	LT	Z	L	Ød
220003	818.5	436.5	121.5	105	1"3/8	818.5	468	153	105	65
220004	832.5					832.5				
220005	917.5	361.5				917.5	393			

PLB	~ Kg						
	EL C 28	EL C 42	EML 42	EML 1"3/8 Z6	EM 65	EM 1"3/8 Z6	EP 65
220003	-	-	-	-	1228	1228	1237
220004	-	-	-	-	1288	1288	1297
220005	1256.5	1257	1260	1260	1268	1268	1277

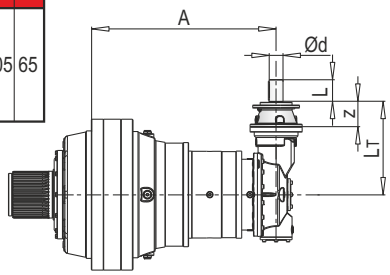

Ød
88-90

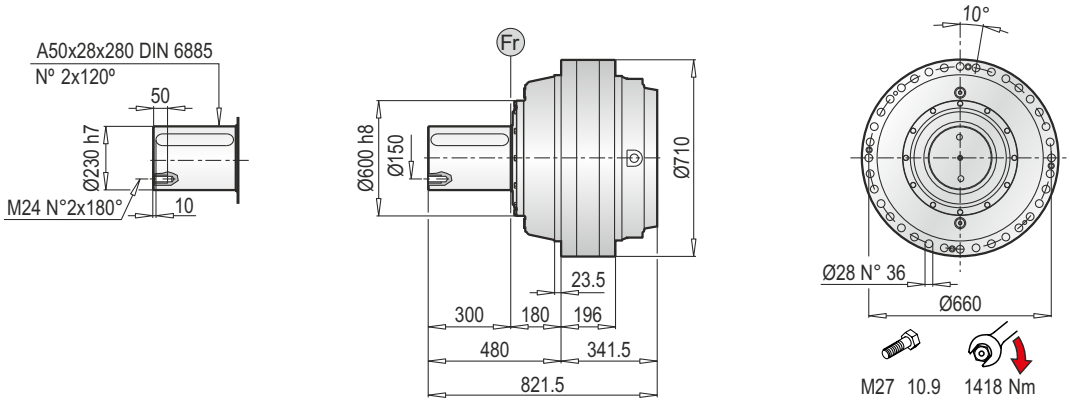

PL 220000 MC - Elektrik Motor Adaptörleri (IEC) / Electrıc Motor Couplings (IEC) / Anbauvorrichtung Für Elektromotore (IEC) / Predisposizioni Per Motori Elettrici (IEC) / Adaptations Pour Moteurs Electriques (IEC) / Acoplamientos Para Motores Eléctricos (IEC)

PL	IEC 63			IEC 71			IEC 80			IEC 90			IEC 100			IEC 112			IEC 132		
	LT	Z	ØD	LT	Z	ØD	LT	Z	ØD	LT	Z	ØD	LT	Z	ØD	LT	Z	ØD	LT	Z	ØD
220001	-			-			-			-			-			-			-		
220002	-			-			-			-			-			-			-		
220003	-			-			-			-			-			-			-		
220004	-			-			-			-			-			-			-		
220005	838	36	140	838	36	160	858	56	200	858	56	200	868	66	250	868	66	250	902	100	300

PL	IEC 160			IEC 180			IEC 200			IEC 225			IEC 250			IEC 280		
	LT	Z	ØD	LT	Z	ØD	LT	Z	ØD	LT	Z	ØD	LT	Z	ØD	LT	Z	ØD
220001	491.5	150	350	491.5	150	350	491.5	150	400	480.5	139	450	480.5	139	550	480.5	139	550
220002	712.5			712.5			712.5			701.5			701.5			701.5		
220003	819.5	118		819.5	118		819.5			808.5			808.5			-		
220004	859	139		859	139		889	148		880			-			-		
220005	941			941			-			-			-			-		

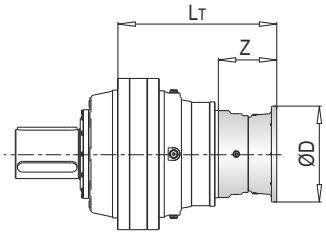

PL	IEC ~ Kg												
	63	71	80	90	100	112	132	160	180	200	225	250	280
220001	-	-	-	-	-	-	-	980	980	985	991	1003	1015
220002	-	-	-	-	-	-	-	1174	1174	1179	1185	1197	1209
220003	-	-	-	-	-	-	-	1234	1234	1239	1245	1257	-
220004	-	-	-	-	-	-	-	1227	1227	1237	1242	-	-
220005	1218	1218	1220	1220	1221	1221	1225	1235	1235	-	-	-	-

PL 220000 MC - Giriş Milleri / Input Shafts / Antriebswellen / Alberi Entrata / Arbres D'entree / Ejes De Entrada

PL	EL C 28				EL C 42				EML 42				EML 1"3/8 Z6				EM 65				EM 1"3/8 Z6			
	LT	Z	L	Ød	LT	Z	L	Ød	LT	Z	L	Ød	LT	Z	L	Ød	LT	Z	L	Ød	LT	Z	L	Ød
220002	-				-				-				-				-				-			
220003	-				-				-				-				791	121.5	105	65	791	121.5	105	1"3/8
220004	805	64	50	28	805	64	82	42	835	94	82	42	835	94	106	1"3/8	862.5				862.5			
220005	866				866				896				896				-				-			

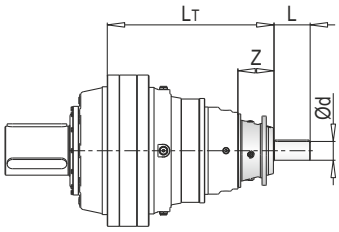

PL	EP 65				ET 90			
	LT	Z	L	Ød	LT	Z	L	Ød
220002	-				734	171.5	170	90
220003	822.5	153	105	65	841			
220004	894				-			
220005	-				-			

PL	~ Kg							
	EL C 28	EL C 42	EML 42	EML 1"3/8 Z6	EM 65	EM 1"3/8 Z6	EP 65	ET 90
220002	-	-	-	-	-	-	-	983
220003	-	-	-	-	1206	1206	1215	1177
220004	1210.5	1211	1214	1214	1222	1222	1231	-
220005	1218.5	1219	1222	1222	-	-	-	-

PL 220000 MC - Sonsuz Dişlili Redüktör Adaptörleri (PMRV/PRV) / Worm Gearbox Adaptors (PMRV/PRV) / Anschluss Für Schneckengetriebe (PMRV/PRV) / Predisposizioni Per Riduttori A Vite Senza Fine (PMRV/PRV) / Adaptation Pour Reducteurs A Vis Sans Fin (PMRV/PRV) / Acoplamiento Para Reductores De Tornillo Sin Fin (PMRV/PRV)

PL	PMRV/PRV 050					PMRV/PRV 063					PMRV/PRV 075				
	LM	l	h	MA	G	LM	l	h	MA	G	LM	l	h	MA	G
220003	-					-					-				
220004	862.5	50	110	60	80	872	63	113	72	95	851	75	161	86	112.5
220005	923.5					933					912				

PL	PMRV/PRV 090					PMRV/PRV 110					PMRV/PRV 130				
	LM	l	h	MA	G	LM	l	h	MA	G	LM	l	h	MA	G
220003	-					803.5	110	237.5	127.5	160	809	130	277.5	147.5	180
220004	1003.5	90	193	103	129.5	875					880.5				
220005	1063					-					-				

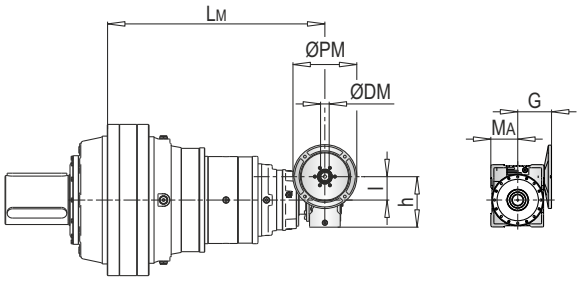

PL	PMRV/PRV 150				
	LM	l	h	MA	G
220003	825.5	150	320	170	210
220004	897				
220005	-				

PL	PMRV/PRV ~ Kg						
	050	063	075	090	110	130	150
220003	-	-	-	-	1235	1252	1288
220004	1213	1216.5	1219	1224	1251	1268	1304
220005	1221	1224.5	1227	1231	-	-	-

ØPM
ØDM
105

PLB 220000 MC - Elektrik Motor Adaptörleri (IEC) / Electric Motor Couplings (IEC) / Anbauvorrichtung Für Elektromotore (IEC) / Predisposizioni Per Motori Elettrici (IEC) / Adaptations Pour Moteurs Electriques (IEC) / Acoplamientos Para Motores Eléctricos (IEC)

PLB	IEC 80				IEC 90				IEC 100				IEC 112				IEC 132			
	A	LT	Z	ØD	A	LT	Z	ØD	A	LT	Z	ØD	A	LT	Z	ØD	A	LT	Z	ØD
220003	-				-				-				-				-			
220004	-				-				-				-				-			
220005	917.5	296	56	200	917.5	296	56	200	917.5	306	66	250	917.5	306	66	250	917.5	340	100	300

PLB	IEC 160				IEC 180				IEC 200				IEC 225			
	A	LT	Z	ØD	A	LT	Z	ØD	A	LT	Z	ØD	A	LT	Z	ØD
220003	818.5	433	118	350	818.5	433	118	350	818.5	463	148	400	818.5	454	139	450
220004	832.5				832.5				832.5				832.5			
220005	917.5	379	139		917.5	379	139		-				-			

PLB	IEC ~ Kg								
	80	90	100	112	132	160	180	200	225
220003	-	-	-	-	-	1233	1233	1243	1248
220004	-	-	-	-	-	1293	1293	1303	1308
220005	1258	1258	1259	1259	1263	1273	1273	-	-

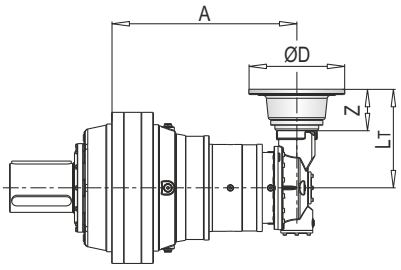

103

PLB 220000 MC - Giriş Milleri / Input Shafts / Antriebswellen / Alberi Entrata / Arbres D'entree / Ejes De Entrada

PLB	EL C 28					EL C 42					EML 42					EML 1"3/8 Z6					EM 65				
	A	LT	Z	L	Ød	A	LT	Z	L	Ød	A	LT	Z	L	Ød	A	LT	Z	L	Ød	A	LT	Z	L	Ød
220003	-					-					-					-					818.5	436.5	121.5	105	65
220004	-					-					-					-					832.5				
220005	917.5	304	64	50	28	917.5	304	64	82	42	917.5	334	94	82	42	917.5	334	94	106	1"3/8	917.5	361.5			

PLB	EM 1"3/8 Z6					EP 65				
	A	LT	Z	L	Ød	A	LT	Z	L	Ød
220003	818.5	436.5	121.5	105	1"3/8	818.5	468	153	105	65
220004	832.5					832.5				
220005	917.5	361.5				917.5	393			

PLB	~ Kg						
	EL C 28	EL C 42	EML 42	EML 1"3/8 Z6	EM 65	EM 1"3/8 Z6	EP 65
220003	-	-	-	-	1228	1228	1237
220004	-	-	-	-	1288	1288	1297
220005	1256.5	1257	1260	1260	1268	1268	1277

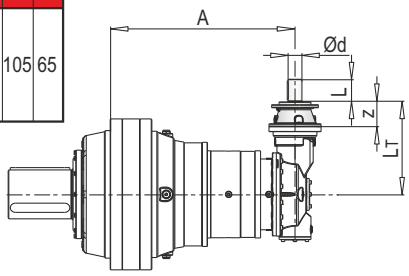

Ød
88-90

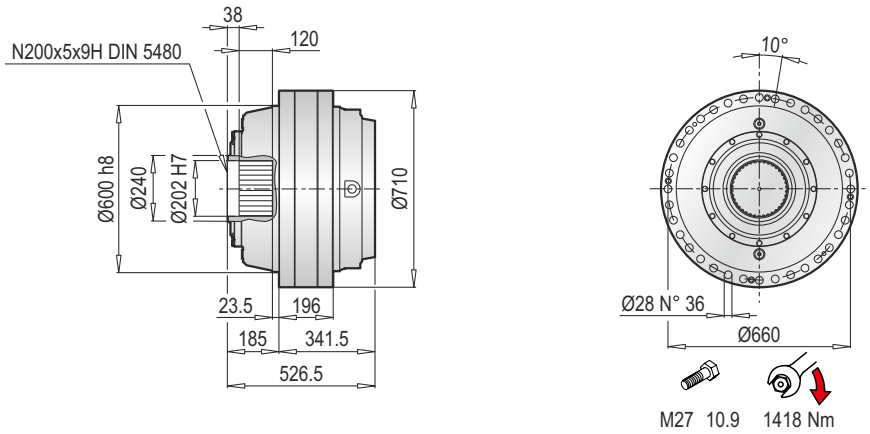

PL 220000 F - Elektrik Motor Adaptörleri (IEC) / Electric Motor Couplings (IEC) /Anbauvorrichtung Für Elektromotore (IEC) / Predisposizioni Per Motori Elettrici (IEC) / Adaptations Pour Moteurs Electriques (IEC) /Acoplamientos Para Motores Eléctricos (IEC)

PL	IEC 63			IEC 71			IEC 80			IEC 90			IEC 100			IEC 112			IEC 132		
	LT	Z	ØD	LT	Z	ØD	LT	Z	ØD	LT	Z	ØD	LT	Z	ØD	LT	Z	ØD	LT	Z	ØD
220001	-			-			-			-			-			-			-		
220002	-			-			-			-			-			-			-		
220003	-			-			-			-			-			-			-		
220004	-			-			-			-			-			-			-		
220005	838	36	140	838	36	160	858	56	200	858	56	200	868	66	250	868	66	250	902	100	300

PL	IEC 160			IEC 180			IEC 200			IEC 225			IEC 250			IEC 280		
	LT	Z	ØD	LT	Z	ØD	LT	Z	ØD	LT	Z	ØD	LT	Z	ØD	LT	Z	ØD
220001	491.5	150	350	491.5	150	350	491.5	150	400	480.5	139	450	480.5	139	550	480.5	139	550
220002	712.5			712.5			712.5			701.5			701.5			701.5		
220003	819.5	118		819.5	118		819.5			808.5			808.5			-		
220004	859	139		859	139		889	148		880			-			-		
220005	941			941			-			-			-			-		

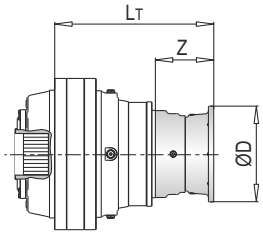

PL	IEC ~ Kg												
	63	71	80	90	100	112	132	160	180	200	225	250	280
220001	-	-	-	-	-	-	-	930	930	935	941	953	965
220002	-	-	-	-	-	-	-	1124	1124	1129	1135	1147	1159
220003	-	-	-	-	-	-	-	1184	1184	1189	1195	1207	-
220004	-	-	-	-	-	-	-	1177	1177	1187	1192	-	-
220005	1168	1168	1170	1170	1171	1171	1175	1185	1185	-	-	-	-

PL 220000 F - Giriş Milleri / Input Shafts / Antriebswellen / Alberi Entrata / Arbres D'entree / Ejes De Entrada

PL	EL C 28				EL C 42				EML 42				EML 1"3/8 Z6				EM 65				EM 1"3/8 Z6			
	LT	Z	L	Ød	LT	Z	L	Ød	LT	Z	L	Ød	LT	Z	L	Ød	LT	Z	L	Ød	LT	Z	L	Ød
220002	-				-				-				-				-				-			
220003	-				-				-				-				791	121.5	105	65	791	121.5	105	1"3/8
220004	805	64	50	28	805	64	82	42	835	94	82	42	835	94	106	1"3/8	862.5				862.5			
220005	866				866				896				896				-				-			

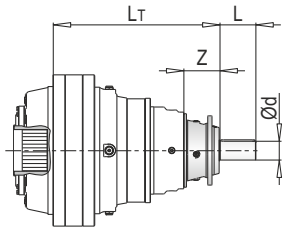

PL	EP 65				ET 90			
	LT	Z	L	Ød	LT	Z	L	Ød
220002	-				734	171.5	170	90
220003	822.5	153	105	65	841			
220004	894				-			
220005	-				-			

PL	~ Kg							
	EL C 28	EL C 42	EML 42	EML 1"3/8 Z6	EM 65	EM 1"3/8 Z6	EP 65	ET 90
220002	-	-	-	-	-	-	-	933
220003	-	-	-	-	1156	1156	1165	1127
220004	1160.5	1161	1164	1164	1172	1172	1181	-
220005	1168.5	1169	1172	1172	-	-	-	-

PL 220000 F - Sonsuz Dişlili Redüktör Adaptörleri (PMRV/PRV) / Worm Gearbox Adaptors (PMRV/PRV) / Anschluss Für Schneckengetriebe (PMRV/PRV) / Predisposizioni Per Riduttori A Vite Senza Fine (PMRV/PRV) / Adaptation Pour Reducteurs A Vis Sans Fin (PMRV/PRV) / Acoplamiento Para Reductores De Tornillo Sin Fin (PMRV/PRV)

PL	PMRV/PRV 050					PMRV/PRV 063					PMRV/PRV 075				
	LM	l	h	MA	G	LM	l	h	MA	G	LM	l	h	MA	G
220003	-					-					-				
220004	862.5	50	110	60	80	872	63	113	72	95	851	75	161	86	112.5
220005	923.5					933					912				

PL	PMRV/PRV 090					PMRV/PRV 110					PMRV/PRV 130				
	LM	l	h	MA	G	LM	l	h	MA	G	LM	l	h	MA	G
220003	-					803.5	110	237.5	127.5	160	809	130	277.5	147.5	180
220004	1003.5	90	193	103	129.5	875					880.5				
220005	1063					-					-				

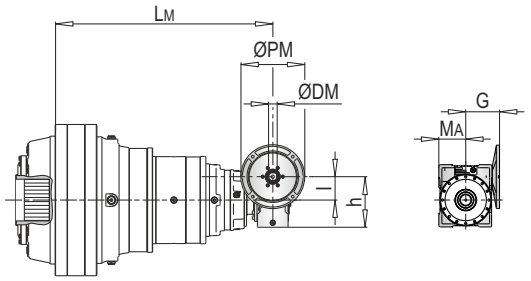

PL	PMRV/PRV 150				
	LM	l	h	MA	G
220003	825.5	150	320	170	210
220004	897				
220005	-				

PL	PMRV/PRV ~ Kg						
	050	063	075	090	110	130	150
220003	-	-	-	-	1185	1202	1238
220004	1163	1166.5	1169	1174	1201	1218	1254
220005	1171	1174.5	1177	1181	-	-	-

ØPM
ØDM
105

PLB 220000 F - Elektrik Motor Adaptörleri (IEC) / Electric Motor Couplings (IEC) / Anbauvorrichtung Für Elektromotore (IEC) / Predisposizioni Per Motori Elettrici (IEC) / Adaptations Pour Moteurs Electriques (IEC) / Acoplamientos Para Motores Eléctricos (IEC)

PLB	IEC 80				IEC 90				IEC 100				IEC 112				IEC 132			
	A	LT	Z	ØD	A	LT	Z	ØD	A	LT	Z	ØD	A	LT	Z	ØD	A	LT	Z	ØD
220003	-				-				-				-				-			
220004	-				-				-				-				-			
220005	917.5	296	56	200	917.5	296	56	200	917.5	306	66	250	917.5	306	66	250	917.5	340	100	300

PLB	IEC 160				IEC 180				IEC 200				IEC 225			
	A	LT	Z	ØD	A	LT	Z	ØD	A	LT	Z	ØD	A	LT	Z	ØD
220003	818.5	433	118	350	818.5	433	118	350	818.5	463	148	400	818.5	454	139	450
220004	832.5				832.5				832.5				832.5			
220005	917.5	379	139		917.5	379	139		-				-			

PLB	IEC ~ Kg								
	80	90	100	112	132	160	180	200	225
220003	-	-	-	-	-	1183	1183	1193	1198
220004	-	-	-	-	-	1243	1243	1253	1258
220005	1208	1208	1209	1209	1213	1223	1223	-	-

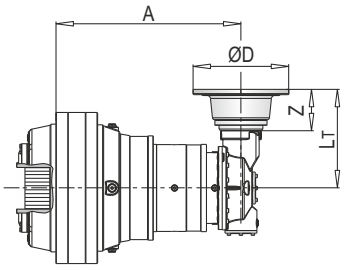

103

PLB 220000 F - Giriş Milleri / Input Shafts / Antriebswellen / Alberi Entrata / Arbres D'entree / Ejes De Entrada

PLB	EL C 28					EL C 42					EML 42					EML 1"3/8 Z6					EM 65				
	A	LT	Z	L	Ød	A	LT	Z	L	Ød	A	LT	Z	L	Ød	A	LT	Z	L	Ød	A	LT	Z	L	Ød
220003	-					-					-					-					818.5	436.5	121.5	105	65
220004	-					-					-					-					832.5				
220005	917.5	304	64	50	28	917.5	304	64	82	42	917.5	334	94	82	42	917.5	334	94	106	1"3/8	917.5	361.5			

PLB	EM 1"3/8 Z6					EP 65				
	A	LT	Z	L	Ød	A	LT	Z	L	Ød
220003	818.5	436.5	121.5	105	1"3/8	818.5	468	153	105	65
220004	832.5					832.5				
220005	917.5	361.5				917.5	393			

PLB	~ Kg						
	EL C 28	EL C 42	EML 42	EML 1"3/8 Z6	EM 65	EM 1"3/8 Z6	EP 65
220003	-	-	-	-	1178	1178	1187
220004	-	-	-	-	1238	1238	1247
220005	1206.5	1207	1210	1210	1218	1218	1227

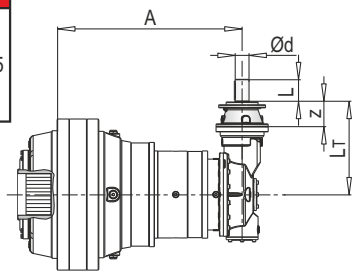

Ød
88-90

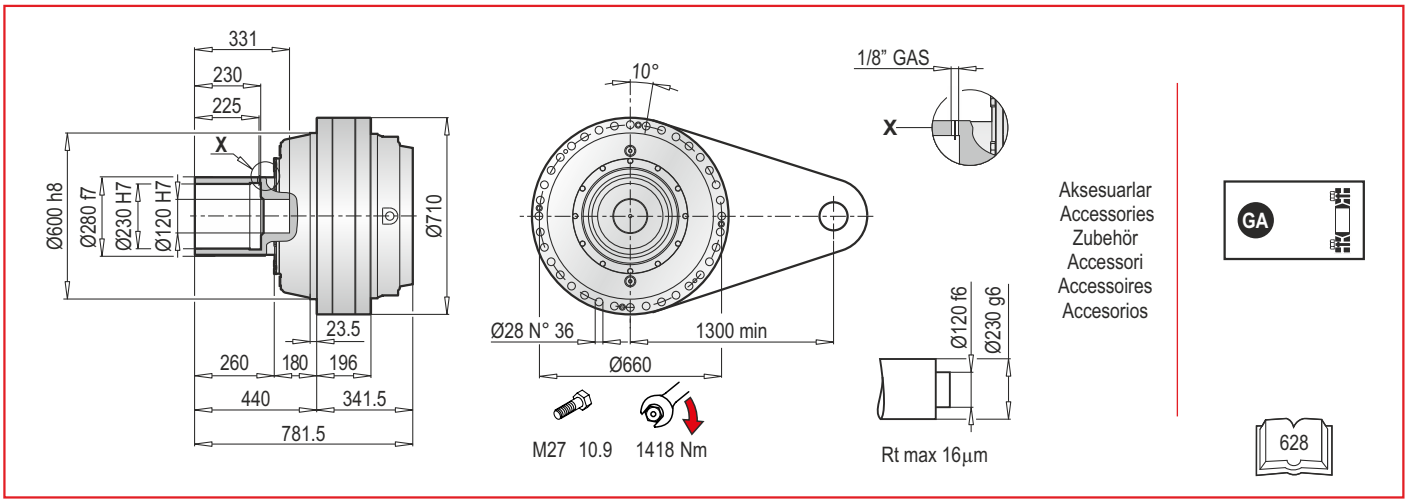

PL 220000 FS - Elektrik Motor Adaptörleri (IEC) / Electrıc Motor Couplings (IEC) / Anbauvorrichtung Für Elektromotore (IEC) / Predisposizioni Per Motori Elettrici (IEC) / Adaptations Pour Moteurs Electriques (IEC) / Acoplamientos Para Motores Eléctricos (IEC)

PL	IEC 63			IEC 71			IEC 80			IEC 90			IEC 100			IEC 112			IEC 132		
	LT	Z	ØD	LT	Z	ØD	LT	Z	ØD	LT	Z	ØD	LT	Z	ØD	LT	Z	ØD	LT	Z	ØD
220001	-			-			-			-			-			-			-		
220002	-			-			-			-			-			-			-		
220003	-			-			-			-			-			-			-		
220004	-			-			-			-			-			-			-		
220005	838	36	140	838	36	160	858	56	200	858	56	200	868	66	250	868	66	250	902	100	300

PL	IEC 160			IEC 180			IEC 200			IEC 225			IEC 250			IEC 280		
	LT	Z	ØD	LT	Z	ØD	LT	Z	ØD	LT	Z	ØD	LT	Z	ØD	LT	Z	ØD
220001	491.5	150	350	491.5	150	350	491.5	150	400	480.5	139	450	480.5	139	550	480.5	139	550
220002	712.5			712.5			712.5			701.5			701.5			701.5		
220003	819.5	118		819.5	118		819.5			808.5			808.5			-		
220004	859	139		859	139		889	148		880			-			-		
220005	941			941			-			-			-			-		

PL	IEC ~ Kg												
	63	71	80	90	100	112	132	160	180	200	225	250	280
220001	-	-	-	-	-	-	-	952	952	957	963	975	987
220002	-	-	-	-	-	-	-	1146	1146	1151	1157	1169	1181
220003	-	-	-	-	-	-	-	1206	1206	1211	1217	1229	-
220004	-	-	-	-	-	-	-	1199	1199	1209	1214	-	-
220005	1190	1190	1192	1192	1193	1193	1197	1207	1207	-	-	-	-

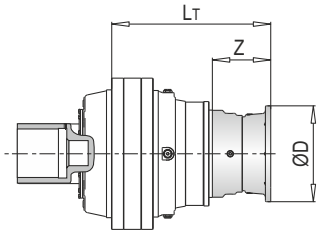

PL 220000 FS - Giriş Milleri / Input Shafts / Antriebswellen / Alberi Entrata / Arbres D'entree / Ejes De Entrada

PL	EL C 28				EL C 42				EML 42				EML 1"3/8 Z6				EM 65				EM 1"3/8 Z6			
	LT	Z	L	Ød	LT	Z	L	Ød	LT	Z	L	Ød	LT	Z	L	Ød	LT	Z	L	Ød	LT	Z	L	Ød
220002	-				-				-				-				-				-			
220003	-				-				-				-				791	121.5	105	65	791	121.5	105	1"3/8
220004	805	64	50	28	805	64	82	42	835	94	82	42	835	94	106	1"3/8	862.5				862.5			
220005	866				866				896				896				-				-			

PL	EP 65				ET 90			
	LT	Z	L	Ød	LT	Z	L	Ød
220002	-				734	171.5	170	90
220003	822.5	153	105	65	841			
220004	894				-			
220005	-				-			

PL	~ Kg							
	EL C 28	EL C 42	EML 42	EML 1"3/8 Z6	EM 65	EM 1"3/8 Z6	EP 65	ET 90
220002	-	-	-	-	-	-	-	955
220003	-	-	-	-	1178	1178	1187	1149
220004	1182.5	1183	1186	1186	1194	1194	1203	-
220005	1190.5	1191	1194	1194	-	-	-	-

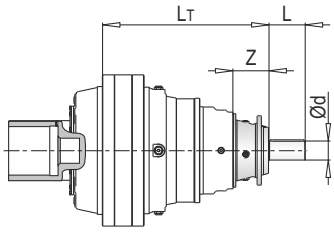

PL 220000 FS - Sonsuz Dişlili Redüktör Adaptörleri (PMRV/PRV) / Worm Gearbox Adaptors (PMRV/PRV) / Anschluss Für Schneckengetriebe (PMRV/PRV) / Predisposizioni Per Riduttori A Vite Senza Fine (PMRV/PRV) / Adaptation Pour Reducteurs A Vis Sans Fin (PMRV/PRV) / Acoplamiento Para Reductores De Tornillo Sin Fin (PMRV/PRV)

PL	PMRV/PRV 050					PMRV/PRV 063					PMRV/PRV 075				
	LM	l	h	MA	G	LM	l	h	MA	G	LM	l	h	MA	G
220003	-					-					-				
220004	862.5	50	110	60	80	872	63	113	72	95	851	75	161	86	112.5
220005	923.5					933					912				

PL	PMRV/PRV 090					PMRV/PRV 110					PMRV/PRV 130				
	LM	l	h	MA	G	LM	l	h	MA	G	LM	l	h	MA	G
220003	-					803.5	110	237.5	127.5	160	809	130	277.5	147.5	180
220004	1003.5	90	193	103	129.5	875					880.5				
220005	1063					-					-				

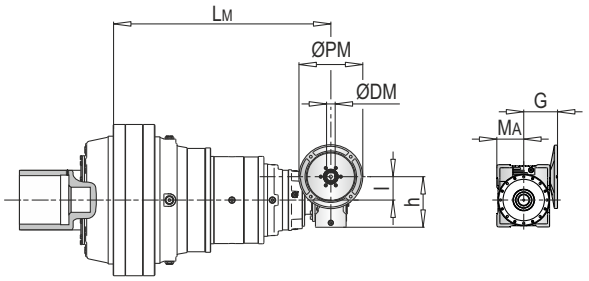

PL	PMRV/PRV 150				
	LM	l	h	MA	G
220003	825.5	150	320	170	210
220004	897				
220005	-				

PL	PMRV/PRV ~ Kg						
	050	063	075	090	110	130	150
220003	-	-	-	-	1207	1224	1260
220004	1185	1188.5	1191	1196	1223	1240	1276
220005	1193	1196.5	1199	1204	-	-	-

ØPM
ØDM
105

PLB 220000 FS - Elektrik Motor Adaptörleri (IEC) / Electric Motor Couplings (IEC) / Anbauvorrichtung Für Elektromotore (IEC) / Predisposizioni Per Motori Elettrici (IEC) / Adaptations Pour Moteurs Electriques (IEC) / Acoplamientos Para Motores Eléctricos (IEC)

PLB	IEC 80				IEC 90				IEC 100				IEC 112				IEC 132			
	A	LT	Z	ØD	A	LT	Z	ØD	A	LT	Z	ØD	A	LT	Z	ØD	A	LT	Z	ØD
220003	-				-				-				-				-			
220004	-				-				-				-				-			
220005	917.5	296	56	200	917.5	296	56	200	917.5	306	66	250	917.5	306	66	250	917.5	340	100	300

PLB	IEC 160				IEC 180				IEC 200				IEC 225			
	A	LT	Z	ØD	A	LT	Z	ØD	A	LT	Z	ØD	A	LT	Z	ØD
220003	818.5	433	118	350	818.5	433	118	350	818.5	463	148	400	818.5	454	139	450
220004	832.5				832.5				832.5				832.5			
220005	917.5	379	139		917.5	379	139		-				-			

PLB	IEC ~ Kg								
	80	90	100	112	132	160	180	200	225
220003	-	-	-	-	-	1205	1205	1215	1220
220004	-	-	-	-	-	1265	1265	1275	1280
220005	1230	1230	1231	1231	1235	1245	1245	-	-

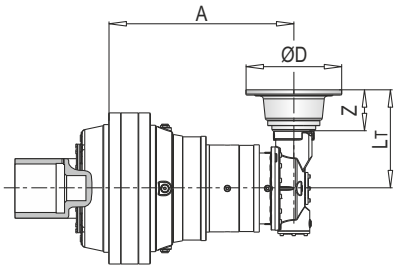

103

PLB 220000 FS - Giriş Milleri / Input Shafts / Antriebswellen / Alberi Entrata / Arbres D'entree / Ejes De Entrada

PLB	EL C 28					EL C 42					EML 42					EML 1"3/8 Z6					EM 65				
	A	LT	Z	L	Ød	A	LT	Z	L	Ød	A	LT	Z	L	Ød	A	LT	Z	L	Ød	A	LT	Z	L	Ød
220003	-					-					-					-					818.5	436.5	121.5	105	65
220004	-					-					-					-					832.5				
220005	917.5	304	64	50	28	917.5	304	64	82	42	917.5	334	94	82	42	917.5	334	94	106	1"3/8	917.5	361.5			

PLB	EM 1"3/8 Z6					EP 65				
	A	LT	Z	L	Ød	A	LT	Z	L	Ød
220003	818.5	436.5	121.5	105	1"3/8	818.5	468	153	105	65
220004	832.5					832.5				
220005	917.5	361.5				917.5	393			

PLB	~ Kg						
	EL C 28	EL C 42	EML 42	EML 1"3/8 Z6	EM 65	EM 1"3/8 Z6	EP 65
220003	-	-	-	-	1200	1200	1209
220004	-	-	-	-	1260	1260	1269
220005	1228.5	1229	1232	1232	1240	1240	1249

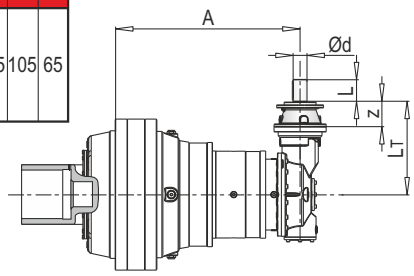

Ød
88-90

AKSESUARLAR / ACCESSORIES / ZUBEHÖR / ACCESSORI / ACCESSOIRES / ACCESORIOS

BS
Spline kaplin / Splined bushing / Innenverzahnte Buchse
Boccola scanalata / Moyeu cannelé / Casquillo ranurado

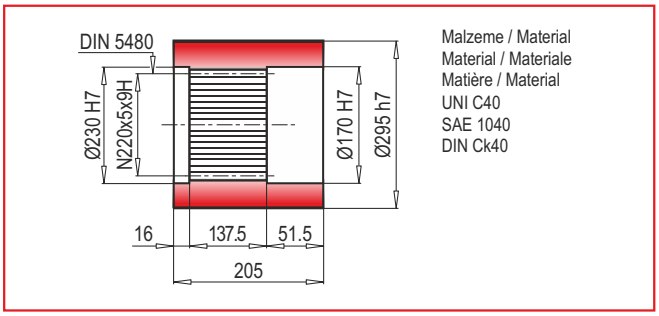

FF
Sabitleme rondelası / Stop bottom plate / Endscheibe
Fondello di arresto / Bouchon de fermeture / Tapón de detención

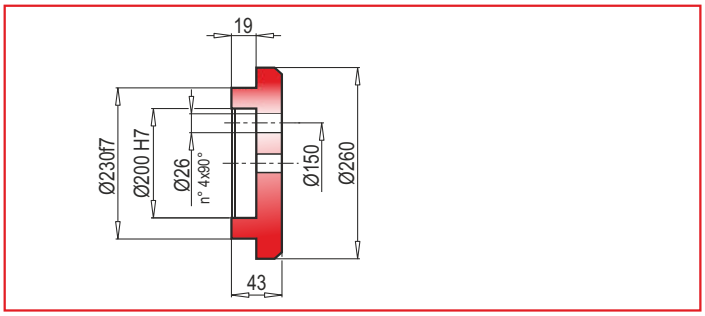

FL
Flanş / Flange / Flansch
Flangia / Bride / Brida

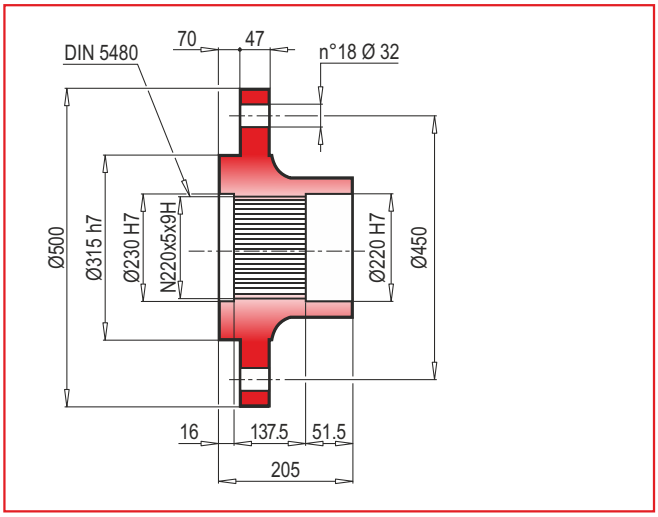

GA
Konik sıktırma / Shrink disc / Schrumpfscheibe
Giunto di attrito / Frette de serrage / Disco de contracción

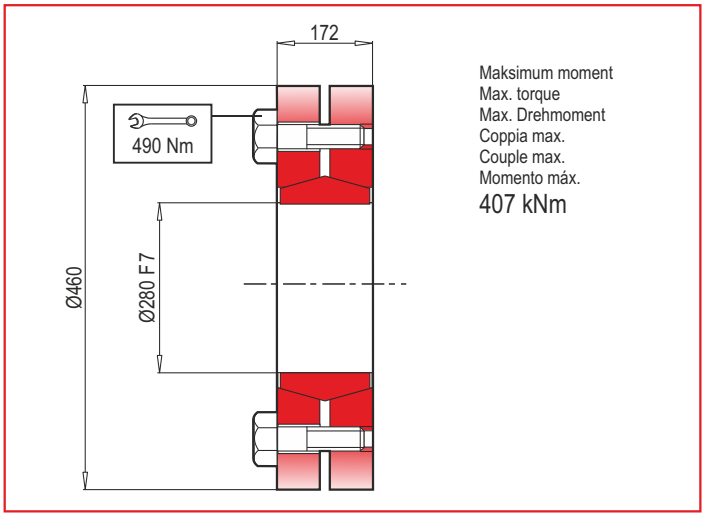

TR RADYAL YÜKLER (Fr)

Aşağıdaki grafikler istenilen n_2xh değerinin elde edilmesi için gerekli olan radyal yükleri ve K faktörlerini göstermektedir.

EN RADIAL LOADS (Fr)

The following curves show the radial loads and the K factors to obtain the required n2xh value.

DE RADIALLAST (Fr)

In den nachstehenden Diagrammen ist die Radiallast un der Koeffizient K dargestellt und kann mit dem gewünschten Wert n_2xh verglichen werden.

IT CARICHI RADIALI (Fr)

Nei diagrammi seguenti sono riportati i carichi radiali e i coefficienti K per rapportarli al valore n_2xh desiderato.

FR CHARGES RADIALES (Fr)

Dans les diagrammes suivants sont indiqués les charges radiales et les facteurs K de façon à obtenir la valeur n_2xh désirée.

ES CARGAS RADIALES (Fr)

En los siguientes diagramas se indican las cargas radiales y los coefici - entes K para obtener el valor requerido n_2xh.

M

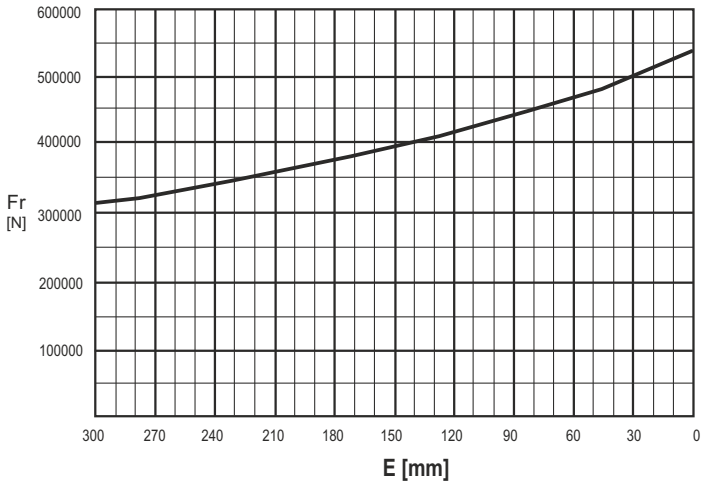

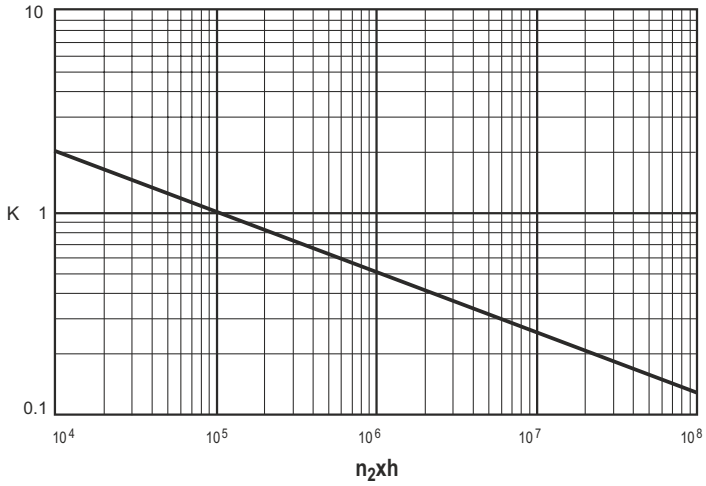

	n_2xh				
	10^5	10^4	10^6	10^7	10^8
M	Fr	Fr • K			

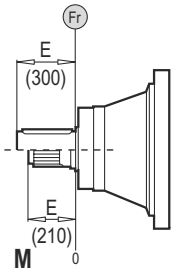

TR EKSENEL YÜKLER (Fa)

Tabloda yer alan eksenel yük değerleri, çıkış tipine ve uygulamanın yük yönüne göre değişir.

EN AXIAL LOADS (Fa)

The values of the axial loads in the table refer to the output versions and load direction of application.

DE AXIALLAST (Fa)

Die dargestellten Werte der Axiallast basieren auf der Version und der applizierten Lastrichtung.

IT CARICHI ASSIALI (Fa)

I valori dei carichi assiali indicati in tabella sono riferiti alle versioni e alla direzione di applicazione del carico.

FR CHARGES AXIALES (Fa)

Les valeurs des charges axiales indiquées dans le tableau se réfèrent aux versions et à la direction d'application de lacharge.

ES CARGAS AXIALES (Fa)

Los valores de las cargas axiales indicados en la tabla se refieren a las versiones y a la dirección de aplicación de la carga.

Fa [N]	M
	113600 ←
	113600 →

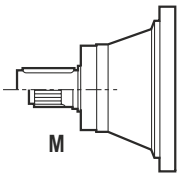

TEKNİK VERİLER / TECHNICAL DATA / TECHNISCHE DATEN / DATI TECNICI / DONNÉES TECHNIQUES / DATOS TÉCNICAS

	İges	Mmax (n_2 x h: 20000) (Nm)
250001	3.68 ... 4.94	559500
250002	14.88 ... 25.28	544400
250003	59.52 ... 158.01	518800
250004	218.24 ... 1106.05	434500
250005	1139.39 ... 8018.87	434500

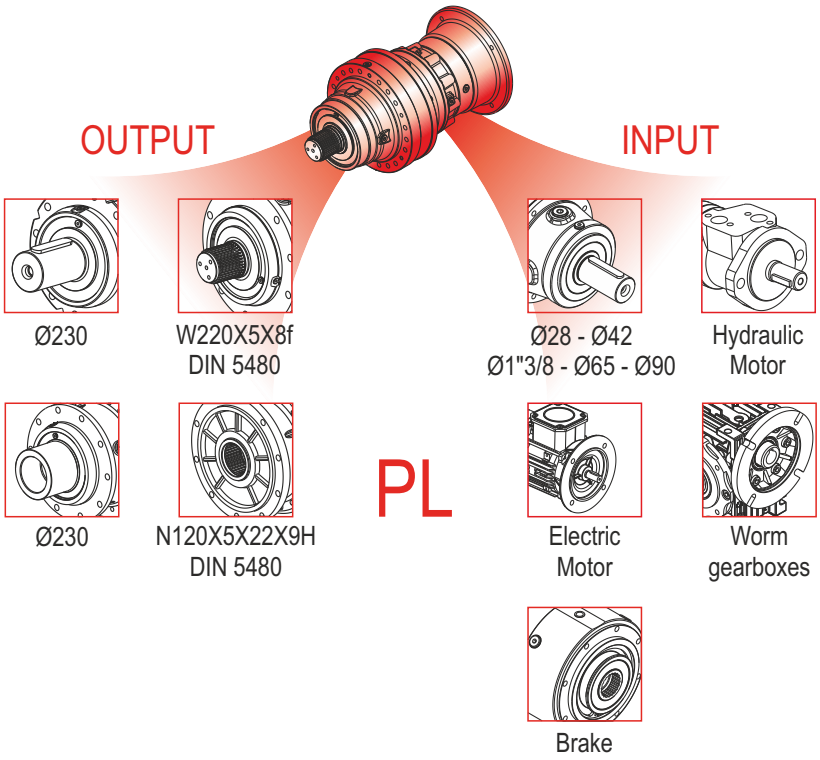

	İges	Mmax (n_2 x h: 20000) (Nm)
250004	182.81 ... 737.37	432800
250005	910.58 ... 6021.84	434500

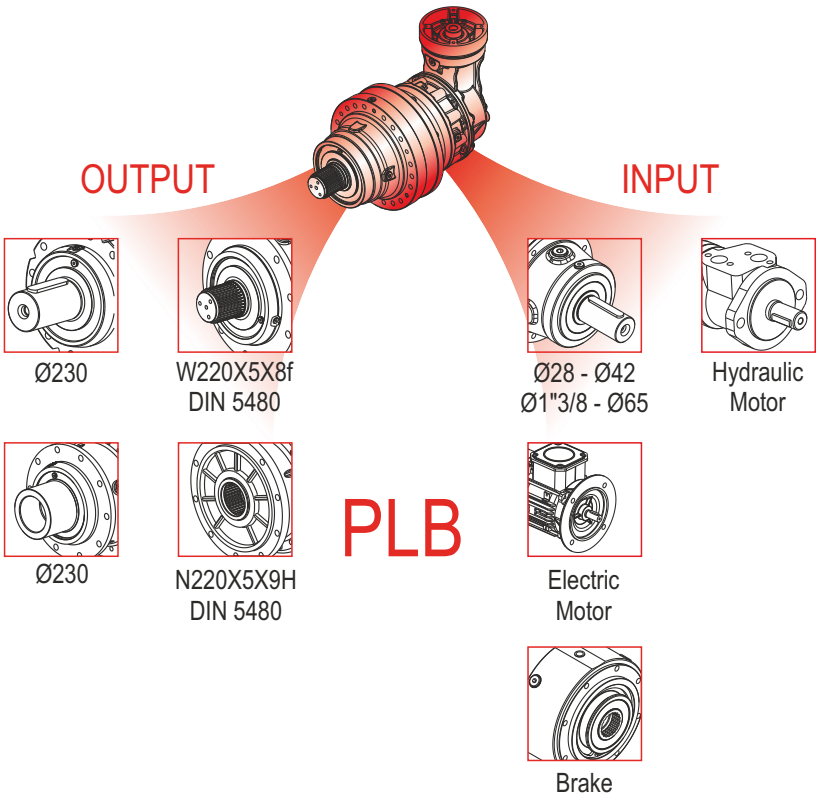

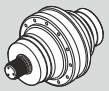	Pt [kW]	n_{1max} [min^{-1}]	i_{ges}	Mc [kNm] n_2 x h 10.000	n_2 x h 20.000	n_2 x h 50.000	n_2 x h 100.000	Giriş- Input - Antrieb - Entrata - Entrée - Entrada IEC (B5)	PMRV / PRV	EL - EML EM - EP - ET
PL 250001	136	200	3.68 4.94	327.0 235.5	294.5 212.1	256.3 184.6	224.9 176.6	160 | 200 | 250 180 | 225 | 280	-	-
PL 250002	83	1200	14.88 18.83 25.28	323.7 258.4 235.5	286.5 228.7 212.1	243.9 194.6 184.6	215.8 172.3 176.6	160 | 225 180 | 250 200 | 280	-	-
PL 250003	60	2000	59.52 75.33 79.90 97.93 103.87 117.71 131.46 158.01	308.6 258.4 235.5 258.4 235.5 223.5 235.5 235.5	273.1 228.7 212.1 228.7 212.1 197.8 212.1 212.1	232.5 194.6 184.6 194.6 184.6 168.4 184.6 184.6	205.7 172.3 176.6 172.3 176.6 149.0 176.6 176.6	160 180 200 225 250	-	ET 90
PL 250004	46	2800	218.24 276.22 333.61 380.85 433.70 489.66 521.27 579.36 624.21 682.69 724.09 790.04 873.90 920.23 1106.05	214.2 258.4 237.5 235.5 258.4 258.4 223.5 235.5 234.6 223.5 234.6 235.5 216.3 225.8 235.5	189.6 228.7 210.2 212.1 228.7 228.7 197.8 212.1 207.7 197.8 207.7 212.1 191.5 199.8 212.1	161.3 194.6 178.8 184.6 194.6 194.6 168.4 184.6 176.8 168.4 176.8 184.6 163.1 170.2 184.6	142.9 172.3 158.4 176.6 172.3 172.3 149.0 176.6 156.4 149.0 156.4 176.6 144.2 150.6 175.1	160 180 200 225	110 130 150	EM 65 EM 1"3/8 Z6 EP 65
PL 250005	40	2800	1139.39 1260.31 1356.53 1427.12 1571.02 1691.83 1757.78 1849.81 1967.74 2085.70 2188.69 2240.76 2313.83 2401.53 2483.17 2602.17 3144.29 4200.36 5073.16 5973.57 8018.87	258.4 237.5 258.4 258.4 235.5 235.5 235.5 258.4 235.5 235.5 235.5 258.4 235.5 235.5 235.5 258.4 258.4 235.5 235.5 206.1 235.5	228.7 210.2 228.7 228.7 212.1 212.1 212.1 228.7 212.1 212.1 212.1 228.7 212.1 212.1 212.1 228.7 228.7 212.1 212.1 182.5 212.1	194.6 178.8 194.6 194.6 184.6 184.6 184.3 194.6 184.6 184.6 184.6 194.6 184.6 184.6 184.6 194.6 194.6 184.6 184.6 155.4 184.6	172.3 158.4 172.3 172.3 176.6 176.6 163.0 172.3 176.6 176.6 176.6 172.3 176.6 176.6 176.6 172.3 172.3 176.6 176.6 137.4 175.1	63 71 80 90 100 112 132 160 180	050 063 075 090 110 130 150	EL C 28 EL C 42 EML 42 EML 1"3/8 Z6 EM 65 EM 1"3/8 Z6 EP 65

	Pt [kW]	n_{1max} [min^{-1}]	i_{ges}	Mc [kNm]				Giriş- Input - Antrieb - Entrata - Entrée - Entrada	
				n_2 x h	n_2 x h	n_2 x h	n_2 x h		
				10.000	20.000	50.000	100.000	IEC (B5)	EL - EML EM - EP - ET
PLB 250004	40	2500	182.81 231.38 300.79 351.55 383.44 457.01 485.31 549.29 613.49 737.37	197.9 233.4 258.4 213.0 234.6 255.9 235.5 223.5 235.5 235.5	160.8 189.6 227.8 172.9 207.7 207.8 212.1 197.8 212.1 212.1	122.2 144.1 173.1 131.3 176.8 157.8 184.6 168.4 184.6 184.6	99.2 117.1 140.7 106.6 156.4 128.1 176.6 145.7 157.4 176.6	160 180 200 225	EM 65 EM 1"3/8 Z6 EP 65
PLB 250005	35	2800	910.58 1012.06 1240.46 1380.08 1498.22 1547.08 1691.54 1746.70 1909.93 2001.43 2156.37 2270.71 2358.40 2501.39 2634.02 2846.34 3398.49 4151.28 5010.17 6021.84	194.9 209.9 242.0 219.0 258.4 235.5 258.4 235.5 234.6 235.5 234.6 235.5 223.5 234.6 235.5 206.1 234.6 235.5 225.8 235.5	158.4 170.5 196.7 193.8 224.4 212.1 228.7 212.1 207.7 212.1 207.7 212.1 197.8 207.7 212.1 182.5 207.7 212.1 199.8 212.1	120.4 129.5 149.4 161.0 170.5 174.4 185.6 184.6 176.8 184.6 176.8 184.6 168.4 176.8 184.6 155.4 176.8 184.6 170.2 184.6	97.7 105.3 121.4 130.8 138.5 141.7 150.9 154.2 156.4 169.6 156.4 176.6 149.0 156.4 176.6 137.4 156.4 176.6 150.6 175.1	80 90 100 112 132 160 180	EL C 28 EL C 42 EML 42 EML 1"3/8 Z6 EM 65 EM 1"3/8 Z6 EP 65

(n_2 x h = 20.000)

$$M_{max} = M_C \times 1.9$$

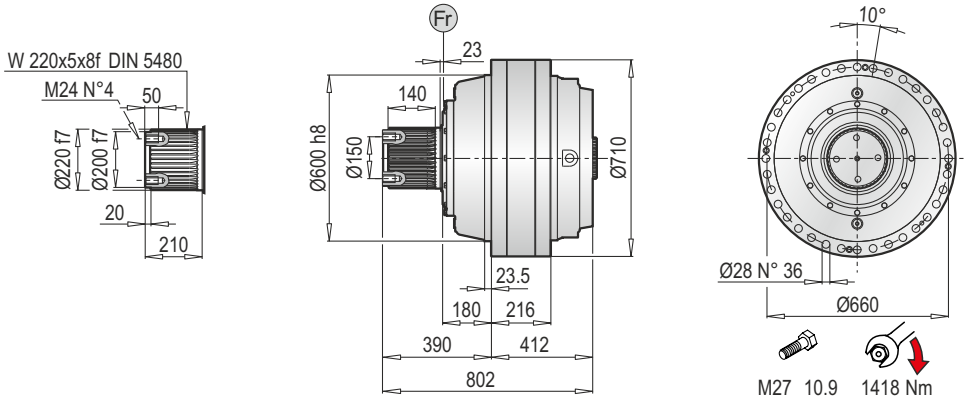

PL 250000 MS - Elektrik Motor Adaptörleri (IEC) / Electrıc Motor Couplings (IEC) / Anbauvorrichtung Für Elektromotore (IEC) / Predisposizioni Per Motori Elettrici (IEC) / Adaptations Pour Moteurs Electriques (IEC) / Acoplamientos Para Motores Eléctricos (IEC)

PL	IEC 63			IEC 71			IEC 80			IEC 90			IEC 100			IEC 112			IEC 132		
	LT	Z	ØD	LT	Z	ØD	LT	Z	ØD	LT	Z	ØD	LT	Z	ØD	LT	Z	ØD	LT	Z	ØD
250001	-			-			-			-			-			-			-		
250002	-			-			-			-			-			-			-		
250003	-			-			-			-			-			-			-		
250004	-			-			-			-			-			-			-		
250005	1038.5	36	140	1038.5	36	160	1058.5	56	200	1058.5	56	200	1068.5	66	250	1068.5	66	250	1102.5	100	300

PL	IEC 160			IEC 180			IEC 200			IEC 225			IEC 250			IEC 280		
	LT	Z	ØD	LT	Z	ØD	LT	Z	ØD	LT	Z	ØD	LT	Z	ØD	LT	Z	ØD
250001	562	150	350	562	150	350	562	150	400	551	139	450	551	139	550	551	139	550
250002	817			817			817			806			806			806		
250003	999			999			999			988			988			-		
250004	1091	148		1091	148		1091	148		1082			-			-		
250005	1141.5	139		1141.5	139		-			-			-			-		

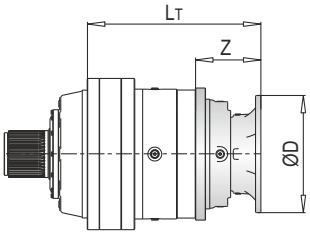

PL	IEC ~ Kg												
	63	71	80	90	100	112	132	160	180	200	225	250	280
250001	-	-	-	-	-	-	-	1030	1030	1035	1041	1053	1065
250002	-	-	-	-	-	-	-	1353	1353	1358	1364	1371	1388
250003	-	-	-	-	-	-	-	1469	1469	1474	1480	1519	-
250004	-	-	-	-	-	-	-	1473	1473	1483	1488	-	-
250005	1468	1468	1470	1470	1471	1471	1475	1485	1485	-	-	-	-

PL 250000 MS - Giriş Milleri / Input Shafts / Antriebswellen / Alberi Entrata / Arbres D'entree / Ejes De Entrada

PL	EL C 28				EL C 42				EML 42				EML 1"3/8 Z6				EM 65				EM 1"3/8 Z6			
	LT	Z	L	Ød	LT	Z	L	Ød	LT	Z	L	Ød	LT	Z	L	Ød	LT	Z	L	Ød	LT	Z	L	Ød
250003	-				-				-				-				-				-			
250004	-				-				-				-				1064.5	121.5	105	65	1064.5	121.5	105	1"3/8
250005	1066.5	64	50	28	1066.5	64	82	42	1096.5	94	82	42	1096.5	94	106	1"3/8	1124				1124			

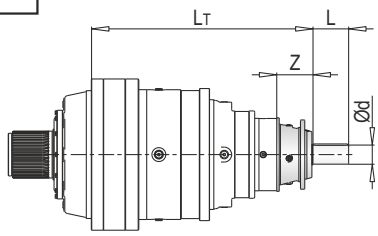

PL	EP 65				ET 90			
	LT	Z	L	Ød	LT	Z	L	Ød
250003	-				1020.5	171.5	170	90
250004	1096	153	105	65	-			
250005	1155.5				-			

PL	~ Kg							
	EL C 28	EL C 42	EML 42	EML 1"3/8 Z6	EM 65	EM 1"3/8 Z6	EP 65	ET 90
250003	-	-	-	-	-	-	-	1472
250004	-	-	-	-	1468	1468	1477	-
250005	1468.5	1469	1472	1472	1480	1480	1489	-

PL 250000 MS - Sonsuz Dişlili Redüktör Adaptörleri (PMRV/PRV) / Worm Gearbox Adaptors (PMRV/PRV) / Anschluss Für Schneckengetriebe (PMRV/PRV) / Predisposizioni Per Riduttori A Vite Senza Fine (PMRV/PRV) / Adaptation Pour Reducteurs A Vis Sans Fin (PMRV/PRV) / Acoplamiento Para Reductores De Tornillo Sin Fin (PMRV/PRV)

PL	PMRV/PRV 050					PMRV/PRV 063					PMRV/PRV 075				
	LM	l	h	MA	G	LM	l	h	MA	G	LM	l	h	MA	G
250004	-					-					-				
250005	1124	50	110	60	80	1133.5	63	113	72	95	1112.5	75	161	86	112.5

PL	PMRV/PRV 090					PMRV/PRV 110					PMRV/PRV 130				
	LM	l	h	MA	G	LM	l	h	MA	G	LM	l	h	MA	G
250004	-					1077	110	237.5	127.5	160	1082.5	130	277.5	147.5	180
250005	1122.5	90	193	103	129.5	1136.5					1142				

PL	PMRV/PRV 150				
	LM	l	h	MA	G
250004	1099	150	320	170	210
250005	1158.5				

PL	PMRV/PRV ~ Kg						
	050	063	075	090	110	130	150
250004	-	-	-	-	1497	1514	1550
250005	1471	1474.5	1477	1482	1509	1526	1562

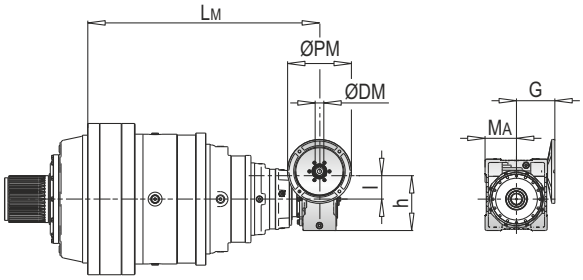

ØPM
ØDM
105

PLB 250000 MS - Elektrik Motor Adaptörleri (IEC) / Electric Motor Couplings (IEC) / Anbauvorrichtung Für Elektromotore (IEC) / Predisposizioni Per Motori Elettrici (IEC) / Adaptations Pour Moteurs Electriques (IEC) / Acoplamientos Para Motores Eléctricos (IEC)

PLB	IEC 80				IEC 90				IEC 100				IEC 112				IEC 132			
	A	LT	Z	ØD	A	LT	Z	ØD	A	LT	Z	ØD	A	LT	Z	ØD	A	LT	Z	ØD
250004	-				-				-				-				-			
250005	1031	296	56	200	1031	296	56	200	1031	306	66	250	1031	306	66	250	1031	340	100	300

PLB	IEC 160				IEC 180				IEC 200				IEC 225			
	A	LT	Z	ØD	A	LT	Z	ØD	A	LT	Z	ØD	A	LT	Z	ØD
250004	929	433	118	350	929	433	118	350	929	463	148	400	929	454	139	450
250005	1031	379	139		1031	379	139		-				-			

PLB	IEC ~ Kg								
	80	90	100	112	132	160	180	200	225
250004	-	-	-	-	-	1579	1579	1584	1590
250005	1512	1512	1513	1513	1517	1526	1526	-	-

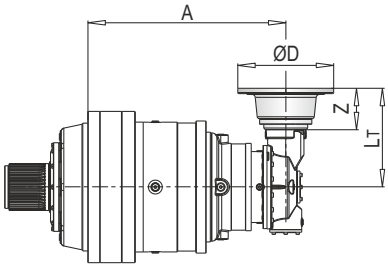

103

PLB 250000 MS - Giriş Milleri / Input Shafts / Antriebswellen / Alberi Entrata / Arbres D'entree / Ejes De Entrada

PLB	EL C 28					EL C 42					EML 42					EML 1"3/8 Z6					EM 65				
	A	LT	Z	L	Ød	A	LT	Z	L	Ød	A	LT	Z	L	Ød	A	LT	Z	L	Ød	A	LT	Z	L	Ød
250004	-					-					-					-					929	436.5	121.5	105	65
250005	1031	304	64	50	28	1031	304	64	82	42	1031	334	94	82	42	1031	334	94	106	1"3/8	1031	361.5			

PLB	EM 1"3/8 Z6					EP 65				
	A	LT	Z	L	Ød	A	LT	Z	L	Ød
250004	929	436.5	121.5	105	1"3/8	929	468	153	105	65
250005	1031	361.5				1031	393			

PLB	~ Kg						
	EL C 28	EL C 42	EML 42	EML 1"3/8 Z6	EM 65	EM 1"3/8 Z6	EP 65
250004	-	-	-	-	1551	1551	1560
250005	1510.5	1511	1514	1514	1522	1522	1531

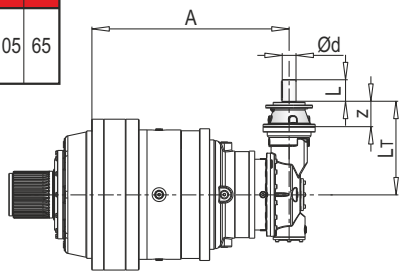

Ød
88-90

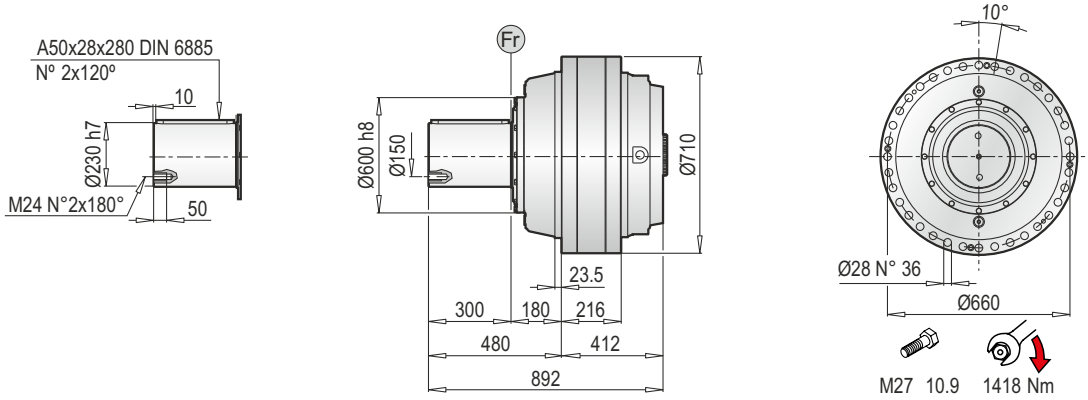

PL 250000 MC - Elektrik Motor Adaptörleri (IEC) / Electrıc Motor Couplings (IEC) / Anbauvorrichtung Für Elektromotore (IEC) / Predisposizioni Per Motori Elettrici (IEC) / Adaptations Pour Moteurs Electriques (IEC) / Acoplamientos Para Motores Eléctricos (IEC)

PL	IEC 63			IEC 71			IEC 80			IEC 90			IEC 100			IEC 112			IEC 132		
	LT	Z	ØD	LT	Z	ØD	LT	Z	ØD	LT	Z	ØD	LT	Z	ØD	LT	Z	ØD	LT	Z	ØD
250001	-			-			-			-			-			-			-		
250002	-			-			-			-			-			-			-		
250003	-			-			-			-			-			-			-		
250004	-			-			-			-			-			-			-		
250005	1038.5	36	140	1038.5	36	160	1058.5	56	200	1058.5	56	200	1068.5	66	250	1068.5	66	250	1102.5	100	300

PL	IEC 160			IEC 180			IEC 200			IEC 225			IEC 250			IEC 280		
	LT	Z	ØD	LT	Z	ØD	LT	Z	ØD	LT	Z	ØD	LT	Z	ØD	LT	Z	ØD
250001	562	150	350	562	150	350	562	150	400	551	139	450	551	139	550	551	139	550
250002	817			817			817			806			806			806		
250003	999			999			999			988			988			-		
250004	1091	148		1091	148		1091	148		1082			-			-		
250005	1141.5	139		1141.5	139		-			-			-			-		

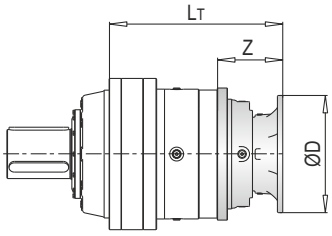

PL	IEC ~ Kg												
	63	71	80	90	100	112	132	160	180	200	225	250	280
250001	-	-	-	-	-	-	-	1030	1030	1035	1041	1053	1065
250002	-	-	-	-	-	-	-	1353	1353	1358	1364	1371	1388
250003	-	-	-	-	-	-	-	1469	1469	1474	1480	1519	-
250004	-	-	-	-	-	-	-	1473	1473	1483	1488	-	-
250005	1468	1468	1470	1470	1471	1471	1475	1485	1485	-	-	-	-

PL 250000 MC - Giriş Milleri / Input Shafts / Antriebswellen / Alberi Entrata / Arbres D'entree / Ejes De Entrada

PL	EL C 28				EL C 42				EML 42				EML 1"3/8 Z6				EM 65				EM 1"3/8 Z6			
	LT	Z	L	Ød	LT	Z	L	Ød	LT	Z	L	Ød	LT	Z	L	Ød	LT	Z	L	Ød	LT	Z	L	Ød
250003	-				-				-				-				-				-			
250004	-				-				-				-				1064.5	121.5	105	65	1064.5	121.5	105	1"3/8
250005	1066.5	64	50	28	1066.5	64	82	42	1096.5	94	82	42	1096.5	94	106	1"3/8	1124				1124			

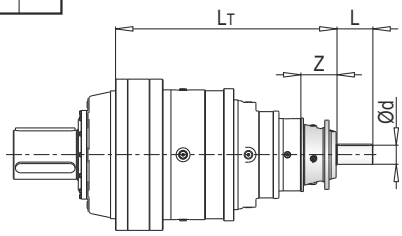

PL	EP 65				ET 90			
	LT	Z	L	Ød	LT	Z	L	Ød
250003	-				1020.5	171.5	170	90
250004	1096	153	105	65	-			
250005	1155.5				-			

PL	~ Kg							
	EL C 28	EL C 42	EML 42	EML 1"3/8 Z6	EM 65	EM 1"3/8 Z6	EP 65	ET 90
250003	-	-	-	-	-	-	-	1472
250004	-	-	-	-	1468	1468	1477	-
250005	1468.5	1469	1472	1472	1480	1480	1489	-

PL 250000 MC - Sonsuz Dişlili Redüktör Adaptörleri (PMRV/PRV) / Worm Gearbox Adaptors (PMRV/PRV) / Anschluss Für Schneckengetriebe (PMRV/PRV) / Predisposizioni Per Riduttori A Vite Senza Fine (PMRV/PRV) / Adaptation Pour Reducteurs A Vis Sans Fin (PMRV/PRV) / Acoplamiento Para Reductores De Tornillo Sin Fin (PMRV/PRV)

PL	PMRV/PRV 050					PMRV/PRV 063					PMRV/PRV 075				
	LM	l	h	MA	G	LM	l	h	MA	G	LM	l	h	MA	G
250004	-					-					-				
250005	1124	50	110	60	80	1133.5	63	113	72	95	1112.5	75	161	86	112.5

PL	PMRV/PRV 090					PMRV/PRV 110					PMRV/PRV 130				
	LM	l	h	MA	G	LM	l	h	MA	G	LM	l	h	MA	G
250004	-					1077	110	237.5	127.5	160	1082.5	130	277.5	147.5	180
250005	1122.5	90	193	103	129.5	1136.5					1142				

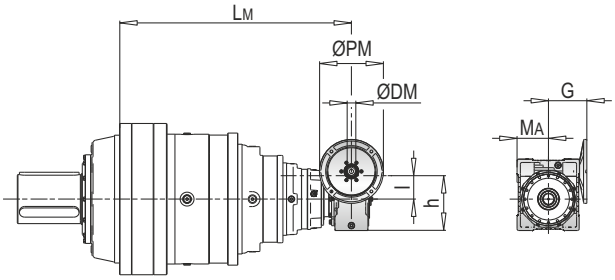

PL	PMRV/PRV 150				
	LM	l	h	MA	G
250004	1099	150	320	170	210
250005	1158.5				

PL	PMRV/PRV ~ Kg						
	050	063	075	090	110	130	150
250004	-	-	-	-	1497	1514	1550
250005	1471	1474.5	1477	1482	1509	1526	1562

ØPM
ØDM
105

PLB 250000 MC - Elektrik Motor Adaptörleri (IEC) / Electric Motor Couplings (IEC) / Anbauvorrichtung Für Elektromotore (IEC) / Predisposizioni Per Motori Elettrici (IEC) / Adaptations Pour Moteurs Electriques (IEC) / Acoplamientos Para Motores Eléctricos (IEC)

PLB	IEC 80				IEC 90				IEC 100				IEC 112				IEC 132			
	A	LT	Z	ØD	A	LT	Z	ØD	A	LT	Z	ØD	A	LT	Z	ØD	A	LT	Z	ØD
250004	-				-				-				-				-			
250005	1031	296	56	200	1031	296	56	200	1031	306	66	250	1031	306	66	250	1031	340	100	300

PLB	IEC 160				IEC 180				IEC 200				IEC 225			
	A	LT	Z	ØD	A	LT	Z	ØD	A	LT	Z	ØD	A	LT	Z	ØD
250004	929	433	118	350	929	433	118	350	929	463	148	400	929	454	139	450
250005	1031	379	139		1031	379	139		-				-			

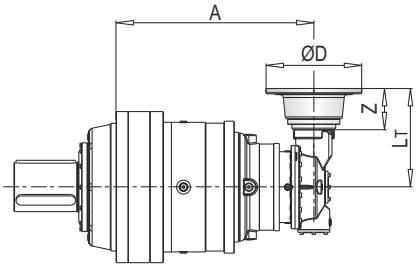

PLB	IEC ~ Kg								
	80	90	100	112	132	160	180	200	225
250004	-	-	-	-	-	1579	1579	1584	1590
250005	1512	1512	1513	1513	1517	1526	1526	-	-

103

PLB 250000 MC - Giriş Milleri / Input Shafts / Antriebswellen / Alberi Entrata / Arbres D'entree / Ejes De Entrada

PLB	EL C 28					EL C 42					EML 42					EML 1"3/8 Z6					EM 65				
	A	LT	Z	L	Ød	A	LT	Z	L	Ød	A	LT	Z	L	Ød	A	LT	Z	L	Ød	A	LT	Z	L	Ød
250004	-					-					-					-					929	436.5	121.5	105	65
250005	1031	304	64	50	28	1031	304	64	82	42	1031	334	94	82	42	1031	334	94	106	1"3/8	1031	361.5			

PLB	EM 1"3/8 Z6					EP 65				
	A	LT	Z	L	Ød	A	LT	Z	L	Ød
250004	929	436.5	121.5	105	1"3/8	929	468	153	105	65
250005	1031	361.5				1031	393			

PLB	~ Kg						
	EL C 28	EL C 42	EML 42	EML 1"3/8 Z6	EM 65	EM 1"3/8 Z6	EP 65
250004	-	-	-	-	1551	1551	1560
250005	1510.5	1511	1514	1514	1522	1522	1531

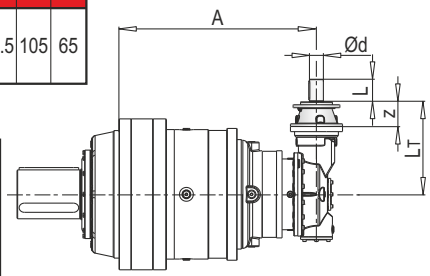

Ød
88-90

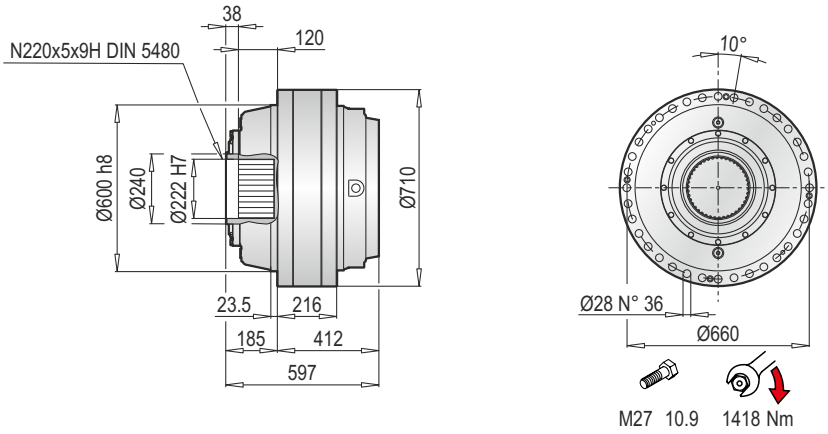

PL 250000 F - Elektrik Motor Adaptörleri (IEC) / Electric Motor Couplings (IEC) /Anbauvorrichtung Für Elektromotore (IEC) / Predisposizioni Per Motori Elettrici (IEC) / Adaptations Pour Moteurs Electriques (IEC) /Acoplamientos Para Motores Eléctricos (IEC)

PL	IEC 63			IEC 71			IEC 80			IEC 90			IEC 100			IEC 112			IEC 132		
	LT	Z	ØD	LT	Z	ØD	LT	Z	ØD	LT	Z	ØD	LT	Z	ØD	LT	Z	ØD	LT	Z	ØD
250001	-			-			-			-			-			-			-		
250002	-			-			-			-			-			-			-		
250003	-			-			-			-			-			-			-		
250004	-			-			-			-			-			-			-		
250005	1038.5	36	140	1038.5	36	160	1058.5	56	200	1058.5	56	200	1068.5	66	250	1068.5	66	250	1102.5	100	300

PL	IEC 160			IEC 180			IEC 200			IEC 225			IEC 250			IEC 280		
	LT	Z	ØD	LT	Z	ØD	LT	Z	ØD	LT	Z	ØD	LT	Z	ØD	LT	Z	ØD
250001	562	150	350	562	150	350	562	150	400	551	139	450	551	139	550	551	139	550
250002	817			817			817			806			806			806		
250003	999			999			999			988			988			-		
250004	1091	148		1091	148		1091	148		1082			-			-		
250005	1141.5	139		1141.5	139		-			-			-			-		

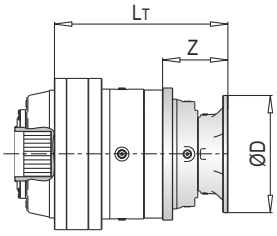

PL	IEC ~ Kg												
	63	71	80	90	100	112	132	160	180	200	225	250	280
250001	-	-	-	-	-	-	-	970	970	975	981	993	1005
250002	-	-	-	-	-	-	-	1293	1293	1298	1304	1311	1328
250003	-	-	-	-	-	-	-	1409	1409	1414	1420	1459	-
250004	-	-	-	-	-	-	-	1413	1413	1423	1428	-	-
250005	1408	1408	1410	1410	1411	1411	1415	1425	1425	-	-	-	-

PL 250000 F - Giriş Milleri / Input Shafts / Antriebswellen / Alberi Entrata / Arbres D'entree / Ejes De Entrada

PL	EL C 28				EL C 42				EML 42				EML 1"3/8 Z6				EM 65				EM 1"3/8 Z6			
	LT	Z	L	Ød	LT	Z	L	Ød	LT	Z	L	Ød	LT	Z	L	Ød	LT	Z	L	Ød	LT	Z	L	Ød
250003	-				-				-				-				-				-			
250004	-				-				-				-				1064.5	121.5	105	65	1064.5	121.5	105	1"3/8
250005	1066.5	64	50	28	1066.5	64	82	42	1096.5	94	82	42	1096.5	94	106	1"3/8	1124				1124			

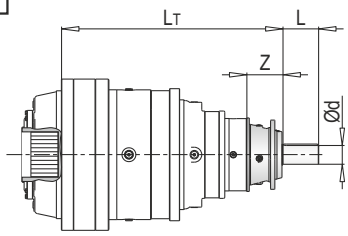

PL	EP 65				ET 90			
	LT	Z	L	Ød	LT	Z	L	Ød
250003	-				1020.5	171.5	170	90
250004	1096	153	105	65	-			
250005	1155.5				-			

PL	~ Kg							
	EL C 28	EL C 42	EML 42	EML 1"3/8 Z6	EM 65	EM 1"3/8 Z6	EP 65	ET 90
250003	-	-	-	-	-	-	-	1412
250004	-	-	-	-	1408	1408	1417	-
250005	1408.5	1409	1412	1412	1420	1420	1429	-

PL 250000 F - Sonsuz Dişlili Redüktör Adaptörleri (PMRV/PRV) / Worm Gearbox Adaptors (PMRV/PRV) / Anschluss Für Schneckengetriebe (PMRV/PRV) / Predisposizioni Per Riduttori A Vite Senza Fine (PMRV/PRV) / Adaptation Pour Reducteurs A Vis Sans Fin (PMRV/PRV) / Acoplamiento Para Reductores De Tornillo Sin Fin (PMRV/PRV)

PL	PMRV/PRV 050					PMRV/PRV 063					PMRV/PRV 075				
	LM	l	h	MA	G	LM	l	h	MA	G	LM	l	h	MA	G
250004	-					-					-				
250005	1124	50	110	60	80	1133.5	63	113	72	95	1112.5	75	161	86	112.5

PL	PMRV/PRV 090					PMRV/PRV 110					PMRV/PRV 130				
	LM	l	h	MA	G	LM	l	h	MA	G	LM	l	h	MA	G
250004	-					1077	110	237.5	127.5	160	1082.5	130	277.5	147.5	180
250005	1122.5	90	193	103	129.5	1136.5					1142				

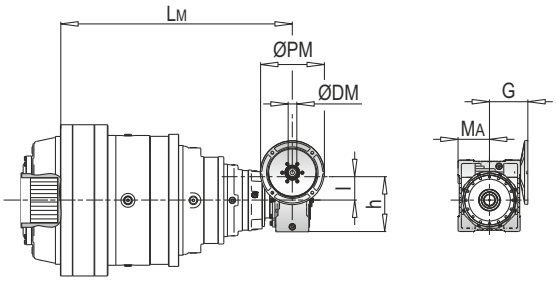

PL	PMRV/PRV 150				
	LM	l	h	MA	G
250004	1099	150	320	170	210
250005	1158.5				

PL	PMRV/PRV ~ Kg						
	050	063	075	090	110	130	150
250004	-	-	-	-	1437	1454	1490
250005	1411	1414.5	1417	1422	1449	1466	1502

ØPM
ØDM
105

PLB 250000 F - Elektrik Motor Adaptörleri (IEC) / Electric Motor Couplings (IEC) / Anbauvorrichtung Für Elektromotore (IEC) / Predisposizioni Per Motori Elettrici (IEC) / Adaptations Pour Moteurs Electriques (IEC) / Acoplamientos Para Motores Eléctricos (IEC)

PLB	IEC 80				IEC 90				IEC 100				IEC 112				IEC 132			
	A	LT	Z	ØD	A	LT	Z	ØD	A	LT	Z	ØD	A	LT	Z	ØD	A	LT	Z	ØD
250004	-				-				-				-				-			
250005	1031	296	56	200	1031	296	56	200	1031	306	66	250	1031	306	66	250	1031	340	100	300

PLB	IEC 160				IEC 180				IEC 200				IEC 225			
	A	LT	Z	ØD	A	LT	Z	ØD	A	LT	Z	ØD	A	LT	Z	ØD
250004	929	433	118	350	929	433	118	350	929	463	148	400	929	454	139	450
250005	1031	379	139		1031	379	139		-				-			

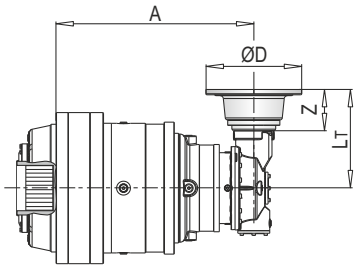

PLB	IEC ~ Kg								
	80	90	100	112	132	160	180	200	225
250004	-	-	-	-	-	1519	1519	1524	1530
250005	1452	1452	1453	1453	1457	1466	1466	-	-

103

PLB 250000 F - Giriş Milleri / Input Shafts / Antriebswellen / Alberi Entrata / Arbres D'entree / Ejes De Entrada

PLB	EL C 28					EL C 42					EML 42					EML 1"3/8 Z6					EM 65				
	A	LT	Z	L	Ød	A	LT	Z	L	Ød	A	LT	Z	L	Ød	A	LT	Z	L	Ød	A	LT	Z	L	Ød
250004	-					-					-					-					929	436.5	121.5	105	65
250005	1031	304	64	50	28	1031	304	64	82	42	1031	334	94	82	42	1031	334	94	106	1"3/8	1031	361.5			

PLB	EM 1"3/8 Z6					EP 65				
	A	LT	Z	L	Ød	A	LT	Z	L	Ød
250004	929	436.5	121.5	105	1"3/8	929	468	153	105	65
250005	1031	361.5				1031	393			

PLB	~ Kg						
	EL C 28	EL C 42	EML 42	EML 1"3/8 Z6	EM 65	EM 1"3/8 Z6	EP 65
250004	-	-	-	-	1491	1491	1500
250005	1450.5	1451	1454	1454	1462	1462	1471

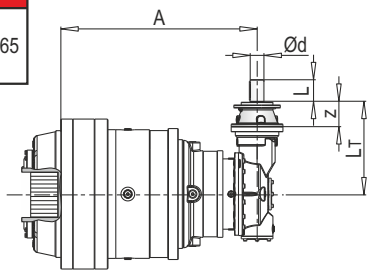

Ød
88-90

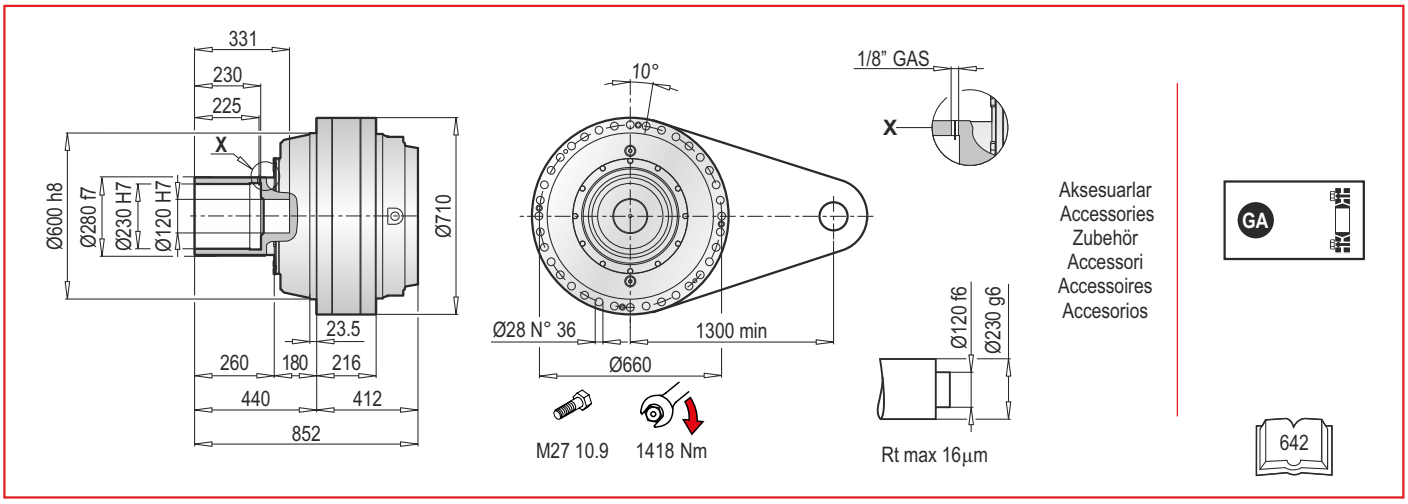

PL 250000 FS - Elektrik Motor Adaptörleri (IEC) / Electrıc Motor Couplings (IEC) / Anbauvorrichtung Für Elektromotore (IEC) / Predisposizioni Per Motori Elettrici (IEC) / Adaptations Pour Moteurs Electriques (IEC) / Acoplamientos Para Motores Eléctricos (IEC)

PL	IEC 63			IEC 71			IEC 80			IEC 90			IEC 100			IEC 112			IEC 132		
	LT	Z	ØD	LT	Z	ØD	LT	Z	ØD	LT	Z	ØD	LT	Z	ØD	LT	Z	ØD	LT	Z	ØD
250001	-			-			-			-			-			-			-		
250002	-			-			-			-			-			-			-		
250003	-			-			-			-			-			-			-		
250004	-			-			-			-			-			-			-		
250005	1038.5	36	140	1038.5	36	160	1058.5	56	200	1058.5	56	200	1068.5	66	250	1068.5	66	250	1102.5	100	300

PL	IEC 160			IEC 180			IEC 200			IEC 225			IEC 250			IEC 280		
	LT	Z	ØD	LT	Z	ØD	LT	Z	ØD	LT	Z	ØD	LT	Z	ØD	LT	Z	ØD
250001	562	150	350	562	150	350	562	150	400	551	139	450	551	139	550	551	139	550
250002	817			817			817			806			806			806		
250003	999			999			999			988			988			-		
250004	1091	148		1091	148		1091	148		1082			-			-		
250005	1141.5	139		1141.5	139		-			-			-			-		

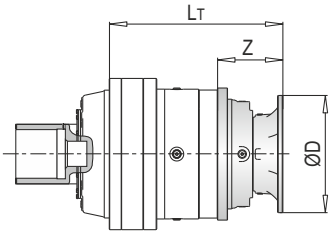

PL	IEC ~ Kg												
	63	71	80	90	100	112	132	160	180	200	225	250	280
250001	-	-	-	-	-	-	-	1008	1008	1013	1019	1031	1043
250002	-	-	-	-	-	-	-	1331	1331	1336	1342	1349	1366
250003	-	-	-	-	-	-	-	1447	1447	1452	1458	1497	-
250004	-	-	-	-	-	-	-	1451	1451	1461	1466	-	-
250005	1446	1446	1448	1448	1449	1449	1453	1463	1463	-	-	-	-

PL 250000 FS - Giriş Milleri / Input Shafts / Antriebswellen / Alberi Entrata / Arbres D'entree / Ejes De Entrada

PL	EL C 28				EL C 42				EML 42				EML 1"3/8 Z6				EM 65				EM 1"3/8 Z6			
	LT	Z	L	Ød	LT	Z	L	Ød	LT	Z	L	Ød	LT	Z	L	Ød	LT	Z	L	Ød	LT	Z	L	Ød
250003	-				-				-				-				-				-			
250004	-				-				-				-				1064.5	121.5	105	65	1064.5	121.5	105	1"3/8
250005	1066.5	64	50	28	1066.5	64	82	42	1096.5	94	82	42	1096.5	94	106	1"3/8	1124				1124			

PL	EP 65				ET 90			
	LT	Z	L	Ød	LT	Z	L	Ød
250003	-				1020.5	171.5	170	90
250004	1096	153	105	65	-			
250005	1155.5				-			

PL	~ Kg							
	EL C 28	EL C 42	EML 42	EML 1"3/8 Z6	EM 65	EM 1"3/8 Z6	EP 65	ET 90
250003	-	-	-	-	-	-	-	1450
250004	-	-	-	-	1446	1446	1455	-
250005	1446.5	1447	1450	1450	1458	1458	1467	-

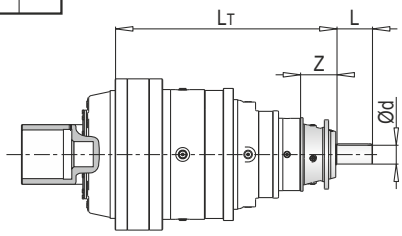

PL 250000 FS - Sonsuz Dişlili Redüktör Adaptörleri (PMRV/PRV) / Worm Gearbox Adaptors (PMRV/PRV) / Anschluss Für Schneckengetriebe (PMRV/PRV) / Predisposizioni Per Riduttori A Vite Senza Fine (PMRV/PRV) / Adaptation Pour Reducteurs A Vis Sans Fin (PMRV/PRV) / Acoplamiento Para Reductores De Tornillo Sin Fin (PMRV/PRV)

PL	PMRV/PRV 050					PMRV/PRV 063					PMRV/PRV 075				
	LM	l	h	MA	G	LM	l	h	MA	G	LM	l	h	MA	G
250004	-					-					-				
250005	1124	50	110	60	80	1133.5	63	113	72	95	1112.5	75	161	86	112.5

PL	PMRV/PRV 090					PMRV/PRV 110					PMRV/PRV 130				
	LM	l	h	MA	G	LM	l	h	MA	G	LM	l	h	MA	G
250004	-					1077	110	237.5	127.5	160	1082.5	130	277.5	147.5	180
250005	1122.5	90	193	103	129.5	1136.5					1142				

PL	PMRV/PRV 150				
	LM	l	h	MA	G
250004	1099	150	320	170	210
250005	1158.5				

PL	PMRV/PRV ~ Kg						
	050	063	075	090	110	130	150
250004	-	-	-	-	1475	1492	1528
250005	1449	1452.5	1455	1460	1487	1504	1540

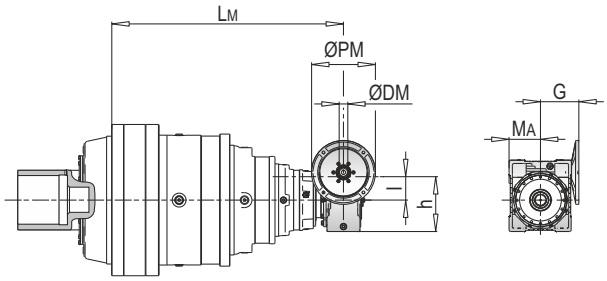

ØPM
ØDM
105

PLB 250000 FS - Elektrik Motor Adaptörleri (IEC) / Electric Motor Couplings (IEC) / Anbauvorrichtung Für Elektromotore (IEC) / Predisposizioni Per Motori Elettrici (IEC) / Adaptations Pour Moteurs Electriques (IEC) / Acoplamientos Para Motores Eléctricos (IEC)

PLB	IEC 80				IEC 90				IEC 100				IEC 112				IEC 132			
	A	LT	Z	ØD	A	LT	Z	ØD	A	LT	Z	ØD	A	LT	Z	ØD	A	LT	Z	ØD
250004	-				-				-				-				-			
250005	1031	296	56	200	1031	296	56	200	1031	306	66	250	1031	306	66	250	1031	340	100	300

PLB	IEC 160				IEC 180				IEC 200				IEC 225			
	A	LT	Z	ØD	A	LT	Z	ØD	A	LT	Z	ØD	A	LT	Z	ØD
250004	929	433	118	350	929	433	118	350	929	463	148	400	929	454	139	450
250005	1031	379	139		1031	379	139		-				-			

PLB	IEC ~ Kg								
	80	90	100	112	132	160	180	200	225
250004	-	-	-	-	-	1557	1557	1562	1568
250005	1490	1490	1491	1491	1495	1504	1504	-	-

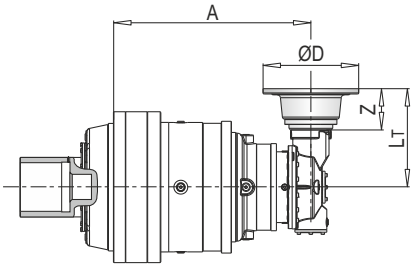

103

PLB 250000 FS - Giriş Milleri / Input Shafts / Antriebswellen / Alberi Entrata / Arbres D'entree / Ejes De Entrada

PLB	EL C 28					EL C 42					EML 42					EML 1"3/8 Z6					EM 65				
	A	LT	Z	L	Ød	A	LT	Z	L	Ød	A	LT	Z	L	Ød	A	LT	Z	L	Ød	A	LT	Z	L	Ød
250004	-					-					-					-					929	436.5	121.5	105	65
250005	1031	304	64	50	28	1031	304	64	82	42	1031	334	94	82	42	1031	334	94	106	1"3/8	1031	361.5			

PLB	EM 1"3/8 Z6					EP 65				
	A	LT	Z	L	Ød	A	LT	Z	L	Ød
250004	929	436.5	121.5	105	1"3/8	929	468	153	105	65
250005	1031	361.5				1031	939			

PLB	~ Kg						
	EL C 28	EL C 42	EML 42	EML 1"3/8 Z6	EM 65	EM 1"3/8 Z6	EP 65
250004	-	-	-	-	1529	1529	1538
250005	1488.5	1489	1492	1492	1500	1500	1509

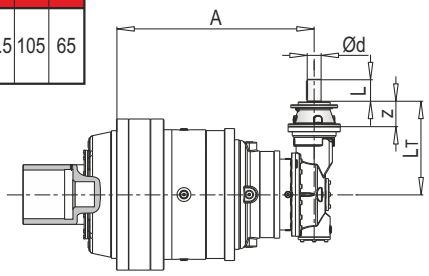

Ød
88-90

AKSESUARLAR / ACCESSORIES / ZUBEHÖR / ACCESSORI / ACCESSOIRES / ACCESORIOS

GA

Konik sıktırma / Shrink disc / Schrumpfscheibe
Giunto di attrito / Frette de serrage / Disco de contracción

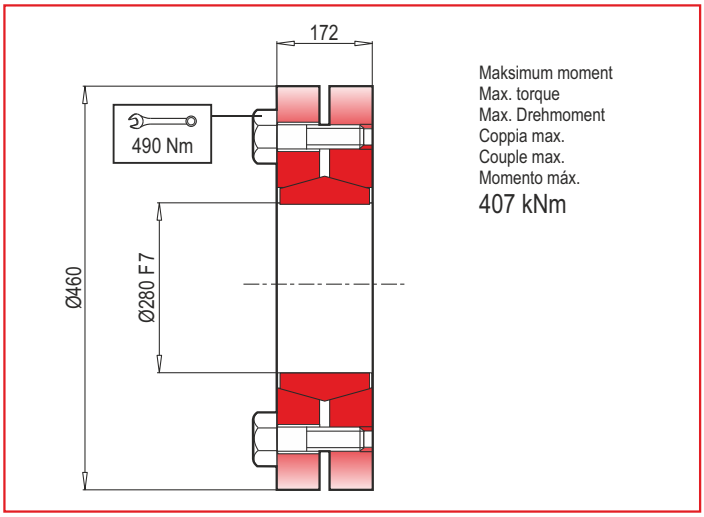

TR RADYAL YÜKLER (Fr)

Aşağıdaki grafikler istenilen n_2xh değerinin elde edilmesi için gerekli olan radyal yükleri ve K faktörlerini göstermektedir.

EN RADIAL LOADS (Fr)

The following curves show the radial loads and the K factors to obtain the required n2xh value.

DE RADIALLAST (Fr)

In den nachstehenden Diagrammen ist die Radiallast un der Koeffizient K dargestellt und kann mit dem gewünschten Wert n_2xh verglichen werden.

IT CARICHI RADIALI (Fr)

Nei diagrammi seguenti sono riportati i carichi radiali e i coefficienti K per rapportarli al valore n_2xh desiderato.

FR CHARGES RADIALES (Fr)

Dans les diagrammes suivants sont indiqués les charges radiales et les facteurs K de façon à obtenir la valeur n_2xh désirée.

ES CARGAS RADIALES (Fr)

En los siguientes diagramas se indican las cargas radiales y los coefici - entes K para obtener el valor requerido n_2xh.

M

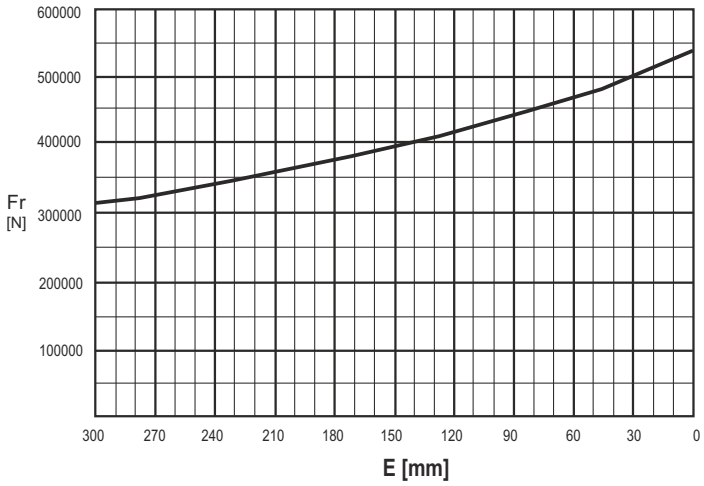

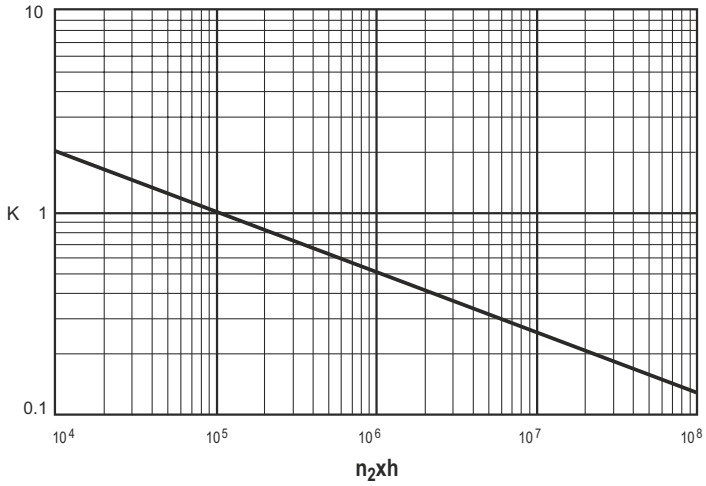

	n_2xh				
	10^5	10^4	10^6	10^7	10^8
M	Fr	Fr • K			

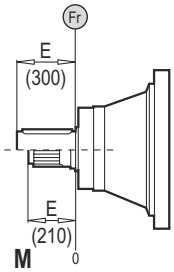

TR EKSENEL YÜKLER (Fa)

Tabloda yer alan eksenel yük değerleri, çıkış tipine ve uygulamanın yük yönüne göre değişir.

EN AXIAL LOADS (Fa)

The values of the axial loads in the table refer to the output versions and load direction of application.

DE AXIALLAST (Fa)

Die dargestellten Werte der Axiallast basieren auf der Version und der applizierten Lastrichtung.

IT CARICHI ASSIALI (Fa)

I valori dei carichi assiali indicati in tabella sono riferiti alle versioni e alla direzione di applicazione del carico.

FR CHARGES AXIALES (Fa)

Les valeurs des charges axiales indiquées dans le tableau se réfèrent aux versions et à la direction d'application de lacharge.

ES CARGAS AXIALES (Fa)

Los valores de las cargas axiales indicados en la tabla se refieren a las versiones y a la dirección de aplicación de la carga.

Fa [N]	M
	160500 ←
	113600 →

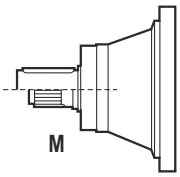

TEKNİK VERİLER / TECHNICAL DATA / TECHNISCHE DATEN / DATI TECNICI / DONNÉES TECHNIQUES / DATOS TÉCNICAS

	i_{ges}	Mmax (n_2 x h: 20000) (Nm)
300001	3.43 ... 5.25	669000
300002	14.03 ... 29.64	568800
300003	56.11 ... 167.92	568800
300004	199.52 ... 973.95	568800
300005	1154.57 ... 8522.08	568800

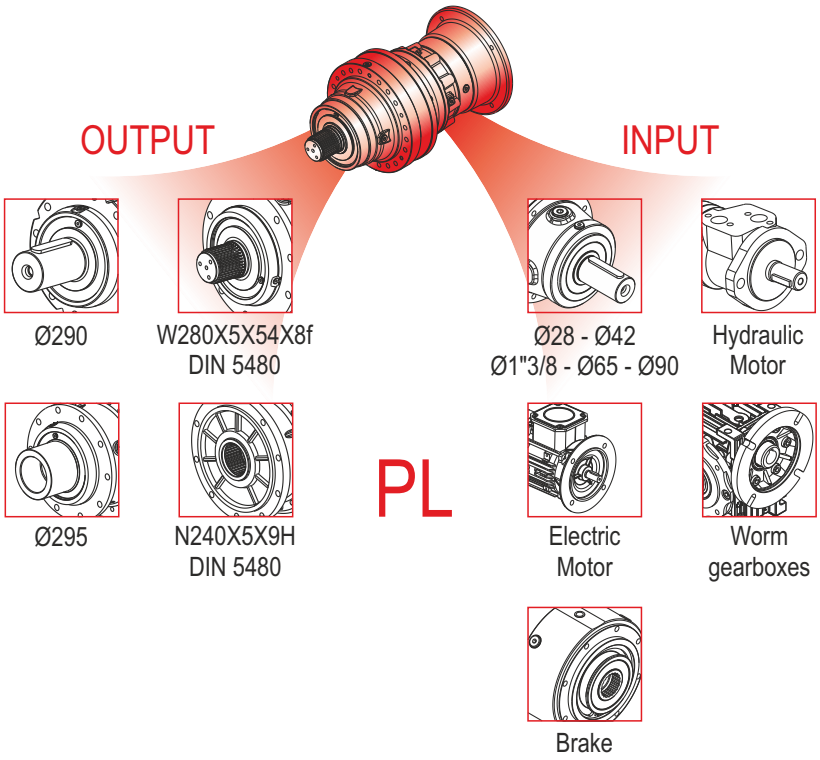

	i_{ges}	Mmax (n_2 x h: 20000) (Nm)
300004	264.13 ... 783.64	500700
300005	931.09 ... 6399.72	568800

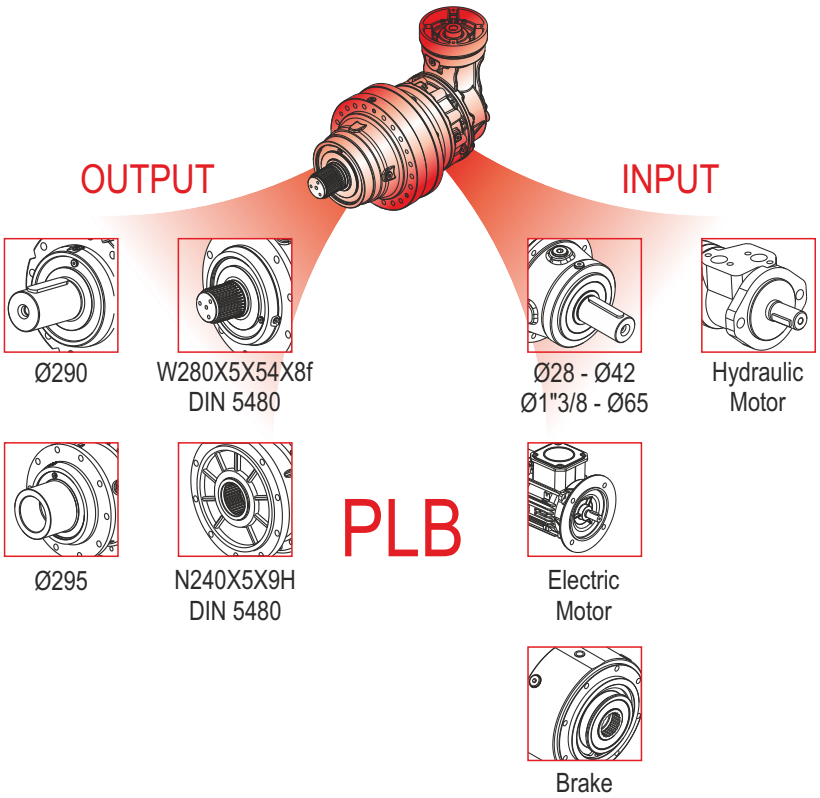

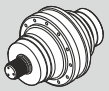	Pt [kW]	n_{1max} [min^{-1}]	i_{ges}	Mc [kNm] n_2 x h 10.000	Mc [kNm] n_2 x h 20.000	Mc [kNm] n_2 x h 50.000	Mc [kNm] n_2 x h 100.000	Giriş- Input - Antrieb - Entrata - Entrée - Entrada IEC (B5)	PMRV / PRV	EL - EML EM - EP - ET
PL 300001	214	200	3.43 4.09 5.25	351.0 412.8 309.0	316.0 371.7 278.2	275.1 323.5 242.1	247.8 291.2 227.0	160 | 200 | 250 180 | 225 | 280	-	-
PL 300002	110	750	14.03 16.54 18.01 21.23 25.48 29.64	351.0 353.2 351.0 309.0 346.9 148.0	316.0 312.6 316.0 278.2 312.3 131.0	275.1 266.0 275.1 242.1 271.9 111.5	247.8 235.5 247.8 227.0 259.9 98.6	160 180 200 225 250 280	-	-
PL 300003	81	1500	56.11 66.15 72.03 84.74 107.47 129.71 139.71 167.92	351.0 336.6 351.0 351.0 309.0 309.0 309.0 299.5	316.0 297.9 316.0 316.0 278.2 278.2 278.2 265.1	269.9 253.6 275.1 275.1 242.1 242.1 242.1 225.6	238.9 224.4 247.8 247.8 227.0 227.0 227.0 199.6	160 180 200 225 250 280	-	ET 90
PL 300004	65	2800	199.52 256.11 308.70 394.06 433.06 488.86 555.88 618.72 698.56 743.66 839.61 973.95	351.0 351.0 351.0 309.0 309.0 309.0 309.0 309.0 309.0 299.5 299.5 299.5	313.9 316.0 316.0 278.2 278.2 278.2 278.2 278.2 278.2 265.1 265.1 265.1	267.0 275.1 275.1 242.1 242.1 240.8 242.1 242.1 242.1 225.6 225.6 225.6	236.4 247.8 247.8 227.0 227.0 213.1 227.0 227.0 227.0 199.6 199.6 199.6	160 180 200 225 250	110 130 150	EM 65 EM 1"3/8 Z6 EP 65
PL 300005	55	2800	1154.57 1273.39 1391.67 1529.06 1594.95 1669.60 1743.10 1846.79 1935.27 2024.24 2113.14 2277.65 2364.35 2525.76 2646.76 2767.06 2855.65 3609.22 4485.75 5064.55 6347.48 8522.08	353.0 351.0 353.0 309.0 351.0 309.0 353.0 309.0 309.0 353.0 309.0 313.2 309.0 309.0 309.0 309.0 309.0 309.0 309.0 309.0 309.0 309.0 276.2	312.5 316.0 312.5 278.2 316.0 278.2 312.5 278.2 278.2 312.5 278.2 277.2 276.1 278.2 278.2 278.2 278.2 278.2 278.2 278.2 278.2 278.2 244.5	265.9 275.1 265.9 240.8 275.1 240.8 265.9 240.8 242.1 265.9 242.1 235.7 235.2 240.8 242.1 242.1 239.6 242.1 242.1 242.1 242.1 242.1 208.3	235.3 247.8 235.3 213.1 247.8 213.1 235.3 213.1 227.0 235.3 227.0 208.9 208.0 213.1 227.0 227.0 212.4 227.0 227.0 227.0 227.0 227.0 184.2	63 71 80 90 100 112 132 160 180	050 063 075 090 110 130 150	EL C 28 EL C 42 EML 42 EML 1"3/8 Z6 EM 65 EM 1"3/8 Z6 EP 65

	Pt [kW]	n_{1max} [min^{-1}]	i_{ges}	Mc [kNm]				Giriş- Input - Antrieb - Entrata - Entrée - Entrada	
				n_2 x h	n_2 x h	n_2 x h	n_2 x h		
				10.000	20.000	50.000	100.000	IEC (B5)	EL - EML EM - EP - ET
PLB 300004	56	2500	264.13 339.05 429.11 515.76 605.29 651.99 783.64	256.0 304.9 309.0 299.5 309.0 309.0 299.5	208.0 247.8 278.2 265.1 253.0 266.4 265.1	158.1 188.3 222.1 225.6 192.1 202.3 225.6	128.4 153.0 180.3 199.6 156.0 164.2 186.8	160 180 200 225 250	EM 65 EM 1"3/8 Z6 EP 65
PLB 300005	48	2800	931.09 1036.22 1195.16 1338.25 1457.55 1574.41 1688.78 1769.68 1829.33 1906.68 2020.94 2137.41 2214.57 2413.20 2569.00 2900.48 3364.56 4571.23 5302.63 6399.72	351.0 353.0 351.0 352.4 332.8 353.0 300.4 309.0 309.0 285.8 309.0 309.0 332.8 309.0 299.5 299.5 299.5 299.5 299.5 276.2	313.9 312.5 316.0 312.0 294.6 312.5 244.1 252.1 278.2 253.1 278.2 278.2 294.6 278.2 265.1 265.1 265.1 265.1 265.1 244.5	244.3 265.9 275.1 265.6 250.5 265.9 185.4 191.7 242.1 201.9 242.1 218.7 250.5 238.1 225.6 225.6 225.6 225.6 225.6 208.3	198.3 235.3 236.2 235.0 222.1 235.3 150.7 155.7 227.0 164.0 227.0 177.7 222.1 193.4 199.6 199.6 199.6 196.4 199.6 184.2	80 90 100 112 132 160 180	EL C 28 EL C 42 EML 42 EML 1"3/8 Z6 EM 65 EM 1"3/8 Z6 EP 65

⚠

(n_2 x h = 20.000)

$$M_{max} = M_C \times 1.8$$

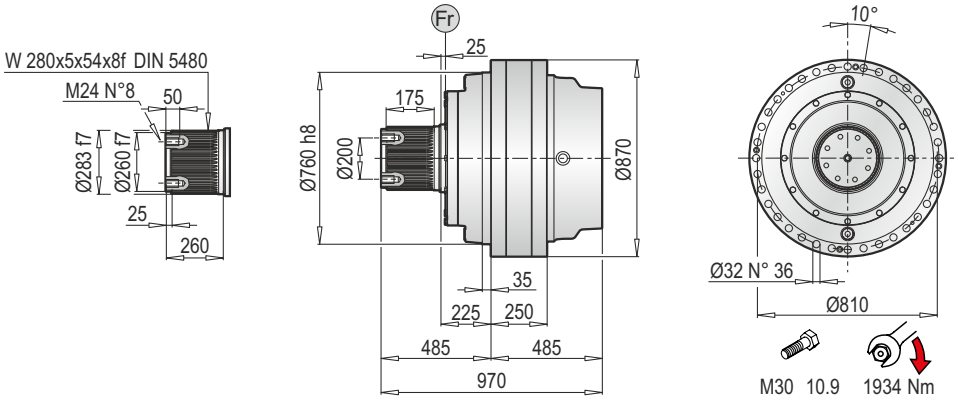

PL 300000 MS - Elektrik Motor Adaptörleri (IEC) / Electrıc Motor Couplings (IEC) / Anbauvorrichtung Für Elektromotore (IEC) / Predisposizioni Per Motori Elettrici (IEC) / Adaptations Pour Moteurs Electriques (IEC) / Acoplamientos Para Motores Eléctricos (IEC)

PL	IEC 63			IEC 71			IEC 80			IEC 90			IEC 100			IEC 112			IEC 132		
	LT	Z	ØD	LT	Z	ØD	LT	Z	ØD	LT	Z	ØD	LT	Z	ØD	LT	Z	ØD	LT	Z	ØD
300001	-			-			-			-			-			-			-		
300002	-			-			-			-			-			-			-		
300003	-			-			-			-			-			-			-		
300004	-			-			-			-			-			-			-		
300005	1111.5	36	140	1111.5	36	160	1131.5	56	200	1131.5	56	200	1141.5	66	250	1141.5	66	250	1175.5	100	300

PL	IEC 160			IEC 180			IEC 200			IEC 225			IEC 250			IEC 280		
	LT	Z	ØD	LT	Z	ØD	LT	Z	ØD	LT	Z	ØD	LT	Z	ØD	LT	Z	ØD
300001	635	150	350	635	150	350	635	150	400	624	139	450	624	139	550	624	139	550
300002	890			890			890			879			879			879		
300003	1072			1072			1072			1061			1061			1061		
300004	1134	118		1134	118		1164	148		1155			1164.5	148.5		-		
300005	1214.5	139		1214.5	139		-			-			-			-		

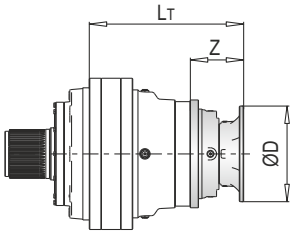

PL	IEC ~ Kg												
	63	71	80	90	100	112	132	160	180	200	225	250	280
300001	-	-	-	-	-	-	-	1955	1955	1960	1966	1978	1990
300002	-	-	-	-	-	-	-	2263	2263	2268	2274	2286	2298
300003	-	-	-	-	-	-	-	2437	2437	2442	2468	2460	2472
300004	-	-	-	-	-	-	-	2434	2434	2444	2449	2490	-
300005	2453	2453	2455	2455	2456	2456	2460	2470	2470	-	-	-	-

PL 300000 MS - Giriş Milleri / Input Shafts / Antriebswellen / Alberi Entrata / Arbres D'entree / Ejes De Entrada

PL	EL C 28				EL C 42				EML 42				EML 1"3/8 Z6				EM 65				EM 1"3/8 Z6			
	LT	Z	L	Ød	LT	Z	L	Ød	LT	Z	L	Ød	LT	Z	L	Ød	LT	Z	L	Ød	LT	Z	L	Ød
300003	-				-				-				-				-				-			
300004	-				-				-				-				1137.5	121.5	105	65	1137.5	121.5	105	1"3/8
300005	1139.5	64	50	28	1139.5	64	82	42	1169.5	94	82	42	1169.5	94	106	1"3/8	1197				1197			

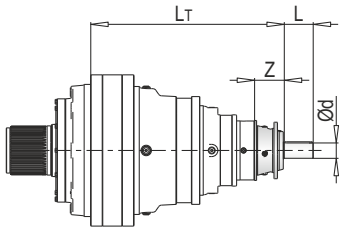

PL	EP 65				ET 90			
	LT	Z	L	Ød	LT	Z	L	Ød
300003	-				1093.5	171.5	170	90
300004	1169	153	105	65	-			
300005	1228.5				-			

PL	~ Kg							
	EL C 28	EL C 42	EML 42	EML 1"3/8 Z6	EM 65	EM 1"3/8 Z6	EP 65	ET 90
300003	-	-	-	-	-	-	-	2440
300004	-	-	-	-	2429	2429	2438	-
300005	2454	2454	2457	2457	2465	2465	2474	-

PL 300000 MS - Sonsuz Dişlili Redüktör Adaptörleri (PMRV/PRV) / Worm Gearbox Adaptors (PMRV/PRV) / Anschluss Für Schneckengetriebe (PMRV/PRV) / Predisposizioni Per Riduttori A Vite Senza Fine (PMRV/PRV) / Adaptation Pour Reducteurs A Vis Sans Fin (PMRV/PRV) / Acoplamiento Para Reductores De Tornillo Sin Fin (PMRV/PRV)

PL	PMRV/PRV 050					PMRV/PRV 063					PMRV/PRV 075				
	LM	l	h	MA	G	LM	l	h	MA	G	LM	l	h	MA	G
300004	-					-					-				
300005	1197	50	110	60	80	1206.5	63	113	72	95	1185.5	75	161	86	112.5

PL	PMRV/PRV 090					PMRV/PRV 110					PMRV/PRV 130				
	LM	l	h	MA	G	LM	l	h	MA	G	LM	l	h	MA	G
300004	-					1150	110	237.5	127.5	160	1155.5	130	277.5	147.5	180
300005	1195.5	90	193	103	129.5	1209.5					1215				

PL	PMRV/PRV 150				
	LM	l	h	MA	G
300004	1172	150	320	170	210
300005	1231.5				

PL	PMRV/PRV ~ Kg						
	050	063	075	090	110	130	150
300004	-	-	-	-	2264	2465	2511
300005	2456	2459.5	2462	2467	2494	2511	2547

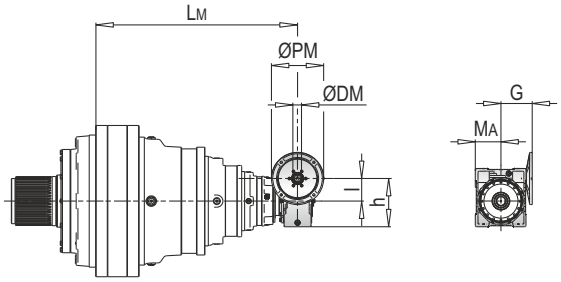

ØPM
ØDM
105

PLB 300000 MS - Elektrik Motor Adaptörleri (IEC) / Electric Motor Couplings (IEC) / Anbauvorrichtung Für Elektromotore (IEC) / Predisposizioni Per Motori Elettrici (IEC) / Adaptations Pour Moteurs Electriques (IEC) / Acoplamientos Para Motores Eléctricos (IEC)

PLB	IEC 80				IEC 90				IEC 100				IEC 112				IEC 132			
	A	LT	Z	ØD	A	LT	Z	ØD	A	LT	Z	ØD	A	LT	Z	ØD	A	LT	Z	ØD
300004	-				-				-				-				-			
300005	1138	296	56	200	1138	296	56	200	1138	306	66	250	1138	306	66	250	1138	340	100	300

PLB	IEC 160				IEC 180				IEC 200				IEC 225				IEC 250			
	A	LT	Z	ØD	A	LT	Z	ØD	A	LT	Z	ØD	A	LT	Z	ØD	A	LT	Z	ØD
300004	1028	433	118	350	1028	433	118	350	1028	463	148	400	1028	451	139	450	1028	463.5	148.5	550
300005	1138	379	139		1138	379	139		-				-				-			

PLB	IEC ~ Kg									
	80	90	100	112	132	160	180	200	225	250
300004	-	-	-	-	-	2525	2525	2540	2545	2586
300005	2535	2535	2536	2536	2540	2550	2550	-	-	-

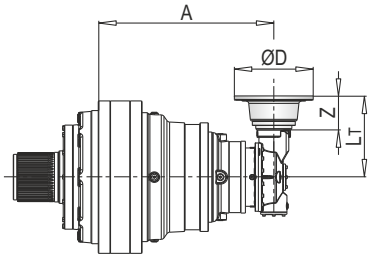

103

PLB 300000 MS - Giriş Milleri / Input Shafts / Antriebswellen / Alberi Entrata / Arbres D'entree / Ejes De Entrada

PLB	EL C 28					EL C 42					EML 42					EML 1"3/8 Z6					EM 65				
	A	LT	Z	L	Ød	A	LT	Z	L	Ød	A	LT	Z	L	Ød	A	LT	Z	L	Ød	A	LT	Z	L	Ød
300004	-					-					-					-					1028	436.5	121.5	105	65
300005	1138	304	64	50	28	1138	304	64	82	42	1138	334	94	82	42	1138	334	106	82	1"3/8	1138	361.5			

PLB	EM 1"3/8 Z6					EP 65				
	A	LT	Z	L	Ød	A	LT	Z	L	Ød
300004	1028	436.5	121.5	105	1"3/8	1028	468	153	105	65
300005	1138	361.5				1138	393			

PLB	~ Kg						
	EL C 28	EL C 42	EML 42	EML 1"3/8 Z6	EM 65	EM 1"3/8 Z6	EP 65
300004	-	-	-	-	2525	2525	2534
300005	2534	2534	2537	2537	2545	2545	2554

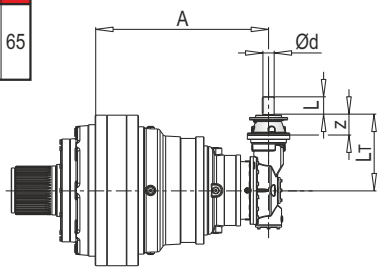

Ød
88-90

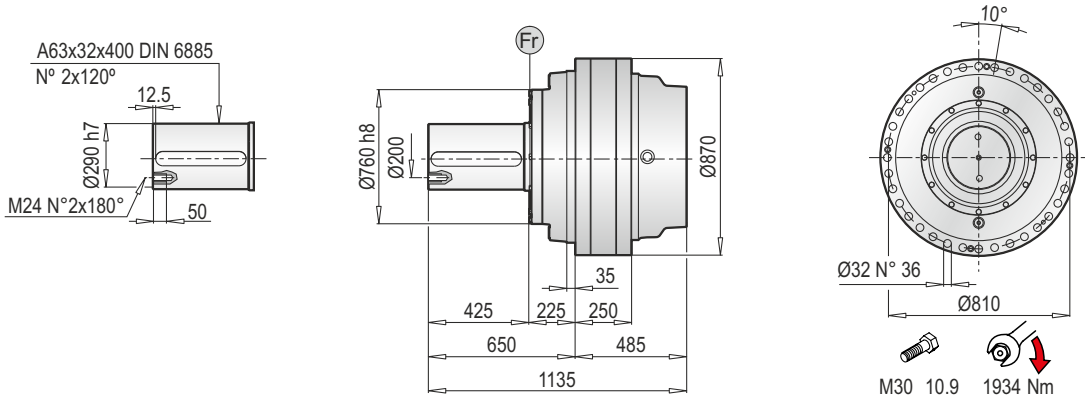

PL 300000 MC - Elektrik Motor Adaptörleri (IEC) / Electrıc Motor Couplings (IEC) / Anbauvorrichtung Für Elektromotore (IEC) / Predisposizioni Per Motori Elettrici (IEC) / Adaptations Pour Moteurs Electriques (IEC) / Acoplamientos Para Motores Eléctricos (IEC)

PL	IEC 63			IEC 71			IEC 80			IEC 90			IEC 100			IEC 112			IEC 132		
	LT	Z	ØD	LT	Z	ØD	LT	Z	ØD	LT	Z	ØD	LT	Z	ØD	LT	Z	ØD	LT	Z	ØD
300001	-			-			-			-			-			-			-		
300002	-			-			-			-			-			-			-		
300003	-			-			-			-			-			-			-		
300004	-			-			-			-			-			-			-		
300005	1111.5	36	140	1111.5	36	160	1131.5	56	200	1131.5	56	200	1141.5	66	250	1141.5	66	250	1175.5	100	300

PL	IEC 160			IEC 180			IEC 200			IEC 225			IEC 250			IEC 280		
	LT	Z	ØD	LT	Z	ØD	LT	Z	ØD	LT	Z	ØD	LT	Z	ØD	LT	Z	ØD
300001	635	150	350	635	150	350	635	150	400	624	139	450	624	139	550	624	139	550
300002	890			890			890			879			879			879		
300003	1072			1072			1072			1061			1061			1061		
300004	1134	118		1134	118		1164	148		1155			1164.5	148.5		-		
300005	1214.5	139		1214.5	139		-			-			-			-		

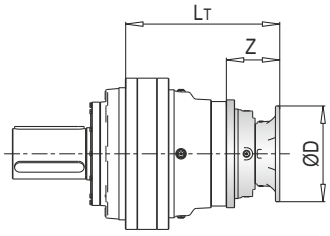

PL	IEC ~ Kg												
	63	71	80	90	100	112	132	160	180	200	225	250	280
300001	-	-	-	-	-	-	-	1955	1955	1960	1966	1978	1990
300002	-	-	-	-	-	-	-	2263	2263	2268	2274	2286	2298
300003	-	-	-	-	-	-	-	2437	2437	2442	2468	2460	2472
300004	-	-	-	-	-	-	-	2434	2434	2444	2449	2490	-
300005	2453	2453	2455	2455	2456	2456	2460	2470	2470	-	-	-	-

PL 300000 MC - Giriş Milleri / Input Shafts / Antriebswellen / Alberi Entrata / Arbres D'entree / Ejes De Entrada

PL	EL C 28				EL C 42				EML 42				EML 1"3/8 Z6				EM 65				EM 1"3/8 Z6			
	LT	Z	L	Ød	LT	Z	L	Ød	LT	Z	L	Ød	LT	Z	L	Ød	LT	Z	L	Ød	LT	Z	L	Ød
300003	-				-				-				-				-				-			
300004	-				-				-				-				1137.5	121.5	105	65	1137.5	121.5	105	1"3/8
300005	1139.5	64	50	28	1139.5	64	82	42	1169.5	94	82	42	1169.5	94	106	1"3/8	1197				1197			

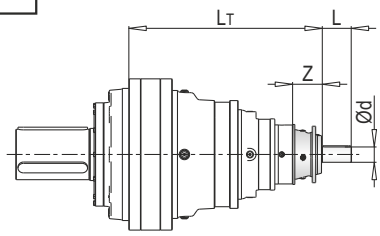

PL	EP 65				ET 90			
	LT	Z	L	Ød	LT	Z	L	Ød
300003	-				1093.5	171.5	170	90
300004	1169	153	105	65	-			
300005	1228.5				-			

PL	~ Kg							
	EL C 28	EL C 42	EML 42	EML 1"3/8 Z6	EM 65	EM 1"3/8 Z6	EP 65	ET 90
300003	-	-	-	-	-	-	-	2440
300004	-	-	-	-	2429	2429	2438	-
300005	2454	2454	2457	2457	2465	2465	2474	-

PL 300000 MC - Sonsuz Dişlili Redüktör Adaptörleri (PMRV/PRV) / Worm Gearbox Adaptors (PMRV/PRV) / Anschluss Für Schneckengetriebe (PMRV/PRV) / Predisposizioni Per Riduttori A Vite Senza Fine (PMRV/PRV) / Adaptation Pour Reducteurs A Vis Sans Fin (PMRV/PRV) / Acoplamiento Para Reductores De Tornillo Sin Fin (PMRV/PRV)

PL	PMRV/PRV 050					PMRV/PRV 063					PMRV/PRV 075				
	LM	l	h	MA	G	LM	l	h	MA	G	LM	l	h	MA	G
300004	-					-					-				
300005	1197	50	110	60	80	1206.5	63	113	72	95	1185.5	75	161	86	112.5

PL	PMRV/PRV 090					PMRV/PRV 110					PMRV/PRV 130				
	LM	l	h	MA	G	LM	l	h	MA	G	LM	l	h	MA	G
300004	-					1150	110	237.5	127.5	160	1155.5	130	277.5	147.5	180
300005	1195.5	90	193	103	129.5	1209.5					1215				

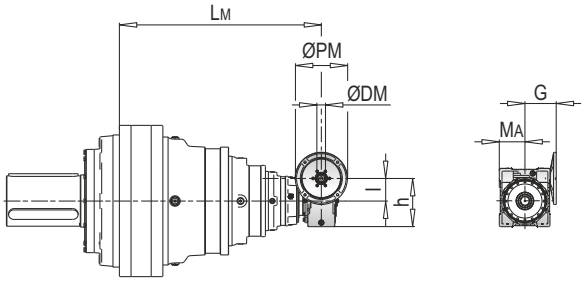

PL	PMRV/PRV 150				
	LM	l	h	MA	G
300004	1172	150	320	170	210
300005	1231.5				

PL	PMRV/PRV ~ Kg						
	050	063	075	090	110	130	150
300004	-	-	-	-	2264	2465	2511
300005	2456	2459.5	2462	2467	2494	2511	2547

ØPM
ØDM
105

PLB 300000 MC - Elektrik Motor Adaptörleri (IEC) / Electric Motor Couplings (IEC) / Anbauvorrichtung Für Elektromotore (IEC) / Predisposizioni Per Motori Elettrici (IEC) / Adaptations Pour Moteurs Electriques (IEC) / Acoplamientos Para Motores Eléctricos (IEC)

PLB	IEC 80				IEC 90				IEC 100				IEC 112				IEC 132			
	A	LT	Z	ØD	A	LT	Z	ØD	A	LT	Z	ØD	A	LT	Z	ØD	A	LT	Z	ØD
300004	-				-				-				-				-			
300005	1138	296	56	200	1138	296	56	200	1138	306	66	250	1138	306	66	250	1138	340	100	300

PLB	IEC 160				IEC 180				IEC 200				IEC 225				IEC 250			
	A	LT	Z	ØD	A	LT	Z	ØD	A	LT	Z	ØD	A	LT	Z	ØD	A	LT	Z	ØD
300004	1028	433	118	350	1028	433	118	350	1028	463	148	400	1028	451	139	450	1028	463.5	148.5	550
300005	1138	379	139		1138	379	139		-				-				-			

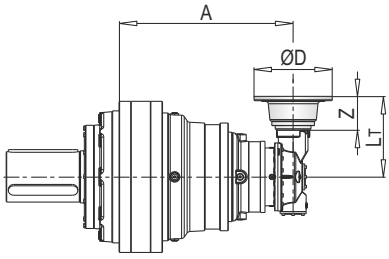

PLB	IEC ~ Kg									
	80	90	100	112	132	160	180	200	225	250
300004	-	-	-	-	-	2525	2525	2540	2545	2586
300005	2535	2535	2536	2536	2540	2550	2550	-	-	-

103

PLB 300000 MC - Giriş Milleri / Input Shafts / Antriebswellen / Alberi Entrata / Arbres D'entree / Ejes De Entrada

PLB	EL C 28					EL C 42					EML 42					EML 1"3/8 Z6					EM 65				
	A	LT	Z	L	Ød	A	LT	Z	L	Ød	A	LT	Z	L	Ød	A	LT	Z	L	Ød	A	LT	Z	L	Ød
300004	-					-					-					-					1028	436.5	121.5	105	65
300005	1138	304	64	50	28	1138	304	64	82	42	1138	334	94	82	42	1138	334	106	82	1"3/8	1138	361.5			

PLB	EM 1"3/8 Z6					EP 65				
	A	LT	Z	L	Ød	A	LT	Z	L	Ød
300004	1028	436.5	121.5	105	1"3/8	1028	468	153	105	65
300005	1138	361.5				1138	393			

PLB	~ Kg						
	EL C 28	EL C 42	EML 42	EML 1"3/8 Z6	EM 65	EM 1"3/8 Z6	EP 65
300004	-	-	-	-	2525	2525	2534
300005	2534	2534	2537	2537	2545	2545	2554

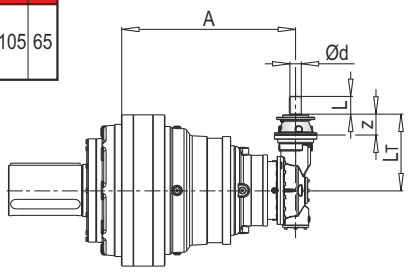

Ød
88-90

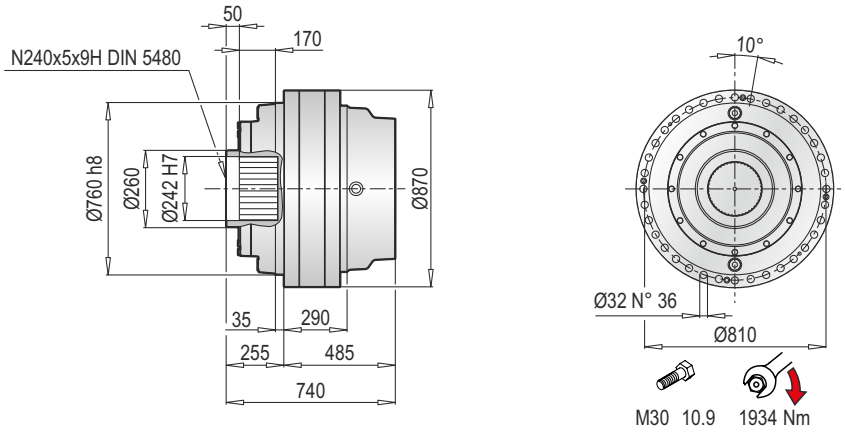

PL 300000 F - Elektrik Motor Adaptörleri (IEC) / Electric Motor Couplings (IEC) /Anbauvorrichtung Für Elektromotore (IEC) / Predisposizioni Per Motori Elettrici (IEC) / Adaptations Pour Moteurs Electriques (IEC) /Acoplamientos Para Motores Eléctricos (IEC)

PL	IEC 63			IEC 71			IEC 80			IEC 90			IEC 100			IEC 112			IEC 132		
	LT	Z	ØD	LT	Z	ØD	LT	Z	ØD	LT	Z	ØD	LT	Z	ØD	LT	Z	ØD	LT	Z	ØD
300001	-			-			-			-			-			-			-		
300002	-			-			-			-			-			-			-		
300003	-			-			-			-			-			-			-		
300004	-			-			-			-			-			-			-		
300005	1111.5	36	140	1111.5	36	160	1131.5	56	200	1131.5	56	200	1141.5	66	250	1141.5	66	250	1175.5	100	300

PL	IEC 160			IEC 180			IEC 200			IEC 225			IEC 250			IEC 280		
	LT	Z	ØD	LT	Z	ØD	LT	Z	ØD	LT	Z	ØD	LT	Z	ØD	LT	Z	ØD
300001	635	150	350	635	150	350	635	150	400	624	139	450	624	139	550	624	139	550
300002	890			890			890			879			879			879		
300003	1072			1072			1072			1061			1061			1061		
300004	1134	118		1134	118		1164	148		1155			1164.5	148.5		-		
300005	1214.5	139		1214.5	139		-			-			-			-		

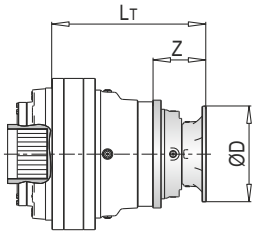

PL	IEC ~ Kg												
	63	71	80	90	100	112	132	160	180	200	225	250	280
300001	-	-	-	-	-	-	-	1805	1805	1810	1816	1828	1840
300002	-	-	-	-	-	-	-	2113	2113	2118	2124	2136	2148
300003	-	-	-	-	-	-	-	2287	2287	2292	2298	2310	2322
300004	-	-	-	-	-	-	-	2284	2284	2294	2318	2340	-
300005	2303	2303	2305	2305	2306	2306	2310	2320	2320	-	-	-	-

PL 300000 F - Giriş Milleri / Input Shafts / Antriebswellen / Alberi Entrata / Arbres D'entree / Ejes De Entrada

PL	EL C 28				EL C 42				EML 42				EML 1"3/8 Z6				EM 65				EM 1"3/8 Z6			
	LT	Z	L	Ød	LT	Z	L	Ød	LT	Z	L	Ød	LT	Z	L	Ød	LT	Z	L	Ød	LT	Z	L	Ød
300003	-				-				-				-				-				-			
300004	-				-				-				-				1137.5	121.5	105	65	1137.5	121.5	105	1"3/8
300005	1139.5	64	50	28	1139.5	64	82	42	1169.5	94	82	42	1169.5	94	106	1"3/8	1197				1197			

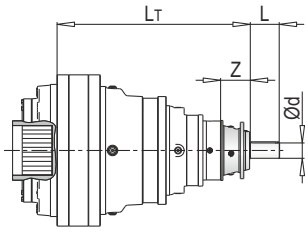

PL	EP 65				ET 90			
	LT	Z	L	Ød	LT	Z	L	Ød
300003	-				1093.5	171.5	170	90
300004	1169	153	105	65	-			
300005	1228.5				-			

PL	~ Kg							
	EL C 28	EL C 42	EML 42	EML 1"3/8 Z6	EM 65	EM 1"3/8 Z6	EP 65	ET 90
300003	-	-	-	-	-	-	-	2290
300004	-	-	-	-	2279	2279	2288	-
300005	2304	2304	2307	2307	2315	2465	2324	-

PL 300000 F - Sonsuz Dişlili Redüktör Adaptörleri (PMRV/PRV) / Worm Gearbox Adaptors (PMRV/PRV) / Anschluss Für Schneckengetriebe (PMRV/PRV) / Predisposizioni Per Riduttori A Vite Senza Fine (PMRV/PRV) / Adaptation Pour Reducteurs A Vis Sans Fin (PMRV/PRV) / Acoplamiento Para Reductores De Tornillo Sin Fin (PMRV/PRV)

PL	PMRV/PRV 050					PMRV/PRV 063					PMRV/PRV 075				
	LM	l	h	MA	G	LM	l	h	MA	G	LM	l	h	MA	G
300004	-					-					-				
300005	1197	50	110	60	80	1206.5	63	113	72	95	1185.5	75	161	86	112.5

PL	PMRV/PRV 090					PMRV/PRV 110					PMRV/PRV 130				
	LM	l	h	MA	G	LM	l	h	MA	G	LM	l	h	MA	G
300004	-					1150	110	237.5	127.5	160	1155.5	130	277.5	147.5	180
300005	1195.5	90	193	103	129.5	1209.5					1215				

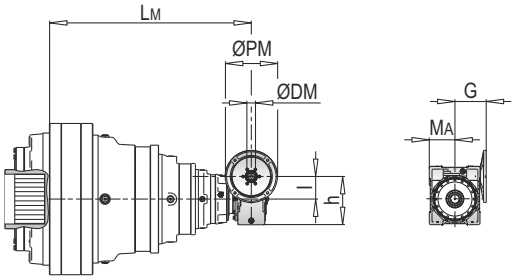

PL	PMRV/PRV 150				
	LM	l	h	MA	G
300004	1172	150	320	170	210
300005	1231.5				

PL	PMRV/PRV ~ Kg						
	050	063	075	090	110	130	150
300004	-	-	-	-	2114	2315	2361
300005	2306	2310	2312	2317	2344	2361	2397

ØPM
ØDM
105

PLB 300000 F - Elektrik Motor Adaptörleri (IEC) / Electric Motor Couplings (IEC) / Anbauvorrichtung Für Elektromotore (IEC) / Predisposizioni Per Motori Elettrici (IEC) / Adaptations Pour Moteurs Electriques (IEC) / Acoplamientos Para Motores Eléctricos (IEC)

PLB	IEC 80				IEC 90				IEC 100				IEC 112				IEC 132			
	A	LT	Z	ØD	A	LT	Z	ØD	A	LT	Z	ØD	A	LT	Z	ØD	A	LT	Z	ØD
300004	-				-				-				-				-			
300005	1138	296	56	200	1138	296	56	200	1138	306	66	250	1138	306	66	250	1138	340	100	300

PLB	IEC 160				IEC 180				IEC 200				IEC 225				IEC 250			
	A	LT	Z	ØD	A	LT	Z	ØD	A	LT	Z	ØD	A	LT	Z	ØD	A	LT	Z	ØD
300004	1028	433	118	350	1028	433	118	350	1028	463	148	400	1028	451	139	450	1028	463.5	148.5	550
300005	1138	379	139		1138	379	139		-				-				-			

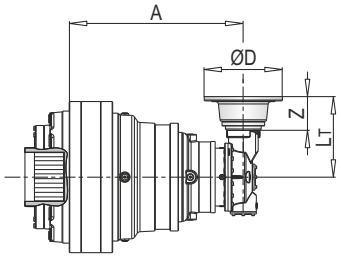

PLB	IEC ~ Kg									
	80	90	100	112	132	160	180	200	225	250
300004	-	-	-	-	-	2375	2375	2390	2395	2436
300005	2385	2385	2386	2386	2390	2400	2400	-	-	-

103

PLB 300000 F - Giriş Milleri / Input Shafts / Antriebswellen / Alberi Entrata / Arbres D'entree / Ejes De Entrada

PLB	EL C 28					EL C 42					EML 42					EML 1"3/8 Z6					EM 65				
	A	LT	Z	L	Ød	A	LT	Z	L	Ød	A	LT	Z	L	Ød	A	LT	Z	L	Ød	A	LT	Z	L	Ød
300004	-					-					-					-					1028	436.5	121.5	105	65
300005	1138	304	64	50	28	1138	304	64	82	42	1138	334	94	82	42	1138	334	106	82	1"3/8	1138	361.5			

PLB	EM 1"3/8 Z6					EP 65				
	A	LT	Z	L	Ød	A	LT	Z	L	Ød
300004	1028	436.5	121.5	105	1"3/8	1028	468	153	105	65
300005	1138	361.5				1138	393			

PLB	~ Kg						
	EL C 28	EL C 42	EML 42	EML 1"3/8 Z6	EM 65	EM 1"3/8 Z6	EP 65
300004	-	-	-	-	2375	2375	2384
300005	2384	2384	2387	2387	2395	2395	2404

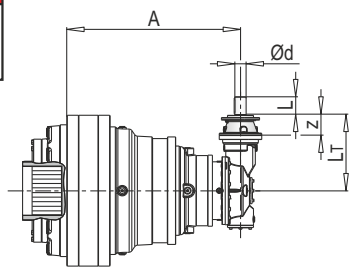

Ød
88-90

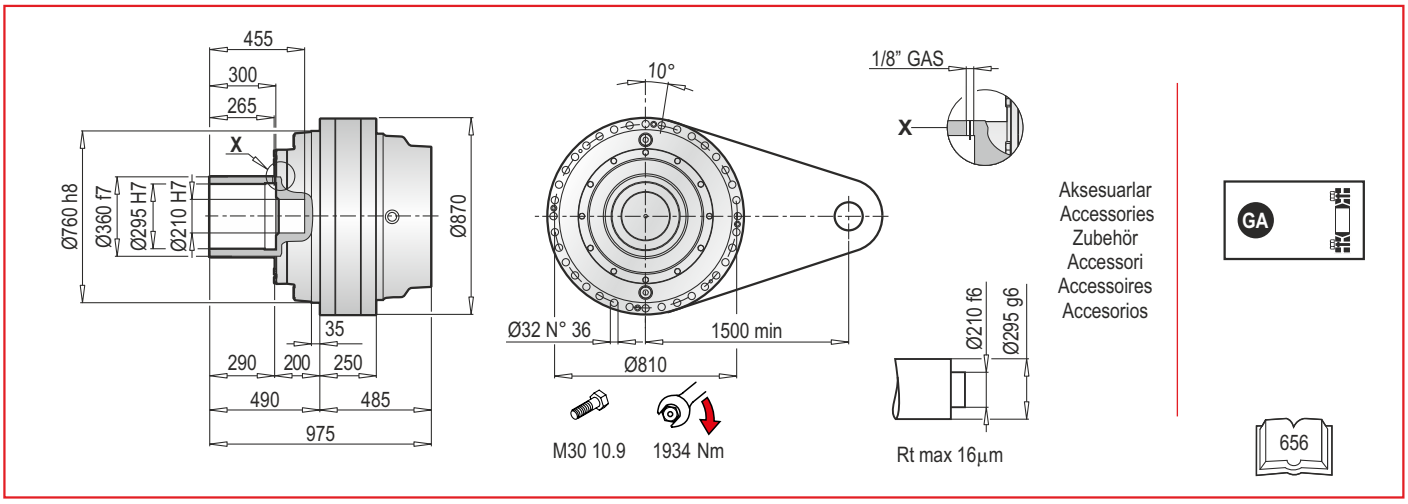

PL 300000 FS - Elektrik Motor Adaptörleri (IEC) / Electrıc Motor Couplings (IEC) / Anbauvorrichtung Für Elektromotore (IEC) / Predisposizioni Per Motori Elettrici (IEC) / Adaptations Pour Moteurs Electriques (IEC) / Acoplamientos Para Motores Eléctricos (IEC)

PL	IEC 63			IEC 71			IEC 80			IEC 90			IEC 100			IEC 112			IEC 132		
	LT	Z	ØD	LT	Z	ØD	LT	Z	ØD	LT	Z	ØD	LT	Z	ØD	LT	Z	ØD	LT	Z	ØD
300001	-			-			-			-			-			-			-		
300002	-			-			-			-			-			-			-		
300003	-			-			-			-			-			-			-		
300004	-			-			-			-			-			-			-		
300005	1111.5	36	140	1111.5	36	160	1131.5	56	200	1131.5	56	200	1141.5	66	250	1141.5	66	250	1175.5	100	300

PL	IEC 160			IEC 180			IEC 200			IEC 225			IEC 250			IEC 280		
	LT	Z	ØD	LT	Z	ØD	LT	Z	ØD	LT	Z	ØD	LT	Z	ØD	LT	Z	ØD
300001	635	150	350	635	150	350	635	150	400	624	139	450	624	139	550	624	139	550
300002	890			890			890			879			879			879		
300003	1072			1072			1072			1061			1061			1061		
300004	1134	118		1134	118		1164	148		1155			1164.5	148.5		-		
300005	1214.5	139		1214.5	139		-			-			-			-		

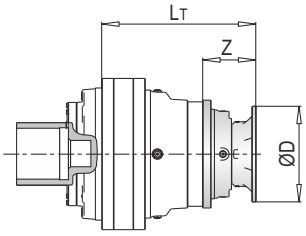

PL	IEC ~ Kg												
	63	71	80	90	100	112	132	160	180	200	225	250	280
300001	-	-	-	-	-	-	-	1913	1913	1918	1924	1936	1948
300002	-	-	-	-	-	-	-	2221	2221	2226	2232	2244	2256
300003	-	-	-	-	-	-	-	2395	2395	2400	2426	2418	2430
300004	-	-	-	-	-	-	-	2392	2392	2402	2407	2448	-
300005	2411	2411	2413	2413	2414	2414	2418	2428	2428	-	-	-	-

PL 300000 FS - Giriş Milleri / Input Shafts / Antriebswellen / Alberi Entrata / Arbres D'entree / Ejes De Entrada

PL	EL C 28				EL C 42				EML 42				EML 1"3/8 Z6				EM 65				EM 1"3/8 Z6			
	LT	Z	L	Ød	LT	Z	L	Ød	LT	Z	L	Ød	LT	Z	L	Ød	LT	Z	L	Ød	LT	Z	L	Ød
300003	-				-				-				-				-				-			
300004	-				-				-				-				1137.5	121.5	105	65	1137.5	121.5	105	1"3/8
300005	1139.5	64	50	28	1139.5	64	82	42	1169.5	94	82	42	1169.5	94	106	1"3/8	1197				1197			

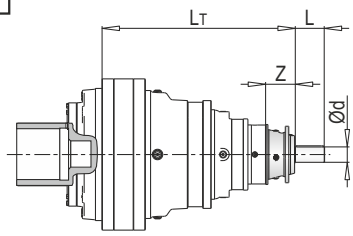

PL	EP 65				ET 90			
	LT	Z	L	Ød	LT	Z	L	Ød
300003	-				1093.5	171.5	170	90
300004	1169	153	105	65	-			
300005	1228.5				-			

PL	~ Kg							
	EL C 28	EL C 42	EML 42	EML 1"3/8 Z6	EM 65	EM 1"3/8 Z6	EP 65	ET 90
300003	-	-	-	-	-	-	-	2398
300004	-	-	-	-	2387	2387	2396	-
300005	2412	2412	2415	2415	2423	2423	2432	-

PL 300000 FS - Sonsuz Dişlili Redüktör Adaptörleri (PMRV/PRV) / Worm Gearbox Adaptors (PMRV/PRV) / Anschluss Für Schneckengetriebe (PMRV/PRV) / Predisposizioni Per Riduttori A Vite Senza Fine (PMRV/PRV) / Adaptation Pour Reducteurs A Vis Sans Fin (PMRV/PRV) / Acoplamiento Para Reductores De Tornillo Sin Fin (PMRV/PRV)

PL	PMRV/PRV 050					PMRV/PRV 063					PMRV/PRV 075				
	LM	l	h	MA	G	LM	l	h	MA	G	LM	l	h	MA	G
300004	-					-					-				
300005	1197	50	110	60	80	1206.5	63	113	72	95	1185.5	75	161	86	112.5

PL	PMRV/PRV 090					PMRV/PRV 110					PMRV/PRV 130				
	LM	l	h	MA	G	LM	l	h	MA	G	LM	l	h	MA	G
300004	-					1150	110	237.5	127.5	160	1155.5	130	277.5	147.5	180
300005	1195.5	90	193	103	129.5	1209.5					1215				

PL	PMRV/PRV 150				
	LM	l	h	MA	G
300004	1172	150	320	170	210
300005	1231.5				

PL	PMRV/PRV ~ Kg						
	050	063	075	090	110	130	150
300004	-	-	-	-	2222	2423	2469
300005	2414	2418	2420	2425	2452	2469	2505

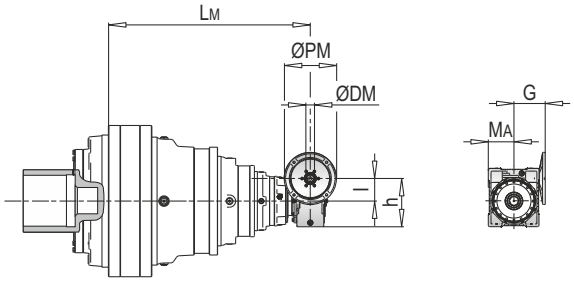

ØPM
ØDM
105

PLB 300000 FS - Elektrik Motor Adaptörleri (IEC) / Electric Motor Couplings (IEC) / Anbauvorrichtung Für Elektromotore (IEC) / Predisposizioni Per Motori Elettrici (IEC) / Adaptations Pour Moteurs Electriques (IEC) / Acoplamientos Para Motores Eléctricos (IEC)

PLB	IEC 80				IEC 90				IEC 100				IEC 112				IEC 132			
	A	LT	Z	ØD	A	LT	Z	ØD	A	LT	Z	ØD	A	LT	Z	ØD	A	LT	Z	ØD
300004	-				-				-				-				-			
300005	1138	296	56	200	1138	296	56	200	1138	306	66	250	1138	306	66	250	1138	340	100	300

PLB	IEC 160				IEC 180				IEC 200				IEC 225				IEC 250			
	A	LT	Z	ØD	A	LT	Z	ØD	A	LT	Z	ØD	A	LT	Z	ØD	A	LT	Z	ØD
300004	1028	433	118	350	1028	433	118	350	1028	463	148	400	1028	451	139	450	1028	463.5	148.5	550
300005	1138	379	139		1138	379	139		-				-				-			

PLB	IEC ~ Kg									
	80	90	100	112	132	160	180	200	225	250
300004	-	-	-	-	-	2483	2483	2498	2503	2544
300005	2535	2535	2536	2536	2540	2508	2508	-	-	-

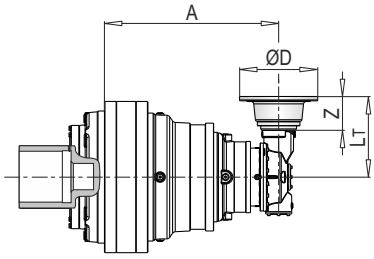

103

PLB 300000 FS - Giriş Milleri / Input Shafts / Antriebswellen / Alberi Entrata / Arbres D'entree / Ejes De Entrada

PLB	EL C 28					EL C 42					EML 42					EML 1"3/8 Z6					EM 65				
	A	LT	Z	L	Ød	A	LT	Z	L	Ød	A	LT	Z	L	Ød	A	LT	Z	L	Ød	A	LT	Z	L	Ød
300004	-					-					-					-					1028	436.5	121.5	105	65
300005	1138	304	64	50	28	1138	304	64	82	42	1138	334	94	82	42	1138	334	106	82	1"3/8	1138	361.5			

PLB	EM 1"3/8 Z6					EP 65				
	A	LT	Z	L	Ød	A	LT	Z	L	Ød
300004	1028	436.5	121.5	105	1"3/8	1028	468	153	105	65
300005	1138	361.5				1138	393			

PLB	~ Kg						
	EL C 28	EL C 42	EML 42	EML 1"3/8 Z6	EM 65	EM 1"3/8 Z6	EP 65
300004	-	-	-	-	2483	2483	2492
300005	2492	2492	2495	2495	2503	2503	2512

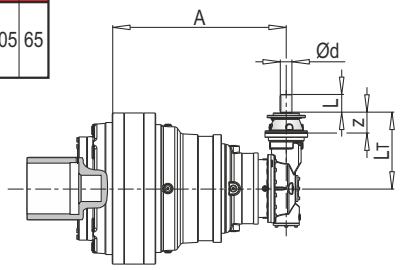

Ød
88-90

AKSESUARLAR / ACCESSORIES / ZUBEHÖR / ACCESSORI / ACCESSOIRES / ACCESORIOS

GA

Konik sıktırma / Shrink disc / Schrumpfscheibe
Giunto di attrito / Frette de serrage / Disco de contracción

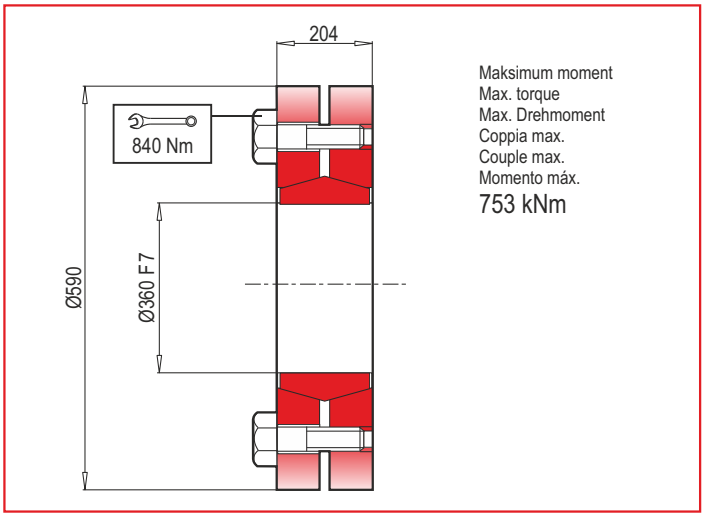

TR RADYAL YÜKLER (Fr)

Aşağıdaki grafikler istenilen $n_2$xh değerinin elde edilmesi için gerekli olan radyal yükleri ve K faktörlerini göstermektedir.

EN RADIAL LOADS (Fr)

The following curves show the radial loads and the K factors to obtain the required n2xh value.

DE RADIALLAST (Fr)

In den nachstehenden Diagrammen ist die Radiallast un der Koeffizient K dargestellt und kann mit dem gewünschten Wert $n_2$xh verglichen werden.

IT CARICHI RADIALI (Fr)

Nei diagrammi seguenti sono riportati i carichi radiali e i coefficienti K per rapportarli al valore $n_2$xh desiderato.

FR CHARGES RADIALES (Fr)

Dans les diagrammes suivants sont indiqués les charges radiales et les facteurs K de façon à obtenir la valeur $n_2$xh désirée.

ES CARGAS RADIALES (Fr)

En los siguientes diagramas se indican las cargas radiales y los coefici - entes K para obtener el valor requerido $n_2$xh.

M

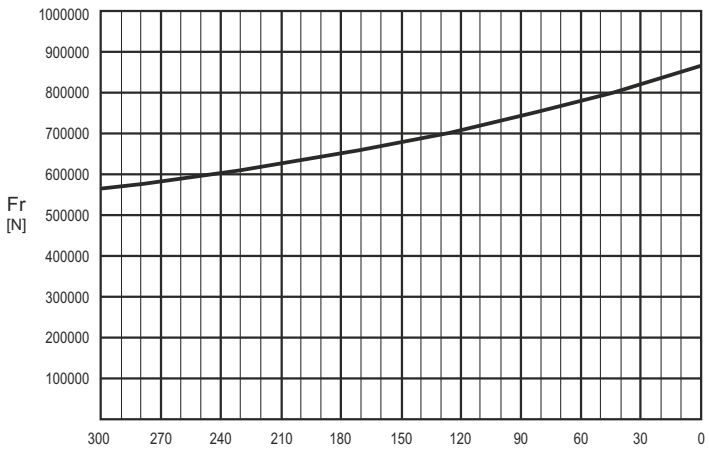

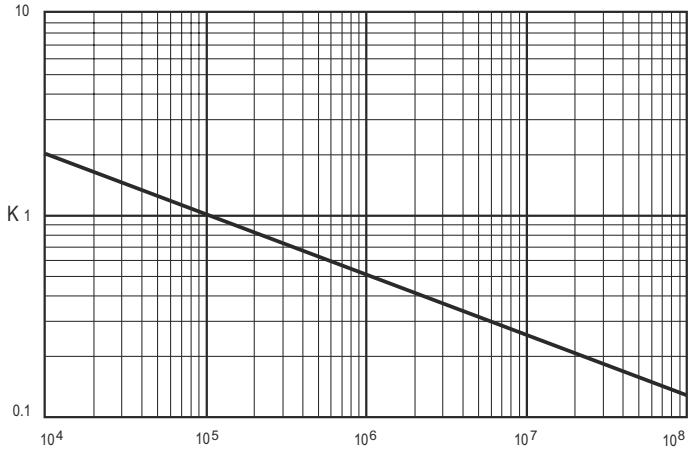

	$n_2$xh				
	10^5	10^4	10^6	10^7	10^8
M	Fr	Fr • K			

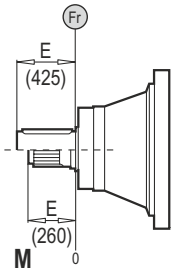

TR EKSENEL YÜKLER (Fa)

Tabloda yer alan eksenel yük değerleri, çıkış tipine ve uygulamanın yük yönüne göre değişir.

EN AXIAL LOADS (Fa)

The values of the axial loads in the table refer to the output versions and load direction of application.

DE AXIALLAST (Fa)

Die dargestellten Werte der Axiallast basieren auf der Version und der applizierten Lastrichtung.

IT CARICHI ASSIALI (Fa)

I valori dei carichi assiali indicati in tabella sono riferiti alle versioni e alla direzione di applicazione del carico.

FR CHARGES AXIALES (Fa)

Les valeurs des charges axiales indiquées dans le tableau se réfèrent aux versions et à la direction d'application de lacharge.

ES CARGAS AXIALES (Fa)

Los valores de las cargas axiales indicados en la tabla se refieren a las versiones y a la dirección de aplicación de la carga.

Fa [N]	M	
	240000	←
	160500	→

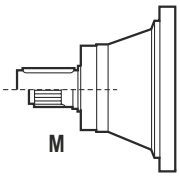

TEKNİK VERİLER / TECHNICAL DATA / TECHNISCHE DATEN / DATI TECNICI / DONNÉES TECHNIQUES / DATOS TÉCNICAS

	i_{ges}	Mmax (n_2 x h: 20000) (Nm)
380001	3.43 ... 5.25	692600
380002	14.03 ... 32.71	692600
380003	56.11 ... 182.65	550000
380004	237.91 ... 1038.94	544200
380005	1153.68 ... 8938.38	518500

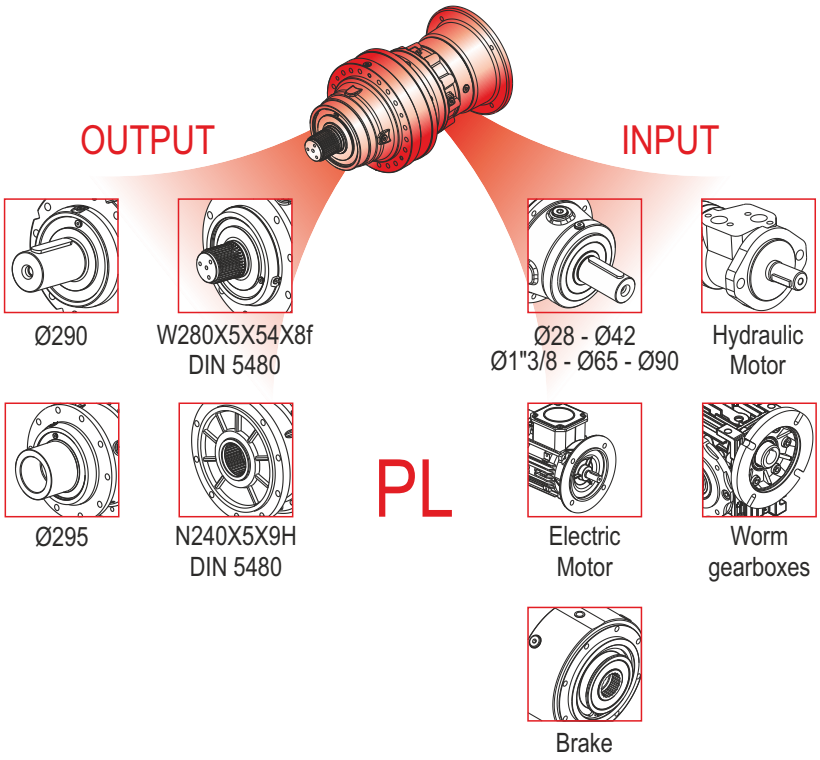

	i_{ges}	Mmax (n_2 x h: 20000) (Nm)
380005	925.43 ... 6279.06	518500

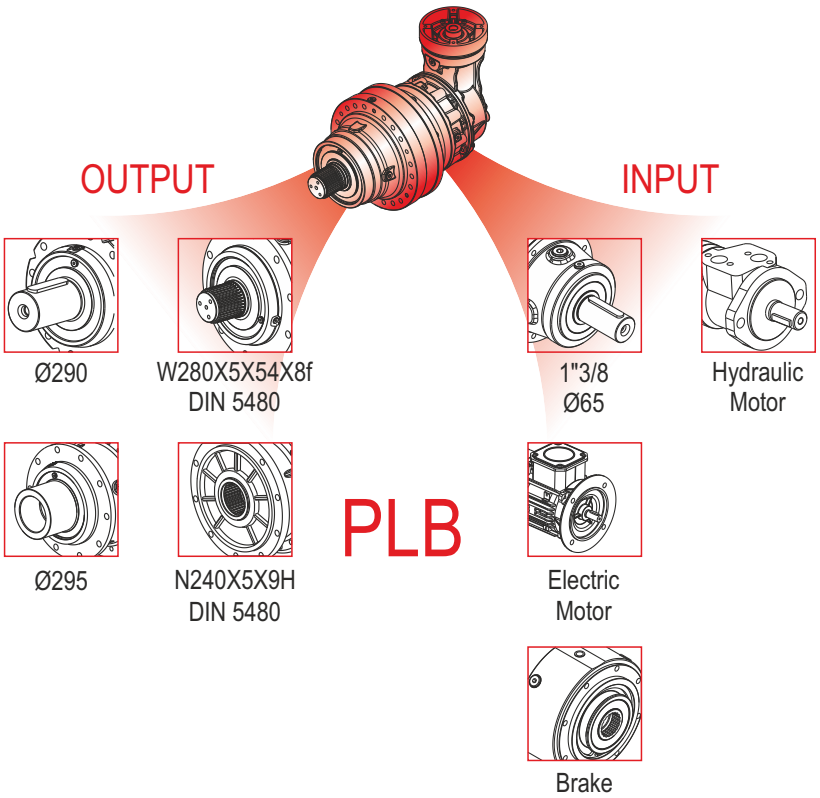

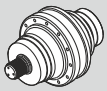	Pt [kW]	n_{1max} [min^{-1}]	i_{ges}	Mc [kNm] n_2 x h 10.000	n_2 x h 20.000	n_2 x h 50.000	n_2 x h 100.000	Giriş- Input - Antrieb - Entrata - Entrée - Entrada IEC (B5)	PMRV / PRV	EL - EML EM - EP - ET
PL 380001	224	200	3.43 4.09 5.25	435.4 512.8 383.9	392.1 461.8 345.7	341.4 402.0 300.9	307.4 343.5 282.0	160 | 200 | 250 180 | 225 | 280	-	-
PL 380002	130	750	14.03 16.73 18.01 21.47 27.56 32.71	435.4 512.8 380.0 441.5 383.9 383.9	392.1 461.8 342.1 397.5 345.7 345.7	341.4 402.0 297.8 346.1 300.9 300.9	307.4 343.5 279.2 324.4 282.0 282.0	160 180 200 225 250 280	-	-
PL 380003	75	1500	56.11 66.91 72.03 85.89 110.25 129.71 153.92 182.65	358.3 414.2 380.0 383.9 383.9 383.9 297.0 297.0	317.1 366.7 342.1 345.7 345.7 345.7 267.4 267.4	269.9 312.0 297.8 300.9 300.9 300.9 232.9 232.9	238.9 276.2 279.2 282.0 282.0 282.0 222.6 222.6	160 180 200 225 250 280	-	ET 90
PL 380004	68	2800	237.91 256.11 305.39 392.00 433.06 472.50 555.88 617.40 726.35 744.19 875.51 1038.94	410.0 380.0 383.9 383.9 383.9 383.9 383.9 383.9 383.9 315.7 360.9 297.0	362.8 342.1 345.7 345.7 345.7 345.7 345.7 345.7 345.7 279.4 319.4 267.4	308.8 297.8 300.9 300.9 300.9 300.9 300.9 300.9 300.9 237.7 271.7 232.9	273.4 279.2 282.0 282.0 282.0 282.0 282.0 275.7 282.0 210.3 240.4 222.6	160 180 200 225 250	110 130 150	EM 65 EM 1"3/8 Z6 EP 65
PL 380005	55	2800	1153.68 1259.72 1390.60 1518.41 1577.83 1679.37 1742.22 1832.32 1949.06 2025.33 2100.00 2293.01 2382.75 2546.78 2668.73 2767.06 2872.06 3611.50 4476.15 5253.09 6347.48 8938.38	383.9 383.9 383.9 383.9 383.9 353.0 383.9 380.5 383.9 383.9 383.9 383.9 383.9 383.9 347.2 383.9 383.9 360.9 383.9 360.9 360.9 297.0	345.7 345.7 345.7 345.7 345.7 312.5 345.7 337.0 345.7 345.7 345.7 345.7 345.7 345.7 307.2 345.7 345.7 319.4 345.7 319.4 319.4 267.4	300.9 300.9 300.9 300.9 300.9 265.9 300.9 286.6 300.9 300.9 300.9 300.9 300.9 300.9 261.3 300.9 300.9 271.7 300.9 271.7 271.7 232.9	282.0 282.0 282.0 282.0 282.0 235.3 282.0 254.3 282.0 282.0 282.0 282.0 282.0 275.7 231.8 282.0 282.0 240.4 275.7 240.4 240.4 222.6	63 71 80 90 100 112 132 160 180	050 063 075 090 110 130 150	EL C 28 EL C 42 EML 42 EML 1"3/8 Z6 EM 65 EM 1"3/8 Z6 EP 65

	Pt [kW]	n_{1max} [min^{-1}]	i_{ges}	Mc [kNm]				Giriş- Input - Antrieb - Entrata - Entrée - Entrada	
				n_2 x h	n_2 x h	n_2 x h	n_2 x h		
				10.000	20.000	50.000	100.000	IEC (B5)	EL - EML EM - EP - ET
PLB 380005	52	2500	925.43	375.2	332.0	282.5	250.1	80 90 100 112 132 160 180	EM 65 EM 1"3/8 Z6 EP 65
			1103.50	383.9	345.7	300.9	282.0		
			1204.00	383.9	345.7	300.9	282.0		
			1330.11	383.9	345.7	300.9	282.0		
			1451.25	383.9	345.7	300.9	282.0		
			1574.41	353.0	312.5	265.9	235.3		
			1676.63	383.9	345.7	300.9	282.0		
			1738.01	383.9	340.5	289.6	256.6		
			1829.33	383.9	345.7	300.9	282.0		
			1896.30	383.9	345.7	300.9	275.7		
			2020.94	383.9	345.7	300.9	282.0		
			2152.16	383.9	345.7	300.9	282.0		
			2230.94	383.9	345.7	300.9	282.0		
			2485.97	297.0	267.4	232.9	222.6		
			2594.12	383.9	345.7	300.9	282.0		
			2881.20	383.9	345.7	300.9	275.7		
			3389.65	383.9	345.7	300.9	282.0		
			4085.74	360.9	319.4	271.7	240.4		
			5753.44	297.0	267.4	232.9	222.6		
			6279.06	296.0	262.1	223.0	197.4		

⚠

(n_2 x h = 20.000)

$$M_{max} = M_C \times 1.5$$

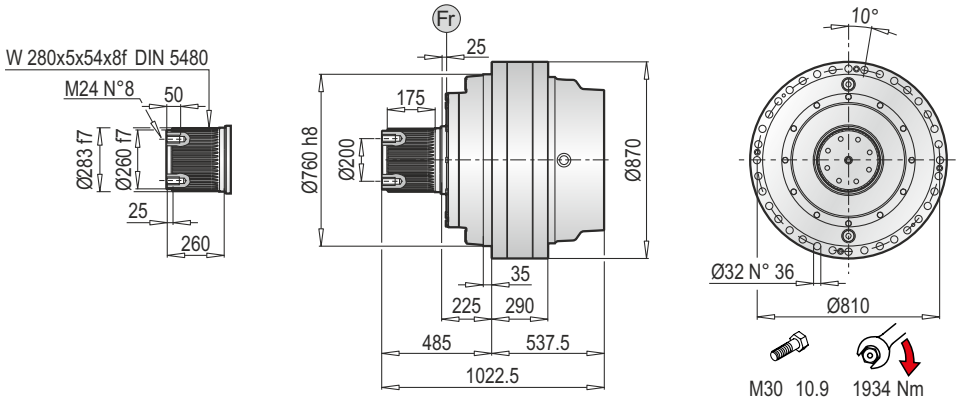

PL 380000 MS - Elektrik Motor Adaptörleri (IEC) / Electrıc Motor Couplings (IEC) / Anbauvorrichtung Für Elektromotore (IEC) / Predisposizioni Per Motori Elettrici (IEC) / Adaptations Pour Moteurs Electriques (IEC) / Acoplamientos Para Motores Eléctricos (IEC)

PL	IEC 63			IEC 71			IEC 80			IEC 90			IEC 100			IEC 112			IEC 132		
	LT	Z	ØD	LT	Z	ØD	LT	Z	ØD	LT	Z	ØD	LT	Z	ØD	LT	Z	ØD	LT	Z	ØD
380001	-			-			-			-			-			-			-		
380002	-			-			-			-			-			-			-		
380003	-			-			-			-			-			-			-		
380004	-			-			-			-			-			-			-		
380005	1197.5	36	140	1197.5	36	160	1217.5	56	200	1217.5	56	200	1227.5	66	250	1227.5	66	250	1261.5	100	300

PL	IEC 160			IEC 180			IEC 200			IEC 225			IEC 250			IEC 280		
	LT	Z	ØD	LT	Z	ØD	LT	Z	ØD	LT	Z	ØD	LT	Z	ØD	LT	Z	ØD
380001	687	150	350	687	150	350	687	150	400	676.5	139	450	676.5	139	550	676.5	139	550
380002	956			956			956			945			945			945		
380003	1156			1156			1156			1142			1142			1142		
380004	1208	118		1208	118		1238	148		1229			1238.5	148.5		-	-	-
380005	1300.5	139		1300.5	139		-	-	-	-	-	-	-	-	-	-	-	-

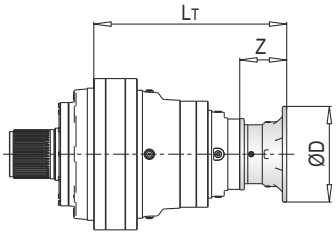

PL	IEC ~ Kg												
	63	71	80	90	100	112	132	160	180	200	225	250	280
380001	-	-	-	-	-	-	-	2085	2085	2090	2096	2108	2120
380002	-	-	-	-	-	-	-	2455	2455	2460	2466	2478	2490
380003	-	-	-	-	-	-	-	2567	2567	2572	2578	2590	2602
380004	-	-	-	-	-	-	-	2579	2579	2589	2564	2635	-
380005	2577	2577	2579	2579	2580	2580	2584	2594	2594	-	-	-	-

PL 380000 MS - Giriş Milleri / Input Shafts / Antriebswellen / Alberi Entrata / Arbres D'entree / Ejes De Entrada

PL	EL C 28				EL C 42				EML 42				EML 1"3/8 Z6				EM 65				EM 1"3/8 Z6			
	LT	Z	L	Ød	LT	Z	L	Ød	LT	Z	L	Ød	LT	Z	L	Ød	LT	Z	L	Ød	LT	Z	L	Ød
380003	-				-				-				-				-				-			
380004	-				-				-				-				1211.5	121.5	105	65	121.5	121.5	105	1"3/8
380005	1225.5	64	50	28	1225.5	64	82	42	1255.5	94	82	42	1255.5	94	106	1"3/8	1283				1283			

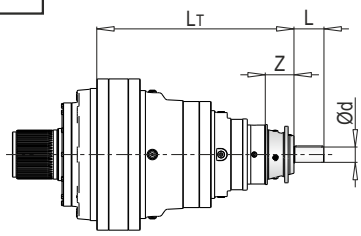

PL	EP 65				ET 90			
	LT	Z	L	Ød	LT	Z	L	Ød
380003	-				1174.5	171.5	170	90
380004	1243	153	105	65	1261.5			
380005	1314.5				-			

PL	~ Kg							
	EL C 28	EL C 42	EML 42	EML 1"3/8 Z6	EM 65	EM 1"3/8 Z6	EP 65	ET 90
380003	-	-	-	-	-	-	-	2570
380004	-	-	-	-	2574	2574	2583	2605
380005	2578	2578	2581	2581	2589	2589	2598	-

PL 380000 MS - Sonsuz Dişlili Redüktör Adaptörleri (PMRV/PRV) / Worm Gearbox Adaptors (PMRV/PRV) / Anschluss Für Schneckengetriebe (PMRV/PRV) / Predisposizioni Per Riduttori A Vite Senza Fine (PMRV/PRV) / Adaptation Pour Reducteurs A Vis Sans Fin (PMRV/PRV) / Acoplamiento Para Reductores De Tornillo Sin Fin (PMRV/PRV)

PL	PMRV/PRV 050					PMRV/PRV 063					PMRV/PRV 075				
	LM	l	h	MA	G	LM	l	h	MA	G	LM	l	h	MA	G
380004	-					-					-				
380005	1283	50	110	60	80	1292.5	60	113	72	95	1271.5	75	161	86	112.5

PL	PMRV/PRV 090					PMRV/PRV 110					PMRV/PRV 130				
	LM	l	h	MA	G	LM	l	h	MA	G	LM	l	h	MA	G
380004	-					1224	110	237.5	127.5	160	1229.5	130	277.5	147.5	180
380005	1281.5	90	193	103	129.5	1295.5					1301				

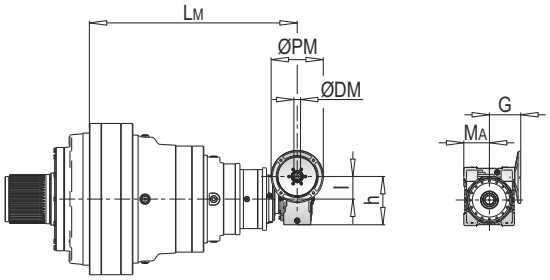

ØPM
ØDM
105

PL	PMRV/PRV 150				
	LM	l	h	MA	G
380004	1246	150	320	170	210
380005	1317.5				

PL	PMRV/PRV ~ Kg						
	050	063	075	090	110	130	150
380004	-	-	-	-	2603	2620	2646
380005	2580	2584	2586	2591	2618	2635	2671

PLB 380000 MS - Elektrik Motor Adaptörleri (IEC) / Electric Motor Couplings (IEC) / Anbauvorrichtung Für Elektromotore (IEC) / Predisposizioni Per Motori Elettrici (IEC) / Adaptations Pour Moteurs Electriques (IEC) / Acoplamientos Para Motores Eléctricos (IEC)

PLB	IEC 80				IEC 90				IEC 100				IEC 112			
	A	LT	Z	ØD	A	LT	Z	ØD	A	LT	Z	ØD	A	LT	Z	ØD
380005	1178	296	56	200	1178	296	56	200	1178	306	66	250	1178	306	66	250

PLB	IEC 132				IEC 160				IEC 180			
	A	LT	Z	ØD	A	LT	Z	ØD	A	LT	Z	ØD
380005	1178	340	100	300	1178	379	139	350	1178	379	139	350

PLB	IEC ~ Kg						
	80	90	100	112	132	160	180
380005	2680	2680	2681	2681	2685	2695	2695

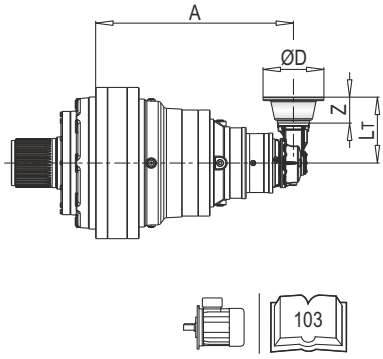

PLB 380000 MS - Giriş Milleri / Input Shafts / Antriebswellen / Alberi Entrata / Arbres D'entree / Ejes De Entrada

PLB	EM 65					EM 1"3/8 Z6					EP 65				
	A	LT	Z	L	Ød	A	LT	Z	L	Ød	A	LT	Z	L	Ød
380005	1178	361.5	121.5	105	65	1178	361.5	121.5	105	1"3/8	1178	393	153	105	65

PLB	~ Kg		
	EM 65	EM 1"3/8 Z6	EP 65
380005	2690	2690	2699

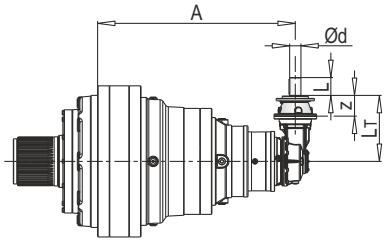

Ød
88-90

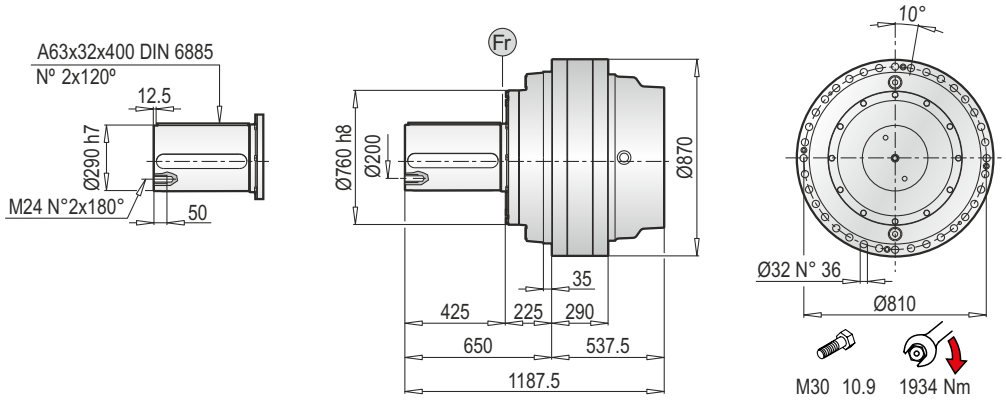

PL 380000 MC - Elektrik Motor Adaptörleri (IEC) / Electrıc Motor Couplings (IEC) / Anbauvorrichtung Für Elektromotore (IEC) / Predisposizioni Per Motori Elettrici (IEC) / Adaptations Pour Moteurs Electriques (IEC) / Acoplamientos Para Motores Eléctricos (IEC)

PL	IEC 63			IEC 71			IEC 80			IEC 90			IEC 100			IEC 112			IEC 132		
	LT	Z	ØD	LT	Z	ØD	LT	Z	ØD	LT	Z	ØD	LT	Z	ØD	LT	Z	ØD	LT	Z	ØD
380001	-			-			-			-			-			-			-		
380002	-			-			-			-			-			-			-		
380003	-			-			-			-			-			-			-		
380004	-			-			-			-			-			-			-		
380005	1197.5	36	140	1197.5	36	160	1217.5	56	200	1217.5	56	200	1227.5	66	250	1227.5	66	250	1261.5	100	300

PL	IEC 160			IEC 180			IEC 200			IEC 225			IEC 250			IEC 280		
	LT	Z	ØD	LT	Z	ØD	LT	Z	ØD	LT	Z	ØD	LT	Z	ØD	LT	Z	ØD
380001	687	150	350	687	150	350	687	150	400	676.5	139	450	676.5	139	550	676.5	139	550
380002	956			956			956			945			945			945		
380003	1156			1156			1156			1142			1142			1142		
380004	1208	118		1208	118		1238	148		1229			1238.5	148.5		-		
380005	1300.5	139		1300.5	139		-			-			-			-		

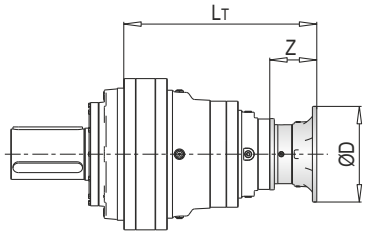

PL	IEC ~ Kg												
	63	71	80	90	100	112	132	160	180	200	225	250	280
380001	-	-	-	-	-	-	-	2085	2085	2090	2096	2108	2120
380002	-	-	-	-	-	-	-	2455	2455	2460	2466	2478	2490
380003	-	-	-	-	-	-	-	2567	2567	2572	2578	2590	2602
380004	-	-	-	-	-	-	-	2579	2579	2589	2564	2635	-
380005	2577	2577	2579	2579	2580	2580	2584	2594	2594	-	-	-	-

PL 380000 MC - Giriş Milleri / Input Shafts / Antriebswellen / Alberi Entrata / Arbres D'entree / Ejes De Entrada

PL	EL C 28				EL C 42				EML 42				EML 1"3/8 Z6				EM 65				EM 1"3/8 Z6			
	LT	Z	L	Ød	LT	Z	L	Ød	LT	Z	L	Ød	LT	Z	L	Ød	LT	Z	L	Ød	LT	Z	L	Ød
380003	-				-				-				-				-				-			
380004	-				-				-				-				1211.5	121.5	105	65	121.5	121.5	105	1"3/8
380005	1225.5	64	50	28	1225.5	64	82	42	1255.5	94	82	42	1255.5	94	106	1"3/8	1283				1283			

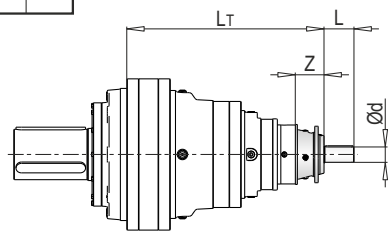

PL	EP 65				ET 90			
	LT	Z	L	Ød	LT	Z	L	Ød
380003	-				1174.5	171.5	170	90
380004	1243	153	105	65	1261.5			
380005	1314.5				-			

PL	~ Kg							
	EL C 28	EL C 42	EML 42	EML 1"3/8 Z6	EM 65	EM 1"3/8 Z6	EP 65	ET 90
380003	-	-	-	-	-	-	-	2570
380004	-	-	-	-	2574	2574	2583	2605
380005	2578	2578	2581	2581	2589	2589	2598	-

PL 380000 MC - Sonsuz Dişlili Redüktör Adaptörleri (PMRV/PRV) / Worm Gearbox Adaptors (PMRV/PRV) / Anschluss Für Schneckengetriebe (PMRV/PRV) / Predisposizioni Per Riduttori A Vite Senza Fine (PMRV/PRV) / Adaptation Pour Reducteurs A Vis Sans Fin (PMRV/PRV) / Acoplamiento Para Reductores De Tornillo Sin Fin (PMRV/PRV)

PL	PMRV/PRV 050					PMRV/PRV 063					PMRV/PRV 075				
	LM	l	h	MA	G	LM	l	h	MA	G	LM	l	h	MA	G
380004	-					-					-				
380005	1283	50	110	60	80	1292.5	60	113	72	95	1271.5	75	161	86	112.5

PL	PMRV/PRV 090					PMRV/PRV 110					PMRV/PRV 130				
	LM	l	h	MA	G	LM	l	h	MA	G	LM	l	h	MA	G
380004	-					1224	110	237.5	127.5	160	1229.5	130	277.5	147.5	180
380005	1281.5	90	193	103	129.5	1295.5					1301				

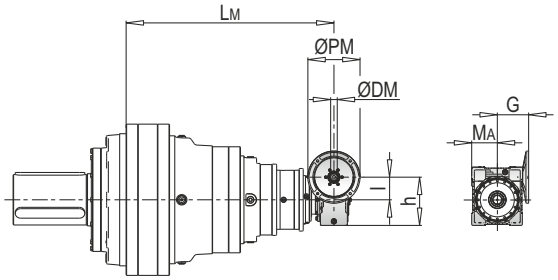

ØPM
ØDM
105

PL	PMRV/PRV 150				
	LM	l	h	MA	G
380004	1246	150	320	170	210
380005	1317.5				

PL	PMRV/PRV ~ Kg						
	050	063	075	090	110	130	150
380004	-	-	-	-	2603	2620	2646
380005	2580	2584	2586	2591	2618	2635	2671

PLB 380000 MC - Elektrik Motor Adaptörleri (IEC) / Electric Motor Couplings (IEC) / Anbauvorrichtung Für Elektromotore (IEC) / Predisposizioni Per Motori Elettrici (IEC) / Adaptations Pour Moteurs Electriques (IEC) / Acoplamientos Para Motores Eléctricos (IEC)

PLB	IEC 80				IEC 90				IEC 100				IEC 112			
	A	LT	Z	ØD	A	LT	Z	ØD	A	LT	Z	ØD	A	LT	Z	ØD
380005	1178	296	56	200	1178	296	56	200	1178	306	66	250	1178	306	66	250

PLB	IEC 132				IEC 160				IEC 180			
	A	LT	Z	ØD	A	LT	Z	ØD	A	LT	Z	ØD
380005	1178	340	100	300	1178	379	139	350	1178	379	139	350

PLB	IEC ~ Kg						
	80	90	100	112	132	160	180
380005	2680	2680	2681	2681	2685	2695	2695

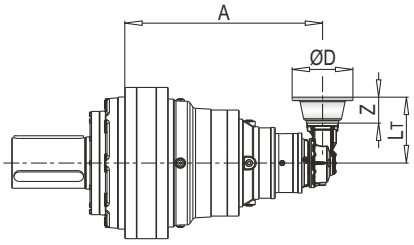

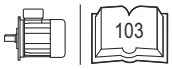
103

PLB 380000 MC - Giriş Milleri / Input Shafts / Antriebswellen / Alberi Entrata / Arbres D'entree / Ejes De Entrada

PLB	EM 65					EM 1"3/8 Z6					EP 65				
	A	LT	Z	L	Ød	A	LT	Z	L	Ød	A	LT	Z	L	Ød
380005	1178	361.5	121.5	105	65	1178	361.5	121.5	105	1"3/8	1178	393	153	105	65

PLB	~ Kg		
	EM 65	EM 1"3/8 Z6	EP 65
380005	2690	2690	2699

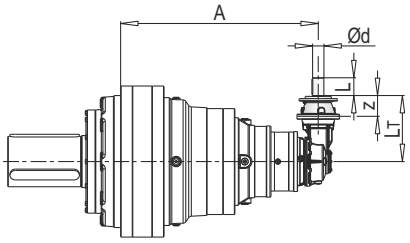

Ød
88-90

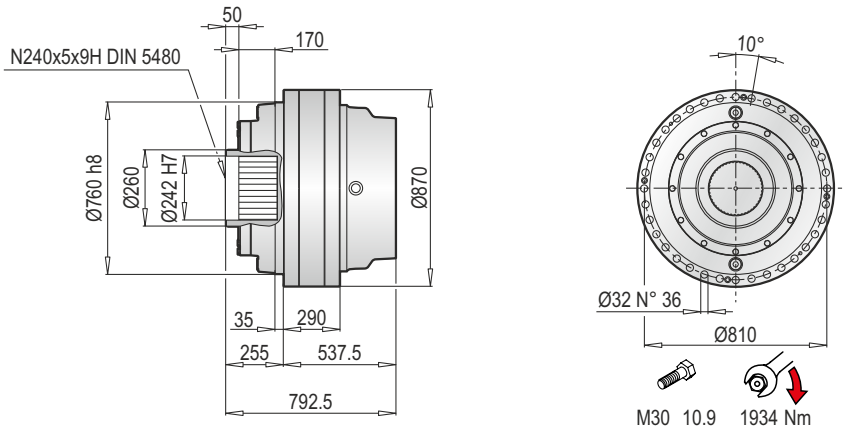

PL 380000 F - Elektrik Motor Adaptörleri (IEC) / Electrıc Motor Couplings (IEC) /Anbauvorrichtung Für Elektromotore (IEC) / Predisposizioni Per Motori Elettrici (IEC) / Adaptations Pour Moteurs Electriques (IEC) /Acoplamientos Para Motores Eléctricos (IEC)

PL	IEC 63			IEC 71			IEC 80			IEC 90			IEC 100			IEC 112			IEC 132		
	LT	Z	ØD	LT	Z	ØD	LT	Z	ØD	LT	Z	ØD	LT	Z	ØD	LT	Z	ØD	LT	Z	ØD
380001	-			-			-			-			-			-			-		
380002	-			-			-			-			-			-			-		
380003	-			-			-			-			-			-			-		
380004	-			-			-			-			-			-			-		
380005	1197.5	36	140	1197.5	36	160	1217.5	56	200	1217.5	56	200	1227.5	66	250	1227.5	66	250	1261.5	100	300

PL	IEC 160			IEC 180			IEC 200			IEC 225			IEC 250			IEC 280		
	LT	Z	ØD	LT	Z	ØD	LT	Z	ØD	LT	Z	ØD	LT	Z	ØD	LT	Z	ØD
380001	687	150	350	687	150	350	687	150	400	676.5	139	450	676.5	139	550	676.5	139	550
380002	956			956			956			945			945			945		
380003	1156			1156			1156			1142			1142			1142		
380004	1208	118		1208	118		1238	148		1229			1238.5	148.5		-		
380005	1300.5	139		1300.5	139		-			-			-			-		

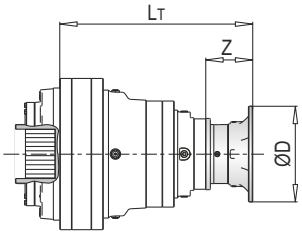

PL	IEC ~ Kg												
	63	71	80	90	100	112	132	160	180	200	225	250	280
380001	-	-	-	-	-	-	-	1935	1935	1940	1946	1958	1970
380002	-	-	-	-	-	-	-	2305	2305	2310	2316	2328	2340
380003	-	-	-	-	-	-	-	2417	2417	2417	2428	2440	2452
380004	-	-	-	-	-	-	-	2429	2429	2439	2414	2485	-
380005	2427	2427	2429	2429	2430	2430	2434	2444	2444	-	-	-	-

PL 380000 F - Giriş Milleri / Input Shafts / Antriebswellen / Alberi Entrata / Arbres D'entree / Ejes De Entrada

PL	EL C 28				EL C 42				EML 42				EML 1"3/8 Z6				EM 65				EM 1"3/8 Z6			
	LT	Z	L	Ød	LT	Z	L	Ød	LT	Z	L	Ød	LT	Z	L	Ød	LT	Z	L	Ød	LT	Z	L	Ød
380003	-				-				-				-				-				-			
380004	-				-				-				-				1211.5	121.5	105	65	121.5	121.5	105	1"3/8
380005	1225.5	64	50	28	1225.5	64	82	42	1255.5	94	82	42	1255.5	94	106	1"3/8	1283				1283			

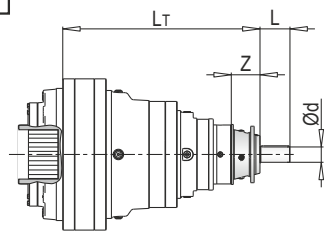

PL	EP 65				ET 90			
	LT	Z	L	Ød	LT	Z	L	Ød
380003	-				1174.5	171.5	170	90
380004	1243	153	105	65	1261.5			
380005	1314.5				-			

PL	~ Kg							
	EL C 28	EL C 42	EML 42	EML 1"3/8 Z6	EM 65	EM 1"3/8 Z6	EP 65	ET 90
380003	-	-	-	-	-	-	-	2420
380004	-	-	-	-	2424	2424	2433	2455
380005	2428	2428	2431	2431	2439	2439	2448	-

PL 380000 F - Sonsuz Dişlili Redüktör Adaptörleri (PMRV/PRV) / Worm Gearbox Adaptors (PMRV/PRV) / Anschluss Für Schneckengetriebe (PMRV/PRV) / Predisposizioni Per Riduttori A Vite Senza Fine (PMRV/PRV) / Adaptation Pour Reducteurs A Vis Sans Fin (PMRV/PRV) / Acoplamiento Para Reductores De Tornillo Sin Fin (PMRV/PRV)

PL	PMRV/PRV 050					PMRV/PRV 063					PMRV/PRV 075				
	LM	l	h	MA	G	LM	l	h	MA	G	LM	l	h	MA	G
380004	-					-					-				
380005	1283	50	110	60	80	1292.5	60	113	72	95	1271.5	75	161	86	112.5

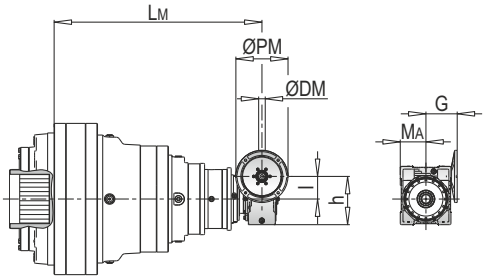

PL	PMRV/PRV 090					PMRV/PRV 110					PMRV/PRV 130				
	LM	l	h	MA	G	LM	l	h	MA	G	LM	l	h	MA	G
380004	-					1224	110	237.5	127.5	160	1229.5	130	277.5	147.5	180
380005	1281.5	90	193	103	129.5	1295.5					1301				

ØPM
ØDM
105

PL	PMRV/PRV 150				
	LM	l	h	MA	G
380004	1246	150	320	170	210
380005	1317.5				

PL	PMRV/PRV ~ Kg						
	50	63	75	90	110	130	150
380004	-	-	-	-	2453	2470	2496
380005	2430	2434	2436	2441	2468	2485	2521

PLB 380000 F - Elektrik Motor Adaptörleri (IEC) / Electric Motor Couplings (IEC) / Anbauvorrichtung Für Elektromotore (IEC) / Predisposizioni Per Motori Elettrici (IEC) / Adaptations Pour Moteurs Electriques (IEC) / Acoplamientos Para Motores Eléctricos (IEC)

PLB	IEC 80				IEC 90				IEC 100				IEC 112			
	A	LT	Z	ØD	A	LT	Z	ØD	A	LT	Z	ØD	A	LT	Z	ØD
380005	1178	296	56	200	1178	296	56	200	1178	306	66	250	1178	306	66	250

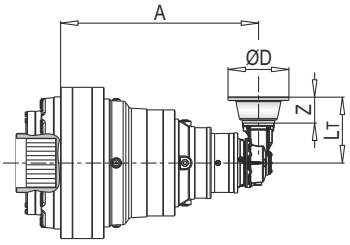

PLB	IEC 132				IEC 160				IEC 180			
	A	LT	Z	ØD	A	LT	Z	ØD	A	LT	Z	ØD
380005	1178	340	100	300	1178	379	139	350	1178	379	139	350

PLB	IEC ~ Kg						
	80	90	100	112	132	160	180
380005	2530	2530	2531	2531	2535	2545	2545

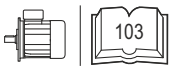
103

PLB 380000 F - Giriş Milleri / Input Shafts / Antriebswellen / Alberi Entrata / Arbres D'entree / Ejes De Entrada

PLB	EM 65					EM 1"3/8 Z6					EP 65				
	A	LT	Z	L	Ød	A	LT	Z	L	Ød	A	LT	Z	L	Ød
380005	1178	361.5	121.5	105	65	1178	361.5	121.5	105	1"3/8	1178	393	153	105	65

PLB	~ Kg		
	EM 65	EM 1"3/8 Z6	EP 65
380005	2540	2540	2549

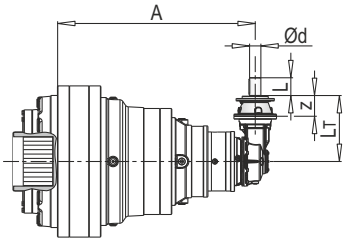

Ød
88-90

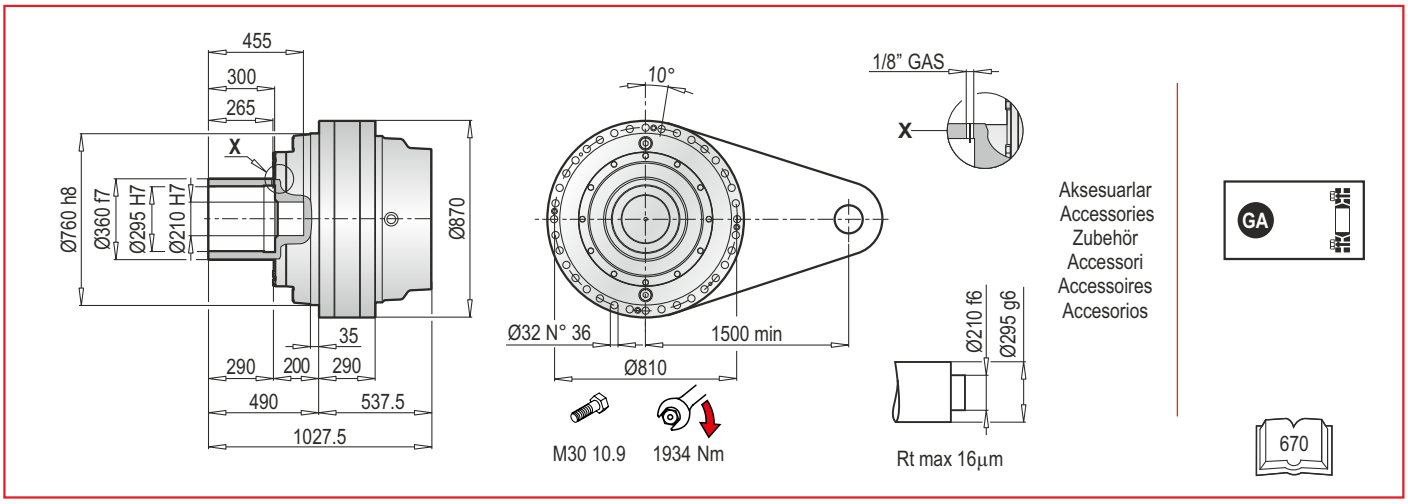

PL 380000 FS - Elektrik Motor Adaptörleri (IEC) / Electrıc Motor Couplings (IEC) / Anbauvorrichtung Für Elektromotore (IEC) / Predisposizioni Per Motori Elettrici (IEC) / Adaptations Pour Moteurs Electriques (IEC) / Acoplamientos Para Motores Eléctricos (IEC)

PL	IEC 63			IEC 71			IEC 80			IEC 90			IEC 100			IEC 112			IEC 132		
	LT	Z	ØD	LT	Z	ØD	LT	Z	ØD	LT	Z	ØD	LT	Z	ØD	LT	Z	ØD	LT	Z	ØD
380001	-			-			-			-			-			-			-		
380002	-			-			-			-			-			-			-		
380003	-			-			-			-			-			-			-		
380004	-			-			-			-			-			-			-		
380005	1197.5	36	140	1197.5	36	160	1217.5	56	200	1217.5	56	200	1227.5	66	250	1227.5	66	250	1261.5	100	300

PL	IEC 160			IEC 180			IEC 200			IEC 225			IEC 250			IEC 280		
	LT	Z	ØD	LT	Z	ØD	LT	Z	ØD	LT	Z	ØD	LT	Z	ØD	LT	Z	ØD
380001	687	150	350	687	150	350	687	150	400	676.5	139	450	676.5	139	550	676.5	139	550
380002	956			956			956			945			945			945		
380003	1156			1156			1156			1142			1142			1142		
380004	1208	118		1208	118		1238	148		1229			1238.5	148.5		-	-	-
380005	1300.5	139		1300.5	139		-	-	-	-	-	-	-	-	-	-	-	-

PL	IEC ~ Kg												
	63	71	80	90	100	112	132	160	180	200	225	250	280
380001	-	-	-	-	-	-	-	2043	2043	2048	2054	2066	2078
380002	-	-	-	-	-	-	-	2413	2413	2418	2436	2436	2448
380003	-	-	-	-	-	-	-	2525	2525	2530	2536	2548	2560
380004	-	-	-	-	-	-	-	2537	2537	2547	2522	2593	-
380005	2535	2535	2537	2537	2538	2538	2542	2552	2552	-	-	-	-

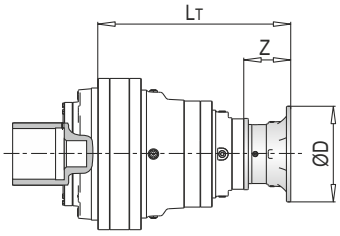

PL 380000 FS - Giriş Milleri / Input Shafts / Antriebswellen / Alberi Entrata / Arbres D'entree / Ejes De Entrada

PL	EL C 28				EL C 42				EML 42				EML 1"3/8 Z6				EM 65				EM 1"3/8 Z6			
	LT	Z	L	Ød	LT	Z	L	Ød	LT	Z	L	Ød	LT	Z	L	Ød	LT	Z	L	Ød	LT	Z	L	Ød
380003	-				-				-				-				-				-			
380004	-				-				-				-				1211.5	121.5	105	65	1211.5	121.5	105	1"3/8
380005	1225.5	64	50	28	1225.5	64	82	42	1255.5	94	82	42	1255.5	94	106	1"3/8	1283				1283			

PL	EP 65				ET 90			
	LT	Z	L	Ød	LT	Z	L	Ød
380003	-				1174.5	171.5	170	90
380004	1243	153	105	65	1261.5			
380005	1314.5				-			

PL	~ Kg							
	EL C 28	EL C 42	EML 42	EML 1"3/8 Z6	EM 65	EM 1"3/8 Z6	EP 65	ET 90
380003	-	-	-	-	-	-	-	2528
380004	-	-	-	-	2532	2532	2541	2563
380005	2536	2536	2539	2539	2547	2547	2556	-

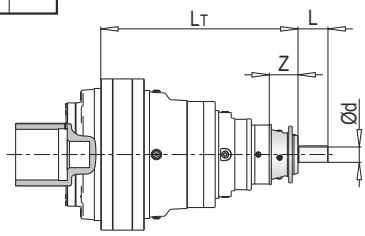

PL 380000 FS - Sonsuz Dişlili Redüktör Adaptörleri (PMRV/PRV) / Worm Gearbox Adaptors (PMRV/PRV) / Anschluss Für Schneckengetriebe (PMRV/PRV) / Predisposizioni Per Riduttori A Vite Senza Fine (PMRV/PRV) / Adaptation Pour Reducteurs A Vis Sans Fin (PMRV/PRV) / Acoplamiento Para Reductores De Tornillo Sin Fin (PMRV/PRV)

PL	PMRV/PRV 050					PMRV/PRV 063					PMRV/PRV 075				
	LM	l	h	MA	G	LM	l	h	MA	G	LM	l	h	MA	G
380004	-					-					-				
380005	1283	50	110	60	80	1292.5	60	113	72	95	1271.5	75	161	86	112.5

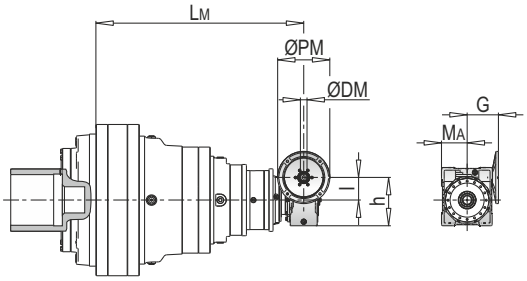

PL	PMRV/PRV 090					PMRV/PRV 110					PMRV/PRV 130				
	LM	l	h	MA	G	LM	l	h	MA	G	LM	l	h	MA	G
380004	-					1224	110	237.5	127.5	160	1229.5	130	277.5	147.5	180
380005	1281.5	90	193	103	129.5	1295.5					1301				

ØPM
ØDM
105

PL	PMRV/PRV 150				
	LM	l	h	MA	G
380004	1246	150	320	170	210
380005	1317.5				

PL	PMRV/PRV ~ Kg						
	050	063	075	090	110	130	150
380004	-	-	-	-	2561	2578	2604
380005	2538	2542	2544	2549	2576	2593	2629

PLB 380000 FS - Elektrik Motor Adaptörleri (IEC) / Electric Motor Couplings (IEC) / Anbauvorrichtung Für Elektromotore (IEC) / Predisposizioni Per Motori Elettrici (IEC) / Adaptations Pour Moteurs Electriques (IEC) / Acoplamientos Para Motores Eléctricos (IEC)

PLB	IEC 80				IEC 90				IEC 100				IEC 112			
	A	LT	Z	ØD	A	LT	Z	ØD	A	LT	Z	ØD	A	LT	Z	ØD
380005	1178	296	56	200	1178	296	56	200	1178	306	66	250	1178	306	66	250

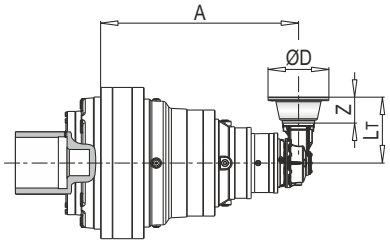

PLB	IEC 132				IEC 160				IEC 180			
	A	LT	Z	ØD	A	LT	Z	ØD	A	LT	Z	ØD
380005	1178	340	100	300	1178	379	139	350	1178	379	139	350

PLB	IEC ~ Kg						
	80	90	100	112	132	160	180
380005	2638	2638	2639	2639	2643	2653	2653

103

PLB 380000 FS - Giriş Milleri / Input Shafts / Antriebswellen / Alberi Entrata / Arbres D'entree / Ejes De Entrada

PLB	EM 65					EM 1"3/8 Z6					EP 65				
	A	LT	Z	L	Ød	A	LT	Z	L	Ød	A	LT	Z	L	Ød
380005	1178	361.5	121.5	105	65	1178	361.5	121.5	105	1"3/8	1178	393	153	105	65

PLB	~ Kg		
	EM 65	EM 1"3/8 Z6	EP 65
380005	2648	2648	2657

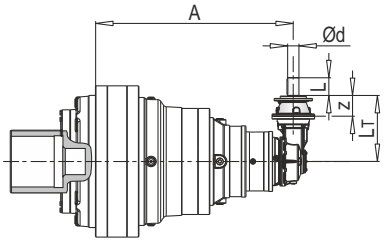

Ød
88-90

AKSESUARLAR / ACCESSORIES / ZUBEHÖR / ACCESSORI / ACCESSOIRES / ACCESORIOS

GA

Konik sıktırma / Shrink disc / Schrumpfscheibe
Giunto di attrito / Frette de serrage / Disco de contracción

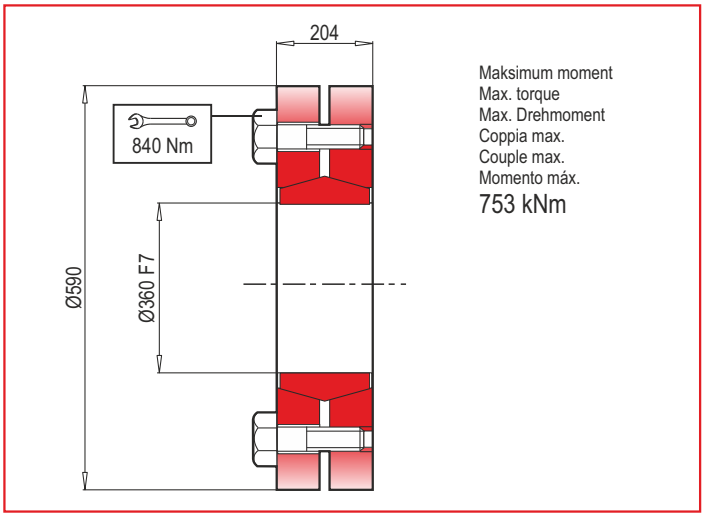

TR RADYAL YÜKLER (Fr)

Aşağıdaki grafikler istenilen $n_2$xh değerinin elde edilmesi için gerekli olan radyal yükleri ve K faktörlerini göstermektedir.

EN RADIAL LOADS (Fr)

The following curves show the radial loads and the K factors to obtain the required n2xh value.

DE RADIALLAST (Fr)

In den nachstehenden Diagrammen ist die Radiallast un der Koeffizient K dargestellt und kann mit dem gewünschten Wert $n_2$xh verglichen werden.

IT CARICHI RADIALI (Fr)

Nei diagrammi seguenti sono riportati i carichi radiali e i coefficienti K per rapportarli al valore $n_2$xh desiderato.

FR CHARGES RADIALES (Fr)

Dans les diagrammes suivants sont indiqués les charges radiales et les facteurs K de façon à obtenir la valeur $n_2$xh désirée.

ES CARGAS RADIALES (Fr)

En los siguientes diagramas se indican las cargas radiales y los coefici - entes K para obtener el valor requerido $n_2$xh.

M

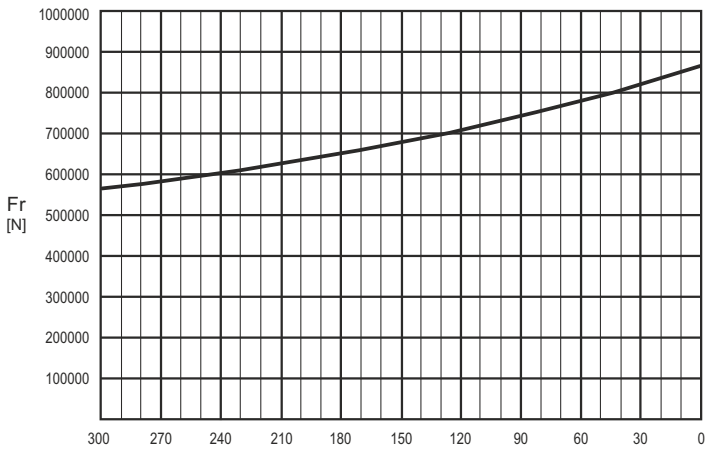

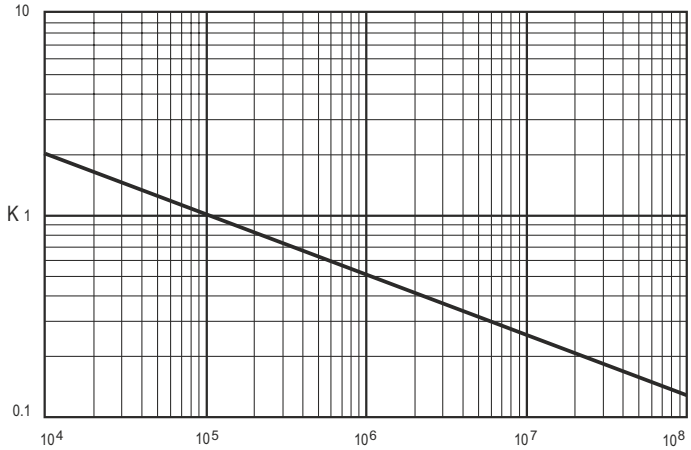

	$n_2$xh				
	10^5	10^4	10^6	10^7	10^8
M	Fr	Fr • K			

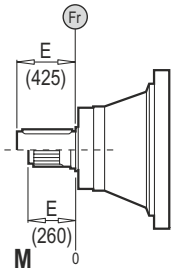

TR EKSENEL YÜKLER (Fa)

Tabloda yer alan eksenel yük değerleri, çıkış tipine ve uygulamanın yük yönüne göre değişir.

EN AXIAL LOADS (Fa)

The values of the axial loads in the table refer to the output versions and load direction of application.

DE AXIALLAST (Fa)

Die dargestellten Werte der Axiallast basieren auf der Version und der applizierten Lastrichtung.

IT CARICHI ASSIALI (Fa)

I valori dei carichi assiali indicati in tabella sono riferiti alle versioni e alla direzione di applicazione del carico.

FR CHARGES AXIALES (Fa)

Les valeurs des charges axiales indiquées dans le tableau se réfèrent aux versions et à la direction d'application de lacharge.

ES CARGAS AXIALES (Fa)

Los valores de las cargas axiales indicados en la tabla se refieren a las versiones y a la dirección de aplicación de la carga.

Fa [N]	M	
	240000	←
	160500	→

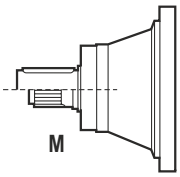

TEKNİK VERİLER / TECHNICAL DATA / TECHNISCHE DATEN / DATI TECNICI / DONNÉES TECHNIQUES / DATOS TÉCNICAS

	i_{ges}	Mmax (n_2 x h: 20000) (Nm)
460001	3.83	694500
460002	14.69 ... 16.87	694500
460003	58.11 ... 101.20	693800
460004	237.16 ... 683.10	640500
460005	780.54 ... 4952.48	558100

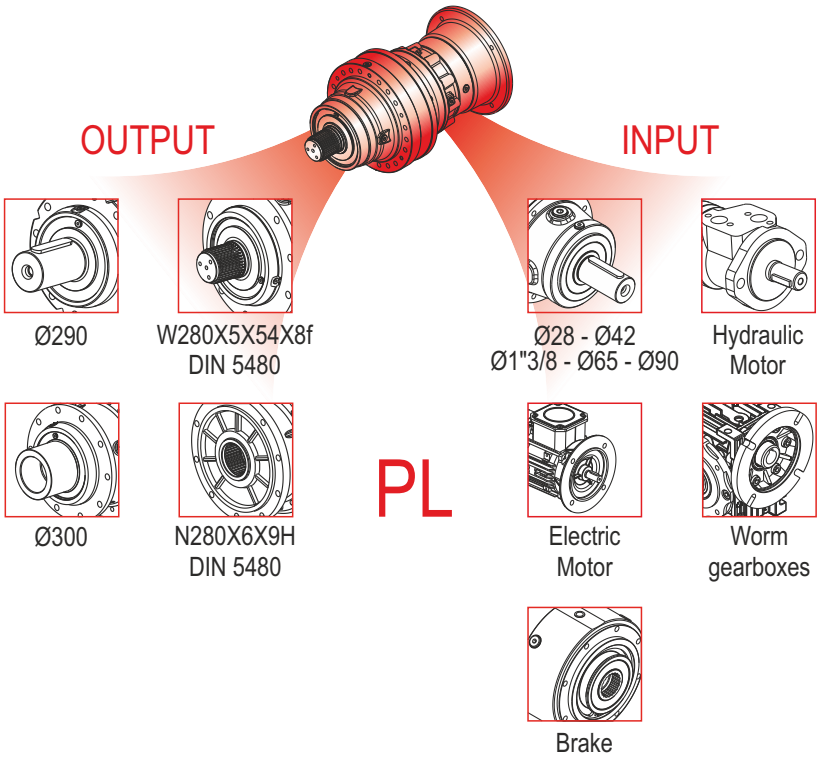

	i_{ges}	Mmax (n_2 x h: 20000) (Nm)
460005	634.60 ... 3187.80	544400

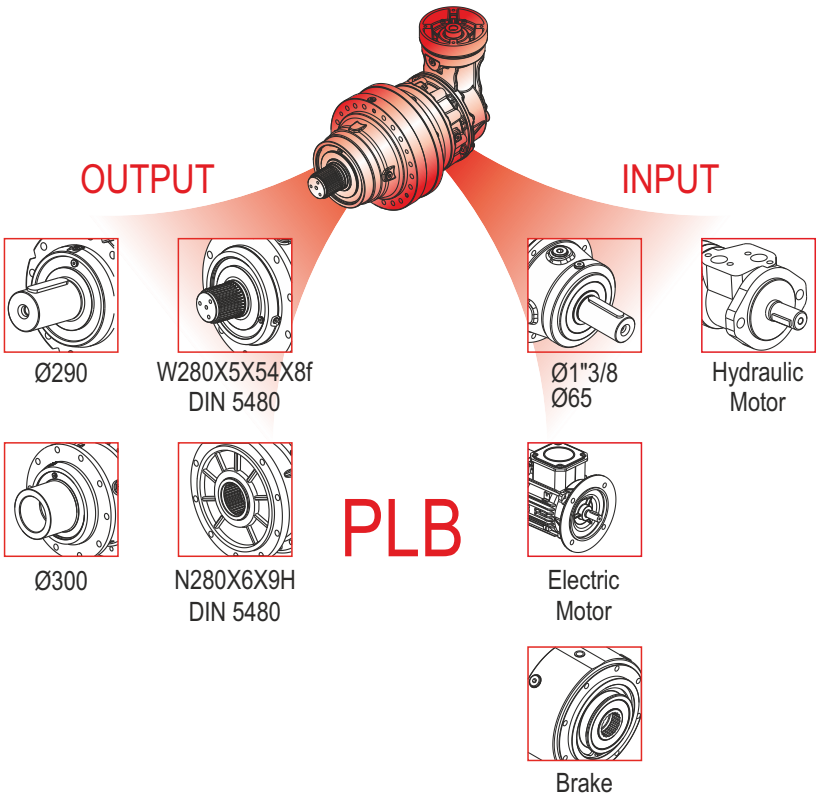

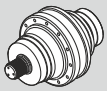	Pt [kW]	n_{1max} [min^{-1}]	i_{ges}	Mc [kNm] n_2 x h 10.000	n_2 x h 20.000	n_2 x h 50.000	n_2 x h 100.000	Giriş- Input - Antrieb - Entrata - Entrée - Entrada IEC (B5)	PMRV / PRV	EL - EML EM - EP - ET
PL 460001	224	200	3.83	642.8	578.7	503.8	461.0	160 200 250 180 225 280	-	-
PL 460002	133	750	14.69 16.87	642.8 642.0	578.7 578.1	503.8 503.3	461.0 461.0	160 200 250 180 225 280	-	-
PL 460003	90	1500	58.11 66.70 74.39 85.39 101.20	603.6 642.0 441.9 495.0 394.8	534.3 578.1 391.1 438.1 349.5	454.6 503.3 332.7 372.8 297.4	402.5 450.8 294.6 330.0 263.3	160 225 180 250 200 280	-	ET 90
PL 460004	73	2800	237.16 285.86 318.82 365.95 416.59 478.17 566.72 683.10	603.1 525.5 441.9 495.0 439.8 492.7 394.8 394.8	533.8 465.1 391.1 438.1 389.2 436.1 349.5 349.5	454.1 395.8 332.7 372.8 331.2 371.1 297.4 297.4	402.0 350.5 294.6 330.0 293.4 328.5 263.3 263.3	160 180 200 225 250 280	110 130 150	EM 65 EM 1"3/8 Z6 EP 65 ET 90
PL 460005	59	2800	780.54 895.92 940.83 1079.90 1252.35 1382.46 1509.53 1647.22 1890.72 1972.45 2152.37 2470.55 2602.29 2869.02 3144.43 3466.73 4098.60 4314.66 4952.48	421.9 472.7 469.1 525.5 495.0 495.0 495.0 441.9 495.0 492.7 439.8 492.7 394.8 492.7 394.8 430.7 394.8 352.4 387.1	373.6 418.6 415.1 465.1 438.1 438.1 438.1 391.1 438.1 436.1 389.2 436.1 349.5 436.1 349.5 381.2 349.5 311.9 342.6	318.0 356.4 353.2 395.8 372.8 372.8 372.8 332.7 372.8 371.1 331.2 371.1 297.4 371.1 297.4 324.2 297.4 265.5 291.6	281.5 315.4 312.8 350.5 330.0 330.0 330.0 294.6 330.0 328.5 293.4 328.5 263.3 328.5 263.3 287.6 263.3 235.0 258.1	63 71 80 90 100 112 132 160 180	050 063 075 090 110 130 150	EL C 28 EL C 42 EML 42 EML 1"3/8 Z6 EM 65 EM 1"3/8 Z6 EP 65

	Pt [kW]	n_{1max} [min^{-1}]	i_{ges}	Mc [kNm]				Giriş- Input - Antrieb - Entrata - Entrée - Entrada	
				n_2 x h	n_2 x h	n_2 x h	n_2 x h		
				10.000	20.000	50.000	100.000	IEC (B5)	EL - EML EM - EP - ET
PLB 460005	52	2500	634.60 728.41 764.92 877.99 932.49 1123.98 1234.33 1334.00 1468.67 1707.75 1944.08 2231.46 2644.69 3187.80	444.9 490.0 469.1 525.5 495.0 495.0 441.9 509.7 492.7 495.0 439.8 492.7 394.8 394.8	361.5 398.1 412.0 453.7 438.1 438.1 391.1 413.8 436.1 438.1 389.2 436.1 349.5 349.5	274.7 302.5 313.0 344.8 359.7 372.8 297.5 314.2 371.1 372.8 331.2 371.1 297.4 297.4	223.2 245.8 254.4 280.1 292.2 330.0 241.5 255.1 328.5 303.2 293.4 328.5 263.3 263.3	80 90 100 112 132 160 180	EM 65 EM 1"3/8 Z6 EP 65

$$M_{max} = M_C \times 1.2 \quad (n_2 \times h = 20.000)$$

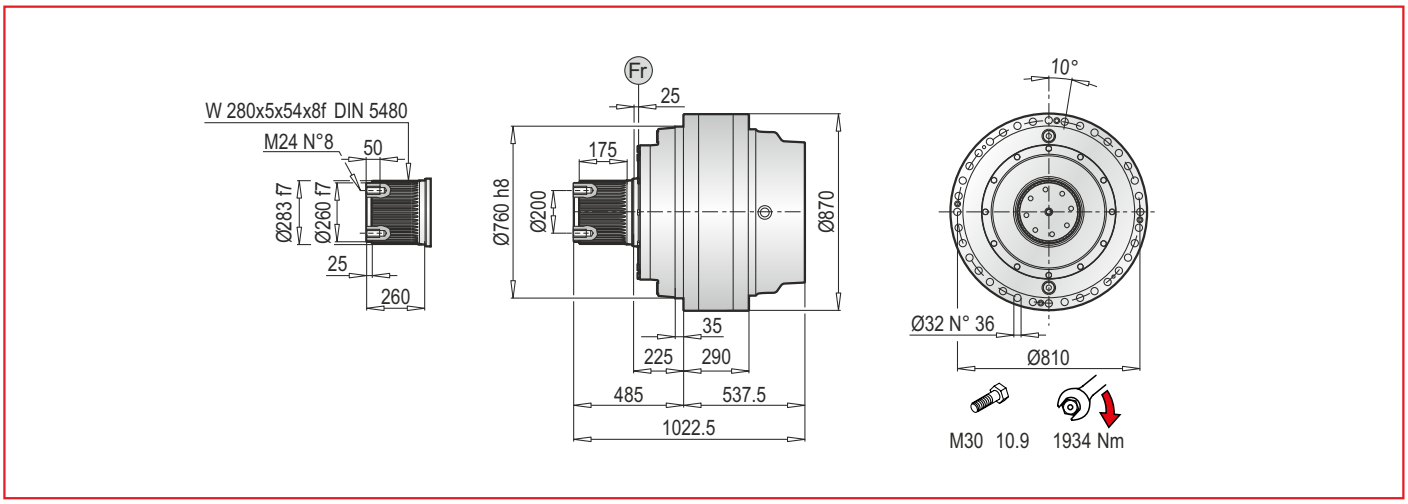

PL 460000 MS - Elektrik Motor Adaptörleri (IEC) / Electrıc Motor Couplings (IEC) / Anbauvorrichtung Für Elektromotore (IEC) / Predisposizioni Per Motori Elettrici (IEC) / Adaptations Pour Moteurs Electriques (IEC) / Acoplamientos Para Motores Eléctricos (IEC)

PL	IEC 63			IEC 71			IEC 80			IEC 90			IEC 100			IEC 112			IEC 132		
	LT	Z	ØD	LT	Z	ØD	LT	Z	ØD	LT	Z	ØD	LT	Z	ØD	LT	Z	ØD	LT	Z	ØD
460001	-			-			-			-			-			-			-		
460002	-			-			-			-			-			-			-		
460003	-			-			-			-			-			-			-		
460004	-			-			-			-			-			-			-		
460005	1320	36	140	1320	36	160	1340	56	200	1340	56	200	1350	66	250	1350	66	250	1384	100	300

PL	IEC 160			IEC 180			IEC 200			IEC 225			IEC 250			IEC 280		
	LT	Z	ØD	LT	Z	ØD	LT	Z	ØD	LT	Z	ØD	LT	Z	ØD	LT	Z	ØD
460001	687.5	150	350	687.5	150	350	687.5	150	400	676.5	139	450	676.5	139	550	676.5	139	550
460002	1034.5			1034.5			1034.5			1023.5			1023.5			1023.5		
460003	1255.5			1255.5			1255.5			1244.5			1244.5			1244.5		
460004	1330.5	118		1330.5	118		1360.5	148		1351.5			1361	148.5		1361	148.5	
460005	1423	139		1423	139		-			-			-			-		

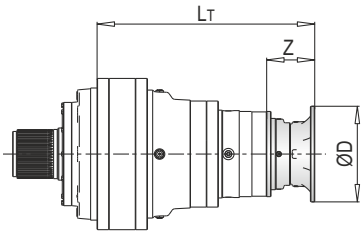

PL	IEC ~ Kg												
	63	71	80	90	100	112	132	160	180	200	225	250	280
460001	-	-	-	-	-	-	-	2085	2085	2090	2096	2108	2120
460002	-	-	-	-	-	-	-	2490	2490	2495	2501	2513	2525
460003	-	-	-	-	-	-	-	2606	2606	2611	2617	2629	2641
460004	-	-	-	-	-	-	-	2610	2610	2620	2625	2666	2668
460005	2607	2607	2609	2609	2610	2610	2614	2624	2624	-	-	-	-

PL 460000 MS - Giriş Milleri / Input Shafts / Antriebswellen / Alberi Entrata / Arbres D'entree / Ejes De Entrada

PL	EL C 28				EL C 42				EML 42				EML 1"3/8 Z6				EM 65				EM 1"3/8 Z6			
	LT	Z	L	Ød	LT	Z	L	Ød	LT	Z	L	Ød	LT	Z	L	Ød	LT	Z	L	Ød	LT	Z	L	Ød
460003	-				-				-				-				-				-			
460004	-				-				-				-				1334	121.5	105	65	1334	121.5	105	1"3/8
460005	1348	64	50	28	1348	64	82	42	1378	94	82	42	1378	94	106	1"3/8	1405.5				1405.5			

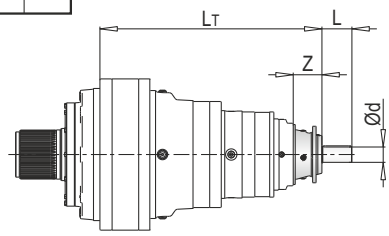

PL	EP 65				ET 90			
	LT	Z	L	Ød	LT	Z	L	Ød
460003	-				1277	171.5	170	90
460004	1365.5	153	105	65	1384			
460005	1437				-			

PL	~ Kg							
	EL C 28	EL C 42	EML 42	EML 1"3/8 Z6	EM 65	EM 1"3/8 Z6	EP 65	ET 90
460003	-	-	-	-	-	-	-	2609
460004	-	-	-	-	2605	2605	2614	2636
460005	2608	2608	2611	2611	2619	2619	2628	-

PL 460000 MS - Sonsuz Dişlili Redüktör Adaptörleri (PMRV/PRV) / Worm Gearbox Adaptors (PMRV/PRV) / Anschluss Für Schneckengetriebe (PMRV/PRV) / Predisposizioni Per Riduttori A Vite Senza Fine (PMRV/PRV) / Adaptation Pour Reducteurs A Vis Sans Fin (PMRV/PRV) / Acoplamiento Para Reductores De Tornillo Sin Fin (PMRV/PRV)

PL	PMRV/PRV 050					PMRV/PRV 063					PMRV/PRV 075				
	LM	l	h	MA	G	LM	l	h	MA	G	LM	l	h	MA	G
460004	-					-					-				
460005	1405.5	50	110	60	80	1415	63	113	72	95	1394	75	161	86	112.5

PL	PMRV/PRV 090					PMRV/PRV 110					PMRV/PRV 130				
	LM	l	h	MA	G	LM	l	h	MA	G	LM	l	h	MA	G
460004	-					1346.5	110	237.5	127.5	160	1352	130	277.5	147.5	180
460005	1404	90	193	103	129.5	1418					1423.5				

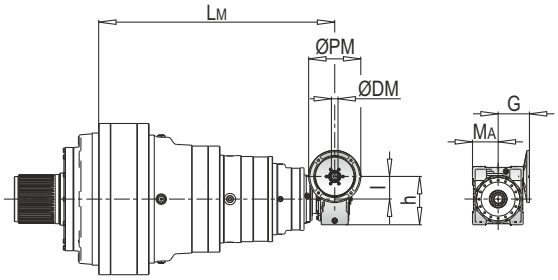

ØPM
ØDM
105

PL	PMRV/PRV 150				
	LM	l	h	MA	G
460004	1368.5	150	320	170	210
460005	1440				

PL	PMRV/PRV ~ Kg						
	050	063	075	090	110	130	150
460004	-	-	-	-	2634	2651	2687
460005	2610	2614	2616	2621	2648	2665	2701

PLB 460000 MS - Elektrik Motor Adaptörleri (IEC) / Electric Motor Couplings (IEC) / Anbauvorrichtung Für Elektromotore (IEC) / Predisposizioni Per Motori Elettrici (IEC) / Adaptations Pour Moteurs Electriques (IEC) / Acoplamientos Para Motores Eléctricos (IEC)

PLB	IEC 80				IEC 90				IEC 100				IEC 112			
	A	LT	Z	ØD	A	LT	Z	ØD	A	LT	Z	ØD	A	LT	Z	ØD
460005	1300.5	296	56	200	1300.5	296	56	200	1300.5	306	66	250	1300.5	306	66	250

PLB	IEC 132				IEC 160				IEC 180			
	A	LT	Z	ØD	A	LT	Z	ØD	A	LT	Z	ØD
460005	1300.5	340	100	300	1300.5	379	139	350	1300.5	379	139	350

PLB	IEC ~ Kg						
	80	90	100	112	132	160	180
460005	2609	2609	2610	2610	2614	2624	2624

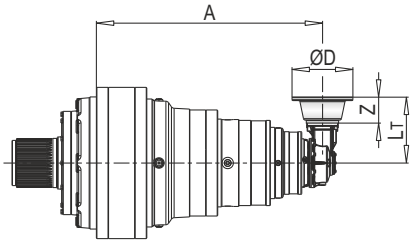

103

PLB 460000 MS - Giriş Milleri / Input Shafts / Antriebswellen / Alberi Entrata / Arbres D'entree / Ejes De Entrada

PLB	EM 65					EM 1"3/8 Z6					EP 65				
	A	LT	Z	L	Ød	A	LT	Z	L	Ød	A	LT	Z	L	Ød
460005	1300.5	1405.5	121.5	105	65	1300.5	1405.5	121.5	105	1"3/8	1300.5	1437	153	105	65

PLB	~ Kg		
	EM 65	EM 1"3/8 Z6	EP 65
460005	2619	2619	2627

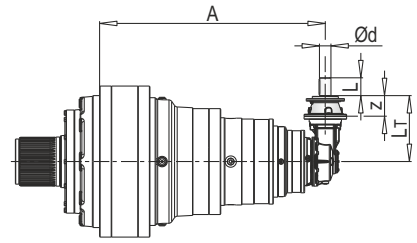

Ød
88-90

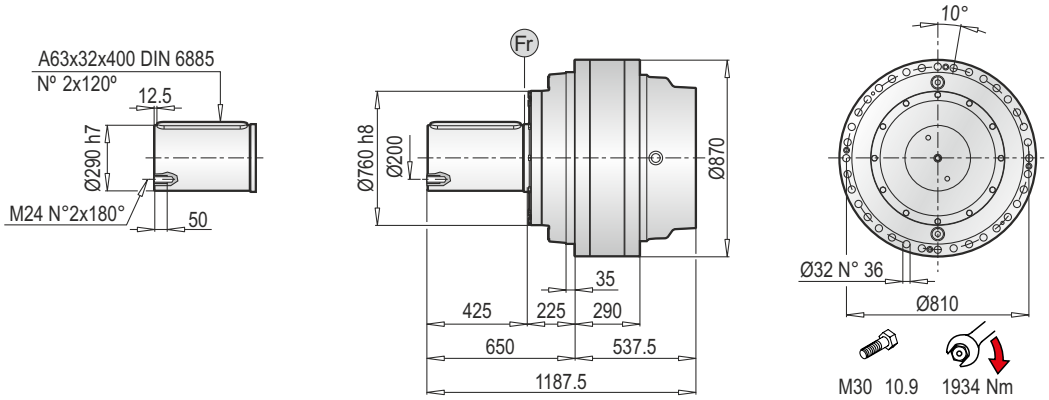

PL 460000 MC - Elektrik Motor Adaptörleri (IEC) / Electrıc Motor Couplings (IEC) / Anbauvorrichtung Für Elektromotore (IEC) / Predisposizioni Per Motori Elettrici (IEC) / Adaptations Pour Moteurs Electriques (IEC) / Acoplamientos Para Motores Eléctricos (IEC)

PL	IEC 63			IEC 71			IEC 80			IEC 90			IEC 100			IEC 112			IEC 132		
	LT	Z	ØD	LT	Z	ØD	LT	Z	ØD	LT	Z	ØD	LT	Z	ØD	LT	Z	ØD	LT	Z	ØD
460001	-			-			-			-			-			-			-		
460002	-			-			-			-			-			-			-		
460003	-			-			-			-			-			-			-		
460004	-			-			-			-			-			-			-		
460005	1320	36	140	1320	36	160	1340	56	200	1340	56	200	1350	66	250	1350	66	250	1384	100	300

PL	IEC 160			IEC 180			IEC 200			IEC 225			IEC 250			IEC 280		
	LT	Z	ØD	LT	Z	ØD	LT	Z	ØD	LT	Z	ØD	LT	Z	ØD	LT	Z	ØD
460001	687.5			687.5			687.5			676.5			676.5			676.5		
460002	1034.5	150		1034.5	150		1034.5	150		1023.5	139		1023.5	139		1023.5	139	
460003	1255.5		350	1255.5		350	1255.5		400	1244.5		450	1244.5		550	1244.5		550
460004	1330.5	118		1330.5	118		1360.5	148		1351.5			1361	148.5		1361	148.5	
460005	1423	139		1423	139		-			-			-			-		

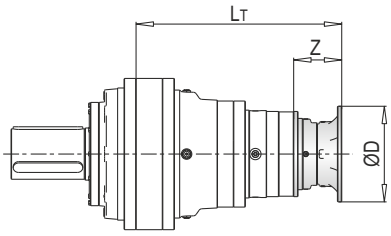

PL	IEC ~ Kg												
	63	71	80	90	100	112	132	160	180	200	225	250	280
460001	-	-	-	-	-	-	-	2085	2085	2090	2096	2108	2120
460002	-	-	-	-	-	-	-	2490	2490	2495	2501	2513	2525
460003	-	-	-	-	-	-	-	2606	2606	2611	2617	2629	2641
460004	-	-	-	-	-	-	-	2610	2610	2620	2625	2666	2668
460005	2607	2607	2609	2609	2610	2610	2614	2624	2624	-	-	-	-

PL 460000 MC - Giriş Milleri / Input Shafts / Antriebswellen / Alberi Entrata / Arbres D'entree / Ejes De Entrada

PL	EL C 28				EL C 42				EML 42				EML 1"3/8 Z6				EM 65				EM 1"3/8 Z6			
	LT	Z	L	Ød	LT	Z	L	Ød	LT	Z	L	Ød	LT	Z	L	Ød	LT	Z	L	Ød	LT	Z	L	Ød
460003	-				-				-				-				-				-			
460004	-				-				-				-				1334	121.5	105	65	1334	121.5	105	1"3/8
460005	1348	64	50	28	1348	64	82	42	1378	94	82	42	1378	94	106	1"3/8	1405.5				1405.5			

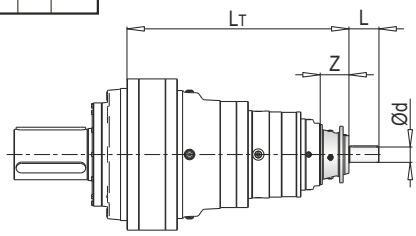

PL	EP 65				ET 90			
	LT	Z	L	Ød	LT	Z	L	Ød
460003	-				1277	171.5	170	90
460004	1365.5	153	105	65	1384			
460005	1437				-			

PL	~ Kg							
	EL C 28	EL C 42	EML 42	EML 1"3/8 Z6	EM 65	EM 1"3/8 Z6	EP 65	ET 90
460003	-	-	-	-	-	-	-	2609
460004	-	-	-	-	2605	2605	2614	2636
460005	2608	2608	2611	2611	2619	2619	2628	-

PL 460000 MC - Sonsuz Dişlili Redüktör Adaptörleri (PMRV/PRV) / Worm Gearbox Adaptors (PMRV/PRV) / Anschluss Für Schneckengetriebe (PMRV/PRV) / Predisposizioni Per Riduttori A Vite Senza Fine (PMRV/PRV) / Adaptation Pour Reducteurs A Vis Sans Fin (PMRV/PRV) / Acoplamiento Para Reductores De Tornillo Sin Fin (PMRV/PRV)

PL	PMRV/PRV 050					PMRV/PRV 063					PMRV/PRV 075				
	LM	l	h	MA	G	LM	l	h	MA	G	LM	l	h	MA	G
460004	-					-					-				
460005	1405.5	50	110	60	80	1415	63	113	72	95	1394	75	161	86	112.5

PL	PMRV/PRV 090					PMRV/PRV 110					PMRV/PRV 130				
	LM	l	h	MA	G	LM	l	h	MA	G	LM	l	h	MA	G
460004	-					1346.5	110	237.5	127.5	160	1352	130	277.5	147.5	180
460005	1404	90	193	103	129.5	1418					1423.5				

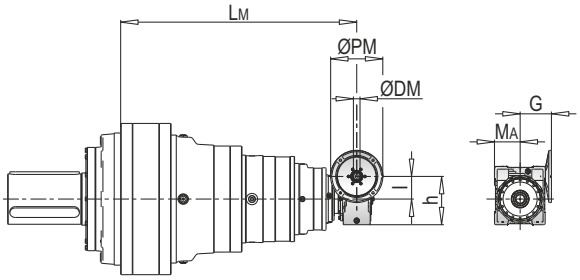

ØPM
ØDM
105

PL	PMRV/PRV 150				
	LM	l	h	MA	G
460004	1368.5	150	320	170	210
460005	1440				

PL	PMRV/PRV ~ Kg						
	050	063	075	090	110	130	150
460004	-	-	-	-	2634	2651	2687
460005	2610	2614	2616	2621	2648	2665	2701

PLB 460000 MC - Elektrik Motor Adaptörleri (IEC) / Electric Motor Couplings (IEC) / Anbauvorrichtung Für Elektromotore (IEC) / Predisposizioni Per Motori Elettrici (IEC) / Adaptations Pour Moteurs Electriques (IEC) / Acoplamientos Para Motores Eléctricos (IEC)

PLB	IEC 80				IEC 90				IEC 100				IEC 112			
	A	LT	Z	ØD	A	LT	Z	ØD	A	LT	Z	ØD	A	LT	Z	ØD
460005	1300.5	296	56	200	1300.5	296	56	200	1300.5	306	66	250	1300.5	306	66	250

PLB	IEC 132				IEC 160				IEC 180			
	A	LT	Z	ØD	A	LT	Z	ØD	A	LT	Z	ØD
460005	1300.5	340	100	300	1300.5	379	139	350	1300.5	379	139	350

PLB	IEC ~ Kg						
	80	90	100	112	132	160	180
460005	2609	2609	2610	2610	2614	2624	2624

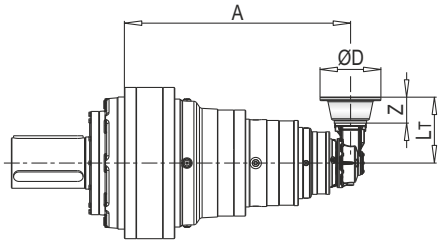

103

PLB 460000 MC - Giriş Milleri / Input Shafts / Antriebswellen / Alberi Entrata / Arbres D'entree / Ejes De Entrada

PLB	EM 65					EM 1"3/8 Z6					EP 65				
	A	LT	Z	L	Ød	A	LT	Z	L	Ød	A	LT	Z	L	Ød
460005	1300.5	1405.5	121.5	105	65	1300.5	1405.5	121.5	105	1"3/8	1300.5	1437	153	105	65

PLB	~ Kg		
	EM 65	EM 1"3/8 Z6	EP 65
460005	2619	2619	2627

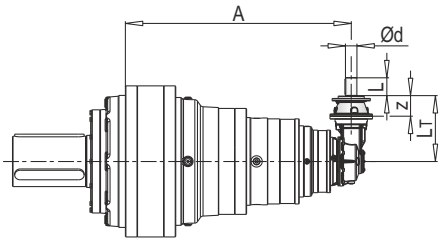

Ød
88-90

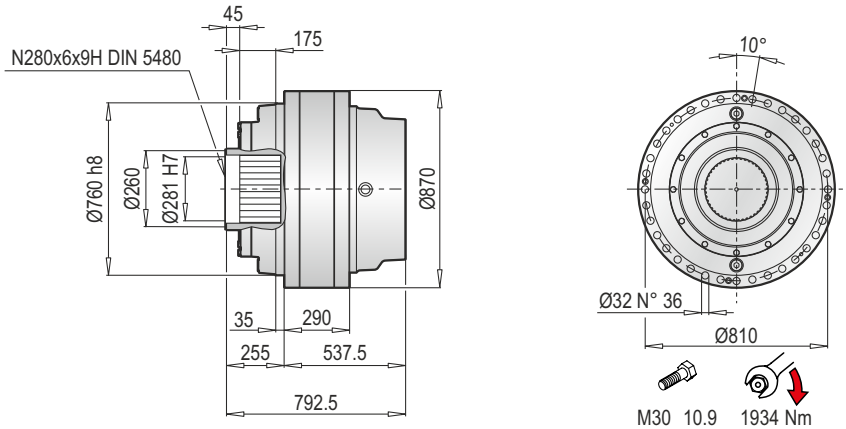

PL 460000 F - Elektrik Motor Adaptörleri (IEC) / Electrıc Motor Couplings (IEC) /Anbauvorrichtung Für Elektromotore (IEC) / Predisposizioni Per Motori Elettrici (IEC) / Adaptations Pour Moteurs Electriques (IEC) /Acoplamientos Para Motores Eléctricos (IEC)

PL	IEC 63			IEC 71			IEC 80			IEC 90			IEC 100			IEC 112			IEC 132		
	LT	Z	ØD	LT	Z	ØD	LT	Z	ØD	LT	Z	ØD	LT	Z	ØD	LT	Z	ØD	LT	Z	ØD
460001	-			-			-			-			-			-			-		
460002	-			-			-			-			-			-			-		
460003	-			-			-			-			-			-			-		
460004	-			-			-			-			-			-			-		
460005	1320	36	140	1320	36	160	1340	56	200	1340	56	200	1350	66	250	1350	66	250	1384	100	300

PL	IEC 160			IEC 180			IEC 200			IEC 225			IEC 250			IEC 280		
	LT	Z	ØD	LT	Z	ØD	LT	Z	ØD	LT	Z	ØD	LT	Z	ØD	LT	Z	ØD
460001	687.5	150	350	687.5	150	350	687.5	150	400	676.5	139	450	676.5	139	550	676.5	139	550
460002	1034.5			1034.5			1034.5			1023.5			1023.5			1023.5		
460003	1255.5			1255.5			1255.5			1244.5			1244.5			1244.5		
460004	1330.5	118		1330.5	118		1360.5	148		1351.5			1361	148.5		1361	148.5	
460005	1423	139		1423	139		-			-			-			-		

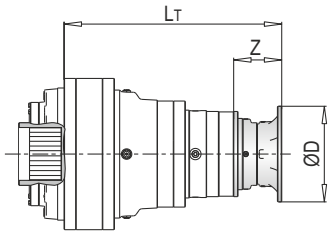

PL	IEC ~ Kg												
	63	71	80	90	100	112	132	160	180	200	225	250	280
460001	-	-	-	-	-	-	-	1935	1935	1940	1946	1958	1970
460002	-	-	-	-	-	-	-	2340	2340	2345	2351	2363	2375
460003	-	-	-	-	-	-	-	2456	2456	2461	2467	2479	2491
460004	-	-	-	-	-	-	-	2460	2460	2470	2475	2516	2518
460005	2457	2457	2459	2459	2460	2460	2464	2474	2474	-	-	-	-

PL 460000 F - Giriş Milleri / Input Shafts / Antriebswellen / Alberi Entrata / Arbres D'entree / Ejes De Entrada

PL	EL C 28				EL C 42				EML 42				EML 1"3/8 Z6				EM 65				EM 1"3/8 Z6			
	LT	Z	L	Ød	LT	Z	L	Ød	LT	Z	L	Ød	LT	Z	L	Ød	LT	Z	L	Ød	LT	Z	L	Ød
460003	-				-				-				-				-				-			
460004	-				-				-				-				1334	121.5	105	65	1334	121.5	105	1"3/8
460005	1348	64	50	28	1348	64	82	42	1378	94	82	42	1378	94	106	1"3/8	1405.5				1405.5			

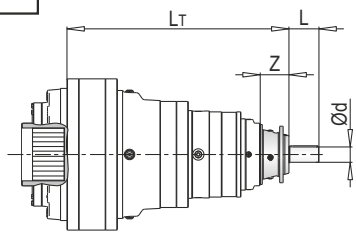

PL	EP 65				ET 90			
	LT	Z	L	Ød	LT	Z	L	Ød
460003	-				1277	171.5	170	90
460004	1365.5	153	105	65	1384			
460005	1437				-			

PL	~ Kg							
	EL C 28	EL C 42	EML 42	EML 1"3/8 Z6	EM 65	EM 1"3/8 Z6	EP 65	ET 90
460003	-	-	-	-	-	-	-	2459
460004	-	-	-	-	2455	2455	2464	2486
460005	2458	2458	2461	2461	2469	2469	2478	-

PL 460000 F - Sonsuz Dişlili Redüktör Adaptörleri (PMRV/PRV) / Worm Gearbox Adaptors (PMRV/PRV) / Anschluss Für Schneckengetriebe (PMRV/PRV) / Predisposizioni Per Riduttori A Vite Senza Fine (PMRV/PRV) / Adaptation Pour Reducteurs A Vis Sans Fin (PMRV/PRV) / Acoplamiento Para Reductores De Tornillo Sin Fin (PMRV/PRV)

PL	PMRV/PRV 050					PMRV/PRV 063					PMRV/PRV 075				
	LM	l	h	MA	G	LM	l	h	MA	G	LM	l	h	MA	G
460004	-					-					-				
460005	1405.5	50	110	60	80	1415	63	113	72	95	1394	75	161	86	112.5

PL	PMRV/PRV 090					PMRV/PRV 110					PMRV/PRV 130				
	LM	l	h	MA	G	LM	l	h	MA	G	LM	l	h	MA	G
460004	-					1346.5	110	237.5	127.5	160	1352	130	277.5	147.5	180
460005	1404	90	193	103	129.5	1418					1423.5				

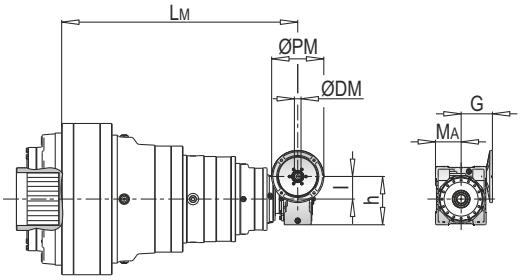

ØPM
ØDM
105

PL	PMRV/PRV 150				
	LM	l	h	MA	G
460004	1368.5	150	320	170	210
460005	1440				

PL	PMRV/PRV ~ Kg						
	050	063	075	090	110	130	150
460004	-	-	-	-	2484	2501	2537
460005	2460	2464	2466	2471	2498	2515	2551

PLB 460000 F - Elektrik Motor Adaptörleri (IEC) / Electric Motor Couplings (IEC) / Anbauvorrichtung Für Elektromotore (IEC) / Predisposizioni Per Motori Elettrici (IEC) / Adaptations Pour Moteurs Electriques (IEC) / Acoplamientos Para Motores Eléctricos (IEC)

PLB	IEC 80				IEC 90				IEC 100				IEC 112			
	A	LT	Z	ØD	A	LT	Z	ØD	A	LT	Z	ØD	A	LT	Z	ØD
460005	1300.5	296	56	200	1300.5	296	56	200	1300.5	306	66	250	1300.5	306	66	250

PLB	IEC 132				IEC 160				IEC 180			
	A	LT	Z	ØD	A	LT	Z	ØD	A	LT	Z	ØD
460005	1300.5	340	100	300	1300.5	379	139	350	1300.5	379	139	350

PLB	IEC ~ Kg						
	80	90	100	112	132	160	180
460005	2459	2459	2460	2460	2464	2474	2474

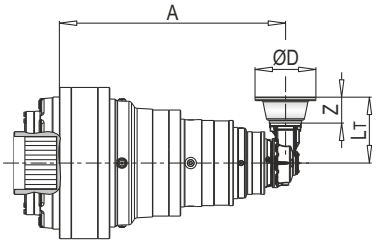

103

PLB 460000 F - Giriş Milleri / Input Shafts / Antriebswellen / Alberi Entrata / Arbres D'entree / Ejes De Entrada

PLB	EM 65					EM 1"3/8 Z6					EP 65				
	A	LT	Z	L	Ød	A	LT	Z	L	Ød	A	LT	Z	L	Ød
460005	1300.5	1405.5	121.5	105	65	1300.5	1405.5	121.5	105	1"3/8	1300.5	1437	153	105	65

PLB	~ Kg		
	EM 65	EM 1"3/8 Z6	EP 65
460005	2469	2469	2477

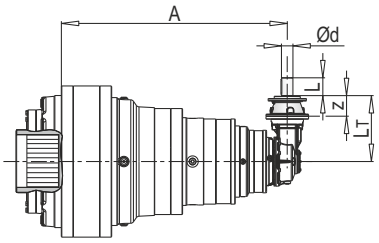

Ød 88-90

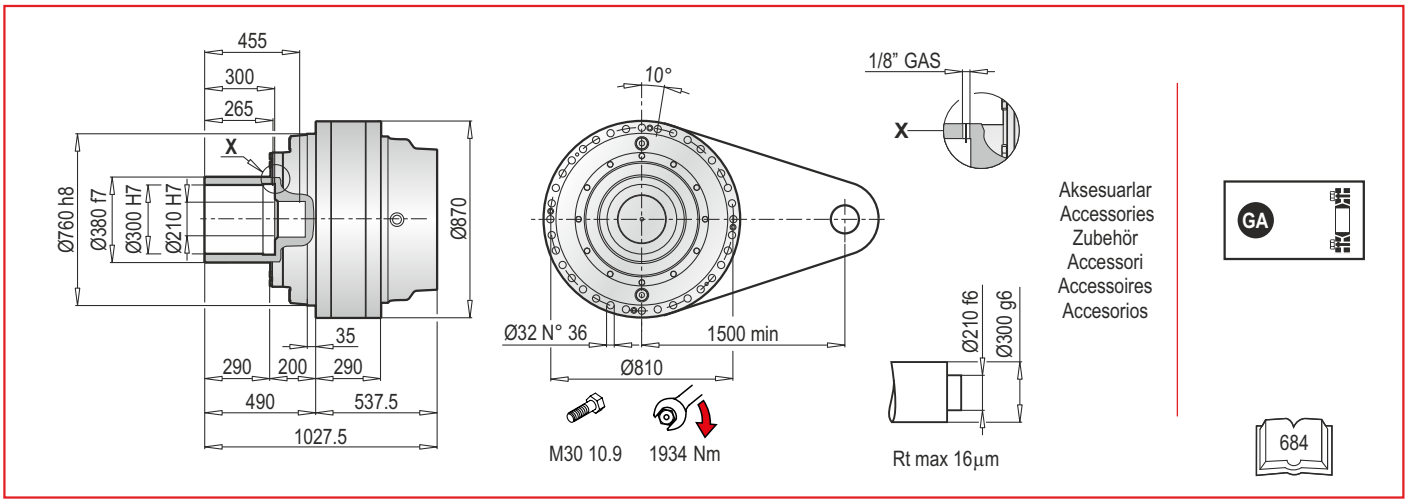

PL 460000 FS - Elektrik Motor Adaptörleri (IEC) / Electrıc Motor Couplings (IEC) / Anbauvorrichtung Für Elektromotore (IEC) / Predisposizioni Per Motori Elettrici (IEC) / Adaptations Pour Moteurs Electriques (IEC) / Acoplamientos Para Motores Eléctricos (IEC)

PL	IEC 63			IEC 71			IEC 80			IEC 90			IEC 100			IEC 112			IEC 132		
	LT	Z	ØD	LT	Z	ØD	LT	Z	ØD	LT	Z	ØD	LT	Z	ØD	LT	Z	ØD	LT	Z	ØD
460001	-			-			-			-			-			-			-		
460002	-			-			-			-			-			-			-		
460003	-			-			-			-			-			-			-		
460004	-			-			-			-			-			-			-		
460005	1320	36	140	1320	36	160	1340	56	200	1340	56	200	1350	66	250	1350	66	250	1384	100	300

PL	IEC 160			IEC 180			IEC 200			IEC 225			IEC 250			IEC 280		
	LT	Z	ØD	LT	Z	ØD	LT	Z	ØD	LT	Z	ØD	LT	Z	ØD	LT	Z	ØD
460001	687.5	150	350	687.5	150	350	687.5	150	400	676.5	139	450	676.5	139	550	676.5	139	550
460002	1034.5			1034.5			1034.5			1023.5			1023.5			1023.5		
460003	1255.5			1255.5			1255.5			1244.5			1244.5			1244.5		
460004	1330.5	118		1330.5	118		1360.5	148		1351.5			1361	148.5		1361	148.5	
460005	1423	139		1423	139		-			-			-			-		

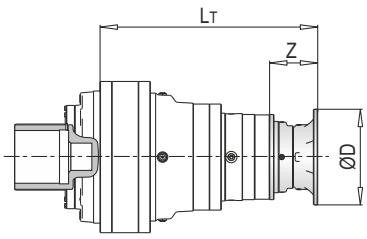

PL	IEC ~ Kg												
	63	71	80	90	100	112	132	160	180	200	225	250	280
460001	-	-	-	-	-	-	-	1973	1973	1978	1984	1996	2008
460002	-	-	-	-	-	-	-	2378	2378	2383	2389	2401	2413
460003	-	-	-	-	-	-	-	2494	2494	2499	2505	2517	2529
460004	-	-	-	-	-	-	-	2521	2521	2526	2532	2544	2556
460005	2495	2495	2497	2497	2498	2498	2503	2535	2535	2540	2546	2558	2570

PL 460000 FS - Giriş Milleri / Input Shafts / Antriebswellen / Alberi Entrata / Arbres D'entree / Ejes De Entrada

PL	EL C 28				EL C 42				EML 42				EML 1"3/8 Z6				EM 65				EM 1"3/8 Z6			
	LT	Z	L	Ød	LT	Z	L	Ød	LT	Z	L	Ød	LT	Z	L	Ød	LT	Z	L	Ød	LT	Z	L	Ød
460003	-				-				-				-				-				-			
460004	-				-				-				-				1334	121.5	105	65	1334	121.5	105	1"3/8
460005	1348	64	50	28	1348	64	82	42	1378	94	82	42	1378	94	106	1"3/8	1405.5				1405.5			

PL	EP 65				ET 90			
	LT	Z	L	Ød	LT	Z	L	Ød
460003	-				1277	171.5	170	90
460004	1365.5	153	105	65	1384			
460005	1437				-			

PL	~ Kg							
	EL C 28	EL C 42	EML 42	EML 1"3/8 Z6	EM 65	EM 1"3/8 Z6	EP 65	ET 90
460003	-	-	-	-	-	-	-	2497
460004	-	-	-	-	2493	2493	2502	2524
460005	2496	2496	2499	2499	2507	2507	2516	-

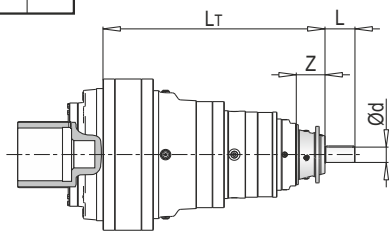

PL 460000 FS - Sonsuz Dişlili Redüktör Adaptörleri (PMRV/PRV) / Worm Gearbox Adaptors (PMRV/PRV) / Anschluss Für Schneckengetriebe (PMRV/PRV) / Predisposizioni Per Riduttori A Vite Senza Fine (PMRV/PRV) / Adaptation Pour Reducteurs A Vis Sans Fin (PMRV/PRV) / Acoplamiento Para Reductores De Tornillo Sin Fin (PMRV/PRV)

PL	PMRV/PRV 050					PMRV/PRV 063					PMRV/PRV 075				
	LM	l	h	MA	G	LM	l	h	MA	G	LM	l	h	MA	G
460004	-					-					-				
460005	1405.5	50	110	60	80	1415	63	113	72	95	1394	75	161	86	112.5

PL	PMRV/PRV 090					PMRV/PRV 110					PMRV/PRV 130				
	LM	l	h	MA	G	LM	l	h	MA	G	LM	l	h	MA	G
460004	-					1346.5	110	237.5	127.5	160	1352	130	277.5	147.5	180
460005	1404	90	193	103	129.5	1418					1423.5				

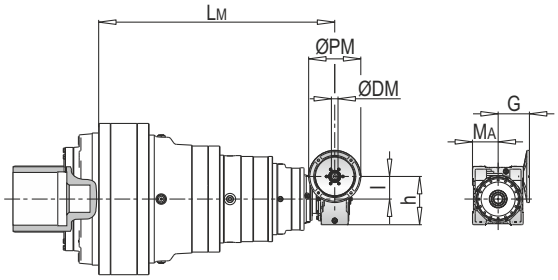

ØPM
ØDM
105

PL	PMRV/PRV 150				
	LM	l	h	MA	G
460004	1368.5	150	320	170	210
460005	1440				

PL	PMRV/PRV ~ Kg						
	050	063	075	090	110	130	150
460004	-	-	-	-	2522	2539	2575
460005	2498	2502	2502	2507	2536	2553	2589

PLB 460000 FS - Elektrik Motor Adaptörleri (IEC) / Electric Motor Couplings (IEC) / Anbauvorrichtung Für Elektromotore (IEC) / Predisposizioni Per Motori Elettrici (IEC) / Adaptations Pour Moteurs Electriques (IEC) / Acoplamientos Para Motores Eléctricos (IEC)

PLB	IEC 80				IEC 90				IEC 100				IEC 112			
	A	LT	Z	ØD	A	LT	Z	ØD	A	LT	Z	ØD	A	LT	Z	ØD
460005	1300.5	296	56	200	1300.5	296	56	200	1300.5	306	66	250	1300.5	306	66	250

PLB	IEC 132				IEC 160				IEC 180			
	A	LT	Z	ØD	A	LT	Z	ØD	A	LT	Z	ØD
460005	1300.5	340	100	300	1300.5	379	139	350	1300.5	379	139	350

PLB	IEC ~ Kg						
	80	90	100	112	132	160	180
460005	2497	2497	2498	2498	2502	2512	2512

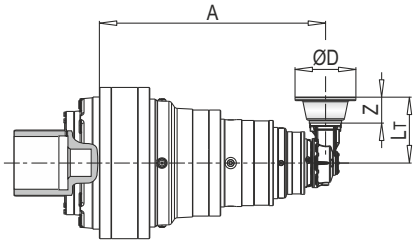

103

PLB 460000 FS - Giriş Milleri / Input Shafts / Antriebswellen / Alberi Entrata / Arbres D'entree / Ejes De Entrada

PLB	EM 65					EM 1"3/8 Z6					EP 65				
	A	LT	Z	L	Ød	A	LT	Z	L	Ød	A	LT	Z	L	Ød
460005	1300.5	1405.5	121.5	105	65	1300.5	1405.5	121.5	105	1"3/8	1300.5	1437	153	105	65

PLB	~ Kg		
	EM 65	EM 1"3/8 Z6	EP 65
460005	2507	2507	2515

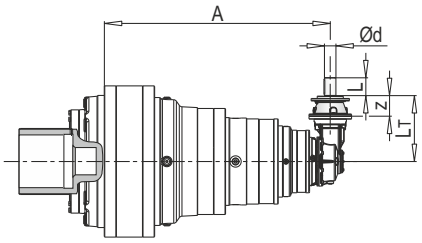

Ød 88-90

AKSESUARLAR / ACCESSORIES / ZUBEHÖR / ACCESSORI / ACCESSOIRES / ACCESORIOS

GA

Konik sıktırma / Shrink disc / Schrumpfscheibe
Giunto di attrito / Frette de serrage / Disco de contracción

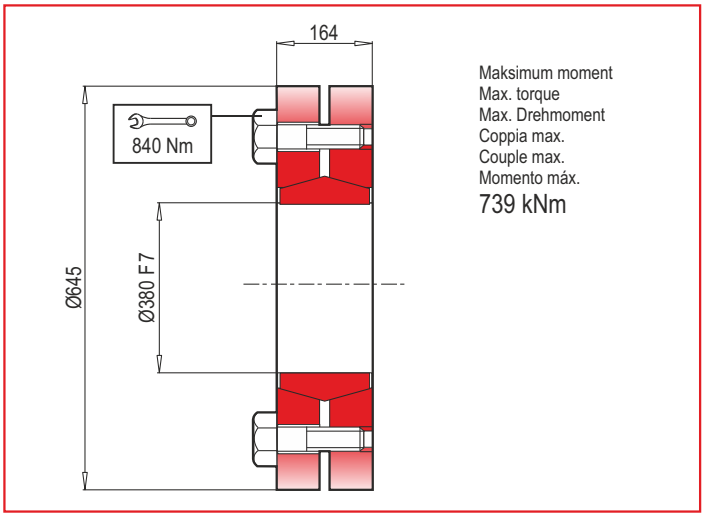

TR RADYAL YÜKLER (Fr)

Aşağıdaki grafikler istenilen $n_2$xh değerinin elde edilmesi için gerekli olan radyal yükleri ve K faktörlerini göstermektedir.

EN RADIAL LOADS (Fr)

The following curves show the radial loads and the K factors to obtain the required n2xh value.

DE RADIALLAST (Fr)

In den nachstehenden Diagrammen ist die Radiallast un der Koeffizient K dargestellt und kann mit dem gewünschten Wert $n_2$xh verglichen werden.

IT CARICHI RADIALI (Fr)

Nei diagrammi seguenti sono riportati i carichi radiali e i coefficienti K per rapportarli al valore $n_2$xh desiderato.

FR CHARGES RADIALES (Fr)

Dans les diagrammes suivants sont indiqués les charges radiales et les facteurs K de façon à obtenir la valeur $n_2$xh désirée.

ES CARGAS RADIALES (Fr)

En los siguientes diagramas se indican las cargas radiales y los coefici - entes K para obtener el valor requerido $n_2$xh.

M

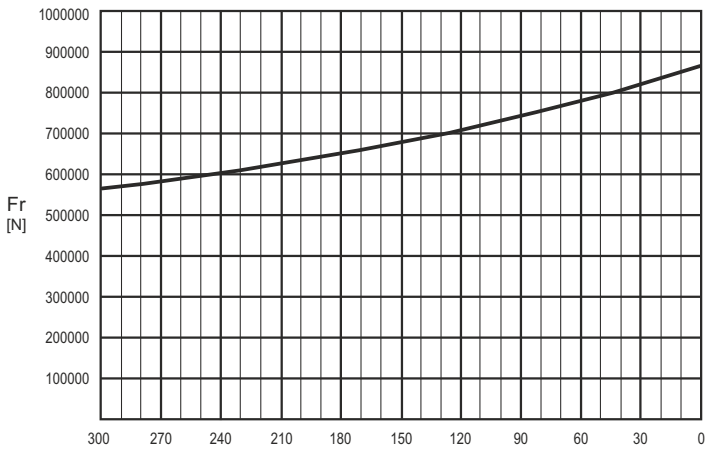

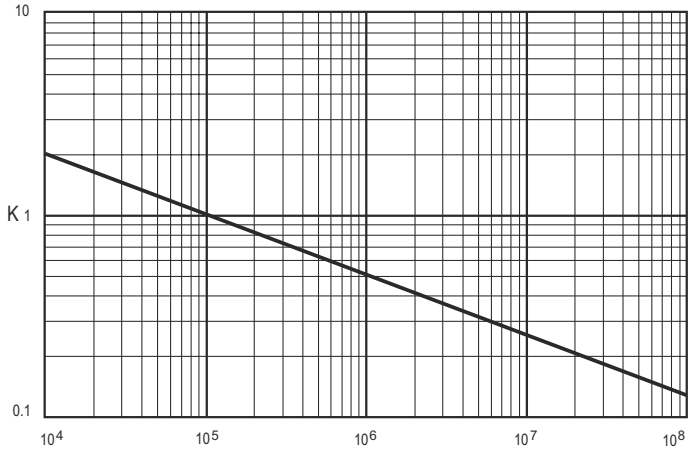

	$n_2$xh				
	10^5	10^4	10^6	10^7	10^8
M	Fr	Fr • K			

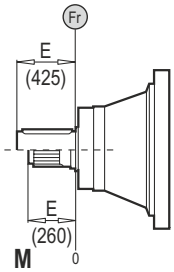

TR EKSENEL YÜKLER (Fa)

Tabloda yer alan eksenel yük değerleri, çıkış tipine ve uygulamanın yük yönüne göre değişir.

EN AXIAL LOADS (Fa)

The values of the axial loads in the table refer to the output versions and load direction of application.

DE AXIALLAST (Fa)

Die dargestellten Werte der Axiallast basieren auf der Version und der applizierten Lastrichtung.

IT CARICHI ASSIALI (Fa)

I valori dei carichi assiali indicati in tabella sono riferiti alle versioni e alla direzione di applicazione del carico.

FR CHARGES AXIALES (Fa)

Les valeurs des charges axiales indiquées dans le tableau se réfèrent aux versions et à la direction d'application de lacharge.

ES CARGAS AXIALES (Fa)

Los valores de las cargas axiales indicados en la tabla se refieren a las versiones y a la dirección de aplicación de la carga.

Fa [N]	M	
	240000	←
	160500	→

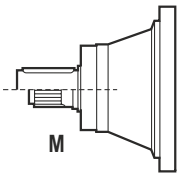

TEKNİK VERİLER / TECHNICAL DATA / TECHNISCHE DATEN / DATI TECNICI / DONNÉES TECHNIQUES / DATOS TÉCNICAS

	i_{ges}	Mmax (n_2 x h: 20000) (Nm)
550001	3.84 ... 5.44	1186800
550002	14.13 ... 26.87	995400
550003	55.88 ... 161.24	827800
550004	198.69 ... 1088.38	756400
550005	1214.55 ... 7890.76	756400

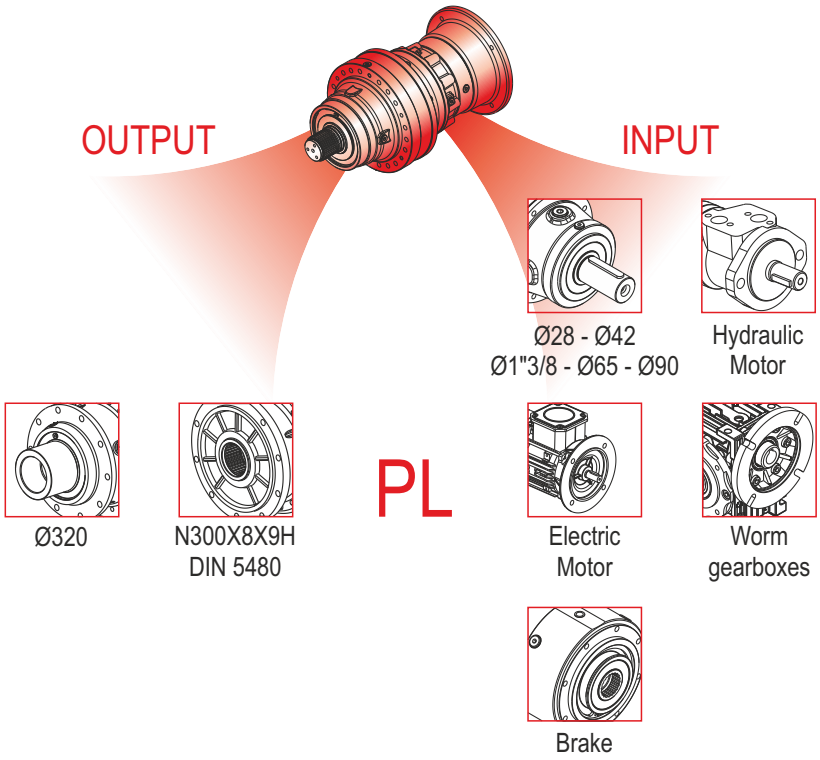

	i_{ges}	Mmax (n_2 x h: 20000) (Nm)
550005	819.22 ... 5079.11	756400

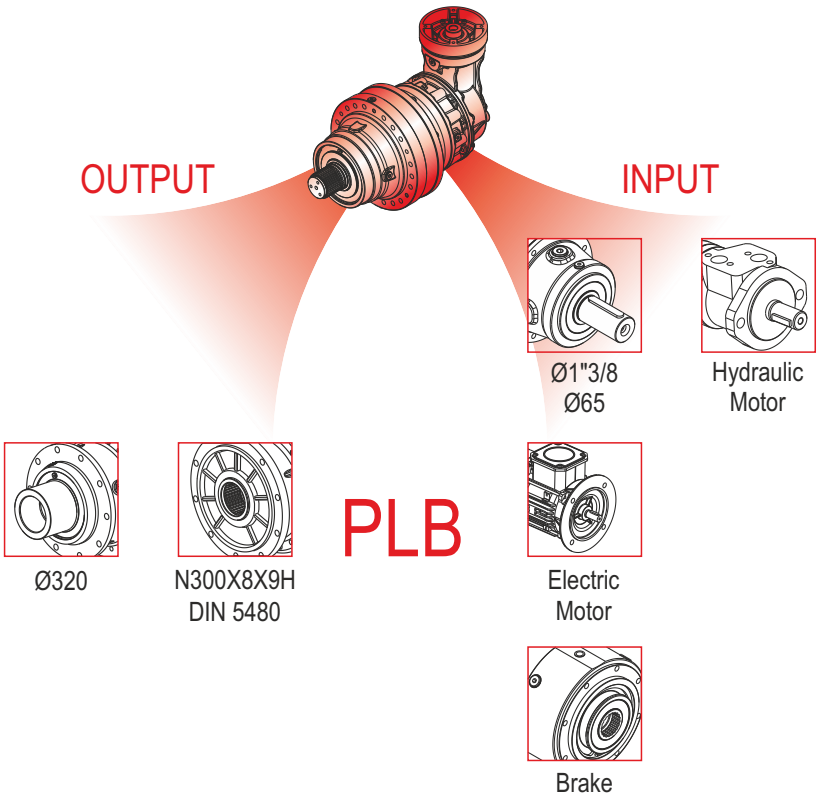

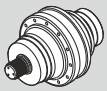	Pt [kW]	n_{1max} [min^{-1}]	i_{ges}	Mc [kNm]				Giriş- Input - Antrieb - Entrata - Entrée - Entrada		
				n_2 x h 10.000	n_2 x h 20.000	n_2 x h 50.000	n_2 x h 100.000	IEC (B5)	PMRV / PRV	EL - EML EM - EP - ET
PL 550001	324	100	3.84 5.44	823.8 467.5	741.7 421.0	645.8 366.5	582.7 344.9	160 | 200 | 250 180 | 225 | 280	-	-
PL 550002	185	200	14.13 18.97 26.87	729.3 525.0 467.5	622.1 472.8 421.0	472.6 411.6 366.5	383.8 370.7 344.9	160 | 200 | 250 180 | 225 | 280	-	-
PL 550003	125	1200	55.88 75.02 96.03 106.27 136.05 161.24	584.5 525.0 525.0 467.5 467.5 467.5	517.3 472.8 472.8 421.0 421.0 421.0	440.2 411.6 410.7 366.5 366.5 366.5	383.8 370.7 363.5 344.9 344.9 344.9	160 | 225 180 | 250 200 | 280	-	ET 90
PL 550004	92	2000	198.69 239.50 266.72 321.50 411.57 455.46 537.79 595.13 691.04 761.87 902.95 1088.38	521.3 454.2 525.0 525.0 525.0 467.5 525.0 467.5 467.5 467.5 467.5 467.5	461.4 402.0 472.8 472.8 472.8 421.0 472.8 421.0 421.0 421.0 421.0 421.0	392.5 342.1 411.6 411.6 410.7 366.5 408.8 366.5 366.5 366.5 366.5 366.5	347.4 302.9 370.7 370.7 363.5 344.9 362.0 344.9 344.9 344.9 344.9 344.9	160 180 200 225 250 280	110 130 150	EM 65 EM 1"3/8 Z6 EP 65 ET 90
PL 550005	75	2800	1214.55 1326.18 1408.49 1486.43 1554.83 1640.86 1752.98 1861.79 1952.27 2031.64 2126.46 2218.38 2364.88 2499.24 2660.01 2778.57 2878.16 3226.73 4489.57 5010.01 6546.41 7890.76	525.0 525.0 525.0 467.5 525.0 467.5 467.5 467.5 467.5 525.0 525.0 525.0 467.5 467.5 463.0 525.0 467.5 525.0 467.5 467.5 467.5 467.5	472.8 472.8 472.8 421.0 472.8 421.0 419.3 421.0 421.0 472.8 472.8 472.8 421.0 421.0 409.7 472.8 421.0 472.8 421.0 421.0 421.0 421.0	411.6 411.6 410.7 366.5 410.7 366.5 356.6 366.5 366.5 408.8 410.7 408.8 366.5 366.5 348.6 408.8 366.5 408.8 366.5 366.5 366.5 366.5	370.7 369.5 363.5 344.9 363.5 344.9 315.9 331.9 344.9 362.0 363.5 362.0 344.9 344.9 308.8 362.0 344.9 362.0 344.9 344.9 344.9 344.9	160 180 200 225 250 280	050 063 075 090 110 130 150	EL C 28 EL C 42 EML 42 EML 1"3/8 Z6 EM 65 EM 1"3/8 Z6 EP 65

	Pt [kW]	n_{1max} [min^{-1}]	i_{ges}	Mc [kNm]				Giriş- Input - Antrieb - Entrata - Entrée - Entrada	
				n_2 x h	n_2 x h	n_2 x h	n_2 x h		
				10.000	20.000	50.000	100.000	IEC (B5)	EL - EML EM - EP - ET
PLB 550005	73	2500	819.22	525.0	432.3	328.4	266.8	160 180 200 225 250 280	EM 65 EM 1"3/8 Z6 EP 65
			864.55	467.5	421.0	341.1	277.1		
			987.46	525.0	472.8	374.3	304.2		
			1160.57	467.5	421.0	366.5	340.6		
			1244.71	485.6	394.2	299.3	243.0		
			1334.06	467.5	421.0	366.5	344.9		
			1398.90	467.5	421.0	366.5	344.9		
			1500.32	525.0	449.3	341.1	276.9		
			1593.45	525.0	468.7	355.8	288.9		
			1743.17	467.5	421.0	366.5	344.9		
			1827.89	467.5	421.0	366.5	344.9		
			1920.67	525.0	472.8	405.5	329.2		
			2125.46	467.5	421.0	366.5	344.9		
			2340.02	467.5	421.0	366.5	344.9		
			2509.68	525.0	472.8	408.8	362.0		
			2820.56	467.5	421.0	366.5	344.9		
			3224.83	467.5	421.0	366.5	344.9		
			4213.78	467.5	421.0	366.5	344.9		
			5079.11	467.5	421.0	366.5	344.9		

⚠

(n_2 x h = 20.000)

$$M_{max} = M_C \times 1.6$$

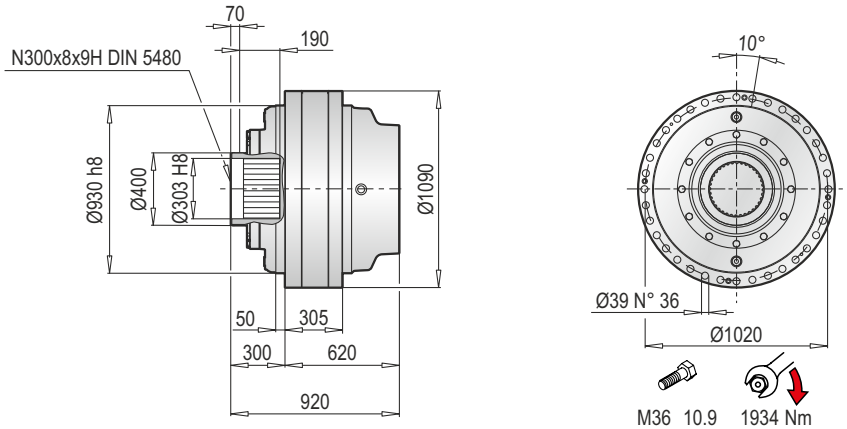

PL 550000 F - Elektrik Motor Adaptörleri (IEC) / Electrıc Motor Couplings (IEC) /Anbauvorrichtung Für Elektromotore (IEC) / Predisposizioni Per Motori Elettrici (IEC) / Adaptations Pour Moteurs Electriques (IEC) /Acoplamientos Para Motores Eléctricos (IEC)

PL	IEC 160			IEC 180			IEC 200			IEC 225			IEC 250			IEC 280		
	LT	Z	ØD	LT	Z	ØD	LT	Z	ØD	LT	Z	ØD	LT	Z	ØD	LT	Z	ØD
550001	770	150	350	770	150	350	770	150	400	759	139	450	759	139	550	759	139	550
550002	1053.5			1053.5			1053.5			1042.5			1042.5			1042.5		
550003	1274.5			1274.5			1274.5			1263.5			1263.5			1263.5		
550004	1381.5			1381.5			1381.5			1370.5			1370.5			1370.5		
550005	1421	118		1421	118		1451	148		1442			1451.5	148.5		1451.5	148.5	

PL	IEC ~ Kg					
	160	180	200	225	250	280
550001	3260	3260	3265	3271	3283	3295
550002	3770	3770	3775	3781	3793	3805
550003	3965	3965	3970	3976	3988	4000
550004	4024	4024	4029	4035	4047	4059
550005	4022	4022	4032	4037	4078	4080

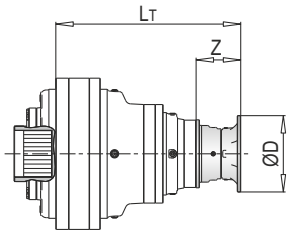

PL 550000 F - Giriş Milleri / Input Shafts / Antriebswellen / Alberi Entrata / Arbres D'entree / Ejes De Entrada

PL	EL C 28				EL C 42				EML 42				EML 1"3/8 Z6				EM 65				EM 1"3/8 Z6			
	LT	Z	L	Ød	LT	Z	L	Ød	LT	Z	L	Ød	LT	Z	L	Ød	LT	Z	L	Ød	LT	Z	L	Ød
550003	-				-				-				-				-				-			
550004	-				-				-				-				1353	121.5	105	65	1353	121.5	105	1"3/8
550005	1367	64	50	28	1367	64	82	42	1397	94	82	42	1397	94	106	1"3/8	1424.5				1424.5			

PL	EP 65				ET 90			
	LT	Z	L	Ød	LT	Z	L	Ød
550003	-				1296	171.5	170	90
550004	1384.5	153	105	65	1403			
550005	1456				-			

PL	~ Kg							
	EL C 28	EL C 42	EML 42	EML 1"3/8 Z6	EM 65	EM 1"3/8 Z6	EP 65	ET 90
550003	-	-	-	-	-	-	-	3968
550004	-	-	-	-	3996	3996	4005	4027
550005	4006	4006	4009	4009	4017	4017	4026	-

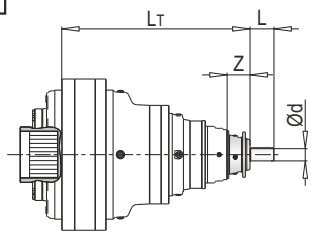

PL 550000 F - Sonsuz Dişlili Redüktör Adaptörleri (PMRV/PRV) / Worm Gearbox Adaptors (PMRV/PRV) / Anschluss Für Schneckengetriebe (PMRV/PRV) / Predisposizioni Per Riduttori A Vite Senza Fine (PMRV/PRV) / Adaptation Pour Reducteurs A Vis Sans Fin (PMRV/PRV) / Acoplamiento Para Reductores De Tornillo Sin Fin (PMRV/PRV)

PL	PMRV/PRV 050					PMRV/PRV 063					PMRV/PRV 075				
	LM	l	h	MA	G	LM	l	h	MA	G	LM	l	h	MA	G
550004	-					-					-				
550005	1424.5	50	110	60	80	1434	63	113	72	95	1413	75	161	86	112.5

PL	PMRV/PRV 090					PMRV/PRV 110					PMRV/PRV 130				
	LM	l	h	MA	G	LM	l	h	MA	G	LM	l	h	MA	G
550004	-					1365.5	110	237.5	127.5	160	1371	130	277.5	147.5	180
550005	1423	90	193	103	129.5	1437					1442.5				

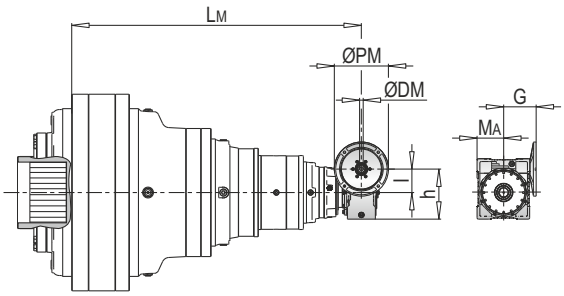

ØPM
ØDM
105

PL	PMRV/PRV 150				
	LM	l	h	MA	G
550004	1387.5	150	320	170	210
550005	1459				

PL	PMRV/PRV ~ Kg						
	050	063	075	090	110	130	150
550004	-	-	-	-	4025	4042	4078
550005	4008	4012	4014	4019	4046	4063	4099

PLB 550000 F - Elektrik Motor Adaptörleri (IEC) / Electric Motor Couplings (IEC) / Anbauvorrichtung Für Elektromotore (IEC) / Predisposizioni Per Motori Elettrici (IEC) / Adaptations Pour Moteurs Electriques (IEC) / Acoplamientos Para Motores Eléctricos (IEC)

PLB	IEC 160				IEC 180				IEC 200				IEC 225			
	A	LT	Z	ØD	A	LT	Z	ØD	A	LT	Z	ØD	A	LT	Z	ØD
550005	1366.5	1421	118	350	1366.5	1421	118	350	1366.5	1451	148	400	1366.5	1442	139	450

PLB	IEC 250				IEC 280			
	A	LT	Z	ØD	A	LT	Z	ØD
550005	1366.5	1451.5	148.5	550	1366.5	1451.5	148.5	550

PLB	IEC ~ Kg					
	160	180	200	225	250	280
550005	4022	4022	4032	4037	4078	4090

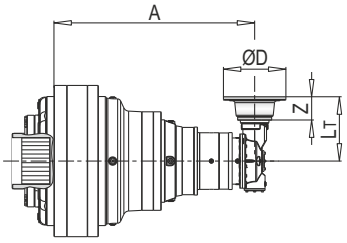

103

PLB 550000 F - Giriş Milleri / Input Shafts / Antriebswellen / Alberi Entrata / Arbres D'entree / Ejes De Entrada

PLB	EM 65					EM 1"3/8 Z6					EP 65				
	A	LT	Z	L	Ød	A	LT	Z	L	Ød	A	LT	Z	L	Ød
550005	1366.5	436.5	121.5	105	65	1366.5	436.5	121.5	105	1"3/8	1366.5	468	153	105	65

PLB	~ Kg		
	EM 65	EM 1"3/8 Z6	EP 65
550005	4017	4017	4026

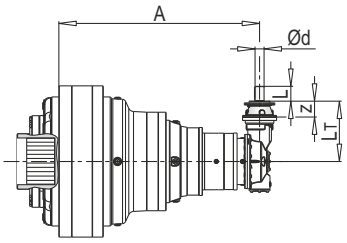

Ød
88-90

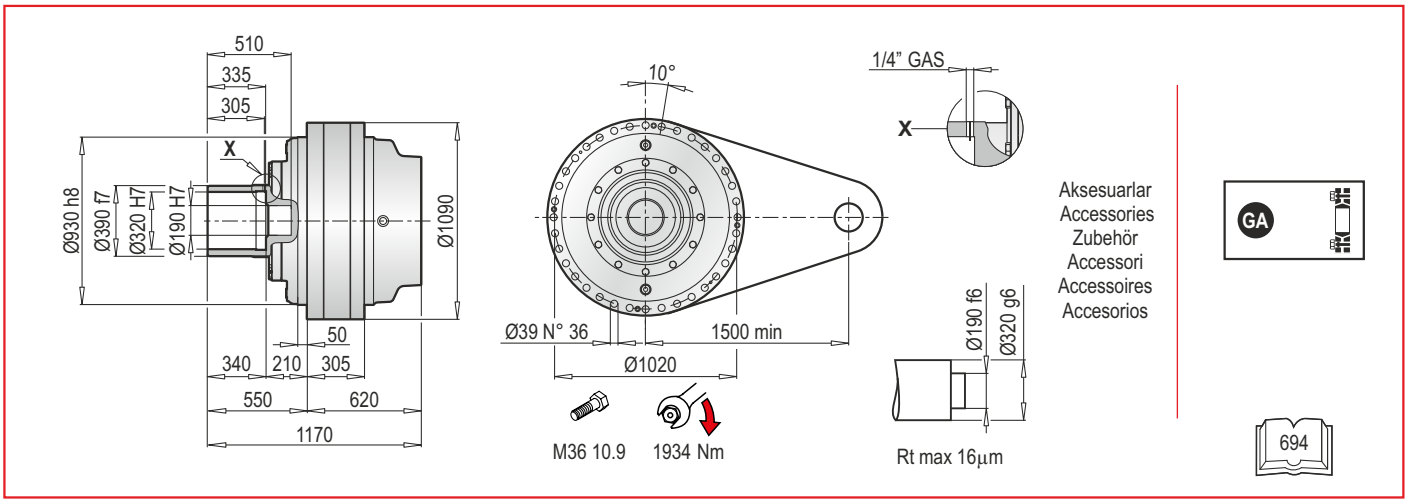

PL 550000 FS - Elektrik Motor Adaptörleri (IEC) / Electrıc Motor Couplings (IEC) / Anbauvorrichtung Für Elektromotore (IEC) / Predisposizioni Per Motori Elettrici (IEC) / Adaptations Pour Moteurs Electriques (IEC) / Acoplamientos Para Motores Eléctricos (IEC)

PL	IEC 160			IEC 180			IEC 200			IEC 225			IEC 250			IEC 280		
	LT	Z	ØD	LT	Z	ØD	LT	Z	ØD	LT	Z	ØD	LT	Z	ØD	LT	Z	ØD
550001	770	150	350	770	150	350	770	150	400	759	139	450	759	139	550	759	139	550
550002	1053.5			1053.5			1053.5			1042.5			1042.5			1042.5		
550003	1274.5			1274.5			1274.5			1263.5			1263.5			1263.5		
550004	1381.5			1381.5			1381.5			1370.5			1370.5			1370.5		
550005	1421	118		1421	118		1451	148		1442			1451.5	148.5		1451.5	148.5	

PL	IEC ~ Kg					
	160	180	200	225	250	280
550001	3317	3317	3322	3328	3340	3352
550002	3827	3827	3832	3838	3850	3862
550003	4022	4022	4027	4033	4045	4057
550004	4081	4081	4086	4092	4104	4116
550005	4079	4079	4089	4094	4135	4137

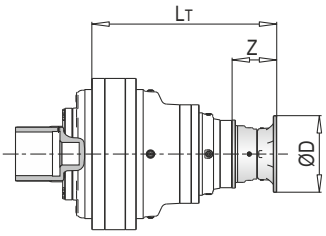

PL 550000 FS - Giriş Milleri / Input Shafts / Antriebswellen / Alberi Entrata / Arbres D'entree / Ejes De Entrada

PL	EL C 28				EL C 42				EML 42				EML 1"3/8 Z6				EM 65				EM 1"3/8 Z6			
	LT	Z	L	Ød	LT	Z	L	Ød	LT	Z	L	Ød	LT	Z	L	Ød	LT	Z	L	Ød	LT	Z	L	Ød
550003	-				-				-				-				-				-			
550004	-				-				-				-				1353	121.5	105	65	1353	121.5	105	1"3/8
550005	1367	64	50	28	1367	64	82	42	1397	94	82	42	1397	94	106	1"3/8	1424.5				1424.5			

PL	EP 65				ET 90			
	LT	Z	L	Ød	LT	Z	L	Ød
550003	-				1296	171.5	170	90
550004	1384.5	153	105	65	1403			
550005	1456				-			

PL	~ Kg							
	EL C 28	EL C 42	EML 42	EML 1"3/8 Z6	EM 65	EM 1"3/8 Z6	EP 65	ET 90
550003	-	-	-	-	-	-	-	4025
550004	-	-	-	-	4053	4053	4062	4084
550005	4063	4063	4066	4066	4074	4074	4083	-

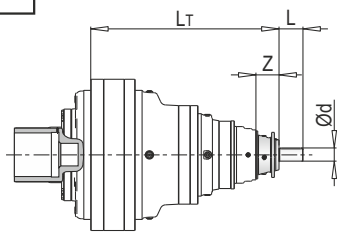

PL 550000 FS - Sonsuz Dişlili Redüktör Adaptörleri (PMRV/PRV) / Worm Gearbox Adaptors (PMRV/PRV) / Anschluss Für Schneckengetriebe (PMRV/PRV) / Predisposizioni Per Riduttori A Vite Senza Fine (PMRV/PRV) / Adaptation Pour Reducteurs A Vis Sans Fin (PMRV/PRV) / Acoplamiento Para Reductores De Tornillo Sin Fin (PMRV/PRV)

PL	PMRV/PRV 050					PMRV/PRV 063					PMRV/PRV 075				
	LM	l	h	MA	G	LM	l	h	MA	G	LM	l	h	MA	G
550004	-					-					-				
550005	1424.5	50	110	60	80	1434	63	113	72	95	1413	75	161	86	112.5

PL	PMRV/PRV 090					PMRV/PRV 110					PMRV/PRV 130				
	LM	l	h	MA	G	LM	l	h	MA	G	LM	l	h	MA	G
550004	-					1365.5	110	237.5	127.5	160	1371	130	277.5	147.5	180
550005	1423	90	193	103	129.5	1437					1442.5				

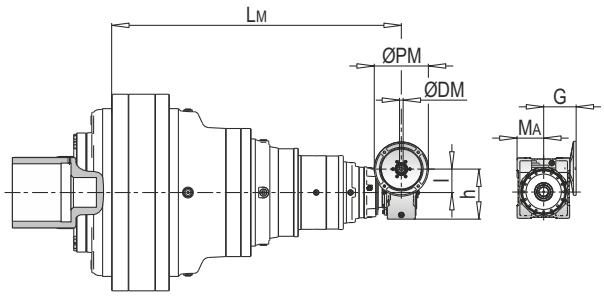

ØPM
ØDM
105

PL	PMRV/PRV 150				
	LM	l	h	MA	G
550004	1387.5	150	320	170	210
550005	1459				

PL	PMRV/PRV ~ Kg						
	050	063	075	090	110	130	150
550001	-	-	-	-	4082	4099	4135
550002	4065	4069	4071	4076	4103	4120	4156

PLB 550000 FS - Elektrik Motor Adaptörleri (IEC) / Electric Motor Couplings (IEC) / Anbauvorrichtung Für Elektromotore (IEC) / Predisposizioni Per Motori Elettrici (IEC) / Adaptations Pour Moteurs Electriques (IEC) / Acoplamientos Para Motores Eléctricos (IEC)

PLB	IEC 160				IEC 180				IEC 200				IEC 225			
	A	LT	Z	ØD	A	LT	Z	ØD	A	LT	Z	ØD	A	LT	Z	ØD
550005	1366.5	1421	118	350	1366.5	1421	118	350	1366.5	1451	148	400	1366.5	1442	139	450

PLB	IEC 250				IEC 280			
	A	LT	Z	ØD	A	LT	Z	ØD
550005	1366.5	1451.5	148.5	550	1366.5	1451.5	148.5	550

PLB	IEC ~ Kg					
	160	180	200	225	250	280
550005	4079	4079	4089	4094	4135	4147

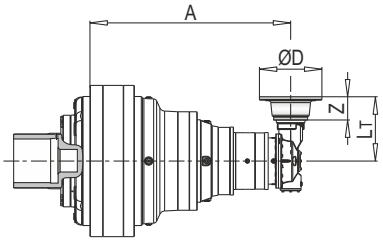

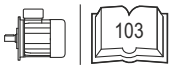
103

PLB 550000 FS - Giriş Milleri / Input Shafts / Antriebswellen / Alberi Entrata / Arbres D'entree / Ejes De Entrada

PLB	EM 65					EM 1"3/8 Z6					EP 65				
	A	LT	Z	L	Ød	A	LT	Z	L	Ød	A	LT	Z	L	Ød
550005	1366.5	436.5	121.5	105	65	1366.5	436.5	121.5	105	1"3/8	1366.5	468	153	105	65

PLB	~ Kg		
	EM 65	EM 1"3/8 Z6	EP 65
550005	4074	4074	4083

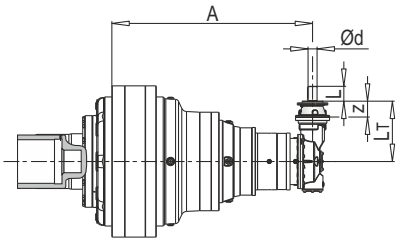

Ød
88-90

AKSESUARLAR / ACCESSORIES / ZUBEHÖR / ACCESSORI / ACCESSOIRES / ACCESORIOS

GA

Konik sıktırma / Shrink disc / Schrumpfscheibe
Giunto di attrito / Frette de serrage / Disco de contracción

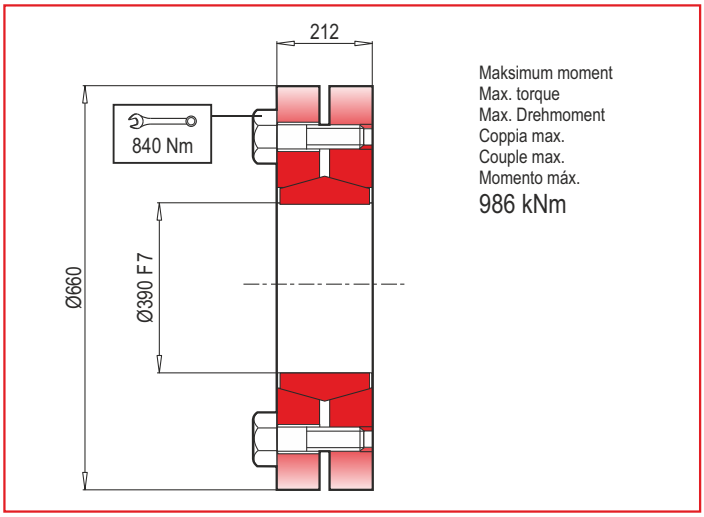

TEKNİK VERİLER / TECHNICAL DATA / TECHNISCHE DATEN / DATI TECNICI / DONNÉES TECHNIQUES / DATOS TÉCNICAS

	i_{ges}	Mmax (n_2 x h: 20000) (Nm)
620001	3.84	1323900
620002	14.13 ... 18.97	933100
620003	54.07 ... 72.58	884500
620004	216.27 ... 453.62	884500
620005	792.99 ... 3175.35	884500

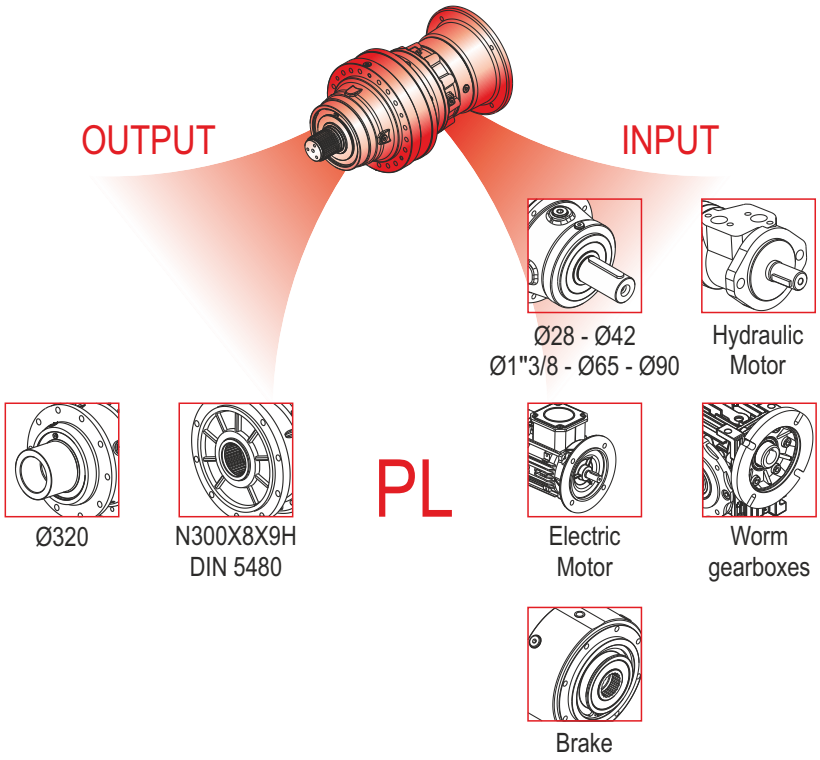

	i_{ges}	Mmax (n_2 x h: 20000) (Nm)
620005	863.53 ... 2116.90	709200

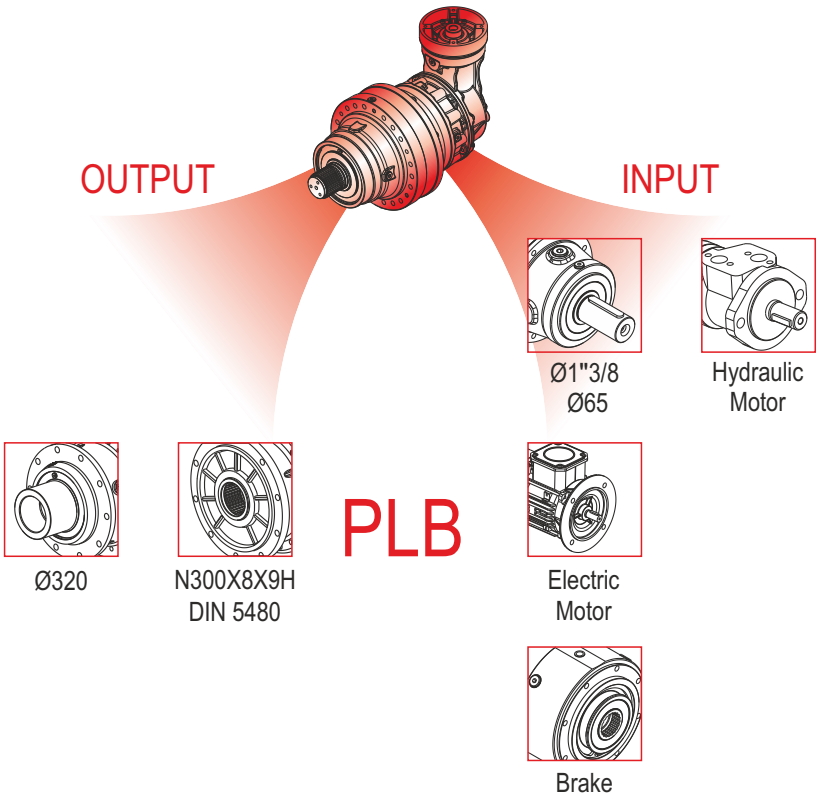

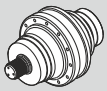	Pt [kW]	n_{1max} [min^{-1}]	i_{ges}	Mc [kNm]				Giriş- Input - Antrieb - Entrata - Entrée - Entrada		
				n_2 x h	n_2 x h	n_2 x h	n_2 x h			
				10.000	20.000	50.000	100.000	IEC (B5)	PMRV / PRV	EL - EML EM - EP - ET
PL 620001	324	100	3.84	972.1	875.3	762.0	706.5	160 200 250 180 225 280	-	-
PL 620002	185	200	14.13 18.97	729.3 525.0	622.1 472.8	472.6 411.6	383.8 370.7	160 200 250 180 225 280	-	-
PL 620003	129	1200	54.07 72.58	666.3 525.0	589.7 472.8	472.6 411.6	383.8 370.7	160 200 250 180 225 280	-	ET 90
PL 620004	98	2000	216.27 281.15 290.32 337.92 377.41 453.62	666.3 666.3 525.0 516.9 525.0 525.0	589.7 589.7 472.8 457.6 472.8 472.8	472.6 472.6 411.6 389.4 411.6 411.6	383.8 383.8 370.7 344.6 370.7 370.7	160 180 200 225 250 280	110 130 150	EM 65 EM 1"3/8 Z6 EP 65 ET 90
PL 620005	81	2800	792.99 957.76 1030.88 1245.09 1405.75 1663.28 1887.06 1959.94 2631.00 3175.35	601.8 549.4 666.3 666.3 599.1 525.0 525.0 516.9 525.0 525.0	532.7 486.4 589.7 589.7 530.4 472.8 472.8 457.6 472.8 472.8	453.0 413.6 472.6 472.6 451.2 411.6 411.6 389.4 411.6 411.6	383.8 366.5 383.8 383.8 383.8 370.7 370.7 344.6 370.7 370.7	160 180 200 225 250 280	050 063 075 090 110 130 150	EL C 28 EL C 42 EML 42 EML 1"3/8 Z6 EM 65 EM 1"3/8 Z6 EP 65

	Pt [kW]	n_{1max} [min^{-1}]	i_{ges}	Mc [kNm]				Giriş- Input - Antrieb - Entrata - Entrée - Entrada	
				n_2 x h	n_2 x h	n_2 x h	n_2 x h		
				10.000	20.000	50.000	100.000	IEC (B5)	EL - EML EM - EP - ET
PLB 620005	75	2500	863.53 1037.90 1159.20 1312.03 1393.26 1576.96 1761.26 2116.90	552.0 516.9 525.0 503.8 525.0 516.9 525.0 525.0	448.5 457.6 472.8 409.0 472.8 457.6 472.8 472.8	340.8 387.6 411.6 310.6 411.6 353.2 381.6 411.6	276.9 315.0 340.3 252.1 370.7 286.7 309.9 352.4	160 180 200 225 250 280	EM 65 EM 1"3/8 Z6 EP 65

(n2 x h = 20.000)

$$M_{max} = M_C \times 1.5$$

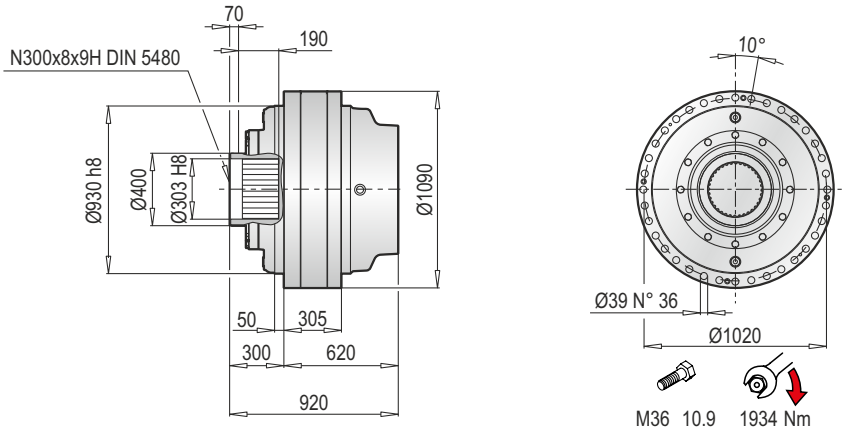

PL 620000 F - Elektrik Motor Adaptörleri (IEC) / Electrıc Motor Couplings (IEC) /Anbauvorrichtung Für Elektromotore (IEC) / Predisposizioni Per Motori Elettrici (IEC) / Adaptations Pour Moteurs Electriques (IEC) /Acoplamientos Para Motores Eléctricos (IEC)

PL	IEC 160			IEC 180			IEC 200			IEC 225			IEC 250			IEC 280		
	LT	Z	ØD	LT	Z	ØD	LT	Z	ØD	LT	Z	ØD	LT	Z	ØD	LT	Z	ØD
620001	770	150	350	770	150	350	770	150	400	759	139	450	759	139	550	759	139	550
620002	1053.5			1053.5			1053.5			1042.5			1042.5			1042.5		
620003	1274.5			1274.5			1274.5			1263.5			1263.5			1263.5		
620004	1381.5			1381.5			1381.5			1370.5			1370.5			1370.5		
620005	1421	118		1421	118		1451	148		1442			1451.5	148.5		1451.5	148.5	

PL	IEC ~ Kg					
	160	180	200	225	250	280
620001	3260	3260	3265	3271	3283	3295
620002	3770	3770	3775	3781	3793	3805
620003	3965	3965	3970	3976	3988	4000
620004	4024	4024	4029	4035	4047	4059
620005	4022	4022	4032	4037	4078	4080

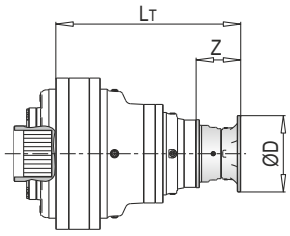

PL 620000 F - Giriş Milleri / Input Shafts / Antriebswellen / Alberi Entrata / Arbres D'entree / Ejes De Entrada

PL	EL C 28				EL C 42				EML 42				EML 1"3/8 Z6				EM 65				EM 1"3/8 Z6			
	LT	Z	L	Ød	LT	Z	L	Ød	LT	Z	L	Ød	LT	Z	L	Ød	LT	Z	L	Ød	LT	Z	L	Ød
620003	-				-				-				-				-				-			
620004	-				-				-				-				1353	121.5	105	65	1353	121.5	105	1"3/8
620005	1367	64	50	28	1367	64	82	42	1397	94	82	42	1397	94	106	1"3/8	1424.5				1424.5			

PL	EP 65				ET 90			
	LT	Z	L	Ød	LT	Z	L	Ød
620003	-				1296	171.5	170	90
620004	1384.5	153	106	65	1403			
620005	1456				-			

PL	~ Kg							
	EL C 28	EL C 42	EML 42	EML 1"3/8 Z6	EM 65	EM 1"3/8 Z6	EP 65	ET 90
620003	-	-	-	-	-	-	-	3968
620004	-	-	-	-	3996	3996	4005	4027
620005	4006	4006	4009	4009	4017	4017	4026	-

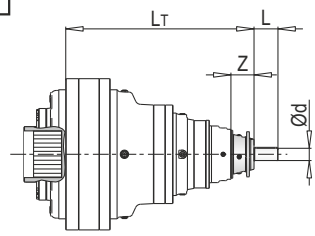

PL 620000 F - Sonsuz Dişlili Redüktör Adaptörleri (PMRV/PRV) / Worm Gearbox Adaptors (PMRV/PRV) / Anschluss Für Schneckengetriebe (PMRV/PRV) / Predisposizioni Per Riduttori A Vite Senza Fine (PMRV/PRV) / Adaptation Pour Reducteurs A Vis Sans Fin (PMRV/PRV) / Acoplamiento Para Reductores De Tornillo Sin Fin (PMRV/PRV)

PL	PMRV/PRV 050					PMRV/PRV 063					PMRV/PRV 075				
	LM	l	h	MA	G	LM	l	h	MA	G	LM	l	h	MA	G
620004	-					-					-				
620005	1424.5	50	110	60	80	1434	63	113	72	95	1413	75	161	86	112.5

PL	PMRV/PRV 090					PMRV/PRV 110					PMRV/PRV 130				
	LM	l	h	MA	G	LM	l	h	MA	G	LM	l	h	MA	G
620004	-					1365.5	110	237.5	127.5	160	1371	130	277.5	147.5	180
620005	1423	90	193	103	129.5	1437					1442.5				

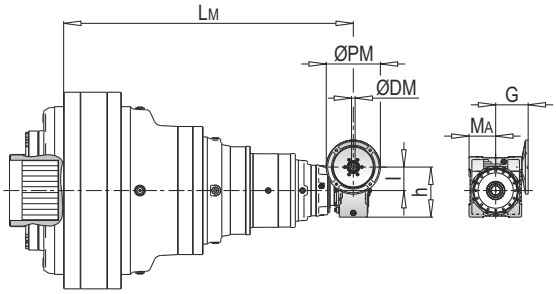

ØPM
ØDM
105

PL	PMRV/PRV 150				
	LM	l	h	MA	G
620004	1387.5	150	320	170	210
620005	1459				

PL	PMRV/PRV ~ Kg						
	050	063	075	090	110	130	150
620004	-	-	-	-	4025	4042	4078
620005	4008	4012	4014	4019	4046	4063	4099

PLB 620000 F - Elektrik Motor Adaptörleri (IEC) / Electric Motor Couplings (IEC) / Anbauvorrichtung Für Elektromotore (IEC) / Predisposizioni Per Motori Elettrici (IEC) / Adaptations Pour Moteurs Electriques (IEC) / Acoplamientos Para Motores Eléctricos (IEC)

PLB	IEC 160				IEC 180				IEC 200				IEC 225			
	A	LT	Z	ØD	A	LT	Z	ØD	A	LT	Z	ØD	A	LT	Z	ØD
620005	1366.5	1421	118	350	1366.5	1421	118	350	1366.5	1451	148	400	1366.5	1442	139	450

PLB	IEC 250				IEC 280			
	A	LT	Z	ØD	A	LT	Z	ØD
620005	1366.5	1451.5	148.5	550	1366.5	1451.5	148.5	550

PLB	IEC ~ Kg					
	160	180	200	225	250	280
620005	4022	4022	4032	4037	4078	4090

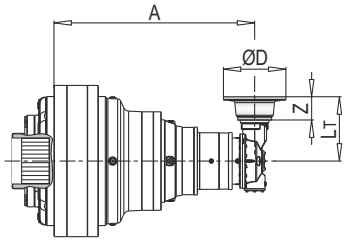

103

PLB 620000 F - Giriş Milleri / Input Shafts / Antriebswellen / Alberi Entrata / Arbres D'entree / Ejes De Entrada

PLB	EM 65					EM 1"3/8 Z6					EP 65				
	A	LT	Z	L	Ød	A	LT	Z	L	Ød	A	LT	Z	L	Ød
620005	1366.5	436.5	121.5	105	65	1366.5	436.5	121.5	105	1"3/8	1366.5	468	153	105	65

PLB	~ Kg		
	EM 65	EM 1"3/8 Z6	EP 65
620005	4017	4017	4026

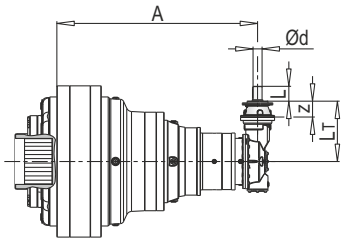

Ød
88-90

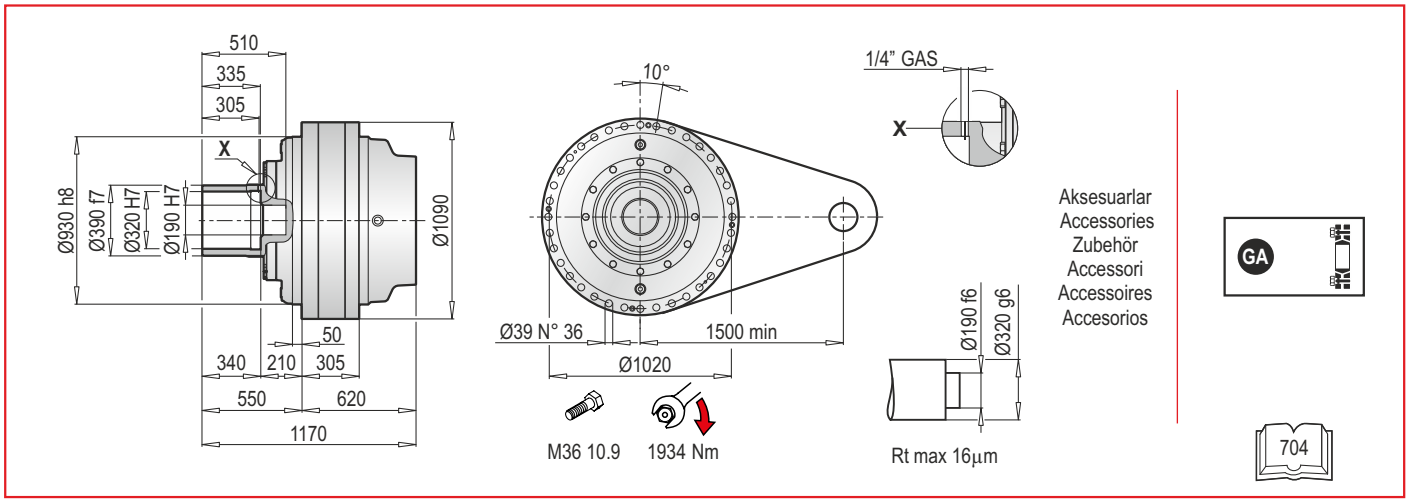

PL 620000 FS - Elektrik Motor Adaptörleri (IEC) / Electrıc Motor Couplings (IEC) / Anbauvorrichtung Für Elektromotore (IEC) / Predisposizioni Per Motori Elettrici (IEC) / Adaptations Pour Moteurs Electriques (IEC) / Acoplamientos Para Motores Eléctricos (IEC)

PL	IEC 160			IEC 180			IEC 200			IEC 225			IEC 250			IEC 280		
	LT	Z	ØD	LT	Z	ØD	LT	Z	ØD	LT	Z	ØD	LT	Z	ØD	LT	Z	ØD
620001	770	150	350	770	150	350	770	150	400	759	139	450	759	139	550	759	139	550
620002	1053.5			1053.5			1053.5			1042.5			1042.5			1042.5		
620003	1274.5			1274.5			1274.5			1263.5			1263.5			1263.5		
620004	1381.5			1381.5			1381.5			1370.5			1370.5			1370.5		
620005	1421	118		1421	118		1451	148		1442	139		1451.5	148.5		1451.5	148.5	

PL	IEC ~ Kg					
	160	180	200	225	250	280
620001	3317	3317	3322	3328	3340	3352
620002	3827	3827	3832	3838	3850	3862
620003	4022	4022	4027	4033	4045	4057
620004	4081	4081	4086	4092	4104	4116
620005	4079	4079	4089	4094	4135	4137

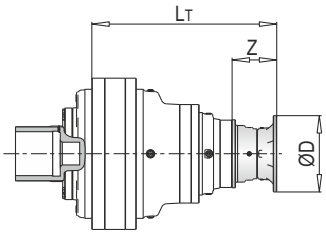

PL 620000 FS - Giriş Milleri / Input Shafts / Antriebswellen / Alberi Entrata / Arbres D'entree / Ejes De Entrada

PL	EL C 28				EL C 42				EML 42				EML 1"3/8 Z6				EM 65				EM 1"3/8 Z6			
	LT	Z	L	Ød	LT	Z	L	Ød	LT	Z	L	Ød	LT	Z	L	Ød	LT	Z	L	Ød	LT	Z	L	Ød
620003	-				-				-				-				-				-			
620004	-				-				-				-				1353	121.5	105	65	1353	121.5	105	1"3/8
620005	1367	64	50	28	1367	64	82	42	1397	94	82	42	1397	94	106	1"3/8	1424.5				1424.5			

PL	EP 65				ET 90			
	LT	Z	L	Ød	LT	Z	L	Ød
620003	-				1296	171.5	170	90
620004	1384.5	153	105	65	1403			
620005	1456				-			

PL	~ Kg							
	EL C 28	EL C 42	EML 42	EML 1"3/8 Z6	EM 65	EM 1"3/8 Z6	EP 65	ET 90
620003	-	-	-	-	-	-	-	4025
620004	-	-	-	-	4053	4053	4062	4084
620005	4063	4063	4066	4066	4074	4074	4083	-

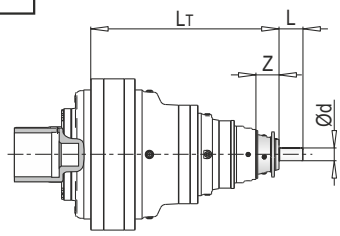

PL 620000 FS - Sonsuz Dişlili Redüktör Adaptörleri (PMRV/PRV) / Worm Gearbox Adaptors (PMRV/PRV) / Anschluss Für Schneckengetriebe (PMRV/PRV) / Predisposizioni Per Riduttori A Vite Senza Fine (PMRV/PRV) / Adaptation Pour Reducteurs A Vis Sans Fin (PMRV/PRV) / Acoplamiento Para Reductores De Tornillo Sin Fin (PMRV/PRV)

PL	PMRV/PRV 050					PMRV/PRV 063					PMRV/PRV 075				
	LM	l	h	MA	G	LM	l	h	MA	G	LM	l	h	MA	G
620004	-					-					-				
620005	1424.5	50	110	60	80	1434	63	113	72	95	1413	75	161	86	112.5

PL	PMRV/PRV 090					PMRV/PRV 110					PMRV/PRV 130				
	LM	l	h	MA	G	LM	l	h	MA	G	LM	l	h	MA	G
620004	-					1365.5	110	237.5	127.5	160	1371	130	277.5	147.5	180
620005	1423	90	193	103	129.5	1437					1442.5				

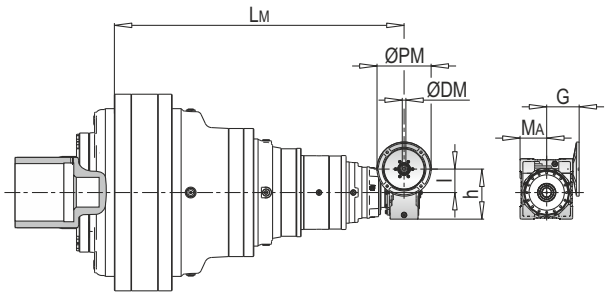

ØPM
ØDM
105

PL	PMRV/PRV 150				
	LM	l	h	MA	G
620004	1387.5	150	320	170	210
620005	1459				

PL	PMRV/PRV ~ Kg						
	050	063	075	090	110	130	150
620004	-	-	-	-	4082	4099	4135
620005	4065	4069	4071	4075	4103	4120	4156

PLB 620000 FS - Elektrik Motor Adaptörleri (IEC) / Electric Motor Couplings (IEC) / Anbauvorrichtung Für Elektromotore (IEC) / Predisposizioni Per Motori Elettrici (IEC) / Adaptations Pour Moteurs Electriques (IEC) / Acoplamientos Para Motores Eléctricos (IEC)

PLB	IEC 160				IEC 180				IEC 200			
	A	LT	Z	ØD	A	LT	Z	ØD	A	LT	Z	ØD
620005	1366.5	1421	118	350	1366.5	1421	118	350	1366.5	1451	148	400

PLB	IEC 225				IEC 250			
	A	LT	Z	ØD	A	LT	Z	ØD
620005	1366.5	1442	139	450	1366.5	1451.5	148.5	550

PLB	IEC ~ Kg				
	160	180	200	225	250
620005	4079	4079	4089	4094	4135

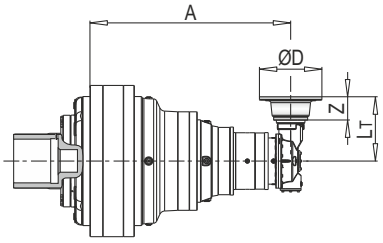

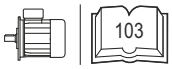
103

PLB 620000 F - Giriş Milleri / Input Shafts / Antriebswellen / Alberi Entrata / Arbres D'entree / Ejes De Entrada

PLB	EM 65					EM 1"3/8 Z6					EP 65				
	A	LT	Z	L	Ød	A	LT	Z	L	Ød	A	LT	Z	L	Ød
620005	1366.5	436.5	121.5	105	65	1366.5	436.5	121.5	105	1"3/8	1366.5	468	153	105	65

PLB	~ Kg		
	EM 65	EM 1"3/8 Z6	EP 65
620005	4074	4074	4083

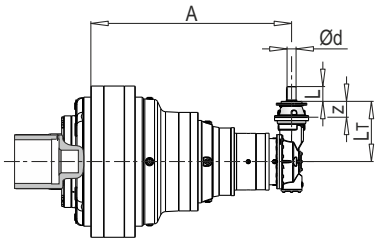

Ød
88-90

AKSESUARLAR / ACCESSORIES / ZUBEHÖR / ACCESSORI / ACCESSOIRES / ACCESORIOS

GA

Konik sıktırma / Shrink disc / Schrumpfscheibe
Giunto di attrito / Frette de serrage / Disco de contracción

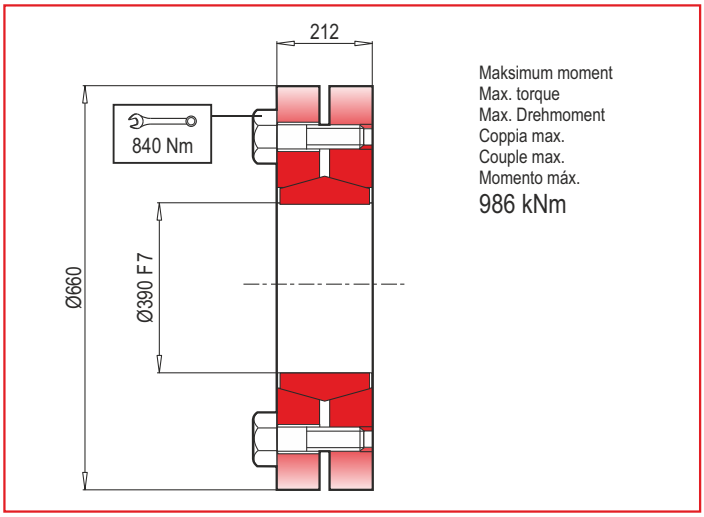

ELEKTRİKSEL ÖZELLİKLER - 50 Hz / ELECTRICAL CHARACTERISTICS AT 50 Hz

	Motor Tipi Motor Type	Gövde Tipi Housing Type	Nominal / Rated Values					Kalkıştaki Değerler / Starting Values				Devrilme Momenti Oranı Brakedown Torque Ratio	Verim * Efficiency* η%			Cos ϕ	J	Ağırlık (B3) Weight (B3)	Ses Seviyesi dBA** Sound Pressure Level dBA**
			Güç / Power		Devir Speed	Akım Current	Moment Torque	Akım Current I_A / A_N		Moment Torque M_A / M_N									
			kW	HP	d/d	A	Nm	⅄	Δ	⅄	Δ	Mk/Mn	4/4	3/4	2/4	4/4	kgm²	kg	
	2kutup3000d/d																		
220/380V	Q3E80M2C	Alüminyum	0,75	1,0	2880	1,7	2,5	7,4	-	4,0	-	4,8	80,7	79,1	77,4	0,86	0,00109	12,2	58
220/380V	Q3E80M2D	Alüminyum	1,1	1,5	2895	2,4	3,7	8,4	-	4,9	-	5,1	82,7	82,1	78,9	0,84	0,00150	13	58
220/380V	Q3E90L2C	Alüminyum	1,5	2,0	2910	3,2	4,9	8,9	-	4,2	-	4,9	84,2	84,7	82,3	0,86	0,00182	17,5	62
220/380V	Q3E90L2D	Alüminyum	2,2	3,0	2900	4,6	7,2	8,6	-	4,6	-	4,0	85,9	87,0	85,5	0,84	0,00182	18	62
220/380V	Q3E100L2D	Alüminyum	3,0	4,0	2920	5,6	9,8	9,8	-	4,1	-	4,4	87,1	86,9	84,5	0,89	0,00335	25	64
380/660V	Q3E112M2C	Alüminyum	4,0	5,5	2915	7,8	13,2	3,2	9,7	1,3	3,8	5,1	88,1	87,9	85,7	0,87	0,00489	31	67
380/660V	Q3E132S2C	Alüminyum	5,5	7,5	2900	10,4	18,0	3,6	10,8	1,0	3,0	3,5	89,2	88,9	86,7	0,91	0,01410	48	70
380/660V	Q3E132M2A	Alüminyum	7,5	10,0	2930	13,7	24,5	3,2	9,7	1,3	3,8	4,4	90,1	90,3	88,9	0,91	0,01596	51	70
380/660V	Q3E160L2A	Alüminyum	11,0	15,0	2940	19,8	35,9	2,9	8,8	1,0	3,0	5,1	91,2	91,4	90,3	0,93	0,03317	77	71
380/660V	Q3E160L2C	Alüminyum	15,0	20,0	2945	26,7	48,8	3,6	10,8	1,1	3,2	3,9	91,9	91,0	90,3	0,93	0,04075	91	71
380/660V	Q3E160L2D	Alüminyum	18,5	25,0	2940	33,4	60,0	2,9	8,8	1,3	3,8	4,1	92,4	92,0	90,9	0,91	0,04075	101	71
380/660V	Q3E180M2A	Alüminyum	22,0	30,0	2955	38,7	71,3	3,5	10,5	1,1	3,2	3,2	92,7	92,9	91,7	0,93	0,06193	139	77
380/660V	Q3E200L2C	Alüminyum	30,0	40,0	2950	52,9	97,4	3,0	9,1	0,8	2,4	3,5	93,3	93,8	93,4	0,93	0,11917	167	80
380/660V	Q3E200L2D	Alüminyum	37,0	50,0	2950	65,2	119,5	3,2	9,7	0,9	2,7	3,5	93,7	94,1	93,8	0,92	0,15010	179	80
380/660V	Q3E225M2C	Alüminyum	45,0	60,0	2965	80,3	145,2	2,7	8,0	0,8	2,4	3,4	94,0	94,0	93,2	0,91	0,23505	249	81
380/660V	Q3EP250M2C	Pik	55,0	75,0	2980	95,9	178,5	2,1	6,4	0,7	2,1	3,1	94,3	94,0	92,6	0,91	0,48707	488	82
380/660V	Q3EP280M2C	Pik	75,0	100,0	2975	125,4	240,8	2,7	8,0	0,6	1,9	4,0	94,7	94,0	92,7	0,92	0,54033	585	84
380/660V	Q3EP280M2D	Pik	90,0	125,0	2975	151,3	289,4	2,7	8,0	0,7	2,1	4,9	95,0	94,2	92,7	0,93	0,64510	587	84
400/690V	Q3EP315S2C	Pik	110,0	127,0	2.983	187	358	2,4	7,2	0,6	1,7	2,6	95,2	95,2	94,0	0,89	2,19900	963	83
400/690V	Q3EP315M2B	Pik	132,0	152,0	2.983	224	418	2,5	7,5	0,6	1,8	2,6	95,4	95,4	94,4	0,89	2,37790	1.007	83
400/690V	Q3EP315L2A	Pik	160,0	184,0	2.983	271	513	2,5	7,5	0,6	1,8	2,6	95,6	95,6	94,4	0,89	2,62170	1.065	83
400/690V	Q3EP315L2C	Pik	200,0	230,0	2.983	339	641	2,5	7,5	0,6	1,9	2,6	95,8	95,8	94,9	0,89	2,90860	1.180	83
400/690V	Q3EP355M2C	Pik	250,0	280,0	2.983	419	800	2,4	7,3	0,6	1,7	2,5	95,8	95,8	94,7	0,90	3,81300	1.612	91
400/690V	Q3EP355L2B	Pik	315,0	353,0	2.984	527	1.008	2,4	7,3	0,6	1,8	2,5	95,8	95,7	94,4	0,90	4,52000	1.771	91
400/690V	Q3EP355L2C	Pik	355,0	398,0	2.981	594	1.137	2,6	7,9	0,7	2,2	2,5	95,8	95,8	95,0	0,90	5,58000	2.002	91
	4kutup1500d/d																		
220/380V	Q3E80M4D	Alüminyum	0,75	1,0	1430	1,8	5,0	6,1	-	3,0	-	3,1	82,5	81,2	78,0	0,77	0,00268	12	49
220/380V	Q3E90L4C	Alüminyum	1,1	1,5	1440	2,5	7,4	7,5	-	2,9	-	3,3	84,1	84,1	81,3	0,80	0,00365	18	54
220/380V	Q3E90L4D	Alüminyum	1,5	2,0	1440	3,5	10,0	7,9	-	3,2	-	3,6	85,3	84,9	82,0	0,76	0,00365	18	55
220/380V	Q3E100L4C	Alüminyum	2,2	3,0	1445	5,1	14,6	7,6	-	3,7	-	4,0	86,7	84,4	82,0	0,78	0,00545	26	56
220/380V	Q3E100L4D	Alüminyum	3,0	4,0	1435	7,1	19,9	8,2	-	3,8	-	4,1	87,7	87,3	85,5	0,73	0,00581	26	56
380/660V	Q3E112M4D	Alüminyum	4,0	5,5	1445	8,3	26,3	2,8	8,3	1,0	3,0	4,0	88,6	87,6	85,8	0,83	0,01123	31	58
380/660V	Q3E132M4B	Alüminyum	5,5	7,5	1465	11,4	36,2	2,3	6,8	1,1	3,2	3,9	89,6	89,0	86,8	0,80	0,02763	54	61
380/660V	Q3E132M4C	Alüminyum	7,5	10,0	1450	15,8	49,4	2,5	7,4	1,0	3,0	4,1	90,4	89,3	87,4	0,82	0,02980	57	61
380/660V	Q3E160L4A	Alüminyum	11,0	15,0	1470	23,0	71,9	2,4	7,1	1,0	3,0	3,6	91,4	90,7	89,4	0,81	0,06922	90	63
380/660V	Q3E160L4B	Alüminyum	15,0	20,0	1465	30,8	98,0	2,7	8,0	0,9	2,6	3,4	92,1	91,7	90,7	0,82	0,07991	107	63
380/660V	Q3E180M4B	Alüminyum	18,5	25,0	1470	35,3	120,7	2,8	8,3	0,8	2,4	3,1	92,6	92,5	92,2	0,86	0,11220	148	69
380/660V	Q3E180L4B	Alüminyum	22,0	30,0	1475	42,0	142,4	2,7	8,0	0,8	2,4	2,5	93,0	93,0	93,0	0,86	0,12773	157	69
380/660V	Q3E200L4D	Alüminyum	30,0	40,0	1480	54,3	193,6	2,4	7,1	0,7	2,2	2,5	93,6	93,6	93,7	0,86	0,26448	183	70
380/660V	Q3E225M4D	Alüminyum	37,0	50,0	1485	77,8	239,6	2,8	8,3	0,9	2,7	3,3	93,9	92,6	90,6	0,81	0,36429	280	71
380/660V	Q3E225M4DE	Alüminyum	45,0	60,0	1480	84,3	289,9	2,9	8,6	0,9	2,7	3,3	94,2	93,1	91,6	0,85	0,43513	282	71
380/660V	Q3EP250M4E	Pik	55,0	75,0	1450	100,0	356,1	2,6	7,7	0,9	2,7	3,2	94,6	94,0	92,8	0,87	0,90782	506	72
380/660V	Q3EP280M4C	Pik	75,0	100,0	1485	141,7	482,0	2,5	7,4	0,9	2,7	2,9	95,0	94,7	93,5	0,84	1,06114	624	73
380/660V	Q3EP280M4D	Pik	90,0	125,0	1485	163,5	584,2	2,5	7,4	0,9	2,7	2,9	95,2	94,5	93,7	0,86	1,14768	653	73
400/690V	Q3EP315S4C	Pik	110,0	127,0	1.489	194	705	2,5	7,5	0,7	2,0	2,5	95,4	95,4	94,7	0,86	3,46500	867	70
400/690V	Q3EP315M4B	Pik	132,0	152,0	1.489	232	846	2,5	7,6	0,7	2,1	2,5	95,6	95,6	95,0	0,86	3,96600	993	70
400/690V	Q3EP315L4A	Pik	160,0	184,0	1.489	274	1.026	2,5	7,6	0,7	2,2	2,5	95,8	95,8	95,4	0,88	4,88320	1.165	70
400/690V	Q3EP315L4C	Pik	200,0	230,0	1.489	346	1.282	2,7	8,2	0,7	2,2	2,5	96,0	96,0	95,5	0,87	5,23440	1.223	70
400/690V	Q3EP355M4C	Pik	250,0	280,0	1.491	422	1.601	2,5	7,5	0,6	1,9	2,4	96,0	96,0	95,5	0,89	9,30600	1.692	82
400/690V	Q3EP355L4B	Pik	315,0	353,0	1.491	532	2.017	2,5	7,5	0,6	1,9	2,4	96,0	96,0	95,5	0,89	10,06700	1.879	82
400/690V	Q3EP355L4C	Pik	355,0	398,0	1.491	600	2.273	2,5	7,5	0,7	2,0	2,3	96,0	96,0	95,5	0,89	11,90000	1.953	82

ELEKTRİKSEL ÖZELLİKLER - 50 Hz / ELECTRICAL CHARACTERISTICS AT 50 Hz

	Motor Tipi Motor Type	Gövde Tipi Housing Type	Nominal / Rated Values					Kalkıştaki Değerler / Starting Values				Devrilme Momenti Oranı Brakedown Torque Ratio	Verim * Efficiency* η%			Cos ϕ	J	Ağırlık (B3) Weight (B3)	Ses Seviyesi dBA** Sound Pressure Level dBA**
			Güç / Power		Devir Speed	Akım Current	Moment Torque	Akım Current I_A / A_N		Moment Torque M_A / M_N									
			kW	HP	d/d	A	Nm	⅄	Δ	⅄	Δ	Mk/Mn	4/4	3/4	2/4	4/4	kgm²	kg	
	6kutup1000d/d																		
220/380V	Q3E90L6C	Alüminyum	0,75	1,0	940	2,2	7,6	4,0	-	2,3	-	2,5	78,9	77,7	76,1	0,65	0,00365	18	54
220/380V	Q3E90L6D	Alüminyum	1,1	1,5	940	3,1	11,2	4,2	-	2,3	-	2,6	81,0	80,5	79,9	0,66	0,00451	20	55
220/380V	Q3E100L6D	Alüminyum	1,5	2,0	940	3,9	15,2	4,5	-	2,3	-	2,7	82,5	81,9	79,0	0,68	0,00570	26	56
220/380V	Q3E112M6D	Alüminyum	2,2	3,0	950	5,4	22,0	4,7	-	2,4	-	2,7	84,3	83,7	80,7	0,73	0,01107	32	58
380/660V	Q3E132M6B	Alüminyum	3,0	4,0	960	7,5	29,7	1,7	5,2	0,6	1,7	2,3	85,6	85,2	82,8	0,70	0,02709	58,5	61
380/660V	Q3E132M6C	Alüminyum	4,0	5,5	955	9,5	39,8	1,8	5,3	0,6	1,9	2,3	86,8	85,7	82,8	0,74	0,02921	67	61
380/660V	Q3E132M6D	Alüminyum	5,5	7,5	950	12,7	55,0	1,7	5,0	0,6	1,8	2,3	88,0	87,6	85,3	0,75	0,03347	76	61
380/660V	Q3E160L6C	Alüminyum	7,5	10,0	970	17,7	74,2	1,8	5,5	0,6	1,9	2,7	89,1	89,0	88,0	0,72	0,07663	96	63
380/660V	Q3E160L6D	Alüminyum	11,0	15,0	955	25,3	109,4	1,8	5,5	0,6	1,9	2,7	90,3	90,1	89,3	0,75	0,08129	100,5	63
380/660V	Q3E180L6B	Alüminyum	15,0	20,0	978	32,2	146,2	2,0	5,9	0,6	1,8	2,6	91,2	90,9	88,7	0,79	0,22951	155	69
380/660V	Q3E200L6C	Alüminyum	18,5	25,0	975	37,7	180,3	1,8	5,5	0,5	1,6	2,4	91,7	91,5	90,9	0,82	0,31281	165	70
380/660V	Q3E200L6D	Alüminyum	22,0	30,0	975	44,5	214,4	1,8	5,5	0,5	1,6	2,4	92,2	92,0	91,4	0,82	0,33078	170	70
380/660V	Q3E225M6C	Alüminyum	30,0	40,0	970	62,1	293,8	1,8	5,4	0,5	1,6	2,3	92,9	92,8	91,8	0,79	0,52901	237,5	71

*** IEC 60034-2-1'e göre belirlenen verim değerleri**
**** Ses seviyesi ölçümleri motordan 1 metre uzaklıktan alınır.**
**** Tolerans + 3 dBA**

*** According to IEC 60034-2-1**
**** The sound pressure measurement are taken 1m away from the motor.**
**** Tolerance + 3 dBA**

BOYUTLAR / DIMENSIONS - B3

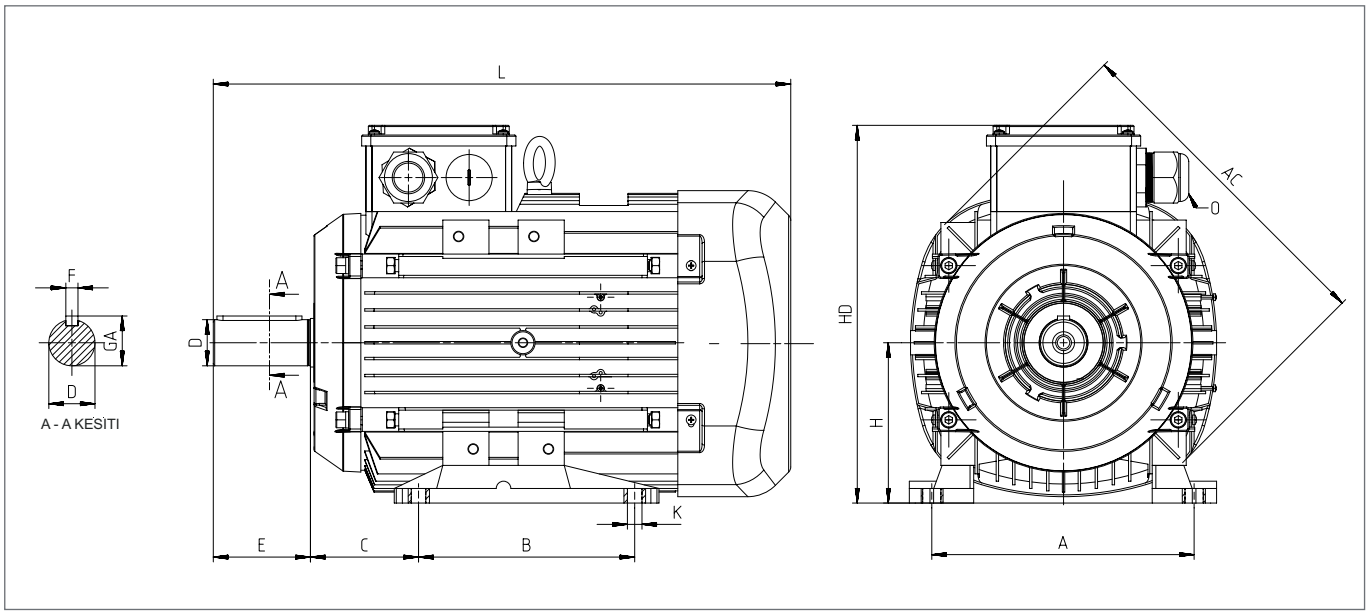

				Ana Boyutlar Main Dimensions			Ayaklı Motorlar / Foot Mounted Motors						Mil / Shaft				Rulman / Bearing		Keçe / Seal	
Güç Power (kW)	Kutup Sayısı Number of Poles	Motor Tipi Motor Type	Gövde Tipi Housing Type	AC	L	O	B	A	H	HD	K	C	D(1)	E	GA	F(2)	Kasnak Tarafı Drive Side	Kasnak Tarafı Aksi Non Drive Side	Kasnak Tarafı Drive Side	Kasnak Tarafı Aksi Non Drive Side
0,75	2	Q3E80M2C	Alüminyum	158	283,5	1*M20	100	125	80	195	10	50	19	40	21,5	6	6204-2Z	6204-2Z	20*30*7	20*30*7
	4	Q3E80M4D	Alüminyum	158	283,5	1*M20	100	125	80	195	10	50	19	40	21,5	6	6204-2Z	6204-2Z	20*30*7	20*30*7
	6	Q3E90L6C	Alüminyum	193	316,5	1*M25	125	140	90	222	10	56	24	50	27	8	6305-2Z	6205-2Z	25*40*7	25*40*7
1,1	2	Q3E80M2D	Alüminyum	158	283,5	1*M20	100	125	80	195	10	50	19	40	21,5	6	6204-2Z	6204-2Z	20*30*7	20*30*7
	4	Q3E90L4C	Alüminyum	193	316,5	1*M25	100	140	90	222	10	56	24	50	27	8	6305-2Z	6205-2Z	25*40*7	25*40*7
	6	Q3E90L6D	Alüminyum	193	344,5	1*M25	125	140	90	222	10	56	24	50	27	8	6305-2Z	6205-2Z	25*40*7	25*40*7
1,5	2	Q3E90L2C	Alüminyum	193	316,5	1*M25	100	140	90	222	10	56	24	50	27	8	6305-2Z	6205-2Z	25*40*7	25*40*7
	4	Q3E90L4D	Alüminyum	193	344,5	1*M25	125	140	90	222	10	56	24	50	27	8	6305-2Z	6205-2Z	25*40*7	25*40*7
	6	Q3E100L6D	Alüminyum	217	352,0	1*M25	140	160	100	241	12	63	28	60	31	8	6306-2Z	6205-2Z	30*47*7	25*47*7
2,2	2	Q3E90L2D	Alüminyum	193	316,5	1*M25	125	140	90	222	10	56	24	50	27	8	6305-2Z	6205-2Z	25*40*7	25*40*7
	4	Q3E100L4C	Alüminyum	217	352,0	1*M25	140	160	100	241	12	63	28	60	31	8	6306-2Z	6205-2Z	30*47*7	25*40*7
	6	Q3E112M6D	Alüminyum	232	395,5	2*M25	140	190	112	261	12	70	28	60	31	8	6306-2Z	6206-2Z	30*47*7	30*47*7
3,0	2	Q3E100L2C	Alüminyum	217	352,0	1*M25	140	160	100	241	12	63	28	60	31	8	6306-2Z	6205-2Z	30*47*7	25*40*7
	4	Q3E100L4D	Alüminyum	217	377,0	1*M25	140	160	100	241	12	63	28	60	31	8	6306-2Z	6205-2Z	30*47*7	25*40*7
	6	Q3E132M6B	Alüminyum	260	481,0	2*M32	178	216	132	323	12	89	38	80	41	10	6208-2Z	6208-2Z	40*62*10	40*62*10
4,0	2	Q3E112M2C	Alüminyum	232	395,5	2*M25	140	190	112	261	12	70	28	60	31	8	6306-2Z	6206-2Z	30*47*7	30*47*7
	4	Q3E112M4C	Alüminyum	232	395,5	2*M25	140	190	112	261	12	70	28	60	31	8	6306-2Z	6206-2Z	30*47*7	30*47*7
	6	Q3E132M6C	Alüminyum	260	481,0	2*M32	178	216	132	323	12	89	38	80	41	10	6208-2Z	6208-2Z	40*62*10	40*62*10
5,5	2	Q3E132S2C	Alüminyum	279	440,5	2*M32	140	216	132	314	12	89	38	80	41	10	6208-2Z	6208-2Z	40*62*10	40*62*10
	4	Q3E132M4B	Alüminyum	279	475,5	2*M32	140	216	132	314	12	89	38	80	41	10	6208-2Z	6208-2Z	40*62*10	40*62*10
	6	Q3E132M6D	Alüminyum	260	481,0	2*M32	178	216	132	323	12	89	38	80	41	10	6208-2Z	6208-2Z	40*62*10	40*62*10
7,5	2	Q3E132M2A	Alüminyum	279	475,5	2*M32	140	216	132	314	12	89	38	80	41	10	6208-2Z	6208-2Z	40*62*10	40*62*10
	4	Q3E132M4C	Alüminyum	279	475,5	2*M32	178	216	132	314	12	89	38	80	41	10	6208-2Z	6208-2Z	40*62*10	40*62*10
	6	Q3E160L6C	Alüminyum	302	576,0	2*M32	254	254	160	360	15	108	42	110	45	12	6309-2Z	6209-2Z	45*72*10	45*72*10
11,0	2	Q3E160L2A	Alüminyum	302	576,0	2*M32	254	254	160	360	15	108	42	110	45	12	6309-2Z	6209-2Z	45*72*10	45*72*10
	4	Q3E160L4A	Alüminyum	302	576,0	2*M32	254	254	160	360	15	108	42	110	45	12	6309-2Z	6209-2Z	45*72*10	45*72*10
	6	Q3E160L6D	Alüminyum	302	576,0	2*M32	254	254	160	360	15	108	42	110	45	12	6309-2Z	6209-2Z	45*72*10	45*72*10
15,5	2	Q3E160L2C	Alüminyum	302	576,0	2*M32	254	254	160	360	15	108	42	110	45	12	6309-2Z	6209-2Z	45*72*10	45*72*10
	4	Q3E160L4B	Alüminyum	302	576,0	2*M32	254	254	160	360	15	108	42	110	45	12	6309-2Z	6209-2Z	45*72*10	45*72*10
	6	Q3E180L6B	Alüminyum	347	689,0	2*M40	279	279	180	452	15	121	48	110	51,5	14	6310-2Z	6310-2Z	50*80*10	50*80*10
18,5	2	Q3E160L2C	Alüminyum	302	576,0	2*M32	254	254	160	360	15	108	42	110	45	12	6309-2Z	6209-2Z	45*72*10	45*72*10
	4	Q3E180M4B	Alüminyum	370	629,0	2*M40	241	279	180	428	15	121	48	110	51,5	14	6310-2Z	6310-2Z	50*80*10	50*80*10
	6	Q3E200L6C	Alüminyum	415	665,0	2*M50	305	318	200	461	19	133	55	110	59	16	6312-2Z	6312-2Z	60*90*10	60*90*10

BOYUTLAR / DIMENSIONS - B3

				Ana Boyutlar Main Dimensions			Ayaklı Motorlar / Foot Mounted Motors						Mil / Shaft				Rulman / Bearing		Keçe / Seal	
Güç Power (kW)	Kutup Sayısı Number of Poles	Motor Tipi Motor Type	Gövde Tipi Housing Type	AC	L	O	B	A	H	HD	K	C	D (1)	E	GA	F (2)	Kasnak Tarafı Drive Side	Kasnak Tarafı Aksi Non Drive Side	Kasnak Tarafı Drive Side	Kasnak Tarafı Aksi Non Drive Side
22,0	2	Q3E160L2D	Alüminyum	302	576,0	2*M32	210	254	160	360	15	108	42	110	45	12	6309-2Z	6209-2Z	45*72*10	45*72*10
	2	Q3E180M2A	Alüminyum	370	629,0	2*M40	241	279	180	428	15	121	48	110	51,5	14	6310-2Z	6310-2Z	50*80*10	50*80*10
	4	Q3E180L4B	Alüminyum	370	629,0	2*M40	279	279	180	428	15	121	48	110	51,5	14	6310-2Z	6310-2Z	50*80*10	50*80*10
	6	Q3E200L6D	Alüminyum	415	665,0	2*M50	305	318	200	461	19	133	55	110	59	16	6312-2Z	6312-2Z	60*90*10	60*90*10
30,0	2	Q3E200L2B	Alüminyum	415	665,0	2*M50	305	318	200	461	19	133	55	110	59	16	6312-2Z	6310-2Z	60*90*10	50*80*10
	4	Q3E200L4D	Alüminyum	415	665,0	2*M50	311	318	200	461	19	133	55	110	59	16	6312-2Z	6310-2Z	60*90*10	50*80*10
	6	Q3E225M6C	Alüminyum	456	765,0	2*M40	311	356	225	485	19	149	60	140	64	18	6313-2Z	6313-2Z	65*100*13	65*100*13
37,0	2	Q3E200L2C	Alüminyum	415	665,0	2*M50	305	318	200	461	19	133	55	110	59	16	6312-2Z	6310-2Z	60*90*10	50*80*10
	4	Q3E225M4C	Alüminyum	456	765,0	2*M50	286	356	225	504	19	149	60	140	64	18	6313-2Z	6313-2Z	65*100*13	65*100*13
45,0	2	Q3E225M2B	Alüminyum	456	735,0	2*M50	311	356	225	504	19	149	55	110	59	16	6313-2Z	6313-2Z	65*100*13	65*100*13
	4	Q3E225M4D	Alüminyum	456	765,0	2*M50	311	356	225	504	19	149	60	140	64	18	6313-2Z	6313-2Z	65*100*13	65*100*13
55,0	2	Q3EP250M2C	Pik	527	886,0	2*M50	349	406	250	615	24	168	60	140	64	18	6316	6316	80*100*10	80*100*10
	4	Q3EP250M4E	Pik	527	886,0	2*M50	349	406	250	615	24	168	65	140	69	18	6316	6316	80*100*10	80*100*10
75,0	2	Q3EP280M2C	Pik	527	1025,0	2*M50	419	457	280	647	24	190	65	140	69	18	6316	6316	80*100*10	80*100*10
	4	Q3EP280M4C	Pik	527	1025,0	2*M50	419	457	280	647	24	190	75	140	80	20	6316	6316	80*100*10	80*100*10
90,0	2	Q3EP280M2D	Pik	527	1025,0	2*M50	419	457	280	647	24	190	65	140	69	18	6316	6316	80*100*10	80*100*10
	4	Q3EP280M4D	Pik	527	1025,0	2*M50	419	457	280	647	24	190	75	140	80	20	6316	6316	80*100*10	80*100*10
110,0	2	Q3EP315S2C	Pik	652	1176,0	2*M63	406	508	315	833	28	216	65	140	69	18	6316	6316	80*100*5.5	80*100*5.5
	4	Q3EP315S4C	Pik	652	1206,0	2*M63	406	508	315	833	28	216	80	170	85	22	6319	6319	95*115*5.5	95*115*5.5
132,0	2	Q3EP315M2B	Pik	652	1176,0	2*M63	457	508	315	833	28	216	65	140	69	18	6316	6316	80*100*5.5	80*100*5.5
	4	Q3EP315M4B	Pik	652	1206,0	2*M63	457	508	315	833	28	216	80	170	85	22	6319	6319	95*115*5.5	95*115*5.5
160,0	2	Q3EP315L2A	Pik	652	1287,0	2*M63	508	508	315	833	28	216	65	140	69	18	6316	6316	80*100*5.5	80*100*5.5
	4	Q3EP315L4A	Pik	652	1317,0	2*M63	508	508	315	833	28	216	80	170	85	22	6319	6319	95*115*5.5	95*115*5.5
200,0	2	Q3EP315L2C	Pik	652	1287,0	2*M63	508	508	315	833	28	216	65	140	69	18	6316	6316	80*100*5.5	80*100*5.5
	4	Q3EP315L4C	Pik	652	1317,0	2*M63	508	508	315	833	28	216	80	170	85	22	6319	6319	95*115*5.5	95*115*5.5
250,0	2	Q3EP355M2C	Pik	762	1512,0	4*M63	560	610	355	997	28	254	75	140	80	20	6317	6317	85*105*5.5	85*105*5.5
	4	Q3EP355M4C	Pik	762	1542,0	4*M63	560	610	355	997	28	254	95	170	100	25	6322	6322	110*130*5.5	110*130*5.5
315,0	2	Q3EP355L2B	Pik	762	1512,0	4*M63	630	610	355	997	28	254	75	140	80	20	6317	6317	85*105*5.5	85*105*5.5
	4	Q3EP355L4B	Pik	762	1542,0	4*M63	630	610	355	997	28	254	95	170	100	25	6322	6322	110*130*5.5	110*130*5.5
355,0	2	Q3EP355L2C	Pik	762	1512,0	4*M63	630	610	355	997	28	254	75	140	80	20	6317	6317	85*105*5.5	85*105*5.5
	4	Q3EP355L4C	Pik	762	1542,0	4*M63	630	610	355	997	28	254	95	170	100	25	6322	6322	110*130*5,5	110*130*5,5

(1) Toleranslar 28 mm'ye kadar DIN EN 50347 "j6", 28 mm ve üzeri "k6"
(2) DIN 6885'e göre

(1) Tolerance DIN EN 50347 "j6" up to 28 mm "k6" above 28 mm
(2) According to DIN 6885

BOYUTLAR / DIMENSIONS - B5, B35

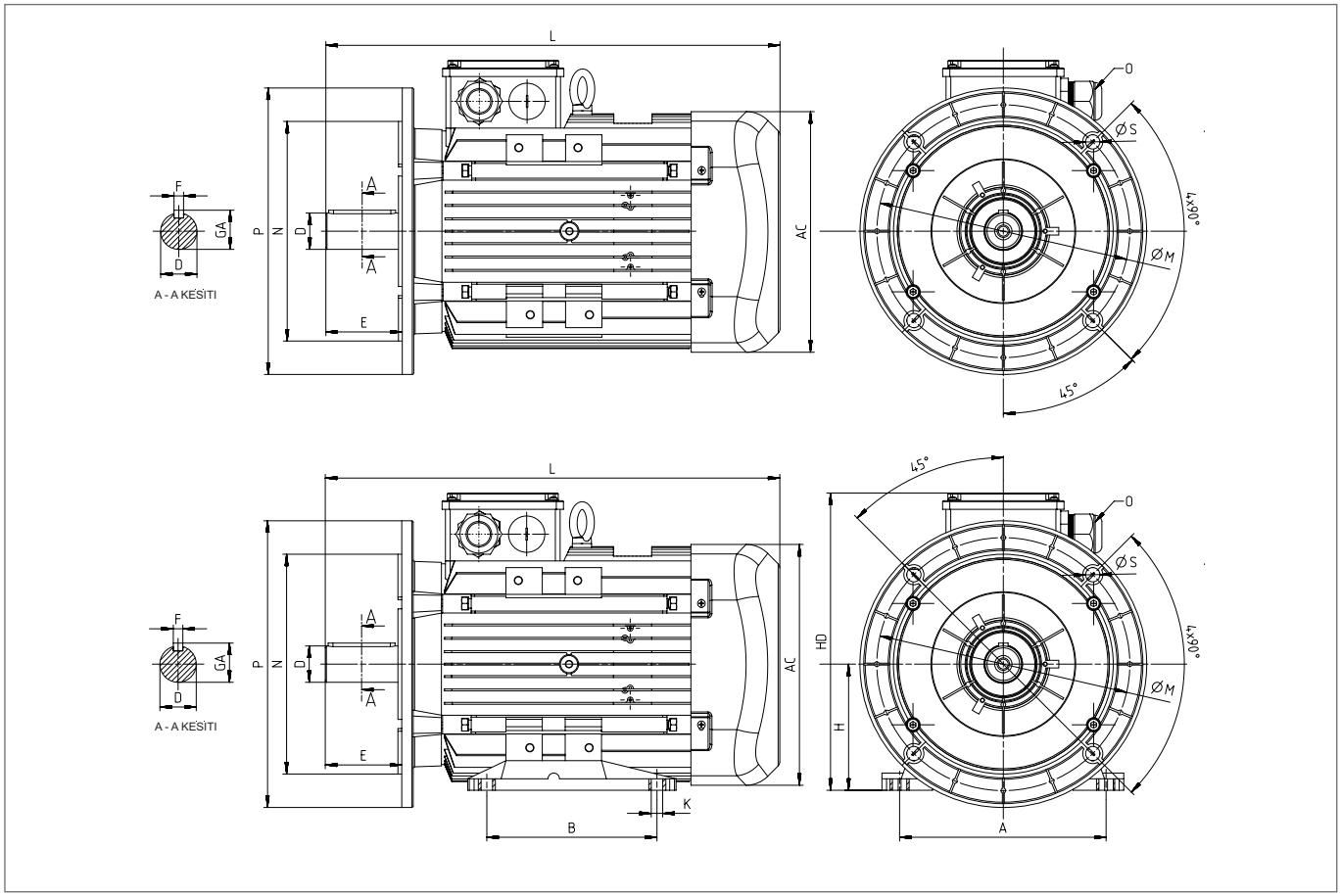

Güç Power (kW)	Kutup Sayısı Number of Poles	Motor Tipi Motor Type	Gövde Tipi Housing Type	Ana Boyutlar Main Dimesions			Ayaklı Motorlar Foot Mounted Motors					Mil / Shaft				Rulman / Bearing		Keçe / Seal		Flanş / Flange (FA) (B5)				
				AC	L	O	B	A	H	HD	K	D (1)	E	GA	F (2)	Kasnak Tarafı Drive Side	Kasnak Tarafı Aksi Non Drive Side	Kasnak Tarafı Drive Side	Kasnak Tarafı Aksi Non Drive Side	P	N (3)	M	R	S
0,75	2	Q3E80M2C	Alüminyum	158	283,5	1*M20	100	125	80	195	10	19	40	21,5	6	6204-2Z	6204-2Z	20*30*7	20*30*7	200	130	165	0	12
	4	Q3E80M4D	Alüminyum	158	283,5	1*M20	100	125	80	195	10	19	40	21,5	6	6204-2Z	6204-2Z	20*30*7	20*30*7	200	130	165	0	12
	6	Q3E90L6C	Alüminyum	193	316,5	1*M25	125	140	90	222	10	24	50	27	8	6305-2Z	6205-2Z	25*40*7	25*40*7	200	130	165	0	12
1,1	2	Q3E80M2D	Alüminyum	158	283,5	1*M20	100	125	80	195	10	19	40	21,5	6	6204-2Z	6204-2Z	20*30*7	20*30*7	200	130	165	0	12
	4	Q3E90L4C	Alüminyum	193	316,5	1*M25	100	140	90	222	10	24	50	27	8	6305-2Z	6205-2Z	25*40*7	25*40*7	200	130	165	0	12
	6	Q3E90L6D	Alüminyum	193	344,5	1*M25	125	140	90	222	10	24	50	27	8	6305-2Z	6205-2Z	25*40*7	25*40*7	200	130	165	0	12
1,5	2	Q3E90L2C	Alüminyum	193	316,5	1*M25	100	140	90	222	10	24	50	27	8	6305-2Z	6205-2Z	25*40*7	25*40*7	200	130	165	0	12
	4	Q3E90L4D	Alüminyum	193	344,5	1*M25	125	140	90	222	10	24	50	27	8	6305-2Z	6205-2Z	25*40*7	25*40*7	200	130	165	0	12
	6	Q3E100L6D	Alüminyum	217	352,0	1*M25	140	160	100	241	12	28	60	31	8	6306-2Z	6205-2Z	30*47*7	25*47*7	250	180	215	0	15
2,2	2	Q3E90L2D	Alüminyum	193	316,5	1*M25	125	140	90	222	10	24	50	27	8	6305-2Z	6205-2Z	25*40*7	25*40*7	200	130	165	0	12
	4	Q3E100L4C	Alüminyum	217	352,0	1*M25	140	160	100	241	12	28	60	31	8	6306-2Z	6205-2Z	30*47*7	25*40*7	250	180	215	0	15
	6	Q3E112M6D	Alüminyum	232	395,5	2*M25	140	190	112	261	12	28	60	31	8	6306-2Z	6206-2Z	30*47*7	30*47*7	250	180	215	0	15
3,0	2	Q3E100L2C	Alüminyum	217	352,0	1*M25	140	160	100	241	12	28	60	31	8	6306-2Z	6205-2Z	30*47*7	25*40*7	250	180	215	0	15
	4	Q3E100L4D	Alüminyum	217	377,0	1*M25	140	160	100	241	12	28	60	31	8	6306-2Z	6205-2Z	30*47*7	25*40*7	250	180	215	0	15
	6	Q3E132M6B	Alüminyum	260	481,0	2*M32	178	216	132	323	12	38	80	41	10	6208-2Z	6208-2Z	40*62*10	40*62*10	300	230	265	0	15
4,0	2	Q3E112M2C	Alüminyum	232	395,5	2*M25	140	190	112	261	12	28	60	31	8	6306-2Z	6206-2Z	30*47*7	30*47*7	250	180	215	0	15
	4	Q3E112M4C	Alüminyum	232	395,5	2*M25	140	190	112	261	12	28	60	31	8	6306-2Z	6206-2Z	30*47*7	30*47*7	250	180	215	0	15
	6	Q3E132M6C	Alüminyum	260	481,0	2*M32	178	216	132	323	12	38	80	41	10	6208-2Z	6208-2Z	40*62*10	40*62*10	300	230	265	0	15
5,5	2	Q3E132S2C	Alüminyum	279	440,5	2*M32	140	216	132	314	12	38	80	41	10	6208-2Z	6208-2Z	40*62*10	40*62*10	300	230	265	0	15
	4	Q3E132M4B	Alüminyum	279	475,5	2*M32	140	216	132	314	12	38	80	41	10	6208-2Z	6208-2Z	40*62*10	40*62*10	300	230	265	0	15
	6	Q3E132M6D	Alüminyum	260	481,0	2*M32	178	216	132	323	12	38	80	41	10	6208-2Z	6208-2Z	40*62*10	40*62*10	300	230	265	0	15
7,5	2	Q3E132M2A	Alüminyum	279	475,5	2*M32	140	216	132	314	12	38	80	41	10	6208-2Z	6208-2Z	40*62*10	40*62*10	300	230	265	0	15
	4	Q3E132M4C	Alüminyum	279	475,5	2*M32	178	216	132	314	12	38	80	41	10	6208-2Z	6208-2Z	40*62*10	40*62*10	300	230	265	0	15
	6	Q3E160L6C	Alüminyum	302	576,0	2*M32	254	254	160	360	15	42	110	45	12	6309-2Z	6209-2Z	45*72*10	45*72*10	350	250	300	0	19
11,0	2	Q3E160L2A	Alüminyum	302	576,0	2*M32	254	254	160	360	15	42	110	45	12	6309-2Z	6209-2Z	45*72*10	45*72*10	350	250	300	0	19
	4	Q3E160L4A	Alüminyum	302	576,0	2*M32	254	254	160	360	15	42	110	45	12	6309-2Z	6209-2Z	45*72*10	45*72*10	350	250	300	0	19
	6	Q3E160L6D	Alüminyum	302	576,0	2*M32	254	254	160	360	15	42	110	45	12	6309-2Z	6209-2Z	45*72*10	45*72*10	350	250	300	0	19

BOYUTLAR / DIMENSIONS - B5, B35

				Ana Boyutlar Main Dimesions			Ayaklı Motorlar Foot Mounted Motors					Mil / Shaft				Rulman / Bearing		Keçe / Seal		Flanş / Flange (FA) (B5)				
Güç Power (kW)	Kutup Sayısı Number of Poles	Motor Tipi Motor Type	Gövde Tipi Housing Type	AC	L	O	B	A	H	HD	K	D (1)	E	GA	F (2)	Kasnak Tarafı Drive Side	Kasnak Tarafı Aksi Non Drive Side	Kasnak Tarafı Drive Side	Kasnak Tarafı Aksi Non Drive Side	P	N (3)	M	R	S
15,0	2	Q3E160L2C	Alüminyum	302	576,0	2*M32	254	254	160	360	15	42	110	45	12	6309-2Z	6209-2Z	45*72*10	45*72*10	350	250	300	0	19
	4	Q3E160L4B	Alüminyum	302	576,0	2*M32	254	254	160	360	15	42	110	45	12	6309-2Z	6209-2Z	45*72*10	45*72*10	350	250	300	0	19
	6	Q3E180L6B	Alüminyum	347	689,0	2*M40	279	279	180	452	15	48	110	51,5	14	6310-2Z	6310-2Z	50*80*10	50*80*10	350	250	300	0	19
18,5	2	Q3E160L2C	Alüminyum	302	576,0	2*M32	254	254	160	360	15	42	110	45	12	6309-2Z	6209-2Z	45*72*10	45*72*10	350	250	300	0	19
	4	Q3E180M4B	Alüminyum	370	629,0	2*M40	241	279	180	428	15	48	110	51,5	14	6310-2Z	6310-2Z	50*80*10	50*80*10	350	250	300	0	19
	6	Q3E200L6C	Alüminyum	415	665,0	2*M50	305	318	200	461	19	55	110	59	16	6312-2Z	6312-2Z	60*90*10	60*90*10	400	300	350	0	19
22,0	2	Q3E160L2D	Alüminyum	302	576,0	2*M32	210	254	160	360	15	42	110	45	12	6309-2Z	6209-2Z	45*72*10	45*72*10	350	250	300	0	19
	2	Q3E180M2A	Alüminyum	370	629,0	2*M40	241	279	180	428	15	48	110	51,5	14	6310-2Z	6310-2Z	50*80*10	50*80*10	350	250	300	0	19
	4	Q3E180L4B	Alüminyum	370	629,0	2*M40	279	279	180	428	15	48	110	51,5	14	6310-2Z	6310-2Z	50*80*10	50*80*10	350	250	300	0	19
	6	Q3E200L6D	Alüminyum	415	665,0	2*M50	305	318	200	461	19	55	110	59	16	6312-2Z	6312-2Z	60*90*10	60*90*10	400	300	350	0	19
30,0	2	Q3E200L2B	Alüminyum	415	665,0	2*M50	305	318	200	461	19	55	110	59	16	6312-2Z	6310-2Z	60*90*10	50*80*10	400	300	350	0	19
	4	Q3E200L4D	Alüminyum	415	665,0	2*M50	305	318	200	461	19	55	110	59	16	6312-2Z	6310-2Z	60*90*10	50*80*10	400	300	350	0	19
	6	Q3E225M6C	Alüminyum	456	765,0	2*M40	311	356	225	485	19	60	140	64	18	6313-2Z	6313-2Z	65*100*13	65*100*13	450	350	400	0	19
37,0	2	Q3E200L2C	Alüminyum	415	665,0	2*M50	305	318	200	461	19	55	110	59	16	6312-2Z	6310-2Z	60*90*10	50*80*10	400	300	350	0	19
	4	Q3E225M4C	Alüminyum	456	765,0	2*M50	286	356	225	504	19	60	140	64	18	6313-2Z	6313-2Z	65*100*13	65*100*13	450	350	400	0	19
45,0	2	Q3E225M2B	Alüminyum	456	735,0	2*M50	311	356	225	504	19	55	110	59	16	6313-2Z	6313-2Z	65*100*13	65*100*13	450	350	400	0	19
	4	Q3E225M4D	Alüminyum	456	765,0	2*M50	311	356	225	504	19	60	140	64	18	6313-2Z	6313-2Z	65*100*13	65*100*13	450	350	400	0	19
55,0	2	Q3EP250M2C	Pik	527	886,0	2*M50	349	406	250	615	24	60	140	64	18	6316	6316	80*100*10	80*100*10	550	450	500	0	19
	4	Q3EP250M4E	Pik	527	886,0	2*M50	349	406	250	615	24	65	140	69	18	6316	6316	80*100*10	80*100*10	550	450	500	0	19
75,0	2	Q3EP280M2C	Pik	527	1025,0	2*M50	419	457	280	647	24	65	140	69	18	6316	6316	80*100*10	80*100*10	550	450	500	0	19
	4	Q3EP280M4C	Pik	527	1025,0	2*M50	419	457	280	647	24	75	140	80	20	6316	6316	80*100*10	80*100*10	550	450	500	0	19
90,0	4	Q3EP280M2D	Pik	527	1025,0	2*M50	419	457	280	647	24	65	140	69	18	6316	6316	80*100*10	80*100*10	550	450	500	0	19
	4	Q3EP280M4D	Pik	527	1025,0	2*M50	419	457	280	647	24	75	140	80	20	6316	6316	80*100*10	80*100*10	550	450	500	0	19
110,0	2	Q3EP315S2C	Pik	652	1176,0	2*M63	406	508	315	833	28	65	140	69	18	6316	6316	80*100*5.5	80*100*5.5	660	550	600	0	24
	4	Q3EP315S4C	Pik	652	1206,0	2*M63	406	508	315	833	28	80	170	85	22	6319	6319	95*115*5.5	95*115*5.5	660	550	600	0	24
132,0	2	Q3EP315M2B	Pik	652	1176,0	2*M63	457	508	315	833	28	65	140	69	18	6316	6316	80*100*5.5	80*100*5.5	660	550	600	0	24
	4	Q3EP315M4B	Pik	652	1206,0	2*M63	457	508	315	833	28	80	170	85	22	6319	6319	95*115*5.5	95*115*5.5	660	550	600	0	24
160,0	2	Q3EP315L2A	Pik	652	1287,0	2*M63	508	508	315	833	28	65	140	69	18	6316	6316	80*100*5.5	80*100*5.5	660	550	600	0	24
	4	Q3EP315L4A	Pik	652	1317,0	2*M63	508	508	315	833	28	80	170	85	22	6319	6319	95*115*5.5	95*115*5.5	660	550	600	0	24
200,0	2	Q3EP315L2C	Pik	652	1287,0	2*M63	508	508	315	833	28	65	140	69	18	6316	6316	80*100*5.5	80*100*5.5	660	550	600	0	24
	4	Q3EP315L4C	Pik	652	1317,0	2*M63	508	508	315	833	28	80	170	85	22	6319	6319	95*115*5.5	95*115*5.5	660	550	600	0	24
250,0	2	Q3EP355M2C	Pik	762	1512,0	4*M63	560	610	355	997	28	75	140	80	20	6317	6317	85*105*5.5	85*105*5.5	800	680	740	0	24
	4	Q3EP355M4C	Pik	762	1542,0	4*M63	560	610	355	997	28	95	170	100	25	6322	6322	110*130*5.5	110*130*5.5	800	680	740	0	24
315,0	2	Q3EP355L2B	Pik	762	1512,0	4*M63	630	610	355	997	28	75	140	80	20	6317	6317	85*105*5.5	85*105*5.5	800	680	740	0	24
	4	Q3EP355L4B	Pik	762	1542,0	4*M63	630	610	355	997	28	95	170	100	25	6322	6322	110*130*5.5	110*130*5.5	800	680	740	0	24
355,0	2	Q3EP355L2C	Pik	762	1512,0	4*M63	630	610	355	997	28	75	140	80	20	6317	6317	85*105*5,5	85*105*5,5	800	680	740	0	24
	4	Q3EP355L4C	Pik	762	1542,0	4*M63	630	610	355	997	28	95	170	100	25	6322	6322	110*130*5,5	110*130*5,5	800	680	740	0	24

(1) Toleranslar 28 mm'ye kadar DIN EN 50347 "j6", 28 mm ve üzeri "k6"
(2) DIN 6885'e göre
(3) Tolerans DIN EN 50347 "j6"

(1) Tolerance DIN EN 50347 "j6" up to 28 mm "k6" above 28 mm
(2) According to DIN 6885
(3) Tolerance DIN EN 50347 "j6"

BOYUTLAR / DIMENSIONS - B14a, B34a

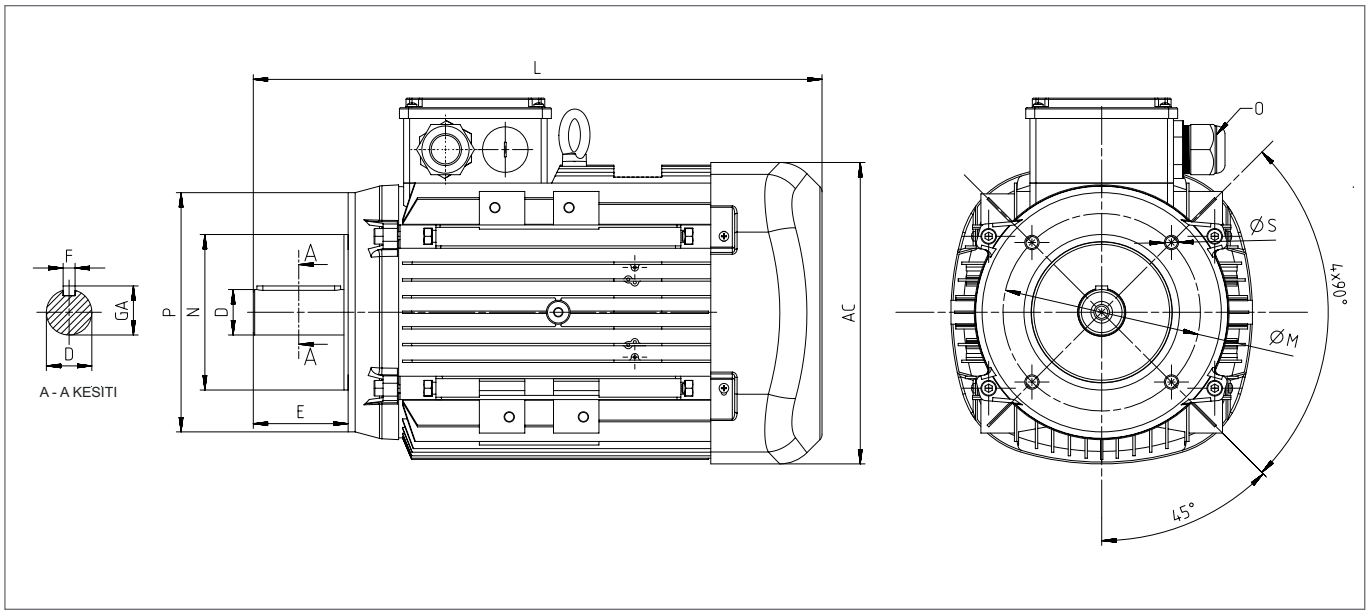

				Ana Boyutlar Main Dimesions			Ayaklı Motorlar Foot Mounted Motors					Mil / Shaft				Rulman / Bearing		Keçe / Seal		Flanş / Flange (FC) (B14a)				
Güç Power (kW)	Kutup Sayısı Number of Poles	Motor Tipi Motor Type	Gövde Tipi Housing Type	AC	L	O	B	A	H	HD	K	D (1)	E	GA	F (2)	Kasnak Tarafı Drive Side	Kasnak Tarafı Aksi Non Drive Side	Kasnak Tarafı Drive Side	Kasnak Tarafı Aksi Non Drive Side	P	N (3)	M	R	S
0,75	2	Q3E80M2C	Alüminyum	158	283,5	1*M20	100	125	80	195	10	19	40	21,5	6	6204-2Z	6204-2Z	20*30*7	20*30*7	120	80	100	0	M6
	4	Q3E80M4D	Alüminyum	158	283,5	1*M20	100	125	80	195	10	19	40	21,5	6	6204-2Z	6204-2Z	20*30*7	20*30*7	120	80	100	0	M6
	6	Q3E90L6C	Alüminyum	193	316,5	1*M25	125	140	90	222	10	24	50	27	8	6305-2Z	6205-2Z	25*40*7	25*40*7	200	130	165	0	12
1,1	2	Q3E80M2D	Alüminyum	158	283,5	1*M20	100	125	80	195	10	19	40	21,5	6	6204-2Z	6204-2Z	20*30*7	20*30*7	120	80	100	0	M6
	4	Q3E90L4C	Alüminyum	193	316,5	1*M25	100	140	90	222	10	24	50	27	8	6305-2Z	6205-2Z	25*40*7	25*40*7	140	95	115	0	M8
	6	Q3E90L6D	Alüminyum	193	344,5	1*M25	125	140	90	222	10	24	50	27	8	6305-2Z	6205-2Z	25*40*7	25*40*7	200	130	165	0	12
1,5	2	Q3E90L2C	Alüminyum	193	316,5	1*M25	100	140	90	222	10	24	50	27	8	6305-2Z	6205-2Z	25*40*7	25*40*7	140	95	115	0	M8
	4	Q3E90L4D	Alüminyum	193	344,5	1*M25	125	140	90	222	10	24	50	27	8	6305-2Z	6205-2Z	25*40*7	25*40*7	140	95	115	0	M8
	6	Q3E100L6D	Alüminyum	217	352,0	1*M25	140	160	100	241	12	28	60	31	8	6306-2Z	6205-2Z	30*47*7	25*47*7	250	180	215	0	15
2,2	2	Q3E90L2D	Alüminyum	193	316,5	1*M25	125	140	90	222	10	24	50	27	8	6305-2Z	6205-2Z	25*40*7	25*40*7	140	95	115	0	M8
	4	Q3E100L4C	Alüminyum	217	352,0	1*M25	140	160	100	241	12	28	60	31	8	6306-2Z	6205-2Z	30*47*7	25*40*7	160	110	130	0	M8
	6	Q3E112M6D	Alüminyum	232	395,5	2*M25	140	190	112	261	12	28	60	31	8	6306-2Z	6206-2Z	30*47*7	30*47*7	250	180	215	0	15
3,0	2	Q3E100L2C	Alüminyum	217	352,0	1*M25	140	160	100	241	12	28	60	31	8	6306-2Z	6205-2Z	30*47*7	25*40*7	160	110	130	0	M8
	4	Q3E100L4D	Alüminyum	217	377,0	1*M25	140	160	100	241	12	28	60	31	8	6306-2Z	6205-2Z	30*47*7	25*40*7	160	110	130	0	M8
	6	Q3E132M6B	Alüminyum	260	481,0	2*M32	178	216	132	323	12	38	80	41	10	6208-2Z	6208-2Z	40*62*10	40*62*10	300	230	265	0	15
4,0	2	Q3E112M2C	Alüminyum	232	395,5	2*M25	140	190	112	261	12	28	60	31	8	6306-2Z	6206-2Z	30*47*7	30*47*7	160	110	130	0	M8
	4	Q3E112M4C	Alüminyum	232	395,5	2*M25	140	190	112	261	12	28	60	31	8	6306-2Z	6206-2Z	30*47*7	30*47*7	160	110	130	0	M8
	6	Q3E132M6C	Alüminyum	260	481,0	2*M32	178	216	132	323	12	38	80	41	10	6208-2Z	6208-2Z	40*62*10	40*62*10	300	230	265	0	15
5,5	2	Q3E132S2C	Alüminyum	279	440,5	2*M32	140	216	132	314	12	38	80	41	10	6208-2Z	6208-2Z	40*62*10	40*62*10	200	130	165	0	M10
	4	Q3E132M4B	Alüminyum	279	475,5	2*M32	140	216	132	314	12	38	80	41	10	6208-2Z	6208-2Z	40*62*10	40*62*10	200	130	165	0	M10
	6	Q3E132M6D	Alüminyum	260	481,0	2*M32	178	216	132	323	12	38	80	41	10	6208-2Z	6208-2Z	40*62*10	40*62*10	300	230	265	0	15
7,5	2	Q3E132M2A	Alüminyum	279	475,5	2*M32	140	216	132	314	12	38	80	41	10	6208-2Z	6208-2Z	40*62*10	40*62*10	200	130	165	0	M10
	4	Q3E132M4C	Alüminyum	279	475,5	2*M32	178	216	132	314	12	38	80	41	10	6208-2Z	6208-2Z	40*62*10	40*62*10	200	130	165	0	M10

(1) Toleranslar 28 mm'ye kadar DIN EN 50347 "j6", 28 mm ve üzeri "k6"
(2) DIN 6885'e göre
(3) Tolerans DIN EN 50347 "j6"

(1) Tolerance DIN EN 50347 "j6" up to 28 mm "k6" above 28 mm
(2) According to DIN 6885
(3) Tolerance DIN EN 50347 "j6"

BOYUTLAR / DIMENSIONS - B14b, B34b

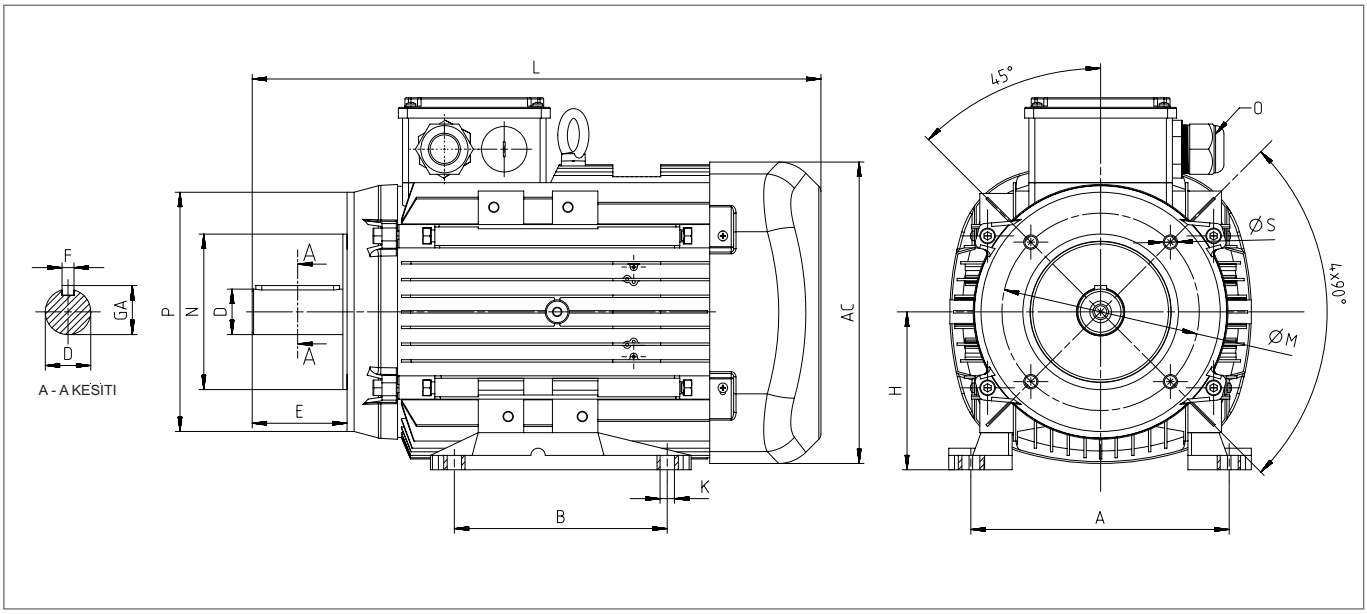

Güç Power (kW)	Kutup Sayısı Number of Poles	Motor Tipi Motor Type	Gövde Tipi Housing Type	Ana Boyutlar Main Dimesions			Ayaklı Motorlar Foot Mounted Motors					Mil / Shaft				Rulman / Bearing		Keçe / Seal		Flanş / Flange (FB) (B14b)				
				AC	L	O	B	A	H	HD	K	D (1)	E	GA	F (2)	Kasnak Tarafı Drive Side	Kasnak Tarafı Aksi Non Drive Side	Kasnak Tarafı Drive Side	Kasnak Tarafı Aksi Non Drive Side	P	N (3)	M	R	S
0,75	2	Q3E80M2C	Alüminyum	158	283,5	1*M20	100	125	80	195	10	19	40	21,5	6	6204-2Z	6204-2Z	20*30*7	20*30*7	160	110	130	0	M8
	4	Q3E80M4D	Alüminyum	158	283,5	1*M20	100	125	80	195	10	19	40	21,5	6	6204-2Z	6204-2Z	20*30*7	20*30*7	160	110	130	0	M8
	6	Q3E90L6C	Alüminyum	193	316,5	1*M25	125	140	90	222	10	24	50	27	8	6305-2Z	6205-2Z	25*40*7	25*40*7	200	130	165	0	12
1,1	2	Q3E80M2D	Alüminyum	158	283,5	1*M20	100	125	80	195	10	19	40	21,5	6	6204-2Z	6204-2Z	20*30*7	20*30*7	160	110	130	0	M8
	4	Q3E90L4C	Alüminyum	193	316,5	1*M25	100	140	90	222	10	24	50	27	8	6305-2Z	6205-2Z	25*40*7	25*40*7	160	110	130	0	M8
	6	Q3E90L6D	Alüminyum	193	344,5	1*M25	125	140	90	222	10	24	50	27	8	6305-2Z	6205-2Z	25*40*7	25*40*7	200	130	165	0	12
1,5	2	Q3E90L2C	Alüminyum	193	316,5	1*M25	100	140	90	222	10	24	50	27	8	6305-2Z	6205-2Z	25*40*7	25*40*7	160	110	130	0	M8
	4	Q3E90L4D	Alüminyum	193	344,5	1*M25	125	140	90	222	10	24	50	27	8	6305-2Z	6205-2Z	25*40*7	25*40*7	160	110	130	0	M8
	6	Q3E100L6D	Alüminyum	217	352,0	1*M25	140	160	100	241	12	28	60	31	8	6306-2Z	6205-2Z	30*47*7	25*47*7	250	180	215	0	15
2,2	2	Q3E90L2D	Alüminyum	193	316,5	1*M25	125	140	90	222	10	24	50	27	8	6305-2Z	6205-2Z	25*40*7	25*40*7	160	110	130	0	M8
	4	Q3E100L4C	Alüminyum	217	352,0	1*M25	140	160	100	241	12	28	60	31	8	6306-2Z	6205-2Z	30*47*7	25*40*7	200	130	165	0	M10
	6	Q3E112M6D	Alüminyum	232	395,5	2*M25	140	190	112	261	12	28	60	31	8	6306-2Z	6206-2Z	30*47*7	30*47*7	250	180	215	0	15
3,0	2	Q3E100L2C	Alüminyum	217	352,0	1*M25	140	160	100	241	12	28	60	31	8	6306-2Z	6205-2Z	30*47*7	25*40*7	200	130	165	0	M10
	4	Q3E100L4D	Alüminyum	217	377,0	1*M25	140	160	100	241	12	28	60	31	8	6306-2Z	6205-2Z	30*47*7	25*40*7	200	130	165	0	M10
	6	Q3E132M6B	Alüminyum	260	481,0	2*M32	178	216	132	323	12	38	80	41	10	6208-2Z	6208-2Z	40*62*10	40*62*10	300	230	265	0	15
4,0	2	Q3E112M2C	Alüminyum	232	395,5	2*M25	140	190	112	261	12	28	60	31	8	6306-2Z	6206-2Z	30*47*7	30*47*7	200	130	165	0	M10
	4	Q3E112M4C	Alüminyum	232	395,5	2*M25	140	190	112	261	12	28	60	31	8	6306-2Z	6206-2Z	30*47*7	30*47*7	200	130	165	0	M10
	6	Q3E132M6C	Alüminyum	260	481,0	2*M32	178	216	132	323	12	38	80	41	10	6208-2Z	6208-2Z	40*62*10	40*62*10	300	230	265	0	15
5,5	2	Q3E132S2C	Alüminyum	279	440,5	2*M32	140	216	132	314	12	38	80	41	10	6208-2Z	6208-2Z	40*62*10	40*62*10	250	180	215	0	M12 veya 15
	4	Q3E132M4B	Alüminyum	279	475,5	2*M32	140	216	132	314	12	38	80	41	10	6208-2Z	6208-2Z	40*62*10	40*62*10	250	180	215	0	M12 veya 15
	6	Q3E132M6D	Alüminyum	260	481,0	2*M32	178	216	132	323	12	38	80	41	10	6208-2Z	6208-2Z	40*62*10	40*62*10	300	230	265	0	15
7,5	2	Q3E132M2A	Alüminyum	279	475,5	2*M32	140	216	132	314	12	38	80	41	10	6208-2Z	6208-2Z	40*62*10	40*62*10	250	180	215	0	M12 veya 15
	4	Q3E132M4C	Alüminyum	279	475,5	2*M32	178	216	132	314	12	38	80	41	10	6208-2Z	6208-2Z	40*62*10	40*62*10	250	180	215	0	M12 veya 15

(1) Toleranslar 28 mm'ye kadar DIN EN 50347 "j6", 28 mm ve üzeri "k6"
(2) DIN 6885'e göre
(3) Tolerans DIN EN 50347 "j6"

(1) Tolerance DIN EN 50347 "j6" up to 28 mm "k6" above 28 mm
(2) According to DIN 6885
(3) Tolerance DIN EN 50347 "j6"

ELEKTRİKSEL ÖZELLİKLER - 50 Hz / ELECTRICAL CHARACTERISTICS AT 50 Hz

	Motor Tipi Motor Type	Gövde Tipi Housing Type	Nominal / Rated Values					Kalkıştaki Değerler / Starting Values				Devrilme Momenti Oranı Brakedown Torque Ratio	Verim * Efficiency* η%			Cos ϕ	J	Ağırlık (B3) Weight (B3)	Ses Seviyesi dBA** Sound Pressure Level dBA**
			Güç / Power		Devir Speed	Akım Current	Moment Torque	Akım Current I_A / A_N		Moment Torque M_A / M_N									
			kW	HP	d/d	A	Nm	⅄	Δ	⅄	Δ	Mk/Mn	4/4	3/4	2/4	4/4	kgm²	kg	
	2kutup3000d/d																		
220/380V	Q2E71M2C*	Alüminyum	0,37	1/2	2850	1,0	1,2	7,7	-	3,6	-	3,8	69,5	69,6	67,3	0,80	0,00067	8	54
	Q2E71M2D*	Alüminyum	0,55	3/4	2860	1,2	1,8	7,8	-	3,7	-	3,9	74,1	74,2	72,0	0,82	0,00086	9,7	54
	Q2E80M2B	Alüminyum	0,75	1,0	2860	1,7	2,5	7,7	-	3,7	-	4,0	77,4	77,0	73,6	0,84	0,00109	11	58
	Q2E80M2D	Alüminyum	1,1	1,5	2860	2,4	3,6	7,7	-	3,7	-	4,1	79,6	79,1	77,1	0,84	0,00150	13	58
	Q2E90L2C	Alüminyum	1,5	2,0	2900	3,2	5,0	7,8	-	3,4	-	4,0	81,3	80,8	77,7	0,83	0,00182	17	62
	Q2E90L2D	Alüminyum	2,2	3,0	2900	4,7	7,3	7,9	-	3,5	-	4,1	83,2	82,9	80,5	0,84	0,00182	18	62
	Q2E100L2C	Alüminyum	3,0	4,0	2875	6,0	9,9	9,1	-	3,9	-	4,6	84,6	84,5	83,1	0,90	0,00335	21	64
380/660V	Q2E112M2C	Alüminyum	4,0	5,5	2900	7,7	13,2	2,9	8,6	1,3	3,8	4,5	85,8	85,7	84,3	0,88	0,00489	31	67
	Q2E132S2C	Alüminyum	5,5	7,5	2900	10,4	18,0	3,0	8,9	1,1	3,2	4,2	87,0	86,9	85,2	0,91	0,01410	46	70
	Q2E132M2A	Alüminyum	7,5	10,0	2920	13,6	24,5	2,9	8,6	1,0	3,0	3,7	88,1	87,7	85,9	0,90	0,01596	53	70
	Q2E160M2B	Alüminyum	11,0	15,0	2930	20,3	35,9	3,1	9,4	1,0	3,0	3,8	89,4	89,3	87,5	0,91	0,02644	76	71
	Q2E160L2A	Alüminyum	15,0	20,0	2930	27,0	48,7	2,9	8,6	1,0	3,0	3,3	90,3	90,2	88,4	0,93	0,03317	82	71
	Q2E160L2C	Alüminyum	18,5	25,0	2930	32,8	60,0	3,3	10,0	0,5	1,4	4,3	90,9	90,8	89,0	0,91	0,04075	90	71
	Q2E180M2A	Alüminyum	22,0	30,0	2945	38,7	71,3	2,6	7,9	0,7	2,2	3,4	91,3	90,9	89,5	0,91	0,06193	114	77
	Q2E200L2B	Alüminyum	30,0	40,0	2955	56,6	97,1	2,6	7,9	0,6	1,9	4,1	92,0	91,4	89,6	0,86	0,11917	167	80
	Q2E200L2C	Alüminyum	37,0	50,0	2955	66,8	119,4	2,8	8,3	0,6	1,9	3,1	92,5	91,9	90,1	0,91	0,15010	167	80
	Q2E225M2B	Alüminyum	45,0	60,0	2965	85,7	145,2	2,8	8,3	0,7	2,2	3,4	92,9	92,6	91,1	0,86	0,23505	235	81
	Q2EP250M2B	Pik	55,0	75,0	2970	97,9	178,5	1,7	5,1	0,7	2,1	3,1	93,2	92,1	90,9	0,91	0,48707	486	82
	Q2EP280M2B	Pik	75,0	100,0	2970	135,0	241,1	3,0	9,1	0,7	2,1	2,6	93,8	93,7	92,5	0,90	0,54033	576	84
	Q2EP280M2C	Pik	90,0	125,0	2970	156,5	291,3	3,3	10,0	1,1	3,2	3,6	94,1	93,9	92,9	0,93	0,64510	585	84
400/690V	Q2EP315S2C	Pik	110,0	127,0	2.975	185	353	2,6	7,8	0,7	2,2	2,4	94,3	94,3	93,1	0,91	1,43600	920	87
	Q2EP315M2C	Pik	132,0	152,0	2.975	221	423	2,6	7,8	0,8	2,3	2,4	94,6	94,6	93,4	0,91	1,72300	970	87
	Q2EP315L2C	Pik	160,0	184,0	2.975	268	513	2,5	7,5	0,8	2,3	2,4	94,8	94,8	93,6	0,91	1,95300	1.170	87
	Q2EP315L2D	Pik	200,0	230,0	2.975	334	643	2,7	8,0	0,8	2,4	2,6	95,0	95,0	93,8	0,91	2,52700	1.200	87
	Q2EP355M2C	Pik	250,0	280,0	2.985	422	799	2,3	7,0	0,7	2,0	2,4	95,0	95,0	93,8	0,90	3,92000	1.690	87
	Q2EP355L2C	Pik	315,0	353,0	2.985	532	1.007	2,5	7,4	0,7	2,0	2,3	95,0	95,0	93,8	0,90	4,17000	1.870	87
	Q2EP355L2D	Pik	355,0	398,0	2.985	599	1.135	2,5	7,5	0,6	1,8	2,1	95,0	95,0	93,8	0,90	4,44000	1.953	87
	4kutup1500d/d																		
220/380V	Q2E71M4C*	Alüminyum	0,25	1/3	1415	0,7	1,7	4,4	-	2,3	-	3,4	68,5	68,8	68,8	0,74	0,00095	9	45
	Q2E71M4D*	Alüminyum	0,37	1/2	1415	1,1	2,5	4,4	-	2,3	-	3,4	72,7	73,1	72,0	0,75	0,00095	8,5	45
	Q2E80M4B*	Alüminyum	0,55	3/4	1415	1,5	3,7	4,8	-	2,8	-	3,2	77,1	77,6	76,4	0,76	0,00205	10,5	49
	Q2E80M4D	Alüminyum	0,75	1,0	1435	2	5,1	5,2	-	2,9	-	3,2	79,6	78,9	75,3	0,7	0,00268	12	49
	Q2E90L4C	Alüminyum	1,1	1,5	1430	2,5	7,4	6,7	-	2,9	-	3,3	81,4	80,8	78,1	0,81	0,00365	18	54
	Q2E90L4D	Alüminyum	1,5	2,0	1430	3,5	10,0	7,0	-	3,2	-	3,6	82,8	82,0	79,3	0,76	0,00365	18	55
	Q2E100L4C	Alüminyum	2,2	3,0	1430	5,0	14,6	7,1	-	3,9	-	4,2	84,3	83,8	81,2	0,77	0,00545	26	56
	Q2E100L4D	Alüminyum	3,0	4,0	1440	6,4	20,0	7,1	-	3,4	-	3,8	85,5	85,1	83,0	0,75	0,00581	26	56
380/660V	Q2E112M4C	Alüminyum	4,0	5,5	1440	8,7	26,3	2,6	7,9	0,9	2,8	3,9	86,6	86,0	84,5	0,81	0,01123	31	58
	Q2E132M4B	Alüminyum	5,5	7,5	1450	11,7	36,2	2,4	7,1	1,1	3,2	3,9	87,7	87,6	85,2	0,81	0,02763	54	61
	Q2E132M4C	Alüminyum	7,5	10,0	1450	15,8	49,4	2,9	8,7	0,9	2,8	4,1	88,7	88,5	86,6	0,80	0,02980	57	61
	Q2E160M4B	Alüminyum	11,0	15,0	1460	22,5	72,5	2,0	6,0	0,7	2,2	2,7	89,8	89,7	88,2	0,83	0,05547	76	63
	Q2E160L4A	Alüminyum	15,0	20,0	1460	28,8	98,5	2,0	6,0	0,8	2,3	2,7	90,6	90,5	89,5	0,83	0,06922	92	63
	Q2E180M4B	Alüminyum	18,5	25,0	1465	36,5	121,4	2,5	7,4	1,0	3,0	4,1	91,2	91,1	90,2	0,84	0,11220	119	69
	Q2E180L4B	Alüminyum	22,0	30,0	1465	44,5	143,5	2,6	7,7	0,8	2,4	3,4	91,6	91,5	90,6	0,82	0,12773	127	69
	Q2E200L4D	Alüminyum	30,0	40,0	1465	57,3	195,6	2,4	7,3	0,8	2,5	3,2	92,3	92,1	91,1	0,86	0,26448	177	70
	Q2E225M4C	Alüminyum	37,0	50,0	1480	70,7	240,0	2,5	7,5	1,0	2,9	3,5	92,7	92,6	91,5	0,84	0,36429	260	71
	Q2E225M4D	Alüminyum	45,0	60,0	1470	85,9	292,3	2,6	7,7	1,0	2,9	3,5	93,1	93,0	91,9	0,85	0,43513	280	71
	Q2EP250M4D	Pik	55,0	75,0	1480	105,0	359,0	2,4	7,1	0,7	2,1	2,9	93,5	93,2	90,7	0,83	0,90782	506	72
	Q2EP280M4B	Pik	75,0	100,0	1475	147,0	485,7	2,5	7,4	0,7	2,1	3,1	94,0	93,9	93,2	0,85	1,06114	624	73
	Q2EP280M4C	Pik	90,0	125,0	1470	173,8	584,2	2,5	7,4	0,7	2,1	3,0	94,2	94,4	93,6	0,85	1,14768	638	73

ELEKTRİKSEL ÖZELLİKLER - 50 Hz / ELECTRICAL CHARACTERISTICS AT 50 Hz

	Motor Tipi Motor Type	Gövde Tipi Housing Type	Nominal / Rated Values					Kalkıştaki Değerler / Starting Values				Devrilme Momenti Oranı Brakedown Torque Ratio	Verim * Efficiency* η%			Cos ϕ	J	Ağırlık (B3) Weight (B3)	Ses Seviyesi dBA** Sound Pressure Level dBA**
			Güç / Power		Devir Speed	Akım Current	Moment Torque	Akım Current I_A / A_N		Moment Torque M_A / M_N									
			kW	HP	d/d	A	Nm	⅄	Δ	⅄	Δ	Mk/Mn	4/4	3/4	2/4	4/4	kgm²	kg	
	4kutup1500d/d																		
400/690V	Q2EP315S4C	Pik	110,0	127,0	1.480	191	709	2,4	7,2	0,7	2,2	2,5	94,5	94,5	93,9	0,88	3,03500	925	70
400/690V	Q2EP315M4C	Pik	132,0	152,0	1.480	229	851	2,3	7,0	0,7	2,1	2,4	94,7	94,7	94,1	0,88	3,41500	1.010	70
400/690V	Q2EP315L4C	Pik	160,0	184,0	1.480	273	1.032	2,5	7,5	0,7	2,2	2,5	94,9	94,9	94,3	0,89	4,11900	1.080	76
400/690V	Q2EP315L4D	Pik	200,0	230,0	1.480	341	1.290	2,5	7,5	0,8	2,3	2,5	95,1	95,1	94,5	0,89	5,20300	1.200	76
400/690V	Q2EP355M4C	Pik	250,0	280,0	1.485	426	1.607	2,6	7,9	0,8	2,3	2,5	95,1	95,1	94,5	0,89	8,79000	1.720	76
400/690V	Q2EP355L4C	Pik	315,0	353,0	1.485	531	2.025	2,5	7,4	0,7	2,0	2,3	95,1	95,1	94,5	0,90	10,13300	1.920	87
400/690V	Q2EP355L4D	Pik	355,0	398,0	1.485	605	2.283	2,9	8,8	0,6	1,8	2,0	95,1	95,1	94,5	0,89	10,67800	1.953	87
	6kutup1000d/d																		
220/380V	Q2E90L6C	Alüminyum	0,75	1,0	940	2,6	7,7	4,0	-	2,3	-	2,5	75.9	74,7	73,2	0,68	0,00371	18	53
220/380V	Q2E90L6D	Alüminyum	1,1	1,5	940	3,2	11,3	4,0	-	2,6	-	2,6	78,1	77,6	74,8	0,65	0,00444	20	53
220/380V	Q2E100L6D	Alüminyum	1,5	2,0	940	4	15,3	4,5	-	2,4	-	2,7	79,8	79,3	76,4	0,71	0,00570	26	56
220/380V	Q2E112M6C	Alüminyum	2,2	3,0	950	5,4	22,1	5,0	-	2,3	-	2,7	81,8	81,2	78,3	0,71	0,00916	31	58
380/660V	Q2E132M6A	Alüminyum	3,0	4,0	945	7,3	29,8	1,7	5,2	1,0	3,0	3,0	83,3	82,3	79,4	0,64	0,02057	53	62
380/660V	Q2E132M6B	Alüminyum	4,0	5,5	965	10,5	39,8	1,8	5,3	0,6	1,9	2,3	84,6	83,5	80,7	0,65	0,02070	54	62
380/660V	Q2E132M6C	Alüminyum	5,5	7,5	945	13,1	54,7	1,6	4,9	0,8	2,4	2,6	86,1	85,7	83,9	0,76	0,02709	67	62
380/660V	Q2E160L6B	Alüminyum	7,5	10,0	965	18,7	74,6	2,0	6,0	1,1	3,2	3,4	87,2	84,3	81,7	0,66	0,07040	94	63
380/660V	Q2E160L6C	Alüminyum	11,0	15,0	960	25,1	109,4	1,6	4,9	0,9	2,7	2,8	88,7	88,5	86,3	0,74	0,07040	95,5	63
380/660V	Q2E180L6A	Alüminyum	15,0	20,0	960	31,8	147,7	2,0	5,9	0,6	1,8	2,6	89,7	89,5	87,3	0,80	0,18369	115	64
380/660V	Q2E200L6B	Alüminyum	18,5	25,0	970	38,0	182,2	1,8	5,5	0,5	1,6	2,4	90,4	90,2	89,6	0,83	0,27088	155	64
380/660V	Q2E200L6C	Alüminyum	22,0	30,0	970	45,6	216,6	1,8	5,5	0,5	1,6	2,4	90,9	90,7	90,1	0,83	0,31281	165	64
380/660V	Q2E225M6B	Alüminyum	30,0	40,0	980	60,9	287,6	1,8	5,4	0,5	1,6	2,3	91,7	91,6	90,7	0,82	0,49334	221	65

*** IEC 60034-2-1'e göre belirlenen verim değerleri**
**** Ses seviyesi ölçümleri motordan 1 metre uzaklıktan alınır.**
**** Tolerans + 3 dBA**

*** According to IEC 60034-2-1**
**** The sound pressure measurement are taken 1 m away from the motor.**
**** Tolerance + 3 dBA**

ELEKTRİKSEL ÖZELLİKLER - 50 Hz / ELECTRICAL CHARACTERISTICS AT 50 Hz

	Motor Tipi Motor Type	Gövde Tipi Housing Type	Nominal / Rated Values					Kalkıştaki Değerler / Starting Values				Devrilme Momenti Oranı Brakedown Torque Ratio	Verim * Efficiency* η%			Cosϕ	J	Ağırlık (B3) Weight (B3)	Ses Seviyesi dBA** Sound Pressure Level dBA**
			Güç / Power		Devir Speed	Akım Current	Moment Torque	Akım Current I_A / A_N		Moment Torque M_A / M_N									
			kW	HP	d/d	A	Nm	⅄	Δ	⅄	Δ	Mk/Mn	4/4	3/4	2/4	4/4	kgm²	kg	
	2kutup3000d/d																		
220/380V	Q2E71M2DE	Alüminyum	0,75	1,0	2870	1,7	2,4	8,8	-	5,0	-	5,2	77,4	77,5	75,9	0,77	0,00110	11	56
220/380V	Q2E80M2DE	Alüminyum	1,5	2,0	2875	3,0	5,0	8,1	-	4,0	-	4,3	81,5	82,0	80,9	0,76	0,00150	13	58
220/380V	Q2E90L2DE	Alüminyum	3,0	4,0	2880	6,1	9,9	8,3	-	4,0	-	4,5	84,6	84,1	80,8	0,75	0,00182	18	62
380/660V	Q2E100L2DE	Alüminyum	4,0	5,5	2900	7,9	13,3	3,0	9,3	1,4	4,3	5,2	85,9	86,0	84,1	0,77	0,00335	27	64
380/660V	Q2E112M2CE	Alüminyum	5,5	7,5	2910	9,1	17,9	3,1	9,5	1,4	4,2	5,0	86,3	86,5	84,7	0,87	0,00489	31	67
380/660V	Q2E132M2AE	Alüminyum	11,0	15,0	2923	13,6	24,5	2,9	9,0	1,2	3,6	4,0	88,3	87,9	86,1	0,89	0,01596	53	70
380/660V	Q2E160L2DE	Alüminyum	22,0	30,0	2943	31,4	60,0	2,6	8,2	1,1	3,3	3,9	91,4	91,8	91,2	0,92	0,04075	92	71
380/660V	Q2EP250M2C	Pik	75,0	100,0	2975	125,4	241,1	2,5	7,5	0,8	2,8	3,3	93,8	93,7	92,5	0,92	0,54033	576	84
380/660V	Q2EP280M2D	Pik	110,0	150,0	2980	191,0	352,4	2,6	7,7	0,9	2,9	3,4	94,3	94,3	93,6	0,88	0,74111	640	84
	4kutup1500d/d																		
220/380V	Q2E80M4DE	Alüminyum	1,1	1,5	1438	1,9	4,9	5,5	-	3,2	-	3,5	79,9	79,4	76,3	0,72	0,00268	12,5	49
220/380V	Q2E90L4DE	Alüminyum	2,2	3,0	1440	4,8	14,5	7,5	-	3,5	-	4,0	84,3	83,5	80,6	0,70	0,00365	18	54
380/660V	Q2E112M4DE	Alüminyum	5,5	7,5	1458	8,5	26,2	2,8	8,6	1,1	3,2	4,3	86,7	86,7	85,1	0,77	0,01123	34	58
380/660V	Q2EP250M4E	Pik	75,0	100,0	1485	134,2	485,7	2,6	7,8	0,8	2,9	3,4	94,0	93,9	93,2	0,86	1,06114	624	73
380/660V	Q2EP280M4D	Pik	110,0	150,0	1485	200,3	714,0	2,8	7,9	0,8	2,9	3,4	94,5	94,3	93,1	0,84	1,25586	654	73

*** IEC 60034-2-1'e göre belirlenen verim değerleri**
**** Ses seviyesi ölçümleri motordan 1 metre uzaklıktan alınır.**
**** Tolerans + 3 dBA**

*** According to IEC 60034-2-1**
**** The sound pressure measurement are taken 1 m away from the motor.**
**** Tolerance + 3 dBA**

BOYUTLAR / DIMENSIONS - B3

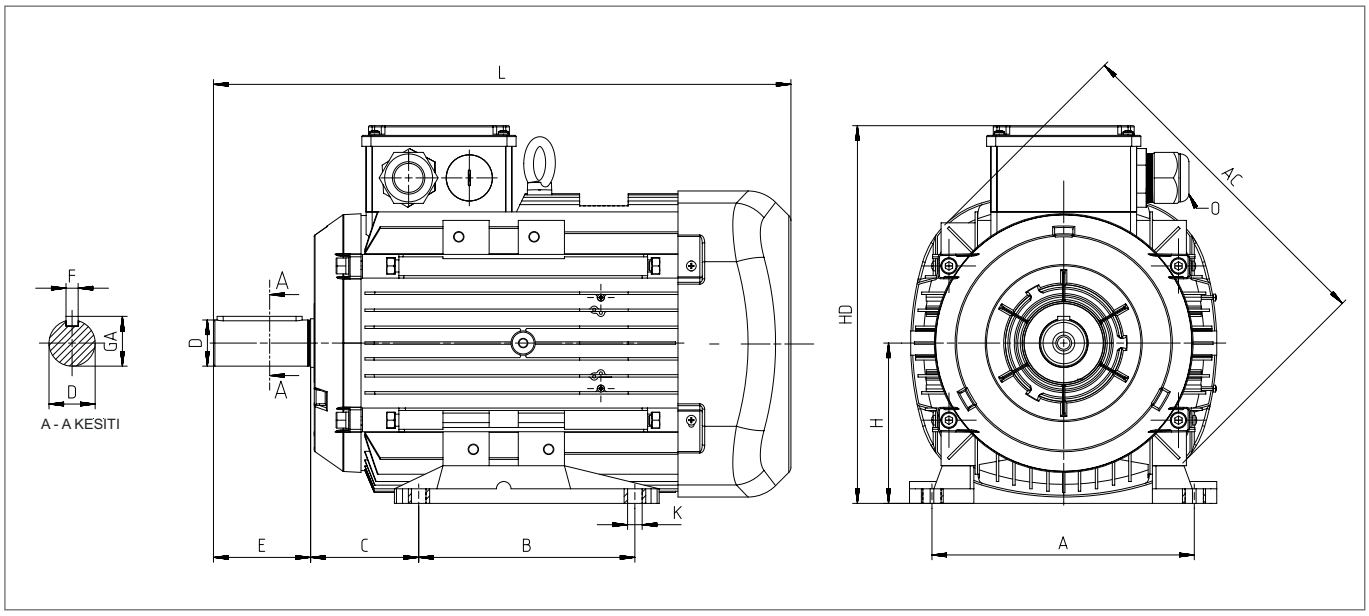

Güç Power (kW)	Kutup Sayısı Number of Poles	Motor Tipi Motor Type	Gövde Tipi Housing Type	Ana Boyutlar Main Dimensions			Ayaklı Motorlar / Foot Mounted Motors						Mil / Shaft				Rulman / Bearing		Keçe / Seal	
				AC	L	O	B	A	H	HD	K	C	D(1)	E	GA	F(2)	Kasnak Tarafı Drive Side	Kasnak Tarafı Aksi Non Drive Side	Kasnak Tarafı Drive Side	Kasnak Tarafı Aksi Non Drive Side
0,25	4	Q2E71M4B	Alüminyum	138	252,5	1*M20	90	112	71	190	7	45	14	30	16	5	6202-2Z	6202-2Z	15*24*5	15*24*5
0,37	2	Q2E71M2C	Alüminyum	138	252,5	1*M20	90	112	71	190	7	45	14	30	16	5	6202-2Z	6202-2Z	15*24*5	15*24*5
	4	Q2E71M4B	Alüminyum	138	252,5	1*M20	90	112	71	190	7	45	14	30	16	5	6202-2Z	6202-2Z	15*24*5	15*24*5
0,55	2	Q2E71M2D	Alüminyum	138	252,5	1*M20	90	112	71	190	7	45	14	30	16	5	6202-2Z	6202-2Z	15*24*5	15*24*5
	4	Q2E80M4B	Alüminyum	158	283,5	1*M20	100	125	80	195	10	50	19	40	21,5	6	6204-2Z	6204-2Z	20*30*7	20*30*7
0,75	2	Q2E71M2DE	Alüminyum	138	252,5	1*M20	90	112	71	190	7	45	14	30	16,0	5	6202-2Z	6202-2Z	15*24*5	15*24*5
	2	Q2E80M2B	Alüminyum	158	283,5	1*M20	100	125	80	195	10	50	19	40	21,5	6	6204-2Z	6204-2Z	20*30*7	20*30*7
	4	Q2E80M4D	Alüminyum	158	283,5	1*M20	100	125	80	195	10	50	19	40	21,5	6	6204-2Z	6204-2Z	20*30*7	20*30*7
	6	Q2E90L6C	Alüminyum	193	316,5	1*M25	100	140	90	222	10	56	24	50	27	8	6305-2Z	6205-2Z	25*40*7	25*40*7
1,1	2	Q2E80M2D	Alüminyum	158	283,5	1*M20	100	125	80	195	10	50	19	40	21,5	6	6204-2Z	6204-2Z	20*30*7	20*30*7
	4	Q2E80M4DE	Alüminyum	158	283,5	1*M20	100	125	80	195	10	50	19	40	21,5	6	6204-2Z	6204-2Z	20*30*7	20*30*7
	4	Q2E90L4C	Alüminyum	193	316,5	1*M25	100	140	90	222	10	56	24	50	27	8	6305-2Z	6205-2Z	25*40*7	25*40*7
	6	Q2E90L6D	Alüminyum	193	344,5	1*M25	125	140	90	222	10	56	24	50	27	8	6305-2Z	6205-2Z	25*40*7	25*40*7
1,5	2	Q2E80M2DE	Alüminyum	158	283,5	1*M20	100	125	80	195	10	50	19	40	21,5	6	6204-2Z	6204-2Z	20*30*7	20*30*7
	2	Q2E90L2C	Alüminyum	193	316,5	1*M25	100	140	90	222	10	56	24	50	27	8	6305-2Z	6205-2Z	25*40*7	25*40*7
	4	Q2E90L4D	Alüminyum	193	316,5	1*M25	125	140	90	222	10	56	24	50	27	8	6305-2Z	6205-2Z	25*40*7	25*40*7
	6	Q2E100L6D	Alüminyum	217	352,0	1*M25	140	160	100	241	12	63	28	60	31	8	6306-2Z	6205-2Z	30*47*7	25*40*7
2,2	2	Q2E90L2D	Alüminyum	193	316,5	1*M25	125	140	90	222	10	56	24	50	27	8	6305-2Z	6205-2Z	25*40*7	25*40*7
	4	Q2E90L4DE	Alüminyum	193	344,5	1*M25	125	140	90	222	10	56	24	50	27	8	6305-2Z	6205-2Z	25*40*7	25*40*7
	4	Q2E100L4C	Alüminyum	217	352,0	1*M25	140	160	100	241	12	63	28	60	31	8	6306-2Z	6205-2Z	30*47*7	25*40*7
	6	Q2E112M6C	Alüminyum	232	395,5	2*M25	140	190	112	261	12	70	28	60	31	8	6306-2Z	6206-2Z	30*47*7	30*47*7
3,0	2	Q2E90L2DE	Alüminyum	193	316,5	1*M25	125	140	90	222	10	56	24	50	27	8	6305-2Z	6205-2Z	25*40*7	25*40*7
	2	Q2E100L2C	Alüminyum	217	352,0	1*M25	140	160	100	241	12	63	28	60	31	8	6306-2Z	6205-2Z	30*47*7	25*40*7
	4	Q2E100L4D	Alüminyum	217	352,0	1*M25	140	160	100	241	12	63	28	60	31	8	6306-2Z	6205-2Z	30*47*7	25*40*7
	6	Q2E132M6A	Alüminyum	279	475,5	2*M32	140	216	132	314	12	89	38	80	41	10	6208-2Z	6208-2Z	40*62*10	40*62*10

BOYUTLAR / DIMENSIONS - B3

				Ana Boyutlar Main Dimensions			Ayaklı Motorlar / Foot Mounted Motors						Mil / Shaft				Rulman / Bearing		Keçe / Seal	
Güç Power (kW)	Kutup Sayısı Number of Poles	Motor Tipi Motor Type	Gövde Tipi Housing Type	AC	L	O	B	A	H	HD	K	C	D(1)	E	GA	F(2)	Kasnak Tarafı Drive Side	Kasnak Tarafı Aksi Non Drive Side	Kasnak Tarafı Drive Side	Kasnak Tarafı Aksi Non Drive Side
4,0	2	Q2E100L2DE	Alüminyum	217	352,0	1*M25	140	160	100	241	12	63	28	60	31	8	6306-2Z	6205-2Z	30*47*7	25*40*7
	2	Q2E112M2C	Alüminyum	232	395,5	2*M25	140	190	112	261	12	70	28	60	31	8	6306-2Z	6206-2Z	30*47*7	30*47*7
	4	Q2E112M4C	Alüminyum	232	395,5	2*M25	140	190	112	261	12	70	28	60	31	8	6306-2Z	6206-2Z	30*47*7	30*47*7
	6	Q2E132M6B	Alüminyum	279	475,5	2*M32	178	216	132	314	12	89	38	80	41	10	6208-2Z	6208-2Z	40*62*10	40*62*10
5,5	2	Q2E112M2CE	Alüminyum	232	395,5	2*M25	140	190	112	261	12	70	28	60	31	8	6306-2Z	6206-2Z	30*47*7	30*47*7
	4	Q2E112M4D	Alüminyum	232	395,5	2*M25	140	190	112	261	12	70	28	60	31	8	6306-2Z	6206-2Z	30*47*7	30*47*7
	2	Q2E132S2C	Alüminyum	279	440,5	2*M32	140	216	132	314	12	89	38	80	41	10	6208-2Z	6208-2Z	40*62*10	40*62*10
	4	Q2E132M4B	Alüminyum	279	475,5	2*M32	140	216	132	314	12	89	38	80	41	10	6208-2Z	6208-2Z	40*62*10	40*62*10
	6	Q2E132M6C	Alüminyum	279	475,5	2*M32	178	216	132	314	12	89	38	80	41	10	6208-2Z	6208-2Z	40*62*10	40*62*10
7,5	2	Q2E132M2A	Alüminyum	279	475,5	2*M32	140	216	132	314	12	89	38	80	41	10	6208-2Z	6208-2Z	40*62*10	40*62*10
	4	Q2E132M4C	Alüminyum	279	475,5	2*M32	178	216	132	314	12	89	38	80	41	10	6208-2Z	6208-2Z	40*62*10	40*62*10
	6	Q2E160M6B	Alüminyum	302	576,0	2*M32	210	254	160	360	15	108	42	110	45	12	6309-2Z	6209-2Z	45*72*10	45*72*10
11,0	2	Q2E132M2AE	Alüminyum	279	475,5	2*M32	140	216	132	314	12	89	38	80	41	10	6208-2Z	6208-2Z	40*62*10	40*62*10
	2	Q2E160M2B	Alüminyum	302	576,0	2*M32	210	254	160	360	15	108	42	110	45	12	6309-2Z	6209-2Z	45*72*10	45*72*10
	4	Q2E160M4B	Alüminyum	302	576,0	2*M32	210	254	160	360	15	108	42	110	45	12	6309-2Z	6209-2Z	45*72*10	45*72*10
	6	Q2E160L6B	Alüminyum	302	576,0	2*M32	254	254	160	360	15	108	42	110	45	12	6309-2Z	6209-2Z	45*72*10	45*72*10
15,0	2	Q2E160L2A	Alüminyum	302	576,0	2*M32	210	254	160	360	15	108	42	110	45	12	6309-2Z	6209-2Z	45*72*10	45*72*10
	4	Q2E160L4A	Alüminyum	302	576,0	2*M32	254	254	160	360	15	108	42	110	45	12	6309-2Z	6209-2Z	45*72*10	45*72*10
	6	Q2E180L6A	Alüminyum	370	629,0	2*M40	279	279	180	428	15	121	48	110	51,5	14	6310-2Z	6310-2Z	50*80*10	50*80*10
18,5	2	Q2E160L2C	Alüminyum	302	576,0	2*M32	254	254	160	360	15	108	42	110	45	12	6309-2Z	6209-2Z	45*72*10	45*72*10
	4	Q2E180M4B	Alüminyum	370	629,0	2*M40	241	279	180	428	15	121	48	110	51,5	14	6310-2Z	6310-2Z	50*80*10	50*80*10
	6	Q2E200L6B	Alüminyum	415	665,0	2*M50	305	318	200	461	19	133	55	110	59	16	6312-2Z	6312-2Z	60*90*10	60*90*10
22,0	2	Q2E160L2D	Alüminyum	302	576,0	2*M32	210	254	160	360	15	108	42	110	45	12	6309-2Z	6209-2Z	45*72*10	45*72*10
	2	Q2E180M2A	Alüminyum	370	629,0	2*M40	241	279	180	428	15	121	48	110	51,5	14	6310-2Z	6310-2Z	50*80*10	50*80*10
	4	Q2E180L4B	Alüminyum	370	629,0	2*M40	279	279	180	428	15	121	48	110	51,5	14	6310-2Z	6310-2Z	50*80*10	50*80*10
	6	Q2E200L6C	Alüminyum	415	665,0	2*M50	305	318	200	461	19	133	55	110	59	16	6312-2Z	6312-2Z	60*90*10	60*90*10
30,0	2	Q2E200L2B	Alüminyum	415	665,0	2*M50	305	318	200	461	19	133	55	110	59	16	6312-2Z	6312-2Z	60*90*10	60*90*10
	4	Q2E200L4D	Alüminyum	415	665,0	2*M50	305	318	200	461	19	133	55	110	59	16	6312-2Z	6312-2Z	60*90*10	60*90*10
	6	Q2E225M6B	Alüminyum	456	765,0	2*M50	311	356	225	504	19	149	60	140	64	18	6313-2Z	6313-2Z	65*100*13	65*100*13
37,0	2	Q2E200L2C	Alüminyum	415	665,0	2*M50	305	318	200	461	19	133	55	110	59	16	6312-2Z	6312-2Z	60*90*10	60*90*10
	4	Q2E225M4C	Alüminyum	456	765,0	2*M50	286	356	225	504	19	149	60	140	64	18	6313-2Z	6313-2Z	65*100*13	65*100*13
45,0	2	Q2E225M2B	Alüminyum	456	735,0	2*M50	311	356	225	504	19	149	55	110	59	16	6313-2Z	6313-2Z	65*100*13	65*100*13
	4	Q2E225M4D	Alüminyum	456	765,0	2*M50	311	356	225	504	19	149	60	140	64	18	6313-2Z	6313-2Z	65*100*13	65*100*13
55,0	2	Q2EP250M2B	Pik	527	886,0	2*M50	349	406	250	615	24	168	60	140	64	18	6316	6316	80*100*10	80*100*10
	4	Q2EP250M4D	Pik	527	886,0	2*M50	349	406	250	615	24	168	65	140	69	18	6316	6316	80*100*10	80*100*10
75,0	2	Q2EP250M2C	Pik	527	886,0	2*M50	349	406	250	615	24	168	60	140	64	18	6316	6316	80*100*10	80*100*10
	2	Q2EP280M2B	Pik	527	1025,0	2*M50	419	457	280	647	24	190	65	140	69	18	6316	6316	80*100*10	80*100*10
	4	Q2EP250M4E	Pik	527	886,0	2*M50	349	406	250	615	24	168	65	140	69	18	6316	6316	80*100*10	80*100*10
	4	Q2EP280M4B	Pik	527	1025,0	2*M50	419	457	280	647	24	190	75	140	80	20	6316	6316	80*100*10	80*100*10
90,0	2	Q2EP280M2C	Pik	527	1025,0	2*M50	419	457	280	647	24	190	65	140	69	18	6316	6316	80*100*10	80*100*10
	4	Q2EP280M4C	Pik	527	1025,0	2*M50	419	457	280	647	24	190	75	140	80	20	6316	6316	80*100*10	80*100*10
110,0	2	Q2EP280M2D	Pik	527	1025,0	2*M50	419	457	280	647	24	190	65	140	69	18	6316	6316	80*100*10	80*100*10
	4	Q2EP280M4D	Pik	527	1025,0	2*M50	419	457	280	647	24	190	75	140	80	20	6316	6316	80*100*10	80*100*10

BOYUTLAR / DIMENSIONS - B3

				Ana Boyutlar Main Dimensions			Ayaklı Motorlar / Foot Mounted Motors						Mil / Shaft				Rulman / Bearing		Keçe / Seal	
Güç Power (kW)	Kutup Sayısı Number of Poles	Motor Tipi Motor Type	Gövde Tipi Housing Type	AC	L	O	B	A	H	HD	K	C	D(1)	E	GA	F(2)	Kasnak Tarafı Drive Side	Kasnak Tarafı Aksi Non Drive Side	Kasnak Tarafı Drive Side	Kasnak Tarafı Aksi Non Drive Side
110,0	2	Q2EP315S2C	Pik	630	1180,0	2*M63	406	508	315	845	28	216	65	140	69	18	6317	6317	85*105*5.5	85*105*5.5
	4	Q2EP315S4C	Pik	630	1210,0	2*M63	406	508	315	845	28	216	80	170	85	22	6319	6319	95*115*5.5	95*115*5.5
132,0	2	Q2EP315M2C	Pik	630	1290,0	2*M63	457	508	315	845	28	216	65	140	69	18	6317	6317	85*105*5.5	85*105*5.5
	4	Q2EP315M4C	Pik	630	1320,0	2*M63	457	508	315	845	28	216	80	170	85	22	6319	6319	95*115*5.5	95*115*5.5
160,0	2	Q2EP315L2C	Pik	630	1290,0	2*M63	508	508	315	845	28	216	65	140	69	18	6317	6317	85*105*5.5	85*105*5.5
	4	Q2EP315L4C	Pik	630	1320,0	2*M63	508	508	315	845	28	216	80	170	85	22	6319	6319	95*115*5.5	95*115*5.5
200,0	2	Q2EP315L2D	Pik	630	1290,0	2*M63	508	508	315	845	28	216	65	140	69	18	6317	6317	85*105*5.5	85*105*5.5
	4	Q2EP315L4D	Pik	630	1320,0	2*M63	508	508	315	845	28	216	80	170	85	22	6319	6319	95*115*5.5	95*115*5.5
250,0	2	Q2EP355M2C	Pik	710	1486,0	4*M63	560	610	355	956	28	254	75	140	80	20	6317	6317	85*105*5.5	85*105*5.5
	4	Q2EP355M4C	Pik	710	1517,0	4*M63	560	610	355	956	28	254	95	170	100	25	6322	6322	110*130*5.5	110*130*5.5
315,0	2	Q2EP355L2C	Pik	710	1486,0	4*M63	630	610	355	956	28	254	75	140	80	20	6317	6317	85*105*5.5	85*105*5.5
	4	Q2EP355L4C	Pik	710	1517,0	4*M63	630	610	355	956	28	254	95	170	100	25	6322	6322	110*130*5.5	110*130*5.5
355,0	2	Q2EP355L2D	Pik	710	1486,0	4*M63	630	610	355	956	28	254	75	140	80	20	6317	6317	85*105*5.5	85*105*5.5
	4	Q2EP355L4D	Pik	710	1517,0	4*M63	630	610	355	956	28	254	95	170	100	25	6322	6322	110*130*5.5	110*130*5.5

(1) Toleranslar 28 mm'ye kadar DIN EN 50347 "j6", 28 mm ve üzeri "k6"
(2) DIN 6885'e göre

(1) Tolerance DIN EN 50347 "j6" up to 28 mm "k6" above 28 mm
(2) According to DIN 6885

BOYUTLAR / DIMENSIONS - B5, B35

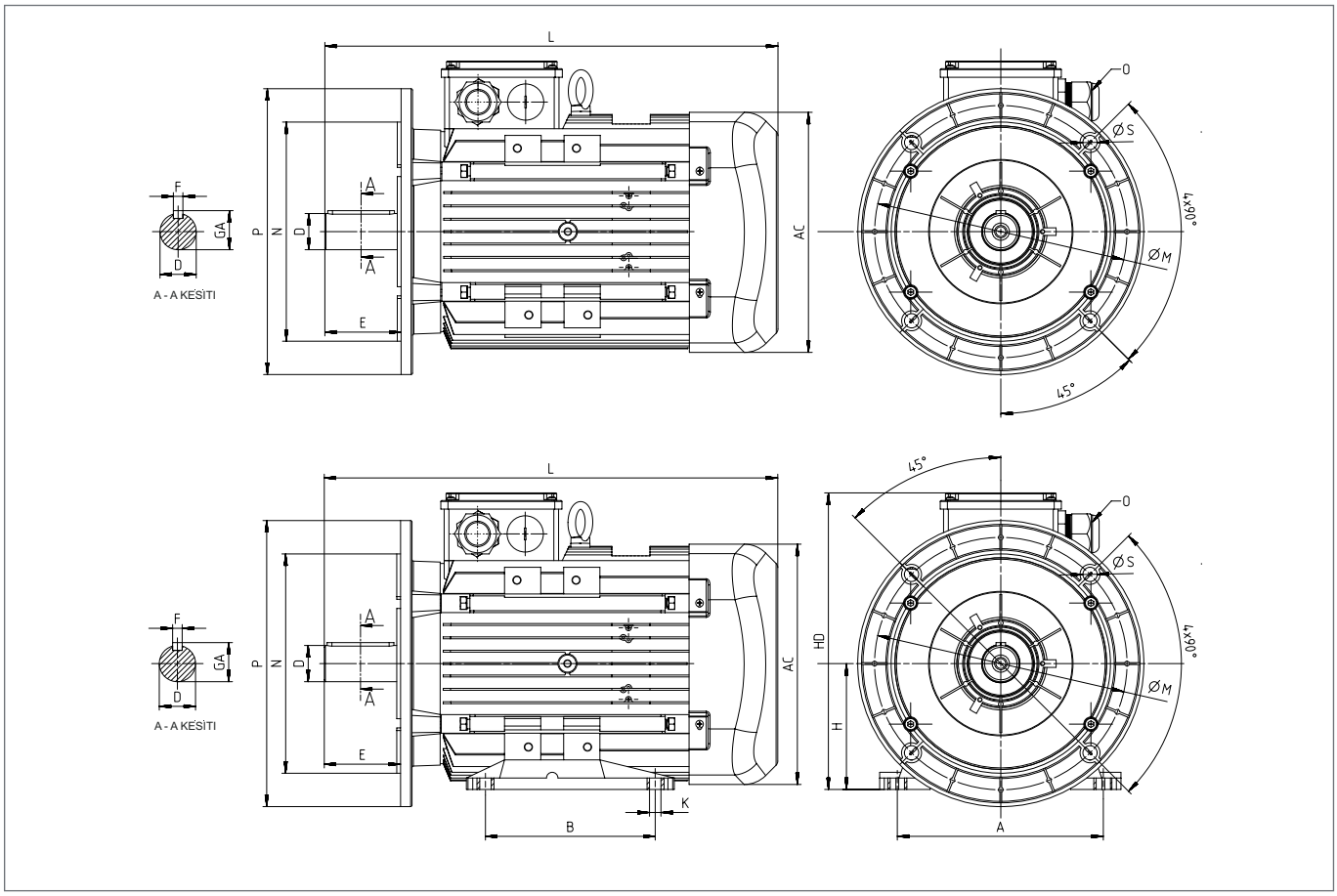

Güç Power (kW)	Kutup Sayısı Number of Poles	Motor Tipi Motor Type	Gövde Tipi Housing Type	Ana Boyutlar Main Dimesions			Ayaklı Motorlar Foot Mounted Motors					Mil / Shaft				Rulman / Bearing		Keçe / Seal		Flanş / Flange (FA) (B5)				
				AC	L	O	B	A	H	HD	K	D (1)	E	GA	F (2)	Kasnak Tarafı Drive Side	Kasnak Tarafı Aksi Non Drive Side	Kasnak Tarafı Drive Side	Kasnak Tarafı Aksi Non Drive Side	P	N (3)	M	R	S
0,25	4	Q2E71M4B	Alüminyum	138	252,5	1*M20	90	112	71	190	7	14	30	16	5	6202-2Z	6202-2Z	15*24*5	15*24*5	160	110	130	0	10
0,37	2	Q2E71M2C	Alüminyum	138	252,5	1*M20	90	112	71	190	7	14	30	16	5	6202-2Z	6202-2Z	15*24*5	15*24*5	160	110	130	0	10
	4	Q2E71M4B	Alüminyum	138	252,5	1*M20	90	112	71	190	7	14	30	16	5	6202-2Z	6202-2Z	15*24*5	15*24*5	160	110	130	0	10
0,55	2	Q2E71M2D	Alüminyum	138	252,5	1*M20	90	112	71	190	7	14	30	16	5	6202-2Z	6202-2Z	15*24*5	15*24*5	160	110	130	0	10
	4	Q2E80M4B	Alüminyum	158	283,5	1*M20	100	125	80	195	10	19	40	21,5	6	6204-2Z	6204-2Z	20*30*7	20*30*7	200	130	165	0	12
0,75	2	Q2E71M2DE	Alüminyum	138	252,5	1*M20	90	112	71	190	7	14	30	16,0	5	6202-2Z	6202-2Z	15*24*5	15*24*5	160	110	130	0	10
	2	Q2E80M2B	Alüminyum	158	283,5	1*M20	100	125	80	195	10	19	40	21,5	6	6204-2Z	6204-2Z	20*30*7	20*30*7	200	130	165	0	12
	4	Q2E80M4D	Alüminyum	158	283,5	1*M20	100	125	80	195	10	19	40	21,5	6	6204-2Z	6204-2Z	20*30*7	20*30*7	200	130	165	0	12
	6	Q2E90L6C	Alüminyum	193	316,5	1*M25	100	140	90	222	10	24	50	27	8	6305-2Z	6205-2Z	25*40*7	25*40*7	200	130	165	0	12
1,1	2	Q2E80M2D	Alüminyum	158	283,5	1*M20	100	125	80	195	10	19	40	21,5	6	6204-2Z	6204-2Z	20*30*7	20*30*7	200	130	165	0	12
	4	Q2E80M4DE	Alüminyum	158	283,5	1*M20	100	125	80	195	10	19	40	21,5	6	6204-2Z	6204-2Z	20*30*7	20*30*7	200	130	165	0	12
	4	Q2E90L4C	Alüminyum	193	316,5	1*M25	100	140	90	222	10	24	50	27	8	6305-2Z	6205-2Z	25*40*7	25*40*7	200	130	165	0	12
	6	Q2E90L6D	Alüminyum	193	344,5	1*M25	125	140	90	222	10	24	50	27	8	6305-2Z	6205-2Z	25*40*7	25*40*7	200	130	165	0	12
1,5	2	Q2E80M2DE	Alüminyum	158	283,5	1*M20	100	125	80	195	10	19	40	21,5	6	6204-2Z	6204-2Z	20*30*7	20*30*7	200	130	165	0	12
	2	Q2E90L2C	Alüminyum	193	316,5	1*M25	100	140	90	222	10	24	50	27	8	6305-2Z	6205-2Z	25*40*7	25*40*7	200	130	165	0	12
	4	Q2E90L4D	Alüminyum	193	316,5	1*M25	125	140	90	222	10	24	50	27	8	6305-2Z	6205-2Z	25*40*7	25*40*7	200	130	165	0	12
	6	Q2E100L6D	Alüminyum	217	352,0	1*M25	140	160	100	241	12	28	60	31	8	6306-2Z	6205-2Z	30*47*7	25*40*7	250	180	215	0	15
2,2	2	Q2E90L2D	Alüminyum	193	316,5	1*M25	125	140	90	222	10	24	50	27	8	6305-2Z	6205-2Z	25*40*7	25*40*7	200	130	165	0	12
	4	Q2E90L4DE	Alüminyum	193	344,5	1*M25	125	140	90	222	10	24	50	27	8	6305-2Z	6205-2Z	25*40*7	25*40*7	200	130	165	0	12
	4	Q2E100L4C	Alüminyum	217	352,0	1*M25	140	160	100	241	12	28	60	31	8	6306-2Z	6205-2Z	30*47*7	25*40*7	250	180	215	0	15
	6	Q2E112M6C	Alüminyum	232	395,5	2*M25	140	190	112	261	12	28	60	31	8	6306-2Z	6206-2Z	30*47*7	30*47*7	250	180	215	0	15
3,0	2	Q2E90L2DE	Alüminyum	193	316,5	1*M25	125	140	90	222	10	24	50	27	8	6305-2Z	6205-2Z	25*40*7	25*40*7	200	130	165	0	12
	2	Q2E100L2C	Alüminyum	217	352,0	1*M25	140	160	100	241	12	28	60	31	8	6306-2Z	6205-2Z	30*47*7	25*40*7	250	180	215	0	15
	4	Q2E100L4D	Alüminyum	217	352,0	1*M25	140	160	100	241	12	28	60	31	8	6306-2Z	6205-2Z	30*47*7	25*40*7	250	180	215	0	15
	6	Q2E132M6A	Alüminyum	279	475,5	2*M32	140	216	132	314	12	38	80	41	10	6208-2Z	6208-2Z	40*62*10	40*62*10	300	230	265	0	15

BOYUTLAR / DIMENSIONS - B5, B35

				Ana Boyutlar Main Dimesions			Ayaklı Motorlar Foot Mounted Motors					Mil / Shaft				Rulman / Bearing		Keçe / Seal		Flanş / Flange (FA) (B5)				
Güç Power (kW)	Kutup Sayısı Number of Poles	Motor Tipi Motor Type	Gövde Tipi Housing Type	AC	L	O	B	A	H	HD	K	D (1)	E	GA	F (2)	Kasnak Tarafı Drive Side	Kasnak Tarafı Aksi Non Drive Side	Kasnak Tarafı Drive Side	Kasnak Tarafı Aksi Non Drive Side	P	N (3)	M	R	S
4,0	2	Q2E100L2DE	Alüminyum	217	352,0	1*M25	140	160	100	241	12	28	60	31	8	6306-2Z	6205-2Z	30*47*7	25*40*7	250	180	215	0	15
	2	Q2E112M2C	Alüminyum	232	395,5	2*M25	140	190	112	261	12	28	60	31	8	6306-2Z	6206-2Z	30*47*7	30*47*7	250	180	215	0	15
	4	Q2E112M4C	Alüminyum	232	395,5	2*M25	140	190	112	261	12	28	60	31	8	6306-2Z	6206-2Z	30*47*7	30*47*7	250	180	215	0	15
	6	Q2E132M6B	Alüminyum	279	475,5	2*M32	178	216	132	314	12	38	80	41	10	6208-2Z	6208-2Z	40*62*10	40*62*10	300	230	265	0	15
5,5	2	Q2E112M2CE	Alüminyum	232	395,5	2*M25	140	190	112	261	12	28	60	31	8	6306-2Z	6206-2Z	30*47*7	30*47*7	250	180	215	0	15
	4	Q2E112M4D	Alüminyum	232	395,5	2*M25	140	190	112	261	12	28	60	31	8	6306-2Z	6206-2Z	30*47*7	30*47*7	250	180	215	0	15
	2	Q2E132S2C	Alüminyum	279	440,5	2*M32	140	216	132	314	12	38	80	41	10	6208-2Z	6208-2Z	40*62*10	40*62*10	300	230	265	0	15
	4	Q2E132M4B	Alüminyum	279	475,5	2*M32	140	216	132	314	12	38	80	41	10	6208-2Z	6208-2Z	40*62*10	40*62*10	300	230	265	0	15
	6	Q2E132M6C	Alüminyum	279	475,5	2*M32	178	216	132	314	12	38	80	41	10	6208-2Z	6208-2Z	40*62*10	40*62*10	300	230	265	0	15
7,5	2	Q2E132M2A	Alüminyum	279	475,5	2*M32	140	216	132	314	12	38	80	41	10	6208-2Z	6208-2Z	40*62*10	40*62*10	300	230	265	0	15
	4	Q2E132M4C	Alüminyum	279	475,5	2*M32	178	216	132	314	12	38	80	41	10	6208-2Z	6208-2Z	40*62*10	40*62*10	300	230	265	0	15
	6	Q2E160M6B	Alüminyum	302	576,0	2*M32	210	254	160	360	15	42	110	45	12	6309-2Z	6209-2Z	45*72*10	45*72*10	350	250	300	0	19
11,0	2	Q2E132M2AE	Alüminyum	279	475,5	2*M32	140	216	132	314	12	38	80	41	10	6208-2Z	6208-2Z	40*62*10	40*62*10	300	230	265	0	15
	2	Q2E160M2B	Alüminyum	302	576,0	2*M32	210	254	160	360	15	42	110	45	12	6309-2Z	6209-2Z	45*72*10	45*72*10	350	250	300	0	19
	4	Q2E160M4B	Alüminyum	302	576,0	2*M32	210	254	160	360	15	42	110	45	12	6309-2Z	6209-2Z	45*72*10	45*72*10	350	250	300	0	19
	6	Q2E160L6B	Alüminyum	302	576,0	2*M32	254	254	160	360	15	42	110	45	12	6309-2Z	6209-2Z	45*72*10	45*72*10	350	250	300	0	19
15,0	2	Q2E160L2A	Alüminyum	302	576,0	2*M32	210	254	160	360	15	42	110	45	12	6309-2Z	6209-2Z	45*72*10	45*72*10	350	250	300	0	19
	4	Q2E160L4A	Alüminyum	302	576,0	2*M32	254	254	160	360	15	42	110	45	12	6309-2Z	6209-2Z	45*72*10	45*72*10	350	250	300	0	19
	6	Q2E180L6A	Alüminyum	370	629,0	2*M40	279	279	180	428	15	48	110	51,5	14	6310-2Z	6310-2Z	50*80*10	50*80*10	350	250	300	0	19
18,5	2	Q2E160L2C	Alüminyum	302	576,0	2*M32	254	254	160	360	15	42	110	45	12	6309-2Z	6209-2Z	45*72*10	45*72*10	350	250	300	0	19
	4	Q2E180M4B	Alüminyum	370	629,0	2*M40	241	279	180	428	15	48	110	51,5	14	6310-2Z	6310-2Z	50*80*10	50*80*10	350	250	300	0	19
	6	Q2E200L6B	Alüminyum	415	665,0	2*M50	305	318	200	461	19	55	110	59	16	6312-2Z	6312-2Z	60*90*10	60*90*10	400	300	350	0	19
22,0	2	Q2E160L2D	Alüminyum	302	576,0	2*M32	210	254	160	360	15	42	110	45	12	6309-2Z	6209-2Z	45*72*10	45*72*10	350	250	300	0	19
	2	Q2E180M2A	Alüminyum	370	629,0	2*M40	241	279	180	428	15	48	110	51,5	14	6310-2Z	6310-2Z	50*80*10	50*80*10	350	250	300	0	19
	4	Q2E180L4B	Alüminyum	370	629,0	2*M40	279	279	180	428	15	48	110	51,5	14	6310-2Z	6310-2Z	50*80*10	50*80*10	350	250	300	0	19
	6	Q2E200L6C	Alüminyum	415	665,0	2*M50	305	318	200	461	19	55	110	59	16	6312-2Z	6312-2Z	60*90*10	60*90*10	400	300	350	0	19
30,0	2	Q2E200L2B	Alüminyum	415	665,0	2*M50	305	318	200	461	19	55	110	59	16	6312-2Z	6312-2Z	60*90*10	60*90*10	400	300	350	0	19
	4	Q2E200L4D	Alüminyum	415	665,0	2*M50	305	318	200	461	19	55	110	59	16	6312-2Z	6312-2Z	60*90*10	60*90*10	400	300	350	0	19
	6	Q2E225M6B	Alüminyum	456	765,0	2*M50	311	356	225	504	19	60	140	64	18	6313-2Z	6313-2Z	65*100*13	65*100*13	450	350	400	0	19
37,0	2	Q2E200L2C	Alüminyum	415	665,0	2*M50	305	318	200	461	19	55	110	59	16	6312-2Z	6312-2Z	60*90*10	60*90*10	400	300	350	0	19
	4	Q2E225M4C	Alüminyum	456	765,0	2*M50	286	356	225	504	19	60	140	64	18	6313-2Z	6313-2Z	65*100*13	65*100*13	450	350	400	0	19
45,0	2	Q2E225M2B	Alüminyum	456	735,0	2*M50	311	356	225	504	19	55	110	59	16	6313-2Z	6313-2Z	65*100*13	65*100*13	450	350	400	0	19
	4	Q2E225M4D	Alüminyum	456	765,0	2*M50	311	356	225	504	19	60	140	64	18	6313-2Z	6313-2Z	65*100*13	65*100*13	450	350	400	0	19
55,0	2	Q2EP250M2B	Pik	527	886,0	2*M50	349	406	250	615	24	60	140	64	18	6316	6316	80*100*10	80*100*10	550	450	500	0	19
	4	Q2EP250M4D	Pik	527	886,0	2*M50	349	406	250	615	24	65	140	69	18	6316	6316	80*100*10	80*100*10	550	450	500	0	19
75,0	2	Q2EP250M2C	Pik	527	886,0	2*M50	349	406	250	615	24	60	140	64	18	6316	6316	80*100*10	80*100*10	550	450	500	0	19
	2	Q2EP280M2B	Pik	527	1025,0	2*M50	419	457	280	647	24	65	140	69	18	6316	6316	80*100*10	80*100*10	550	450	500	0	19
	4	Q2EP250M4E	Pik	527	886,0	2*M50	349	406	250	615	24	65	140	69	18	6316	6316	80*100*10	80*100*10	550	450	500	0	19
	4	Q2EP280M4B	Pik	527	1025,0	2*M50	419	457	280	647	24	75	140	80	20	6316	6316	80*100*10	80*100*10	550	450	500	0	19
90,0	2	Q2EP280M2C	Pik	527	1025,0	2*M50	419	457	280	647	24	65	140	69	18	6316	6316	80*100*10	80*100*10	550	450	500	0	19
	4	Q2EP280M4C	Pik	527	1025,0	2*M50	419	457	280	647	24	75	140	80	20	6316	6316	80*100*10	80*100*10	550	450	500	0	19
110,0	2	Q2EP280M2D	Pik	527	1025,0	2*M50	419	457	280	647	24	65	140	69	18	6316	6316	80*100*10	80*100*10	550	450	500	0	19
	4	Q2EP280M4D	Pik	527	1025,0	2*M50	419	457	280	647	24	75	140	80	20	6316	6316	80*100*10	80*100*10	550	450	500	0	19

BOYUTLAR / DIMENSIONS - B5, B35

				Ana Boyutlar Main Dimensions			Ayaklı Motorlar / Foot Mounted Motors						Mil / Shaft				Rulman / Bearing		Keçe / Seal		Flanş / Flange (FA) (B5)				
Güç Power (kW)	Kutup Sayısı Number of Poles	Motor Tipi Motor Type	Gövde Tipi Housing Type	AC	L	O	B	A	H	HD	K	C	D(1)	E	GA	F(2)	Kasnak Tarafı Drive Side	Kasnak Tarafı Aksi Non Drive Side	Kasnak Tarafı Drive Side	Kasnak Tarafı Aksi Non Drive Side	P	N(3)	M	R	S
110,0	2	Q2EP315S2C	Pik	630	1180,0	2*M63	406	508	315	845	28	216	65	140	69	18	6317	6317	85*105*5.5	85*105*5.5	660	550	600	0	24
	4	Q2EP315S4C	Pik	630	1210,0	2*M63	406	508	315	845	28	216	80	170	85	22	6319	6319	95*115*5.5	95*115*5.5	660	550	600	0	24
132,0	2	Q2EP315M2C	Pik	630	1290,0	2*M63	457	508	315	845	28	216	65	140	69	18	6317	6317	85*105*5.5	85*105*5.5	660	550	600	0	24
	4	Q2EP315M4C	Pik	630	1320,0	2*M63	457	508	315	845	28	216	80	170	85	22	6319	6319	95*115*5.5	95*115*5.5	660	550	600	0	24
160,0	2	Q2EP315L2C	Pik	630	1290,0	2*M63	508	508	315	845	28	216	65	140	69	18	6317	6317	85*105*5.5	85*105*5.5	660	550	600	0	24
	4	Q2EP315L4C	Pik	630	1320,0	2*M63	508	508	315	845	28	216	80	170	85	22	6319	6319	95*115*5.5	95*115*5.5	660	550	600	0	24
200,0	2	Q2EP315L2D	Pik	630	1290,0	2*M63	508	508	315	845	28	216	65	140	69	18	6317	6317	85*105*5.5	85*105*5.5	660	550	600	0	24
	4	Q2EP315L4D	Pik	630	1320,0	2*M63	508	508	315	845	28	216	80	170	85	22	6319	6319	95*115*5.5	95*115*5.5	660	550	600	0	24
250,0	2	Q2EP355M2C	Pik	710	1486,0	4*M63	560	610	355	956	28	254	75	140	80	20	6317	6317	85*105*5.5	85*105*5.5	800	680	740	0	24
	4	Q2EP355M4C	Pik	710	1517,0	4*M63	560	610	355	956	28	254	95	170	100	25	6322	6322	110*130*5.5	110*130*5.5	800	680	740	0	24
315,0	2	Q2EP355L2C	Pik	710	1486,0	4*M63	630	610	355	956	28	254	75	140	80	20	6317	6317	85*105*5.5	85*105*5.5	800	680	740	0	24
	4	Q2EP355L4C	Pik	710	1517,0	4*M63	630	610	355	956	28	254	95	170	100	25	6322	6322	110*130*5.5	110*130*5.5	800	680	740	0	24
355,0	2	Q2EP355L2D	Pik	710	1486,0	4*M63	630	610	355	956	28	254	75	140	80	20	6317	6317	85*105*5.5	85*105*5.5	800	680	740	0	24
	4	Q2EP355L4D	Pik	710	1517,0	4*M63	630	610	355	956	28	254	95	170	100	25	6322	6322	110*130*5.5	110*130*5.5	800	680	740	0	24

(1) Toleranslar 28 mm'ye kadar DIN EN 50347 "j6", 28 mm ve üzeri "k6"
(2) DIN 6885'e göre
(3) Tolerans DIN EN 50347 "j6"

(1) Tolerance DIN EN 50347 "j6" up to 28 mm "k6" above 28 mm
(2) According to DIN 6885
(3) Tolerance DIN EN 50347 "j6"

BOYUTLAR / DIMENSIONS - B14a, B34a

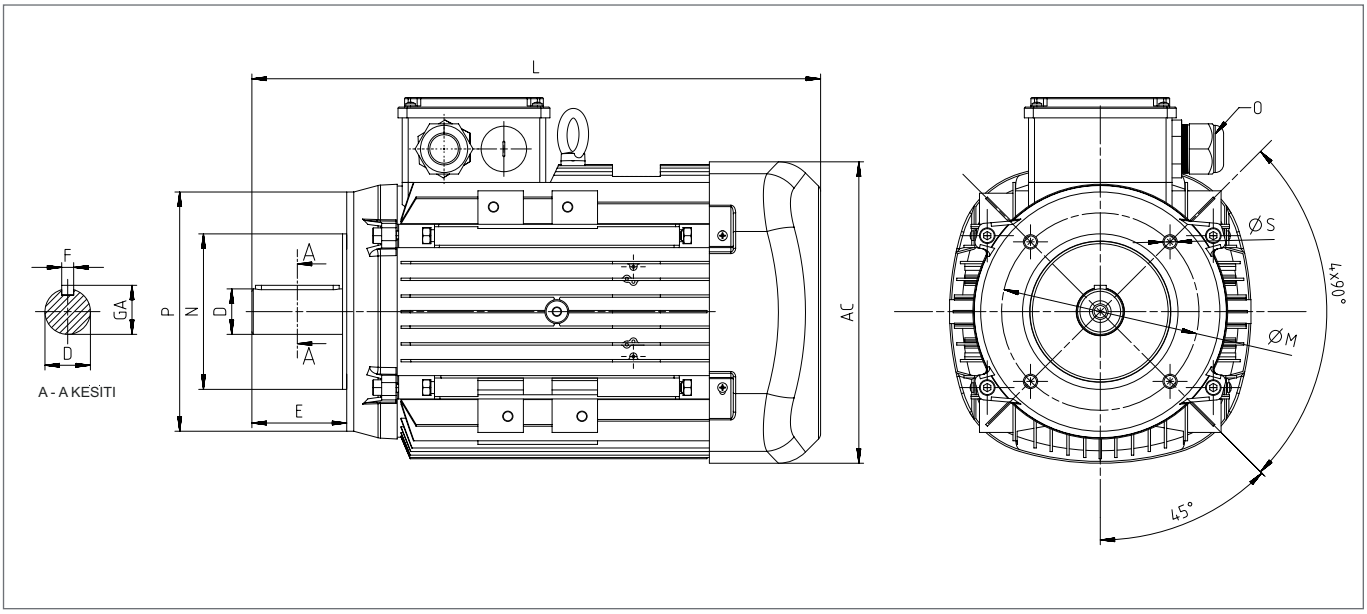

				Ana Boyutlar Main Dimensions			Ayaklı Motorlar Foot Mounted Motors					Mil / Shaft				Rulman / Bearing		Keçe / Seal		Flanş / Flange (FC) (B14a)				
Güç Power (kW)	Kutup Sayısı Number of Poles	Motor Tipi Motor Type	Gövde Tipi Housing Type	AC	L	O	B	A	H	HD	K	D (1)	E	GA	F (2)	Kasnak Tarafı Drive Side	Kasnak Tarafı Aksi Non Drive Side	Kasnak Tarafı Drive Side	Kasnak Tarafı Aksi Non Drive Side	P	N (3)	M	R	S
0,25	4	Q2E71M4B	Alüminyum	138	252,5	1*M20	90	112	71	190	7	14	30	16	5	6202-2Z	6202-2Z	15*24*5	15*24*5	105	70	85	0	M6
0,37	2	Q2E71M2C	Alüminyum	138	252,5	1*M20	90	112	71	190	7	14	30	16	5	6202-2Z	6202-2Z	15*24*5	15*24*5	105	70	85	0	M6
	4	Q2E71M4B	Alüminyum	138	252,5	1*M20	90	112	71	190	7	14	30	16	5	6202-2Z	6202-2Z	15*24*5	15*24*5	105	70	85	0	M6
0,55	2	Q2E71M2D	Alüminyum	138	252,5	1*M20	90	112	71	190	7	14	30	16	5	6202-2Z	6202-2Z	15*24*5	15*24*5	105	70	85	0	M6
	4	Q2E80M4B	Alüminyum	158	283,5	1*M20	100	125	80	195	10	19	40	21,5	6	6204-2Z	6204-2Z	20*30*7	20*30*7	120	80	100	0	M6
0,75	2	Q2E71M2DE	Alüminyum	138	252,5	1*M20	90	112	71	190	7	14	30	16,0	5	6202-2Z	6202-2Z	15*24*5	15*24*5	105	70	85	0	M6
	2	Q2E80M2B	Alüminyum	158	283,5	1*M20	100	125	80	195	10	19	40	21,5	6	6204-2Z	6204-2Z	20*30*7	20*30*7	120	80	100	0	M6
	4	Q2E80M4D	Alüminyum	158	283,5	1*M20	100	125	80	195	10	19	40	21,5	6	6204-2Z	6204-2Z	20*30*7	20*30*7	120	80	100	0	M6
	6	Q2E90L6C	Alüminyum	193	316,5	1*M25	100	140	90	222	10	24	50	27	8	6305-2Z	6205-2Z	25*40*7	25*40*7	140	95	115	0	M8
1,1	2	Q2E80M2D	Alüminyum	158	283,5	1*M20	100	125	80	195	10	19	40	21,5	6	6204-2Z	6204-2Z	20*30*7	20*30*7	120	80	100	0	M6
	4	Q2E80M4DE	Alüminyum	158	283,5	1*M20	100	125	80	195	10	19	40	21,5	6	6204-2Z	6204-2Z	20*30*7	20*30*7	120	80	100	0	M6
	4	Q2E90L4C	Alüminyum	193	316,5	1*M25	100	140	90	222	10	24	50	27	8	6305-2Z	6205-2Z	25*40*7	25*40*7	140	95	115	0	M8
	6	Q2E90L6D	Alüminyum	193	344,5	1*M25	125	140	90	222	10	24	50	27	8	6305-2Z	6205-2Z	25*40*7	25*40*7	140	95	115	0	M8
1,5	2	Q2E80M2DE	Alüminyum	158	283,5	1*M20	100	125	80	195	10	19	40	21,5	6	6204-2Z	6204-2Z	20*30*7	20*30*7	120	80	100	0	M6
	2	Q2E90L2C	Alüminyum	193	316,5	1*M25	100	140	90	222	10	24	50	27	8	6305-2Z	6205-2Z	25*40*7	25*40*7	140	95	115	0	M8
	4	Q2E90L4D	Alüminyum	193	316,5	1*M25	125	140	90	222	10	24	50	27	8	6305-2Z	6205-2Z	25*40*7	25*40*7	140	95	115	0	M8
	6	Q2E100L6D	Alüminyum	217	352,0	1*M25	140	160	100	241	12	28	60	31	8	6306-2Z	6205-2Z	30*47*7	25*40*7	160	110	130	0	M8
2,2	2	Q2E90L2D	Alüminyum	193	316,5	1*M25	125	140	90	222	10	24	50	27	8	6305-2Z	6205-2Z	25*40*7	25*40*7	140	95	115	0	M8
	4	Q2E90L4DE	Alüminyum	193	344,5	1*M25	125	140	90	222	10	24	50	27	8	6305-2Z	6205-2Z	25*40*7	25*40*7	140	95	115	0	M8
	4	Q2E100L4C	Alüminyum	217	352,0	1*M25	140	160	100	241	12	28	60	31	8	6306-2Z	6205-2Z	30*47*7	25*40*7	160	110	130	0	M8
	6	Q2E112M6C	Alüminyum	232	395,5	2*M25	140	190	112	261	12	28	60	31	8	6306-2Z	6206-2Z	30*47*7	30*47*7	160	110	130	0	M8
3,0	2	Q2E90L2DE	Alüminyum	193	316,5	1*M25	125	140	90	222	10	24	50	27	8	6305-2Z	6205-2Z	25*40*7	25*40*7	140	95	115	0	M8
	2	Q2E100L2C	Alüminyum	217	352,0	1*M25	140	160	100	241	12	28	60	31	8	6306-2Z	6205-2Z	30*47*7	25*40*7	160	110	130	0	M8
	4	Q2E100L4D	Alüminyum	217	352,0	1*M25	140	160	100	241	12	28	60	31	8	6306-2Z	6205-2Z	30*47*7	25*40*7	160	110	130	0	M8
	6	Q2E132M6A	Alüminyum	279	475,5	2*M32	140	216	132	314	12	38	80	41	10	6208-2Z	6208-2Z	40*62*10	40*62*10	200	130	165	0	M10
4,0	2	Q2E100L2DE	Alüminyum	217	352,0	1*M25	140	160	100	241	12	28	60	31	8	6306-2Z	6205-2Z	30*47*7	25*40*7	160	110	130	0	M8
	2	Q2E112M2C	Alüminyum	232	395,5	2*M25	140	190	112	261	12	28	60	31	8	6306-2Z	6206-2Z	30*47*7	30*47*7	160	110	130	0	M8
	4	Q2E112M4C	Alüminyum	232	395,5	2*M25	140	190	112	261	12	28	60	31	8	6306-2Z	6206-2Z	30*47*7	30*47*7	160	110	130	0	M8
	6	Q2E132M6B	Alüminyum	279	475,5	2*M32	178	216	132	314	12	38	80	41	10	6208-2Z	6208-2Z	40*62*10	40*62*10	200	130	165	0	M10

BOYUTLAR / DIMENSIONS - B14a, B34a

				Ana Boyutlar Main Dimensions			Ayaklı Motorlar Foot Mounted Motors					Mil / Shaft				Rulman / Bearing		Keçe / Seal		Flanş / Flange (FC) (B14a)				
Güç Power (kW)	Kutup Sayısı Number of Poles	Motor Tipi Motor Type	GövdeTipi Housing Type	AC	L	O	B	A	H	HD	K	D (1)	E	GA	F (2)	Kasnak Tarafı Drive Side	Kasnak Tarafı Aksi Non Drive Side	Kasnak Tarafı Drive Side	Kasnak Tarafı Aksi Non Drive Side	P	N (3)	M	R	S
5,5	2	Q2E112M2CE	Alüminyum	232	395,5	2*M25	140	190	112	261	12	28	60	31	8	6306-2Z	6206-2Z	30*47*7	30*47*7	160	110	130	0	M8
	4	Q2E112M4D	Alüminyum	232	395,5	2*M25	140	190	112	261	12	28	60	31	8	6306-2Z	6206-2Z	30*47*7	30*47*7	160	110	130	0	M8
	2	Q2E132S2C	Alüminyum	279	440,5	2*M32	140	216	132	314	12	38	80	41	10	6208-2Z	6208-2Z	40*62*10	40*62*10	200	130	165	0	M10
	4	Q2E132M4B	Alüminyum	279	475,5	2*M32	140	216	132	314	12	38	80	41	10	6208-2Z	6208-2Z	40*62*10	40*62*10	200	130	165	0	M10
	6	Q2E132M6C	Alüminyum	279	475,5	2*M32	178	216	132	314	12	38	80	41	10	6208-2Z	6208-2Z	40*62*10	40*62*10	200	130	165	0	M10
7,5	2	Q2E132M2A	Alüminyum	279	475,5	2*M32	140	216	132	314	12	38	80	41	10	6208-2Z	6208-2Z	40*62*10	40*62*10	200	130	165	0	M10
	4	Q2E132M4C	Alüminyum	279	475,5	2*M32	178	216	132	314	12	38	80	41	10	6208-2Z	6208-2Z	40*62*10	40*62*10	200	130	165	0	M10
11,0	2	Q2E132M2AE	Alüminyum	279	475,5	2*M32	140	216	132	314	12	38	80	41	10	6208-2Z	6208-2Z	40*62*10	40*62*10	200	130	165	0	M10

(1) Toleranslar 28 mm'ye kadar DIN EN 50347 "j6", 28 mm ve üzeri "k6"
(2) DIN 6885'e göre
(3) Tolerans DIN EN 50347 "j6"

(1) Tolerance DIN 50347 "j6" up to 28 mm "k6" above 28 mm
(2) According to DIN 6885
(3) Tolerance DIN EN 50347 "j6"

BOYUTLAR / DIMENSIONS - B14b, B34b

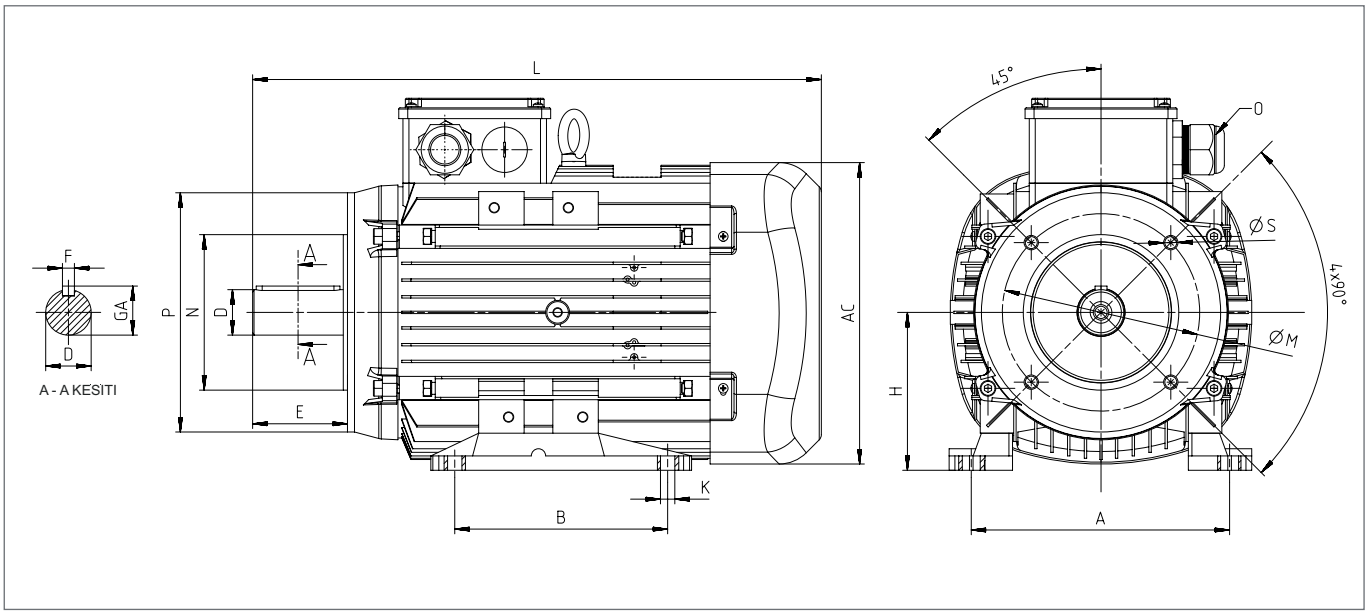

				Ana Boyutlar Main Dimensions			Ayaklı Motorlar Foot Mounted Motors					Mil / Shaft				Rulman / Bearing		Keçe / Seal		Flanş / Flange (FB) (B14b)				
Güç Power (kW)	Kutup Sayısı Number of Poles	Motor Tipi Motor Type	Gövde Tipi Housing Type	AC	L	O	B	A	H	HD	K	D (1)	E	GA	F (2)	Kasnak Tarafı Drive Side	Kasnak Tarafı Aksi Non Drive Side	Kasnak Tarafı Drive Side	Kasnak Tarafı Aksi Non Drive Side	P	N (3)	M	R	S
0,25	4	Q2E71M4B	Alüminyum	138	252,5	1*M20	90	112	71	190	7	14	30	16	5	6202-2Z	6202-2Z	15*24*5	15*24*5	140	95	115	0	M8
0,37	2	Q2E71M2C	Alüminyum	138	252,5	1*M20	90	112	71	190	7	14	30	16	5	6202-2Z	6202-2Z	15*24*5	15*24*5	140	95	115	0	M8
	4	Q2E71M4B	Alüminyum	138	252,5	1*M20	90	112	71	190	7	14	30	16	5	6202-2Z	6202-2Z	15*24*5	15*24*5	140	95	115	0	M8
0,55	2	Q2E71M2D	Alüminyum	138	252,5	1*M20	90	112	71	190	7	14	30	16	5	6202-2Z	6202-2Z	15*24*5	15*24*5	140	95	115	0	M8
	4	Q2E80M4B	Alüminyum	158	283,5	1*M20	100	125	80	195	10	19	40	21,5	6	6204-2Z	6204-2Z	20*30*7	20*30*7	160	110	130	0	M8
0,75	2	Q2E71M2DE	Alüminyum	138	252,5	1*M20	90	112	71	190	7	14	30	16,0	5	6202-2Z	6202-2Z	15*24*5	15*24*5	140	95	115	0	M8
	2	Q2E80M2B	Alüminyum	158	283,5	1*M20	100	125	80	195	10	19	40	21,5	6	6204-2Z	6204-2Z	20*30*7	20*30*7	160	110	130	0	M8
	4	Q2E80M4D	Alüminyum	158	283,5	1*M20	100	125	80	195	10	19	40	21,5	6	6204-2Z	6204-2Z	20*30*7	20*30*7	160	110	130	0	M8
	6	Q2E90L6C	Alüminyum	193	316,5	1*M25	100	140	90	222	10	24	50	27	8	6305-2Z	6205-2Z	25*40*7	25*40*7	160	110	130	0	M8
1,1	2	Q2E80M2D	Alüminyum	158	283,5	1*M20	100	125	80	195	10	19	40	21,5	6	6204-2Z	6204-2Z	20*30*7	20*30*7	160	110	130	0	M8
	4	Q2E80M4DE	Alüminyum	158	283,5	1*M20	100	125	80	195	10	19	40	21,5	6	6204-2Z	6204-2Z	20*30*7	20*30*7	160	110	130	0	M8
	4	Q2E90L4C	Alüminyum	193	316,5	1*M25	100	140	90	222	10	24	50	27	8	6305-2Z	6205-2Z	25*40*7	25*40*7	160	110	130	0	M8
	6	Q2E90L6D	Alüminyum	193	344,5	1*M25	125	140	90	222	10	24	50	27	8	6305-2Z	6205-2Z	25*40*7	25*40*7	160	110	130	0	M8
1,5	2	Q2E80M2DE	Alüminyum	158	283,5	1*M20	100	125	80	195	10	19	40	21,5	6	6204-2Z	6204-2Z	20*30*7	20*30*7	160	110	130	0	M8
	2	Q2E90L2C	Alüminyum	193	316,5	1*M25	100	140	90	222	10	24	50	27	8	6305-2Z	6205-2Z	25*40*7	25*40*7	160	110	130	0	M8
	4	Q2E90L4D	Alüminyum	193	316,5	1*M25	125	140	90	222	10	24	50	27	8	6305-2Z	6205-2Z	25*40*7	25*40*7	160	110	130	0	M8
	6	Q2E100L6D	Alüminyum	217	352,0	1*M25	140	160	100	241	12	28	60	31	8	6306-2Z	6205-2Z	30*47*7	25*40*7	200	130	165	0	M10
2,2	2	Q2E90L2D	Alüminyum	193	316,5	1*M25	125	140	90	222	10	24	50	27	8	6305-2Z	6205-2Z	25*40*7	25*40*7	160	110	130	0	M8
	4	Q2E90L4DE	Alüminyum	193	344,5	1*M25	125	140	90	222	10	24	50	27	8	6305-2Z	6205-2Z	25*40*7	25*40*7	160	110	130	0	M8
	4	Q2E100L4C	Alüminyum	217	352,0	1*M25	140	160	100	241	12	28	60	31	8	6306-2Z	6205-2Z	30*47*7	25*40*7	200	130	165	0	M10
	6	Q2E112M6C	Alüminyum	232	395,5	2*M25	140	190	112	261	12	28	60	31	8	6306-2Z	6206-2Z	30*47*7	30*47*7	200	130	165	0	M10
3,0	2	Q2E90L2DE	Alüminyum	193	316,5	1*M25	125	140	90	222	10	24	50	27	8	6305-2Z	6205-2Z	25*40*7	25*40*7	160	110	130	0	M8
	2	Q2E100L2C	Alüminyum	217	352,0	1*M25	140	160	100	241	12	28	60	31	8	6306-2Z	6205-2Z	30*47*7	25*40*7	200	130	165	0	M10
	4	Q2E100L4D	Alüminyum	217	352,0	1*M25	140	160	100	241	12	28	60	31	8	6306-2Z	6205-2Z	30*47*7	25*40*7	200	130	165	0	M10
	6	Q2E132M6A	Alüminyum	279	475,5	2*M32	140	216	132	314	12	38	80	41	10	6208-2Z	6208-2Z	40*62*10	40*62*10	250	180	215	0	M12 veya 15
4,0	2	Q2E100L2DE	Alüminyum	217	352,0	1*M25	140	160	100	241	12	28	60	31	8	6306-2Z	6205-2Z	30*47*7	25*40*7	200	130	165	0	M10
	2	Q2E112M2C	Alüminyum	232	395,5	2*M25	140	190	112	261	12	28	60	31	8	6306-2Z	6206-2Z	30*47*7	30*47*7	200	130	165	0	M10
	4	Q2E112M4C	Alüminyum	232	395,5	2*M25	140	190	112	261	12	28	60	31	8	6306-2Z	6206-2Z	30*47*7	30*47*7	200	130	165	0	M10
	6	Q2E132M6B	Alüminyum	279	475,5	2*M32	178	216	132	314	12	38	80	41	10	6208-2Z	6208-2Z	40*62*10	40*62*10	250	180	215	0	M12 veya 15

BOYUTLAR / DIMENSIONS - B14b, B34b

				Ana Boyutlar Main Dimesions			Ayaklı Motorlar Foot Mounted Motors					Mil / Shaft				Rulman / Bearing		Keçe / Seal		Flanş / Flange (FB) (B14b)				
Güç Power (kW)	Kutup Sayısı Number of Poles	Motor Tipi Motor Type	Gövde Tipi Housing Type	AC	L	O	B	A	H	HD	K	D(1)	E	GA	F(2)	Kasnak Tarafı Drive Side	Kasnak Tarafı Aksi Non Drive Side	Kasnak Tarafı Drive Side	Kasnak Tarafı Aksi Non Drive Side	P	N(3)	M	R	S
5,5	2	Q2E112M2CE	Alüminyum	232	395,5	2*M25	140	190	112	261	12	28	60	31	8	6306-2Z	6206-2Z	30*47*7	30*47*7	200	130	165	0	M10
	4	Q2E112M4D	Alüminyum	232	395,5	2*M25	140	190	112	261	12	28	60	31	8	6306-2Z	6206-2Z	30*47*7	30*47*7	200	130	165	0	M10
	2	Q2E132S2C	Alüminyum	279	440,5	2*M32	140	216	132	314	12	38	80	41	10	6208-2Z	6208-2Z	40*62*10	40*62*10	250	180	215	0	M12 veya 15
	4	Q2E132M4B	Alüminyum	279	475,5	2*M32	140	216	132	314	12	38	80	41	10	6208-2Z	6208-2Z	40*62*10	40*62*10	250	180	215	0	M12 veya 15
	6	Q2E132M6C	Alüminyum	279	475,5	2*M32	178	216	132	314	12	38	80	41	10	6208-2Z	6208-2Z	40*62*10	40*62*10	250	180	215	0	M12 veya 15
7,5	2	Q2E132M2A	Alüminyum	279	475,5	2*M32	140	216	132	314	12	38	80	41	10	6208-2Z	6208-2Z	40*62*10	40*62*10	250	180	215	0	M12 veya 15
	4	Q2E132M4C	Alüminyum	279	475,5	2*M32	178	216	132	314	12	38	80	41	10	6208-2Z	6208-2Z	40*62*10	40*62*10	250	180	215	0	M12 veya 15
11,0	2	Q2E132M2AE	Alüminyum	279	475,5	2*M32	140	216	132	314	12	38	80	41	10	6208-2Z	6208-2Z	40*62*10	40*62*10	250	180	215		M12 veya 15

(1) Toleranslar 28 mm'ye kadar DIN EN 50347 "j6", 28 mm ve üzeri "k6"
(2) DIN 6885'e göre
(3) Tolerans DIN EN 50347 "j6"

(1) Tolerance DIN EN 50347 "j6" up to 28 mm "k6" above 28 mm
(2) According to DIN 6885
(3) Tolerance DIN EN 50347 "j6"

B3-B5-B14 FLANŞLI MOTOR PARÇA LİSTESİ / THE MOTOR PART LIST WITH B3-B5-B14 FLANGE

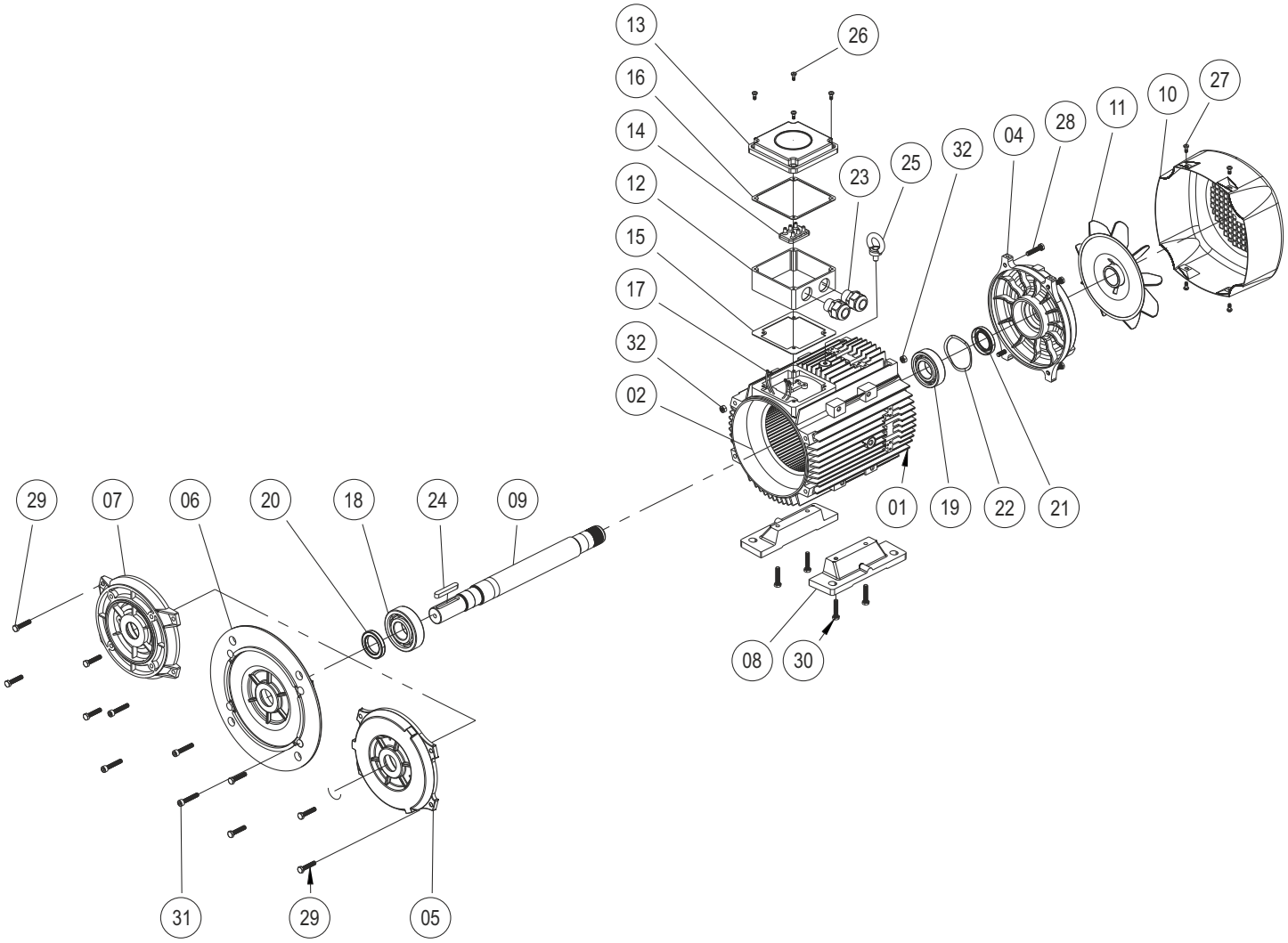

01	**Gövde**	01	Housing
02	**Sargılı Stator**	02	Wound Stator
03	**Rotor**	03	Rotor
04	**Motor Arka Kapağı**	04	Nondrive - Endshield
05	**B3 Motor Bağlantı Flanşı**	05	Flange
06	**B5 Motor Bağlantı Flanşı**	06	Flange
07	**B14 Motor Bağlantı Flanşı**	07	Flange
08	**Ayak**	08	Foot
09	**Motor Mili (Standart)**	09	Drive Shaft (Gearcut)
10	**Fan Kapağı**	10	Fan Cover
11	**Fan**	11	Fan
12	**Terminal Kutusu**	12	Terminal Box
13	**Terminal Kutu Kapağı**	13	Terminal Box Cover
14	**Klemens Plakası**	14	Terminal Plate
15	**Terminal Contası Alt**	15	Terminal Gasket Down
16	**Terminal Contası Üst**	16	Terminal Gasket Up
17	**Kablo Grubu**	17	Lead Cables
18	**Ön Rulman**	18	Bal Bearing (Drive-Side)
19	**Arka Rulman**	19	Bal Bearing (Non-Drive-Side)
20	**Keçe (Ön)**	20	Seal Ring (Front)
21	**Keçe (Arka)**	21	Seal Ring (Back)
22	**Rulman Gergi Yayı**	22	Bearing Shim
23	**Rakor**	23	Conduit
24	**Kama**	24	Key
25	**Mapa**	25	Eye Bolt
26	**Yıldız Başlı Civata**	26	Pan Head Secrews
27	**Yıldız Başlı Civata**	27	Pan Head Secrews
28	**Civata DIN 933**	28	Bolt
29	**Civata DIN 933**	29	Bolt
30	**Civata DIN 933**	30	Bolt
31	**Civata DIN 912**	31	Bolt
32	**Somun**	32	Nut

FRENLİ B3-B5-B14 FLANŞLI MOTOR PARÇA LİSTESİ / THE MOTOR PART LIST WITH BRAKE AND B3-B5-B14 FLANGE

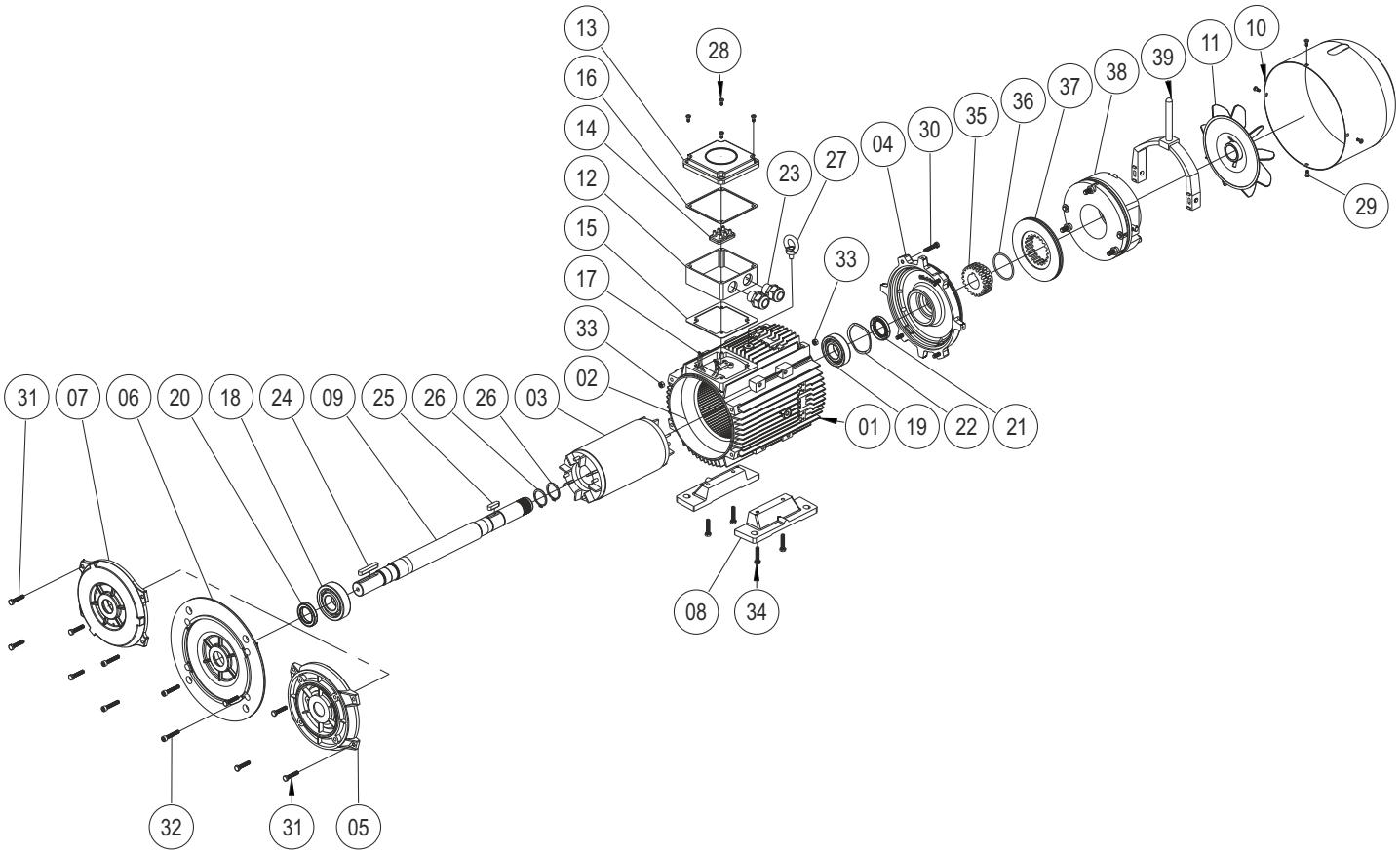

01	**Gövde**	01	Housing
02	**Sargılı Stator**	02	Wound Stator
03	**Rotor**	03	Rotor
04	**Fren Flanşı**	04	Brake Connection Flange
05	**B3 Motor Bağlantı Flanşı**	05	Flange
06	**B5 Motor Bağlantı Flanşı**	06	Flange
07	**B14 Motor Bağlantı Flanşı**	07	Flange
08	**Ayak**	08	Foot
09	**Motor Mili (Standart)**	09	Drive Shaft (Gearcut)
10	**Fan Kapağı**	10	Fan Cover
11	**Fan**	11	Fan
12	**Terminal Kutusu**	12	Terminal Box
13	**Terminal Kutu Kapağı**	13	Terminal Box Cover
14	**Klemens Plakası**	14	Terminal Plate
15	**Terminal Contası Alt**	15	Terminal Gasket Down
16	**Terminal Contası Üst**	16	Terminal Gasket Up
17	**Kablo Grubu**	17	Lead Cables
18	**Ön Rulman**	18	Bal Bearing (Drive-Side)
19	**Arka Rulman**	19	Bal Bearing (Non-Drive-Side)
20	**Keçe (Ön)**	20	Seal Ring (Front)
21	**Keçe (Arka)**	21	Seal Ring (Back)
22	**Rulman Gergi Yayı**	22	Bearing Shim
23	**Rakor**	23	Conduit
24	**Kama**	24	Key
25	**Kama**	25	Key
26	**Segman**	26	Circilip DIN 471
27	**Mapa**	27	Eye Bolt
28	**Yıldız Başlı Civata**	28	Pan Head Secrews
29	**Yıldız Başlı Civata**	29	Pan Head Secrews
30	**Civata DIN 933**	30	Bolt
31	**Civata DIN 933**	31	Bolt
32	**Civata DIN 912**	32	Bolt
33	**Somun**	33	Nut
34	**Civata DIN 933**	34	Bolt
35	**Fren Kaplini**	35	Coupling
36	**O-Ring**	36	O-Ring
37	**Fren Balatası**	37	Brake Lining
38	**Fren**	38	Brake
39	**Manuel Kolu**	39	Hand Release

TR FREN PARÇA LİSTESİ VE ÖZELLİKLERİ

EN BRAKE PART LIST AND PROPERTIES

1 Elektro mıknatıs	**1** Electromagnet
2 Endüvi plakası	**2** Armature plate
3 Tork yayı	**3** Torque springs
4 Disk	**4** Disc
5 Kamalı burç	**5** Splined hub
6 O-ring	**6** O-ring
7 Ayar halkası	**7** Adjuster rings
8 Ayar somunu	**8** Adjuster nuts
9 Bağlantı cıvataları	**9** Fixing screws

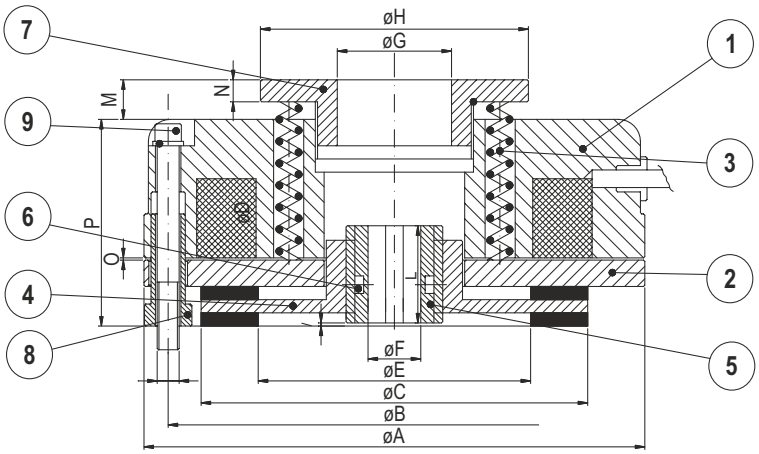

Tip / Type Fren Modeli / Brake Model		K1	K2	K3	K4	K5	K6	K7	K7/D	K8	K8/D	K9	K9/D	K9/T
Statik Fren Momenti Static Braking Torque	(Nm)	5	12	16	20	40	60	90	180	200	400	300	600	900
Motorun Max. Hızı Max Speed of the motor	(rpm)	3000	3000	3000	3000	3000	3000	3000	3000	1500	1500	1500	1500	1500
Giriş Gücü Input Power	(W)	15	20	25	30	45	50	55	55	60	60	65	65	65
Max. Ses Max noisiness	(≤dB-A)	68	69	68	69	70	70	70	70	70	69	69	69	70
Ağırlık Weight	(Kg.)	1,1	1,85	2,55	2,84	4,8	7	12	15	14,3	18	23	28	34
	A	84	104	114	124	148	159	189	189	218	218	248	248	248
	B	72	90	103	112	132	145	170	170	196	196	230	230	230
	C	61	77	88	98	119	128	151	151	176	176	204	204	204
	D	3xM4	3xM5	3xM5	3xM6	3xM6	3xM8	3xM8	3xM8	6xM10	6xM10	6xM10	6xM10	9xM10
Delik toleransı K3'e kadar H7, diğerleri + 0,01/-0,01 Tollerance hole till size K3 H7, others + 0,01/-0,01	E	35	44	62	69	79	80	90	90	103	103	132	132	132
	F	10-11 12	11-14 15	11-15	14-25	24-25 28	25-30 34	25-30 34	25 H40 34 H60	24-34	34 H60 48	44-45 48	44-45 48	44-45 48-50
	G	20	26	26	42	60	60	60	60	60	60	60	60	60
	H	50	61	61	79	104	104	104	104	104	104	104	104	104
	I	1,5	1,5	1,5	1,5	1,5	1,5	1,5	1,5	1,5	1,5	1,5	1,5	1,5
	L	18	20	20	20	25	30	30	60	40	60	40	60	80
	M (max)	9	9	9	9,5	18	16	14	14	18	18	18	18	18
	N	4	4	4	5,5	8	8	8	8	8	8	8	8	8
	O	0,2	0,2	0,2	0,2	0,3	0,3	0,3	0,3	0,3	0,4	0,4	0,4	0,4÷0,5
	P	38,5	41,5	47	46,5	64	69,5	79	101,5	78	98	80	105	130

Not : Fren çalıştırılmadan önce statik fren momenti tabloda verilen değerlere göre ± % 20 değişiklik gösterebilir.
Note : The brake before running in, the static braking torque value could change by +20% from the reported value.

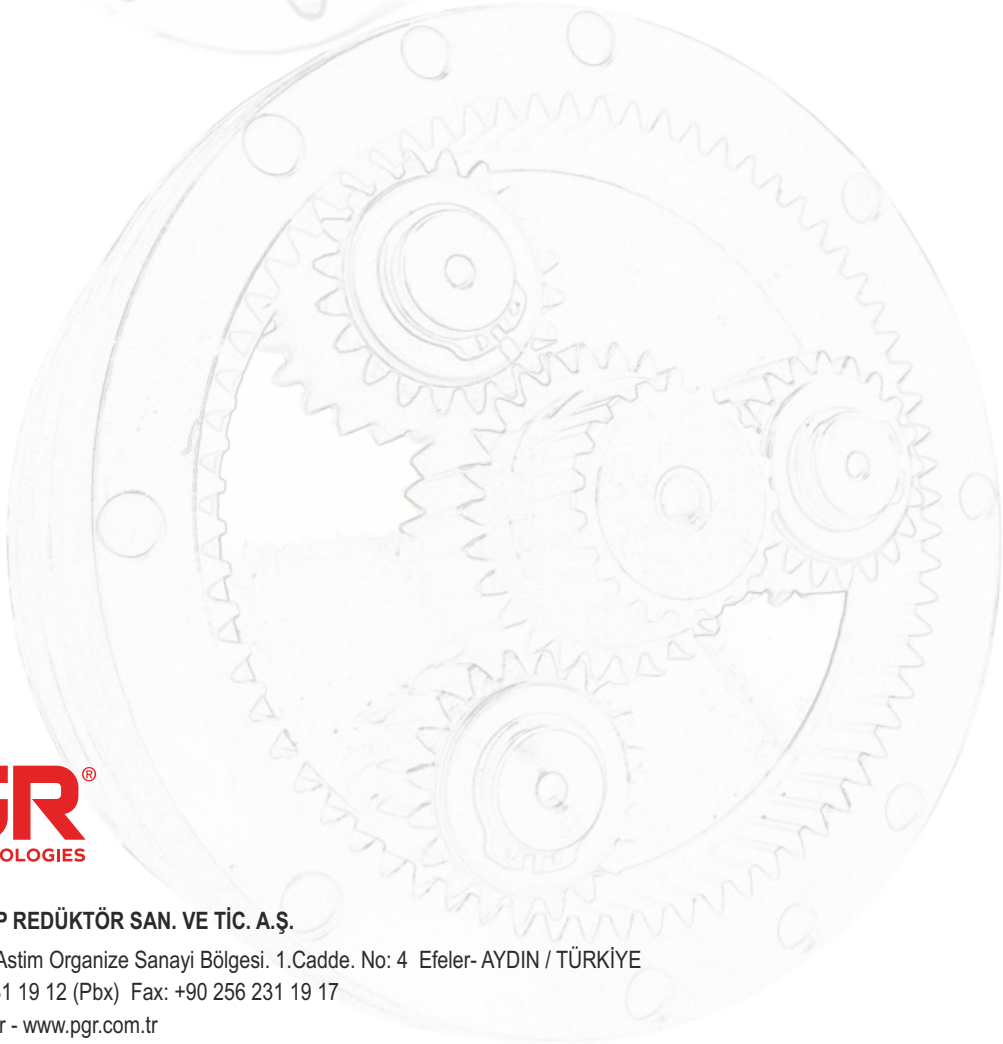

PGR®
DRIVE TECHNOLOGIES

POLAT GROUP REDÜKTÖR SAN. VE TİC. A.Ş.

Ata Mahallesi. Astim Organize Sanayi Bölgesi. 1.Cadde. No: 4 Efeler- AYDIN / TÜRKİYE
Tel: +90 256 231 19 12 (Pbx) Fax: +90 256 231 19 17
info@pgr.com.tr - www.pgr.com.tr

POLATGROUP