www.pgr.com.tr

PGR®
DRIVE TECHNOLOGIES

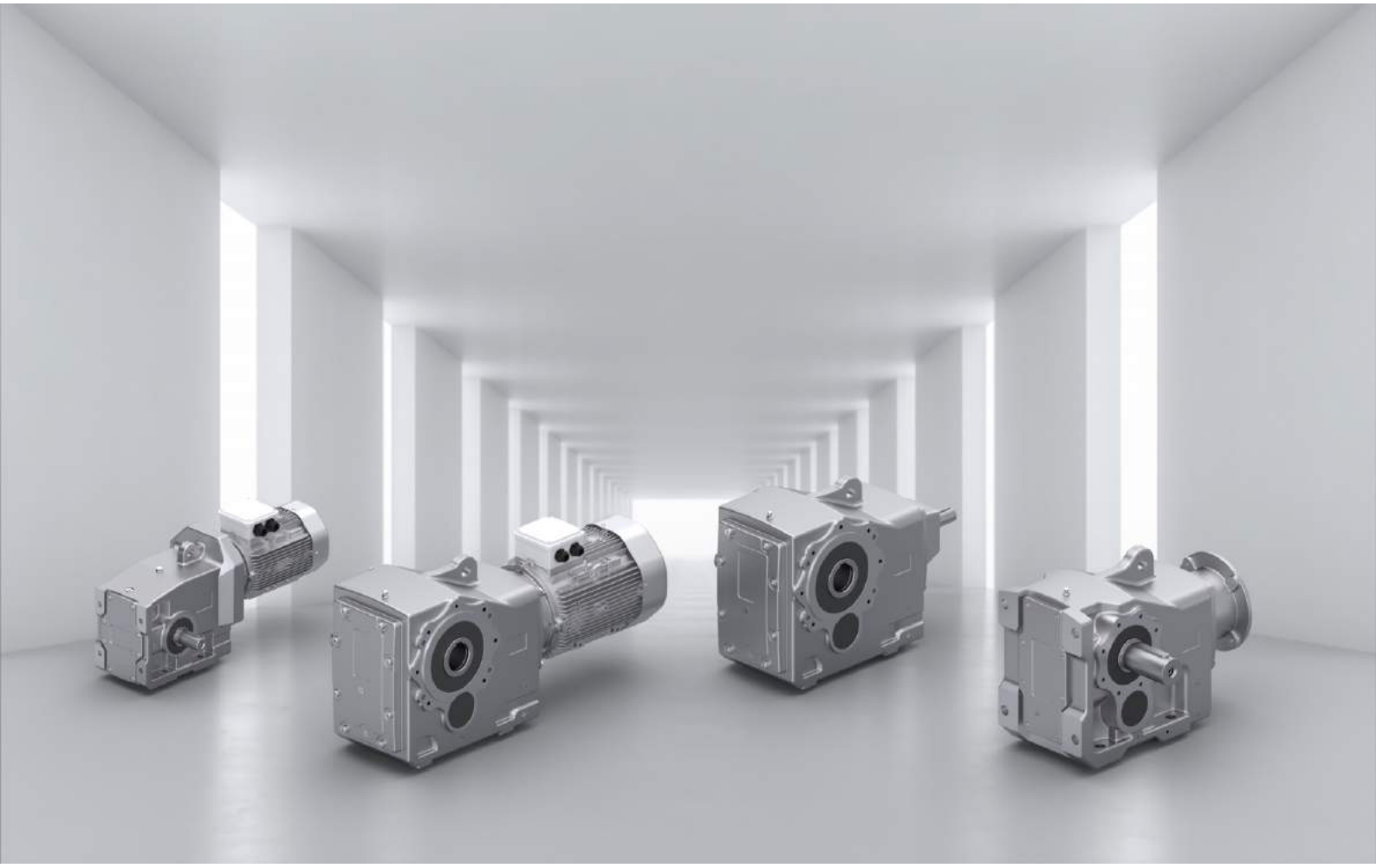

PKD SERIES

Helisel Konik Dişli Redüktör
Helical Bevel Gear Units
Kegelstirnradgetriebemotoren

IE2 | IE3

TR | EN | DE

PGR®
DRIVE TECHNOLOGIES

Kataloğumuzda yer alan bilgileri, önceden haber vermeksizin kısmen veya tamamen değiştirme veya iptal etme hakkını saklı tutmaktayız.

We reserve the right to our company to make changes or modifications to catalogue without prior notice.

Eine änderung in diesem Katalog der Technischen Werte sowie Daten und Maßen und Gewichte bleiben vorbehalten

PGR®

DRIVE TECHNOLOGIES

TR İÇİNDEKİLER | EN CONTENTS | DE INHALT

Giriş / Intro / Einführung 2
Teknik Bilgiler / Technical Information / Technische Information ..... 3 - 9
Radyal Yük Hesabı / Calculation of Overhung loads / Berechnung Qerbelastung ..... 10 - 13
Kısaltmalar / Abbrevitions / Abkürzungen 14
PKD Tanıtımı / Description of PKD / PKD-Einführung ..... 15 - 16
W, IEC ve PAM Adaptörü / W, IEC and PAM Adapter / W, IEC und PAM Adapter 17
Uygulama Alanları / Application Areas / Einsatzbereiche ..... 18 - 22
Kullanılan Terimler / Nomenclature / Begriffe ..... 23 - 24
PKD Modüler Sistemi / Modular System of PKD / PKD Modulares System 25
Mevcut Dizaynlara Genel Bakış / Overview of Available Designs / Übersicht Aktuelle Designs 26
Ürünlerimiz / Our products / Unsere produkte ..... 27 - 39
Redüktör Seçim Formu / Gearbox Selection Form / Formular für Getriebeauswahl ..... 40 - 42
Sipariş Örneği / Example for Ordering / Beispiel Bestellbeschreibung 43
Montaj Pozisyonları / Mounting Positions / Eınbaulagen ..... 44 - 48
Yağlama / Lubrication / Schmierung 49
Yağ Miktar Tablosu / Lubrication Levels / Schmierstofftabelle ..... 50 - 51
Kilit Sistemi / Backstop / Rücklaufsperre 52
Toleranslar / Tolerances / Toleranzen 53
Servo Motor Adaptörü / Servomotors Adapter / Adapter Zum Anbau Von Servomotoren 54
Konik Sıktırma / Shrink Disc / Schrumpfscheıbe 55
Güçlendirilmiş Konik Sıktırma / With Reinforced Shrink Disc Connector / Verstärkte Schrumpfscheibe 56
Güçlendirilmiş Konik Sıktırma Koruma Kapağı / Cover of Reinforced Shrink Disc / Abdeckung Der Verstärkten Schrumpfscheibe 57
Ayak Montajlı, Çift Mil Çıkışlı / Foot Mounted, Solid Shaft on Both Sides / Fussmontage, Doppelwellenausgang 58
Ayak Montajlı, B14 Flanşlı / Foot Mounted, Flange B14 / Fussmontage, B14 Flansch 59
Ayak Montajlı B5 Flanşlı / Foot Mounted, Flange B5 / Fussmontage, B5 Flansch 60
B5 Flanşı Ölçüleri / Dimension of Flange B5 / B5 Flanschabmessungen 61
Güçlendirilmiş B5 Flanşı / Reinforced B5 Flange / Verstärkter B5 Flansch ..... 62 - 63
Konik Sıktırmalı Güçlendirilmiş B5 Flanşı / Reinforced B5 Flange With Shrink Disc / Verstärkter B5 Flansch Mit Schrumpfscheıbe 64
Tork Kolu / Torque Arm / Drehmomentarm 65
Tork Kolu ve Platformu / Torque Arm and Platform / Drehmomentarm-plattform 66
Tork Kolu Platformu Delikleri / Torque Arm Platform Holes / Drehmomentarm Plattform Löcher 67
Koruma Kapağı / Cover / Schutzhülle 68
IP 66 Uygulaması / Protection IP 66 / Schutz Ip 66 69
Su Soğutmalı / Water Cooling / Wasserkühlung 70
M4 Pazisyonu için İlave Yağ Hacmi / Additional Lubricant Volume For Mounting Position M4 / Zusätzliches Ölvolumen Für M4 Einbauposition 71
Yağ Soğutmalı / Oil Cooling / Ölkühler 72
Mekanik Keçe / Mechanical Seal / Mechanısche Fılz 73
Çektirme Kiti / Puller Kit / Aufziehvorrichtung 74
Çektirme Ölçü Tablosu / Dimension Table of Fixing Element / Größentabelle Abziehvorrichtung 75
Motor Platformu / Motor Platform Installation / Motorkonsolen ..... 76 - 77
V Kayış ve Kayış Kasnak Seçimi / V Belt And Belt Pulley Selectıon / Auswahl Von V Rıemen Und Rıemenscheıbe 78
Motorlu Seçim Tabloları / Selection Tables of Gearedmotors / Auswahltabellen der Getriebemotoren ..... 79 - 183
Ölçü Tabloları / Dimension Tables / Maßtabellan ..... 185 - 284
W-IEC-PAM Adaptörü Seçim Tabloları / Selection Tables of W-IEC- PAM Adapters / Auswahltabelle von W-IEC-PAM Adapters ..... 285 - 302
Genel Parça Listeleri / General Part Lists / Allgemenie Stuckliste ..... 303 - 325
Elektrik Motoru / Electrical Motor / Electromotoren ..... 327 - 356
Motor Parça Listesi / Motor Parts List / Motor Teileliste ..... 358 - 363
Fren Parça Listesi / Brake Parts List / Bremse Teile 364

TR KALİTE POLİTİKAMIZ

Polat Group Redüktör San. ve Tic. A.Ş., en iyiyi yakalamak için; İş Sağlığı ve Güvenliği, Çevre Güvenliği ve Kalite Yönetim Sistemi uygulamalarını, Üretim ve Hizmet sürecinin vazgeçilmez bir unsuru olarak değerlendirmekte ve uygulamaktadır.

Bu doğrultuda;

- Yayınlanmış ulusal/uluslararası yasal şartlar ve diğer şartlara uymak ve güncelliğini takip etmeyi;
- Atıkları kaynağında azaltmak ve teknolojik imkanlar ile çevre etkilerini kontrol altında tutmayı;
- Bünyemizde uygulanan yönetim sistemlerinin performansının değerlendirmek ve sürekli iyileştirmeyi;
- Eğitimlerle çalışanlarımızı çevre, iş sağlığı ve güvenliği ve Kalite yönetim sistemleri konusunda bilinçlendirmeyi;
- Çalışan sağlığının ve çevrenin korunması için çalışmaları mızı güncel tutmayı;
- Sektöründeki teknolojik gelişmeleri takip etmeyi, pazar payındaki istikrarını sürdürmek için müşterilerinin istek ve beklentilerine eksiksiz ve zamanında cevap vererek sürekli artan müşteri memnuniyetini sağlamayı, eğitimli çalışanlarının performansını, huzurlu bir çalışma ortamı sağlayarak artırmayı;

Şirket politikası olarak benimsemiştir.

EN OUR QUALITY POLICY

Polat Group Redüktör San. ve Tic. A.Ş., considers and applies Occupational Health and Safety, Environmental Safety and Quality Management System as the inseparable part of Production and Service process.

In line with this, our company adopts:

- Complying with published national/international legal provisions and other conditions and following up-to-datedness thereof;
- Reducing wastes in resources and keeping environmental impacts under control with technological opportunities;
- Assessing and constantly improving performance of management systems applied within our company;
- Raising awareness of our employees about occupational health and safety and quality management systems through trainings;
- Keeping our activities up-to-dated to protect personnel health and environmental protection;
- Following technological developments in the sector, ensuring ever-increasing customer satisfaction by responding to requests and expectations of customers completely and duly to sustain stability in the market share and increasing performance of trained employees by providing a peaceful working environment;

as the company policy.

DE UNSERE QUALITÄTSPOLITIK

Polat Group Redüktör San. ve Tic. A.Ş., um an das Beste zu gelangen; es bewertet und implementiert die Praktiken des Arbeitsschutz-, Umweltsicherheits- und Qualitätsmanagementsystems als unverzichtbares Element des Produktions- und Serviceprozesses.

In diese Richtung;

- Einhaltung und Befolgung der aktualisierten nationalen / internationalen gesetzlichen und sonstigen Anforderungen;
- Abfall an seiner Quelle zu reduzieren und technologische Möglichkeiten und Umweltauswirkungen unter Kontrolle zu halten;
- Bewertung und kontinuierliche Verbesserung der Leistung der in unserer Struktur implementierten Managementsysteme;
- Sensibilisierung unserer Mitarbeiter für Umwelt-, Arbeitsschutz- und Qualitätsmanagementsysteme durch Schulungen;
- Um unsere Arbeit zum Schutz der Gesundheit und der Umwelt der Mitarbeiter auf dem neuesten Stand zu halten;
- Verfolgung der technologischen Entwicklungen in der Branche, Gewährleistung der stetig steigenden Kundenzufriedenheit durch vollständige und pünktliche Reaktion auf die Anforderungen und Erwartungen ihrer Kunden, um ihre Marktanteilsstabilität zu erhalten, Steigerung der Leistung ihrer geschulten Mitarbeiter durch Schaffung eines friedlichen Arbeitsumfelds;

hat sie als Unternehmenspolitik übernommen.

VİZYONUMUZ

Müşteri ve çalışan memnuniyetini en üst düzeyde tutan, gelişmeleri izleyen değil yaratan bir dünya şirketi olmaktır.

MİSYONUMUZ

Müşterilerimizin ihtiyaçlarını karşılayacak çözümleri bilgi teknolojilerini kullanarak en verimli ve kaliteli şekilde sunmaktır.

Polat Group Redüktör olarak birçok farklı ürün yelpazesi ile, müşteri ihtiyacını maksimum seviyede karşılamak için eş zamanlı mühendislik yöntemlerini kullanarak çalışmalarını sürdürmektedir. Tasarım faaliyetleri, ürün geliştirme programları ve bilgisayar destekli çalışmalarımız sürekli gelişen bir grafik çizmektedir. Rekabetçi ve güçlü kalite politikamız müşteri yelpazemizi genişletmektedir.

OUR VISION

Our vision is to become a world company which meets and surpasses the customer satisfaction and which not only follows the development but also creates the development itself.

OUR MISSION

Our mission is to provide the solutions to our customers in the most efficient and qualified way by making use of the information technologies.

Our reducer group carries out its work using simultaneous engineering methods in order to meet the demands of our customers by presenting several different product ranges. Design and planning activities, product development programmes and computer supporting work show a continuously growing chart. Our competitive and strong quality policy is to develop our customer spectrum.

UNSERE VISION

Unsere Vision ist ein Weltunternehmen zu erschaffen, das die Kunden - und Mitarbeiterzufriedenheit ständig im höchsten Zustand haltet und die Entwicklungen nicht nur verfolgt, sondern auch gestaltet.

UNSER ZIEL

Unser Ziel ist unseren Kunden die Produkte, Qualitäts- und Dienstleistungen sowie Lösungen, die die Kundenerwartungen übertreffen und im besten und leistungsfähigsten Zustand mit Hilfe der neuesten Informationstechnologien zu bieten.

Polat Group Redüktör GmbH führt sämtliche Tätigkeiten des Ingenieurwesens gleichzeitig weiter, um die Kundenerwartungen an alle unsere Produkte aus verschiedenen Produktpalletten im höchsten Zustand zu übertreffen. Unsere Entwurfstätigkeiten und Produktentwicklungsprogramme und EDV unterstützten Arbeitsprozesse zeigen eine steigernde Grafik. Unsere wettbewerbsfähige und kräftige Qualitätspolitik vergrößert unseren Kundenumfang weiter.

TR TEKNİK BİLGİLER

Redüktör Seçimi

Bir redüktör seçilirken, PGR üç fazlı asenkron AC motorları ve tek fazlı AC motorları kullanıldığını öngörür. Bu aynı zamanda teknik olarak karşılaştırılabilen tüm motorlar için de geçerlidir. Herhangi başka bir motor kullanımı halinde PGR'ye danışınız. Dişli ünitesinin seçimi yapılırken aşağıda belirtilen ana esaslara bağlı kalınmaz ise ünitede istenmeyen aşırı yüklenme durumları açığa çıkabilir. Bu durumda tarafımızdan verilen tüm garantiler kapsam dışına çıkar.
Kullanılacak redüktörden yüksek verim alabilmenin ilk adımı size uygun olan doğru ürünü seçebilmektir.

Redüktör seçimi yapılırken aşağıdaki kritik hususlara dikkat edilmelidir. Bunlar Mekanik kontrol, termal limit kontrolü, redüktör mili üzerine gelebilecek radyal ve eksenel yük kontrolleri ve servis faktörü kontrolüdür.

Hangi redüktörün sizin makinanız için uygun olduğuna, makinanızın çalışma şartlarına göre gerekli giriş gücü, istenilen tahvil oranı ve servis faktörü değerlerinin belirlenmesinden sonra karar verilmelidir. Optimum çalışma şartları sağlanacak redüktördeki aşırı yüklenmeden kaynaklı tüm problemlerin oluşması engellenmelidir.

Seçim yapılırken dikkat edilmesi gereken önemli unsurlardan biri de kullanılan harici yedek parçalar, giriş ve çıkış aksesuarlarıdır. PGR'nin önerdiği ürünler haricinde ekipman kullanımı veya redüktörün zarar görebileceği şüpheli durumlarda PGR satış departmanı ile irtibata geçilmeli, teknik veriler ve tasarım tekrar kontrol edilmelidir.

Firmadan habersiz yapılan uygulama ve yanlış seçimler sonucunda redüktör ile ilgili yaşanan problemlerde tarafımızdan verilen tüm garantiler kapsam dışına çıkar.

Redüktör Seçim Kriterleri

1.Mekanik kontrol:
İlk olarak makinanızın çalışma şartlarının bilinmesi gerekir. Bunlar günlük çalışma süresi, saatteki start-stop sayısı ve makineden gelecek yükün hangi yük sınıfı içerisinde olduğunun belirlenmesidir.
Yük sınıfı ise motor miline indirgenmiş toplam dış atalet momentinin, motor atalet momentine oranından elde edilen sayıya (maf) göre belirlenir. maf ≤ 0.25 ise düzgün çalışma yük sınıfı (U), 0.25 < maf ≤ 3 ise orta darbeli yük sınıfı (M) ve 3 < maf ≤ 10 ise çalışmanın ağır darbeli yük sınıfında (H) olduğu anlamına gelir.
Günlük çalışma süresi ve saatteki start-stop sayısı makinanın çalışma şartlarından kolayca belirlenir. Sonrasında sayfa 4'deki diyagram 1 kullanılarak mekanik yönden gerekli servis faktörü değeri bulunur.

2.Termal Limit Kontrolü
Redüktörde bazı çalışma koşullarında aşırı ısınma gözlenebilir. Termal sınırlar kataloglardaki termal yönden müsaade edilen motor güç değerlerine bakılarak kontrol edilmelidir. Termal güç değerlerinin yeterli olmadığı durumlarda çalışma koşullarına göre verilecek ilave soğutucularla (fan, serpantin, eşanjör, radyatör vb.) termal güç değerlerini arttırmak mümkündür.

Redüktörün aşırı ısınmaması için güç transferi sürelerinin belirlenen çalışma zamanının aşılmaması gereklidir.
Termal olarak transfer edilebilen güç süresi (3saat) sadece PA/PF62, PD/PM62, PKD 6390 ve daha büyük gövdeler için olası bir sınırı temsil eder.

EN TECHNICAL INFORMATION

Gearbox Selection

When selecting gear unit , PGR assumes that three-phase AC motor or single phase AC motor are used. This is also valid for technically comperable motors. If you intend to use a motor other than PGR, please contact with PGR. If you do not obey the main instructions which are given below, you may have some problems like overloading. In these situations, our all guarantees will be invalid. If you want get high efficiency from our products, the main step is choosing right product.

At reducer choosing step, you should be careful about following points like mechanical control, thermal limit control, the radial and axial loads control which is on reducer shaft and service factor.

After deciding input power, desired ratio number and service factor, you should decide which reducer is suitable for your machines. If you want to ensure optimal working conditions, all problems caused by overloading should be prevented.

At choosing step, external spare parts, input and output accessories has also importonce. When using equipments which are not adviced by PGR and under suspecious situation which can harm reducer, please consult to PGR sales office department which is responsible for giving technical information to you.

Applications which are done without information of us and wrong selections are out of guarantee.

The conditions of selecting gear unit are as the following:

1.Mechanical control:
Firstly, you should know working conditions of your machine. These are daily working time,revolution per hours and loads which are applied from driven machine to gear unit should be known in which load classification.
Load Classification can be determined from ratio between external moment of inertia and motor moment of inertia(maf)
If maf ≤ 0.25 it is Uniform application(U)
0.25 < maf ≤ 3 it is Moderate impact application(M)
3 < maf ≤ 10 it is Heavy impact application(H)

You can easily decide to daily working time, revolution per hours from working conditions of machine. After that, you can choose service factor from diagram at page 4 on mechanical way.

2.Thermal Limit Control
Overheating may happen in gearbox under some operating conditions. Thermal limits should be checked by looking at the thermally permissible motor power values at catalogues. If thermal power values are not enough, it wil be possible to increase the thermal power values with additional coolers like fan, coil, heat exchanger, radiator, etc.,and they should be be given according to the operating conditions.

For the gearbox does not to be overheated, the power transfer times must not exceed the specified operating time. Thermally transferable power time (3hour) shows a possible limit only for PA/PF 62, PD/PM 62, PKD 6390 and larger cases.

DE TECHNISCHE INFORMATION

Getriebeauswahl

Bei der Getriebeauswahl prognostiziert PGR den Einsatz von Drehstrom-Asynchronmotoren und Einphasen-Wechselstrommotoren. Dies gilt auch für alle technisch vergleichbaren Motoren. Wenden Sie sich an PGR, wenn ein anderer Motor verwendet wird. Unerwünschte Überlastsituationen im Aggregat können auftreten, wenn bei der Auswahl des Getriebes folgende Hauptprinzipien nicht beachtet werden. In diesem Fall erlöschen alle von uns gegebenen Garantien. Der erste Schritt, um eine hohe Effizienz des zu verwendenden Reduzierstücks zu erzielen, besteht darin, das richtige Produkt auszuwählen, das zu Ihnen passt.
Bei der Auswahl des Reduzierstücks sollten die folgenden kritischen Punkte berücksichtigt werden. Dies sind mechanische Kontrolle, thermische Grenzkontrolle, quer und axiale Lastkontrolle an der Getriebewelle und Betriebsfaktorkontrolle.

Welches Getriebe für Ihre Maschine geeignet ist, sollte nach Ermittlung der erforderlichen Eingangsleistung, des gewünschten Übersetzungsverhältnisses und der Betriebsfaktorwerte entsprechend den Arbeitsbedingungen Ihrer Maschine entschieden werden. Es sollen optimale Arbeitsbedingungen geschaffen werden und alle Probleme durch Überlastung im Getriebe sollen vermieden werden.
Einer der wichtigsten Faktoren, die bei der Auswahl zu berücksichtigen sind, sind die externen Ersatzteile sowie das Eingangs- und Ausgangszubehör. Wenn andere Geräte als die von PGR empfohlenen Produkte verwendet werden oder der Verdacht auf eine Beschädigung des Getriebesbesteht, sollte der PGR-Vertrieb kontaktiert und die technischen Daten und das Design erneut überprüft werden.
Alle von uns gegebenen Garantien erlöschen im Falle von Problemen im Zusammenhang mit dem Reduzierstück aufgrund der Anwendung und falscher Entscheidungen, die ohne Wissen des Unternehmens getroffen wurden.

Auswahlkriterien für Getriebe

1.Mechanische Kontrolle:
Zunächst sollten die Arbeitsbedingungen Ihrer Maschine bekannt sein. Dies sind die tägliche Arbeitszeit, die Anzahl der Starts-Stopps pro Stunde und die Ermittlung der Belastungsklasse der Maschine.
Der Stoßgrad ergibt sich aus der Gleichmäßigkeit des Betriebes unda us dem Massenbeschleunigungsfaktor (maf).
Bei maf ≤ 0,25 gleichmäßiger Betrieb (U),
bei 0,25 < maf ≤ 3 ungleichmäßiger Betrieb (M)
und bei 3 < maf ≤ 10 stark ungleihmäßiger Betrieb (H).

Die tägliche Arbeitszeit und die Anzahl der Starts-Stopps pro Stunde lassen sich leicht aus den Arbeitsbedingungen der Maschine ermitteln. Anschließend wird anhand von Diagramm 1 auf Seite 4 der mechanisch erforderliche Betriebsfaktor-Wert ermittelt.

2. Thermische Limitkontrolle
Unter bestimmten Betriebsbedingungen kann eine Überhitzung des Getriebes beobachtet werden. Thermische Grenzen sollten anhand der thermisch zulässigen Motorleistungswerte in den Katalogen überprüft werden. In Fällen, in denen die thermischen Leistungswerte nicht ausreichen, ist es möglich, die thermischen Leistungswerte mit zusätzlichen Kühlern (Lüfter, Serpentinen Kühler, Wärmetauscher, Öl/Wasserkühler usw.) entsprechend den Betriebsbedingungen zu erhöhen.
Damit das Getriebe nicht überhitzt, dürfen die Kraftübertragungszeiten die angegebene Betriebszeit nicht überschreiten.
Die thermisch übertragbare Leistungszeit beträgt (3h) und stellt nur bei PA/PF62, PD/PM62, PKD 6390 und größeren Körpern eine mögliche Grenze dar.

TR TEKNİK BİLGİLER

Aşağıdaki maddelerden iki veya daha fazlasının geçerli olması durumunda redüktörün belirli operasyonel durumu kontrol edilmelidir. PGR ile iletişime geçmenizi öneririz.

·Ortam sıcaklığı 40°C fazla ise
·Dönme hızı n1 1500 min-1 üzerinde ise
·Motor gücü P1 100 kW ve üzeri ise
·W, IEC ve PAM adaptör bağlı redüktör söz konusu ise
·Dik olarak montaj söz konusu ise (M2 – M4)
·Tahvil oranı itop < 20 (Konik dişliler için itop < 40)

Redüktörün korunup sağlıklı çalışması için, ısı radyasyonu yoğun alanda çalışma, dar alanda çalışma, kapalı alanda çalışma gibi özel çevresel montaj koşullarının olduğu durumlarda PGR'ye danışınız.

3. Giriş gücü ve servis faktörü
Her bir uygulama için gerekli olan giriş gücü, hesaplama ile belirlenir. Motor anma gücü (P1), bu giriş gücünden sonra seçilir. Motor anma gücü istenilen güç değerinden biraz daha yüksektir. Bunun sebebi çalışma koşullarının standart dışı özel olabilmesidir.

Montajı yapılacak 3 fazlı bir AC motorunun anma gücünü seçerken kısa aralıklı seyrek tork tesirini hesaplamaya gerek yoktur. İlave faktörler belirli bir frekans invertöründe çalışan 3 fazlı bir AC motor için anma gücünün seçimini etkiler. Dişli ünitesinin seçimini AC motorun aksine kısa aralıklı seyrek tork tesirleri etkiler. Dişli ünitesinin yük sınıfı belirlenirken bu kısa aralıklı seyrek tork tesirleri göz önünde bulundurulmalıdır. Redüktör servis faktörü fB bunu ve redüktör üzerindeki diğer etkileri yeterli doğrulukta hesaba katar.

5. Sayfadaki diyagram 1 günlük çalışma süresi, yük sınıflandırması, saatteki start-stop sayısı ile servis faktörü arasındaki ilişkiyi göstermektedir.

EN TECHNICAL INFORMATION

If the two or more of below items are valid, the specific operational condition of the reducer should be checked. Please kindly contact with PGR.

·If the ambient temerature is above 40°
·If the rotation speed n1 is over 1500 min-1
·If the motor power P1 is 100 kW and above
·If there is W, IEC ve PAM adaptor connected gearbox
·In case of vertical mounting preferred (M2 – M4)
·The ratio itop < 20 (For bevel gears itop < 40)

Please kindly consult to PGR, in case of work in heat radiation-intensive area, work in narrow space, work in confined space to be prevented and worked healtier gearboxes.

3.Input power and service factor
For every application, the requiring input power should be calculated. Motor rated power (P1) should be selected after choosing input power. The motor rated power is slightly higher than the desired power value. The reason for this situation is working conditions are non-standart, they are special

It is not necessary to calculate the short-range rare torque effect when choosing the rated power of a 3-phase AC motor to be montaged. Additional factors affect the choice of rated power for a 3-phase AC motor operating in a particular frequency inverter. Unlike the AC motor, short-range infrequent torque effects affect t he choice of gear unit. These short-range infrequent torque effects should be taken into account when determining the load class of the gear unit. The gear unit service factor fB takes this and other effects on the gear unit into account with sufficient accuracy.

Diagram 1 which is shown on page 5, presents relation between types of load, revolution per hour and minimum service factor depend on operation hours or day.

DE TECHNISCHE INFORMATION

Wenn zwei oder mehr der folgenden Punkte zutreffen, sollte der spezifische Betriebszustand des Getriebes überprüft werden. Wir empfehlen Ihnen, sich an PGR zu wenden.

·Wenn die Umgebungstemperatur mehr als 40 °C beträgt
·Wenn die Drehzahl n1 über 1500 min-1 . liegt
·Wenn die Motorleistung P1 100 kW und mehr beträgt
·Bei W-, IEC- und PAM-Adapter angeschlossenem Getriebe
·Bei vertikaler Montage (M2 – M4)
·Bindungsverhältnis itop < 20 (itop < 40 für Kegelräder)

Wenden Sie sich an PGR in Fällen, in denen besondere Umgebungsbedingungen für die Montage herrschen, wie z. B. Arbeiten in einem wärmestrahlungsintensiven Bereich, Arbeiten in einem engen Bereich, Arbeiten in einem geschlossenen Bereich, zum Schutz und zum gesunden Betrieb des Getriebes.

3. Eingangsleistung und Servicefaktor
Die für jede Anwendung benötigte Eingangsleistung wird rechnerisch ermittelt. Die Motornennleistung (P1) wird nach dieser Eingangsleistung gewählt.
Die Motornennleistung könnte etwas höher sein als der gewünschte Leistungswert. Dies liegt daran, dass die Arbeitsbedingungen vom Standard abweichen können.

Bei der Auswahl der Nennleistung eines zu installierenden 3-Phasen-Wechselstrommotors muss der kurzzeitige seltene Drehmomenteffekt nicht berechnet werden. Zusätzliche Faktoren beeinflussen die Wahl der Nennleistung für einen 3-Phasen-Wechselstrommotor, der in einem bestimmten Frequenzumrichter betrieben wird. Im Gegensatz zum Wechselstrommotor beeinflussen seltene Drehmoment-effekte im Nahbereich die Wahl des Getriebes. Diese kurzreichweitigen seltenen Drehmomenteffekte sollten bei der Bestimmung der Belastungsklasse des Getriebes berücksichtigt werden. Der Getriebebetriebsfaktor fB berücksichtigt diese und weitere Auswirkungen auf das Getriebe mit ausreichender Genauigkeit

Das Diagramm auf Seite 5 zeigt den Zusammenhang zwischen 1-Tages-Betriebszeit, Lastklassifizierung, Anzahl Starts-Stopps pro Stunde und Betriebsfaktor.

TR SERVİS FAKTÖRÜ

Diyagram 1 günlük çalışma zamanına (saat), saatteki start sayısına ve uygulanılan yük tipi sınıflandırmasına “U”, “M”, “H” göre gerekli servis faktörünü gösterir. Çalışma düzgünlüğüne ve kütle hız faktörüne (maf) bağlı olarak, üç yük sınıflandırması belirlenmiştir. Hareket ettirilen mekanizmaya gelen dış etkiler çalışma düzgünlüğü sınıflamasını tanımlarken kütlesel ivme faktörüne bağlı olarak 3 farklı yük sınıflandırması belirlenir. Diagram 1 kullanılarak belirlenen servis faktörü, motorlu seçim tablolarında verilen servis faktörüne eşit ya da küçük olmalıdır.

Not : Elde edilen servis faktörü fB kullanılan sürücü (tahrik) tipine göre “k” katsayısı ile çarpılır.

k = 1 ; elektrik motoru veya hidromotor,
k = 1.25 ; çok silindirli içten yanmalı motor,
k = 1.50 ; tek silindirli içten yanmalı motor

EN SERVICE FACTOR

The diagram 1 shows the required service factor according to daily working time (hours), revolution per hours, and the applied load type “U”,”M”, “H”. Three load classifications are determined, and they are depending on the working regularity and the mass acceleration factor(maf). While the external effects on the driven mechanism define the working smoothness classification, 3 different load classifications are determined depending on the mass acceleration factor. Service factor which is determined by using Diagram 1 must be less than or equal to the service factor given in the motor selection tables.

Note : Service factor fB which is obtained, should be multiplied with factor “k” which depends on drive type.

k = 1 ; hydraulic motor and electrical motor
k = 1.25 ; multi-cylinder engine
k = 1.50 ; single-cylinder engine

DE SERVICEFAKTOR

Das Diagramm zeigt den erforderlichen Betriebsfaktor entsprechend der 1-Tages-Betriebszeit (Stunden), der Anzahl der Starts pro Stunde und der angewendeten Lastartenklassifizierung “U”, “M”, “H”. Auf Basis der Laufruhe und des Massengeschwindigkeitsfaktors (maf) wurden drei Belastungsklassen ermittelt. Während die äußeren Einwirkungen auf den angetriebenen Mechanismus die Laufruheklasse bestimmen, werden in Abhängigkeit vom Massenbeschleunigungsfaktor 3 verschiedene Lastklassen bestimmt. Der nach Diagramm 1 ermittelte Betriebsfaktor muss kleiner oder gleich dem in den Motorauswahltabellen angegebenen Betriebsfaktor sein.

Hinweis: Der resultierende Betriebsfaktor fB wird mit dem Koeffizienten “k” entsprechend der verwendeten Antriebsart (Antrieb) multipliziert.

k = 1 ; Elektromotor oder Hydromotor
k = 1,25 ; Mehrzylinder-Verbrennungsmotor
k = 1,50 ; Einzylinder-Verbrennungsmotor

Diyagram / Diagram / Diagramm - 1

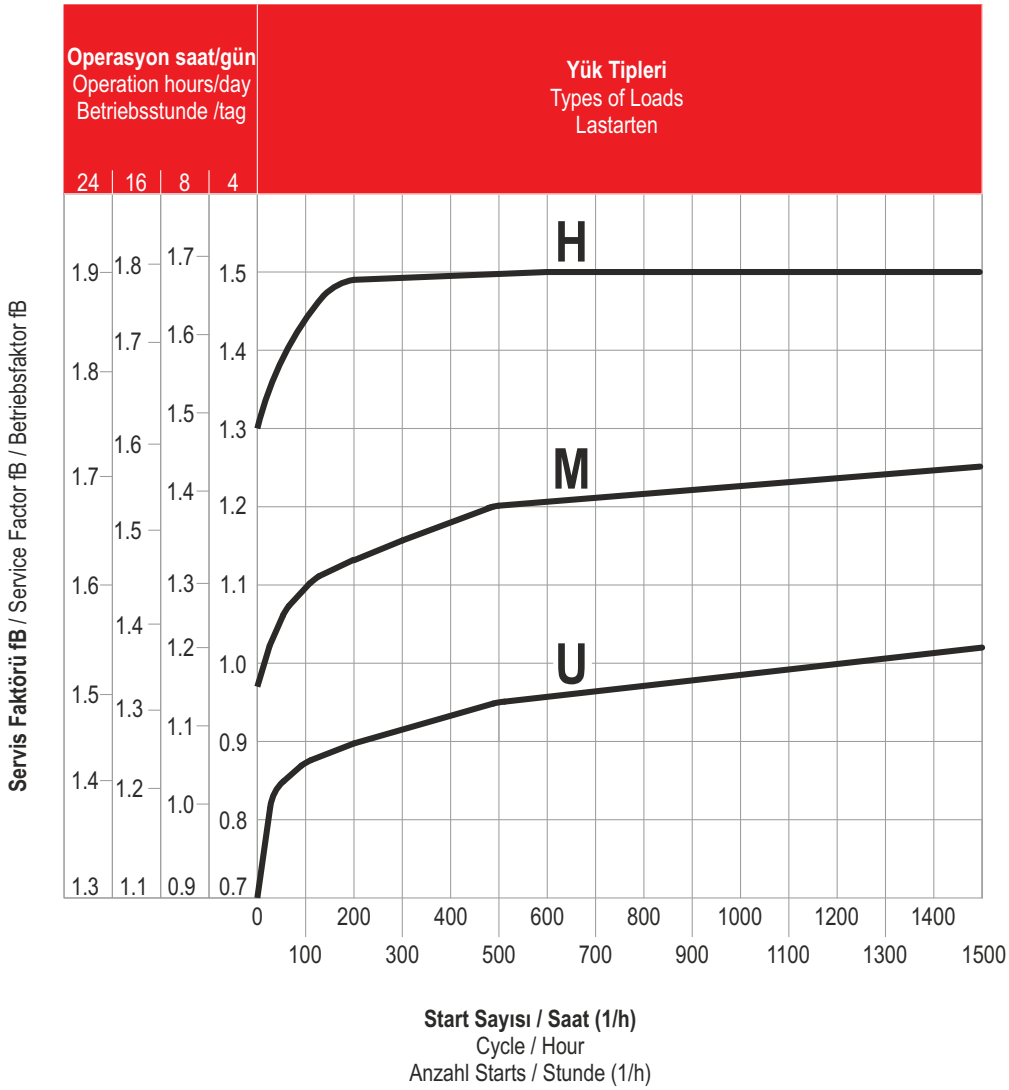

TR TEKNİK BİLGİLER

Yük Sınıfının Belirlenmesi:

U) Düzgün çalışma
Küçük karıştırıcılar, asansörler, konveyörler, montaj bantları, doldurma makinaları, bantlı konveyörler, temizleme makinaları, fanlar, test makinaları, santrifüj pompalar (ince sıvı pompalar).

M) Yumuşak şoklar, düzgün olmayan çalışma
Ağır yük konveyör bantları, değirmenler, ahır gübre makinaları, vinç hareket mekanizmaları, bükme makinaları, çimento karıştırıcılar, ahşap işleme makinaları için tahrik mekaniz maları, vinçler, kayar kapılar, balans makinaları, paketleme makinaları, dişli pompalar, santrifüj pompalar (yarı sıvı pompalar), vana döndürme dişlileri, dokuma tezgahları, hallaç makinaları, harman makinaları, taneleme (debegat) tekneleri, kolenderler, agidatörler, kurutma merdaneleri.

H) Ağır şoklar, aşırı düzgün olmayan çalışma
Taş kırıcılar, eksantrik presler, doğrayıcılar, presler, taşlama milleri, çekiçli kırıcılar, kağıt öğütücüler, ağır yük karıştırıcılar, delme makinaları, katlama makinaları, dönen tezgahlar, yatay karıştırıcılar, kesiciler, vibratörler, santrifüj makinaları, döner tablalar, ağır yük vinç ve asansörler, plaka-silindir-soğuk haddeleme makinaları, hız ayarlı sabit silindirler, kağıt hamur makinaları, kurutma silindirleri, perdahlama silindirleri.

Yük sınıfı (çalışma düzgünlüğü) aşağıdaki tabloya göre kütle hız faktörü (maf) den belirlenir. Eğer çalışma düzgünlüğü ile hesap ettiğimiz maf birbirleriyle uyumlu değilse (Örneğin: yumuşak geçişli düzgün olmayan çalışma koşulu ve maf:0,2 için gerekli yük sınıfımız "M" olmalıdır ya da düzgün çalışma koşulu ve maf : 0,28 için gerekli yük sınıfımız yine M olmalıdır.) daha ağır çalışma sınıfı gurubuna giren geçerlidir.

EN TECHNICAL INFORMATION

Determination of Load Class:

U) Regular operation
Small agitator, elevators, conveyors, mounting belt, filling machines, belt conveyors, cleaning machines, fans, testing machines, centrifugal pumps (fine liquid pumps).

M) Modarate shocks, non-uniform application
Heavy conveyor belts, mills, barn manure machine, crane motion mechanisms, bending machines, cement mixer, driving gear mechanisms for wood processing machines, cranes, sliding door, balacing machines, packaging machines, gear pumps, centrifugal pumps, valve turning gears, weaving looms, carding-machines, treshing machines, granulation vats, corrianders, agitators, drying rollers.

H) Heavy shocks, non-uniform application
Stone crushers, eccentric press machines, choppers, press machines, gridingmills, hammmer mills, shredders, heavy mixers, boring machines, folding machines, turning looms, horizontal mixers, cutters, vibrators, centrifugal machines, heavy cranes and elevators, plate-cyclinder-cold extrusion machines, fixed cyclinder with regulated velocity, sluch machines, drying cyclinders, polishing cyclinders,

The load classification is determined from the mass velocity factor (maf) according to the below table. If the working regularity and the mass acceleration factor we calculated are not compatible with each other (For example: our required load class should be "M" for moderate shocks, non-uniform application and maf:0.2, or our required load class for regular application and maf: 0.28 is still M. It should be valid), the heavier running classification is valid.

DE TECHNISCHE INFORMATION

Bestimmung der Belastungsklasse:

U) gleichmäßiger Betrieb
Kleinmischer, Elevatoren, Förderer, Montagebänder, Abfüllmaschinen, Bandförderer, Reinigungsmaschinen, Ventilatoren, Prüfmaschinen, Kreiselpumpen (Feinflüssigkeitspumpen).

M) Weiche Stöße, ungleichmäßiger Betrieb
Schwerlastförderbänder, Mühlen, Stallmistmaschinen, Kranantriebe, Biegemaschinen, Betonmischer, Antriebe für Holzbearbeitungsmaschinen, Kräne, Schiebetüren, Auswuchtmaschinen, Verpackungsmaschinen, Zahnradpumpen, Kreiselpumpen (Halbflüssigkeitspumpen), Ventildrehvorrichtungen, Webstühle, Putzereimaschinen, Dreschmaschinen, Granulier-(Debegat-) Behälter, Siebe, Rührwerke, Trockenwalzen.

H) Starke Stöße, stark ungleichmäßiger Betrieb
Steinbrecher, Exzenterpressen, Häcksler, Pressen, Mahlspindeln, Hammerbrecher, Aktenvernichter, Hochleistungsmischer, Stanzmaschinen, Abkantmaschinen, Rundtische, Horizontalmischer, Schneidgeräte, Vibratoren Zentrifugen, Rundtische, Schwerlastkräne und Aufzüge, Plattenzylinder - Kaltwalzmaschinen, geschwindigkeitsregulierbare Festwalzen, Auflösemaschinen, Trockenwalzen, Kalanderwalzen.

Klassifizierung der Gleichmäßigkeit des Betriebes:
Der Stoßgrad ergibt sich aus der Gleichmäßigkeit des Betriebes und aus dem Massenbeschleunigungsfaktor 'maf' gemäß der folgenden Tabelle. Hierbei gilt jeweils der größere Stoßgrad aus Betrieb und Massenbeschleunigungsfaktor. (Beispiel: ungleichmäßiger Betrieb und maf = 0,2 ergibt Stoßgrad "M".)

Yük Sınıfı Load Classification Stoßgrad	Çalışma Operation Betrieb	Kütle hız faktörü Mass Acceleration Factor Massenbeschleunigungs-faktor
U	Düzgün çalışma / Uniform application / gleichmäßiger Betrieb	$m_{af} \leq 0.25$
M	Düzgün olmayan çalışma / Non-uniform application / ungleichmäßiger Betrieb	$0.25 < m_{af} \leq 3$
H	Aşırı düzgün olmayan çalışma / Extreme non-uniform application / stark ungleichmäßiger Betrieb	$3 < m_{af} \leq 10$

$$m_{af} = \frac{J_{ex.red}}{J_{mot}} = \frac{J_{ex}}{J_{mot}} \times \left(\frac{1}{i_{ges}}\right)^2$$

i_{ges} = Tahvil oranı
$J_{ex.red}$ = Tahrik motoru üzerindeki azaltılmış dış kütle atalet momentleri toplamı
J_{ex} = Dış kütle atalet momentleri toplamı
J_{mot} = Motorun kütle atalet momenti toplamı

Kütlesel ivme faktörü maf, çıkış tarafındaki dış kütleler ile giriş tarafındaki yüksek hızlı kütlelerin arasındaki ilişkiyi gösterir.
Kütlesel ivme faktörünün dişli ünitesinin tork tesir seviyesine önemli ölçüde sistem başlatma, frenleme ve titreşim üzerinden etkisi vardır.
Örneğin bir bantlı konveyör sistemini ele alalım. Burada dış kütle atalet momentini konveyör bant üzerinde taşınan malzemenin kütlesel yükü oluşturur. Eğer maf >10 ise transfer elemanlarında büyük deplasman (yük değiştirme) var ise ya da yük sınıflandırmamızda bir belirsizlik var ise PGR'ye danışınız. Bu ve benzeri hususlarla belirli şüpheleriniz var ise PGR'ye danışınız.

i_{ges} = Total gear unit ratio
$J_{ex.red}$ = All external mass moment of inertia on the drive motor, reduced
J_{ex} = All external mass moment of inertia
J_{mot} = Mass moment of inertia of the motors

The mass acceleration factor (maf) shows the relationship between the outer masses on the output side and the high speed masses on the input side.
The mass acceleration factor has an important effect on the torque effect level of the gear unit through system starting, braking and vibration
Take, for example, a belt conveyor system. Here, the mass load of the material carried on the conveyor belt creates the external mass moment of inertia. If maf is >10, there is a large displacement (load change) in the transfer elements or if there is an uncertainty in our load classification, consult PGR. If you have certain doubts about these and similar issues, consult PGR.

i_{ges} = Getriebeübersetzung
$J_{ex.red}$ = alle externen Massenträgheitsmomente auf Antriebsmotor reduziert
J_{ex} = alle externen Massenträgheitsmomente
J_{mot} = Massenträgheitsmoment des Motors

Der Massenbeschleunigungsfaktor maf stellt das Verhältnis von externen abtriebsseitigen und schnelllaufenden antriebsseitigen Massen dar. Der Massenbeschleunigungsfaktor hat wesentlichen Einfluss auf die Höhe der Drehmomentstöße im Getriebe bei Anlauf- und Bremsvorgängen und Schwingungen. Die externen Massenträgheitsmomente beinhalten auch die Last wie z.B. das Fördergut und Transportbändern. Bei maf >10 bei großem Spiel in Übertragungselementen, Schwingungen im System, bei Unklarheiten zum Stoßgrad oder in Zweifelsfällen bitten wir Sie um Rücksprache mit PGR.

TR TEKNİK BİLGİLER

Redüktörümüzün servis faktörü fB'dir. Redüktörümüz için geçerli maksimum çıkış momenti Mamax'dır. Motor gücümüz P1'dir. Redüktör çıkış devrimiz n2'dir. Redüktörümüzün operasyonel çıkış momenti M2'dir.

Sistemimiz mekanik bir sistem olduğu için sistem ünitemizde kayıplarımız mevcuttur. Giriş gücümüz %100 kayıpsız olarak çıkışa iletilemez. Bu sebeple yüzde cinsinden verimliliği göz önünde bulundurmakta ve bunu hesaplarımızdaki formüllere eklemekteyiz. Redüktör verimliliği: η'dir

EN TECHNICAL INFORMATION

Fb is the service factor of our gear unit. Mamax is maximum output moment of our gear unit. P1 is the motor power. Gear unit output rotation is n2. M2 is the operational output moment.

Since our system is a mechanical system, we have losses in our system unit. Our input power cannot be transmitted to the output as 100% lossless. For this reason, we consider the efficiency in percent and add it to the formulas in our calculations. Gear unit efficiency: η

DE TECHNISCHE INFORMATION

Der Betriebsfaktor des Getriebes (fb). Das gültige maximale Abtriebsdrehmoment für Getriebe (Mamax.) Motorleistung (P1) Abtriebsdrehzahl (n2) Abtriebsdrehmoment (M2)

Da unser System ein mechanisches System ist, haben wir Verluste in unserer Systemeinheit. Unsere Eingangsleistung kann nicht 100% verlustfrei auf den Ausgang übertragen werden. Aus diesem Grund betrachten wir den Wirkungsgrad in Prozent und fügen ihn in unseren Berechnungen zu den Formeln hinzu.Getriebewirkungsgrad: η

$$M_2 = \frac{9550.\ P1.\ \eta}{n_2} \quad [Nm] \qquad P1\ [kW],\ n_2\ [min^{-1}]$$

$$f_B = \frac{M_{amax}}{M_2}$$

$$P_1 = \frac{M_2\ .\ n_2}{9550}.\eta\ [kW] \qquad M_2\ [Nm],\ n_2\ [min^{-1}]$$

Redüktörümüzün doğru seçimi, motorlu seçim tablolarımızda mevcut olan fB Servis faktörü değerinin Diyagram 1'den bulduğumuz minimum servis faktörümüz fBmin değerlerinden büyük veya eşit olması durumunda mümkündür.

Selection of gear unit is correctly done if service factor which is taken from selection of gear motors table must be greater than or equal to minimum service factor fB min which is taken from diagram-1

Die richtige Auswahl unseres Getriebes ist möglich, wenn der in unseren Motorauswahltabellen verfügbare Wert fB Servicefaktor größer oder gleich unserem minimalen Servicefaktor fBmin ist, den wir aus Diagramm 1 gefunden haben.

$$f_B \geq f_{B\,min}$$

Helisel dişlili redüktörler, Paralel şaft montajlı redüktörler ve Helisel konik dişlili redüktörler her bir kademede çok yüksek verime sahiptir (kademe başına yaklaşık %96 - %98 veya η= 0,96 - 0,98). Bu yüzden hesaplamalarda verim η =1,0 alınması yeterli ve doğru sonuçlara ulaşılmasına yardımcı olur. Helisel sonsuz dişlili redüktörlerin verimliliği (η), her bir çıkış hızı (n2) için oranlar W, IEC, PAM Seçim tablolarında belirtilmiştir. W kovanı montajlı (serbest hareket mili) redüktörde çıkış gücü aşağıdaki formülden hesaplanır.

Helical gear reducers has higher efficiencies than Parallel shaft mounted gear units and Helical bevel gear reducers. (approx. 96% - 98% per step or η= 0.96 - 0.98). Therefore, taking efficiency η = 1.0 in calculations helps to achieve sufficient and correct results. For efficiency (η) of helical worm gear units,the ratio of each output speed (n2) are specified in the W, IEC, PAM selection tables. Output power is calculated from the below formula for the W (free input shaft) gear unit.

Stirnradgetriebe, Flachgetriebe und Kegelradgetriebe haben einen sehr hohen Wirkungsgrad (ca. 96% - 98% je Getriebestufe oder η= 0,96 - 0,98). Daher führt der vereinfachte Getriebewirkungsgrad η = 1,0 in der Regel zu hinreichend und korrekte Ergebnissen. Bei Stirnradschneckengetrieben ist der Getriebewirkungsgrad (η) der Schneckengetriebe in den Leistungs- und Übersetzungstabellen (W,IEC,PAM) für die jeweilige Abtriebsdrehzahl (n2) aufgeführt. Bei Getrieben mit freier Antriebswelle Typ W darf die installierte Antriebsleistung P1 höchstens betragen:

$$P_1 = \frac{M_{amax}.\ n_2}{9550.\ f_{Bmin}}.\eta\ [kW] \qquad M_{amax}\ [Nm],\ n_2\ [min^{-1}]$$

Redüktörümüzün güvenli ve verimli bir şekilde çalışması için maksimum tahrik gücü P1max'ın aşılmaması gerekir.

For the safe and efficient operation of our gearbox, the maximum drive power P1max must not be exceeded.

Hierbei darf die maximale Antriebsleistung P1max nicht überschritten werden.

$$P_1 \leq P_{1max}$$

W, IEC, PAM bağlantılı redüktörler için W, IEC, PAM seçim tablolarında her bir çıkış devri (n2) ve maksimum çıkış momenti (Mamax) için P1max değerleri tablo halinde listelenmiştir.

Tahrik tarafına fren bağlanmış (Örn:frenli motorlar) redüktörlerin seçimi yapılırken fren momenti de göz önüne alınmalıdır. Dış kütle atalet momentinin yüksek olduğu (maf>2) uygulamalarda (örn; çember dişlilerde, döner tablalarda, karıştırıcılarda, yüzey havalandırıcılarında veya kapı sistemlerinin tahriklerinde) fren torkunun nominal anma momentinin 1,2 katından büyük olmaması, bu değerin aşılmaması tavsiye edilir. Belirtilen değerleden daha yüksek fren torku kullanılacak ise bu durum redüktör seçimi yapılırken göz önünde bulundurulmalıdır. Lütfen istenmeyen durumları engellemek için PGR'ye başvurunuz.

For gear units with W, IEC, PAM connection, P1max values for each output speed (n2) and maximum output torque (Mamax) are listed in the W, IEC, PAM selection tables.

The braking torque must also be taken into account when selecting gear units with brakes on the drive side (eg brake motors). In applications in which the external mass moment of inertia is high (maf>2) (e.g. ring gears, rotary trays, mixers, surface aerators or drives of door systems), it is recommended that the braking torque should not be greater than 1.2 times the rated torque, so it can not exceed this value. If specified value is higher than braking torque, this should be taken into account while selecting the gear unit. Please contact PGR to prevent undesirable situations.

P1 ≤ P1max Die Leistungs- und Übersetzungstabellen (W, IEC, PAM) führen die jeweiligen Abtriebsdrehzahl n2 das maximale Getriebeabtriebsdrehmoment Mamax und die maximale Motorleistung P1max auf.
Bei angebauten antriebsseitigen Bremsen, wie z.B. bei Bremsmotoren ist bei der Getriebeauswahl auch das Bremsmoment zu beachten. Bei Anwendungen mit relativ hohen externen Massenträgheitsmomenten (maf<2) wie z.B. häufig bei Fahrantrieben, Drehwerken, Drehtischen, Torantrieben, Rührwerken und Oberflächenbelüftern wird empfohlen, ein Bremsmoment zu wählen, dass nicht größer als das 1,2-fache Motornennmoment ist. Wenn höhere Bremsmomente zum Einsatz kommen sollen, ist dies bei der Getriebeauswahl zu berücksichtigen. Wir bitten dann um Ihre Anfrage.

TR TEKNİK BİLGİLER

Radyal ve Eksenel Kuvvetler
Motorlu seçim tablolarında, çıkış mili üzerine müsaade edilebilir radyal kuvvetler (FR) ve eksenel kuvvetler (FA) ile listelenmiştir. Opsiyonel olarak birçok redüktör tipimizde güçlendirilmiş çıkış mili yataklarımız mevcuttur.
Motorlu seçim tablolarında güçlendirilmiş yataklara etki eden radyal kuvvetler (FRGR) ve eksenel kuvvetler (FAGR) olarak değerleri belirtilmiştir. Tablolarda belirtilen radyal ve eksenel kuvvetler, ayak montajlı ve flanş montajlı dişli ünitelerinin dolu mil çıkışlı montajları için geçerlidir. Verilen bu eksenel ve radyal kuvvetlerin aynı anda çıkış miline etkilememesi koşuluna dayanmaktadır.

Ayrıca motorlu seçim tablolarında yer alan radyal ve eksenel kuvvet değerleri sistemin servis faktörünün (fB=1) bire eşit olduğu durum için verilmiştir. Darbeli yükler, darbeli tekrarlı yükler, uzun süreli çalışmalı (>8 saat/gün) gibi uygulamalarda servis faktörünün (fB>1) birden büyük olduğu duruma karşılık gelen radyal ve eksenel kuvvetler dikkate alınmalıdır. İzin verilen FA ve FR kuvvetleri buna göre azaltılır.

Motorlu seçim tablolarında verilen radyal ve eksenel kuvvet değerleri milin orta noktasına etkiyen bir kuvveti ifade eder. İzin verilen radyal ve eksenel kuvvetler belirlenirken uygulanan kuvvetin uygulama istikameti ve dönüş yönünün en elverişsiz olması durumu varsayılmıştır.

Daha yüksek radyal ve eksenel kuvvetler potansiyel olarak kuvvet yönünün uygulama doğrultusuna ve dönüş yönüne göre mümkündür. Kesin bir hesaplama için bu tip uygulamalar söz konusu ise operasyonel kuvvet yönünü, dönüş yönünü ayrıca istenilen servis süresini (gerekli olan) detaylı olarak PGR'ye iletiniz.

Çıkış miline ilave transfer elemanı takılırsa, mile etkiyen radyal kuvvetin belirlenmesinde aşağıdaki tablodan bulunacak olan fz faktörü de dikkate alınmalıdır.

fz için Tablo

Transfer Elemanları	Faktör fz	Açıklama
Dişliler	1.1	z ≤ 17 diş
Zincir Dişliler	1.4	z ≤ 13 diş
Zincir Dişliler	1.2	z ≤ 20 diş
Dar V-Kayış Kasnakları	1.7	ön gerilim
Düz kayış Kasnakları	2.5	kuvveti
Dişli Kayış Kasnakları	1.5	

Kuvvet uygulama noktası :
Kuvvet uygulama noktası aşağıdaki şekillere göre tanımlanır.

EN TECHNICAL INFORMATION

Radial and Axial Forces
In the motor selection tables, allowable radial forces (FR) and axial forces (FA) for over output shaft are listed. Optionally, we have reinforced output shaft bearings in many gearbox types.
They are given as a radial forces (FRGR) and axial forces (FAGR) acting on the reinforced bearings in the motor selection tables.The radial and axial forces indicated in the tables are valid for solid shaft output mountings of foot-mounted and flange-mounted gear units. This is valid on the condition that axial and radial forces do not affect the output shaft at the same time.

In addition, the radial and axial force values in the selection tables with motor are valid for the case where the service factor of the system (fB=1) is equal to one. In applications such as shock loads, pulsed repetitive loads, long-term operation (>8 hours/day), you should take into account radial and axial forces corresponding to the case where the service factor (fB>1) is greater than one. The allowable FA and FR forces are reduced accordingly.
The radial and axial force values which is given in the motor selection tables represent a force acting on the midpoint of the shaft. While determining the allowable radial and axial forces,we assumed the application direction of the applied force and the most unfavorable rotation direction.

Higher radial and axial forces are potentially possible with respect to the direction of application and the direction of rotation of the force direction. For an exact calculation, if such applications are in calculation, please inform PGR in detail the operational force direction, the direction of rotation, and the required service time (required).

If an additional transfer element is attached to the output shaft, the fz factor from the table below should also be taken into account in determining the radial force acting on the shaft.

fz values are shown at table

Transfer Elements	Factor fz	Explanation
Gears	1.1	z ≤ 17 teeth
Chain Sprockets	1.4	z ≤ 13 teeth
Chain Sprockets	1.2	z ≤ 20 teeth
Narrow V-belt pulleys	1.7	by
Flat belt pulleys	2.5	pretension force
Gear belt pulleys	1.5	

Definition of force application point:
The point of force application is defined according to the following figure.

DE TECHNISCHE INFORMATION

Quer- und Axialkräfte
In den Tabellen der Leistungs-und Drehzahlübersichten sind die zulässigen Querkräfte (FR) und Axialkräfte (FA) die auf den äußeren Zapfen der Abtriebswelle wirken dürfen aufgeführt.
Für vielen Getriebetypen sind optional verstärkte Abtriebswellenlager lieferbar. Die Werte der auf die verstärkten Lager wirkenden Querkräfte (FRGR) und Axialkräfte (FAGR) sind in den Motorauswahltabellen angegeben. Die in den Tabellen angegebenen Quer- und Axialkräfte gelten für Fuß- und Flanschgetrieben mit Vollwelle. Die Kraftangaben beziehen sich auf den Fall, dass Quer- und Axialkraft nicht gleichzeitig vorliegen.
Außerdem liegt den Kraftangaben in den Tabellen der Leistungs- und Drehzahlübersicht ein Betriebsfaktor für Quer- und Axialkräfte (fB=1) zugrunde. Bei stoßartigen Kräften und längeren Laufzeiten > 8 Stunden/Tag) ist auch für die Quer- und Axialkräfte ein entsprechender Betriebsfaktor (fB>1) zu berücksichtigen. Die zulässigen Querkräfte FA- und FR- werden entsprechend reduziert.

Die Querkraftangaben beziehen sich auf Kraftangriff in der Mitte des Wellenendes. Bei der Ermittlung der zulässigen Quer- und Axialkräfte wurde die ungünstigste Kraftangriffsrichtung und Drehrichtung angenommen.

Höhere Quer- und Axialkräfte sind eventuell möglich. Wenn solche Anwendungen in Frage kommen, teilen Sie PGR bitte detailliert für eine genaue Berechnung, die Angaben der tatsächlichen Kraft- und Drehrichtung sowie der erforderlichen Lebensdauer mit.

Werden auf der Abtriebswelle Übertragungselemente aufgesetzt, so ist bei der Ermittlung der auftretenden Querkraft ein entsprechender Faktor (fz) zu beachten.

Querkraft-Faktor fz

Übertragungselemente	Faktor fz	Hinweise
Zahnräder	1.1	z ≤ 17 Zähne
Kettenräder	1.4	z ≤ 13 Zähne
Kettenräder	1.2	z ≤ 20 Zähne
Schmalkeilriebenscheiben	1.7	durch
Flachriemenscheiben	2.5	Vorspannkraft
Zahnriemenscheiben	1.5	

Definition des Kraftangriffs
Der Kraftangriff wind gemäß dem folgenden Bild definiert

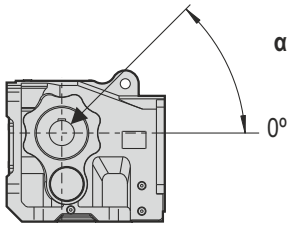

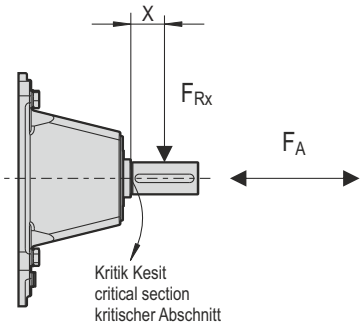

F_{Rx} : "X" Uygulama noktasındaki müsaade edilen radyal kuvvet [N]
F_A : Müsaade edilen eksenel kuvvet [N]

F_{Rx} : Permitted overhung load at point [N]
F_A : Permitted axial force [N]

F_{Rx} : zulässige Querkraft bei Abstand [N]
F_A : zulässige Axialkraft [N]

TR TEKNİK BİLGİLER

Mil üzerinde ortaya çıkan radyal kuvvet, aşağıdaki formül kullanılarak hesaplanmıştır.

M_2 : Redüktör çıkış momenti [Nm]
f_Z : Tablodaki radyal kuvvet faktörü
d_0 : Etkin daire çapı [mm]
F_R : Seçim tablolarından alınan müsaade edilebilir radyal kuvvet [kN]
$F_{R\ vorth}$: Mil üzerindeki radyal kuvvet [kN]

Eğer kuvvet mil ortasına uygulanmazsa kuvvetin etki ettiği herhangi bir "x" noktasındaki müsaade edilen radyal kuvvet değeri aşağıdaki formül 1 ve formül 2 kullanılarak hesaplanır.

X : mil faturasından (kritik kesitinden) kuvvet uygulama noktasına olan uzaklık [mm]
F_{RXW} : x noktasına etkiyen müsaade edilebilir radyal kuvvet (Mil dayanımına göre)
F_R : Motorlu seçim tablolarından gelen milin ortasına etkiyen radyal kuvvet [kN]
F_{RXL} : x noktasına etkiyen müsaade edilebilir radyal kuvvet (yataklama, rulman servis ömrüne göre)
z,y,f : Radyal yük dönüşümü için dişli ünitesi sabitleri
c : Radyal yük dönüşümü için dişli ünitesi sabiti

Burada hesaplamalarda formül 1'in yatak servis ömrüyle formül 2'nin mil dayanımıyla bağlantılı olduğu unutulmamalıdır. Yatak servis ömrüyle alakalı hesaplamalarda formül 1'den gelen sonuç, mil dayanımı ile alakalı hesaplamalarda formül 2'den gelen sonuç kullanılmalıdır.

EN TECHNICAL INFORMATION

The radial force on the shaft was calculated using the formula below.

$$F_{Rvorth} = \frac{2 \cdot M_a}{d_o} f_z \leq F_R$$

M_2 : Output torque of gear unit [Nm]
f_Z : Factor which is taken from table
d_0 : Effective circular diameter [mm]
F_R : Permitted radial force which is taken from the speed and output moment tables. [kN]
$F_{R\ vorth}$: Radial force on the gear unit shaft [kN]

Formula 1 and formula 2 is used when force is not acting on the middle of shaft, by this way you can calculate permissible radial force value at any "x" point where the force acts

Formül / Formula / Gleichung - I

$$F_{RXL} = F_R \cdot \frac{z}{y + x}$$

Formül / Formula / Gleichung - II

$$F_{RXW} = \frac{c}{(f + x) \cdot 1000}$$

X : distance from the shaft collar to the point of force application [mm]
F_{RXW} : permitted overhung force point X - shaft stability
F_R : overhung force from the speed and output tables, force applied at the middle of the shaft [kN] point X - bearing service life
F_{RXL} : permitted radial force acting on point X (according to bearing service life)
z,y,f : Gear unit constants for radial load conversion
c : Gear unit constant for radial load conversion

c		[Nmm]
C_{GR}		[Nmm]
f	10-13	[mm]
y		[mm]
z		[mm]

It should be noted here that in calculations, formula 1 is related to service life and formula 2 is related to shaft stability. The result from formula 1 should be used in calculations related to service life, and the result from formula 2 should be used in calculations related to shaft stability.

DE TECHNISCHE INFORMATION

Die auftretende Querkraft an der Getriebewelle wird wie folgt bestimmt:

M_2 : (Nm) Abtriebsmoment des Getriebes
f_Z : Querkraft-Faktor aus Tabelle
d_0 : (mm) Wirkkreisdurchmesser
F_R : (kN) zulässige Querkraft nach Drehzahl und Leistungstabellen
$F_{R\ vorth}$: (kN) vorhandene Querkraft an der Getriebewelle

İst der Kraftangriff nicht auf Wellenmitte, so kann die zulässige Querkraft mit Hilfe der Gleichungen 1 und 2 auf jede bliebige Stelle "x" umgerechnet werden.

X : Abstand von Wellenbund bis Kraftangriff (mm)
F_{RXW} : zul. Querkraft an Stelle x Wellenfestigkeit
F_R : Querkraft aus Drehzahl- und Leistungstabelle, Kraftangriff auf Wellenmitte (kN)
F_{RXL} : zul. Querkraft an Stelle x Lagerlebensdauer
z,y,f : Faktoren siehe Tabelle
c : Faktoren siehe Tabelle

Hierbei ist zu beachten, dass grundsätzlich nach Gleichung 1 (Lebensdauer) und Gleichung 2 (Wellenfestigkeit) gerechnet wird, wobei der kleinere Wert als zulässig anzugeben ist.

TR RADYAL YÜK HESABI

EN CALCULATION OF RADIAL LOADS

DE BERECHNUNG VON QUERKRAFT

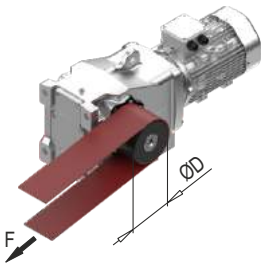

RADYAL YÜKLERİN HESABI

Radyal yük F(N)' nun hesaplanmasında gerekli tahrik momenti M (Nm), kasnak veya dişli çapı D (mm) olmak üzere aşağıdaki formüller kullanılır.

CALCULATION OF OVERHUNG LOADS

Radial load F (N) is calculated with the following formulas where required moment M (Nm) and hoop or gear diameter D (mm) is used.

BERECHNUNG VON QUERKRAFT

Radiallast F (N) Berechnung erforderlich Antriebsmoment M (Nm), Durchmesser der Riemenscheibe oder des Gewindes D (mm) die folgenden Formeln es wird verwendet.

1 - Elastik Kaplin

Çalışma sırasında oluşan sapmalar kaplinin güvenlik sınırları içerisinde ise kuvvetler ihmal edilebilir.

1 - Elastik Coupling

If elastic coupling is working in its reliable working area, the overhung loads can be neglected.

1 - Elastische Kupplung

Abweichungen im Betrieb gewährleisten die Sicherheit der Kupplung. Kräfte können vernachlässigt werden.

2 - Düz Dişli (20° kavrama açılı)

2 - For Spur Gear (Pressure angle 20°)

2 - Stirnrad (20° Kupplungswinkel)

$$F_R = \frac{2100 \times M_2}{D}$$

3 - Küçük Hızlarda Zincir Dişli (Z < 17)

3 - For Chain Drive With Low Speed (Z < 17)

3 - Kettenrad bei kleinen Geschwindigkeiten (Z < 17)

$$F_R = \frac{2100 \times M_2}{D}$$

4 - Triger Kayış

4 - For Trigger Belt

4 - Zahnriemen

$$F_R = \frac{2500 \times M_2}{D}$$

5 - V Kayış

5 - For V Belt

5 - Keilriemen

$$F_R = \frac{5000 \times M_2}{D}$$

6 - Gerdirme Makaralı Kayış

6 - Flat Belt With Spanning Puley

6 - Spannrollenriemen

$$F_R = \frac{5000 \times M_2}{D}$$

TR RADYAL YÜK HESABI | EN CALCULATION OF RADIAL LOADS | DE BERECHNUNG VON QUERKRAFT

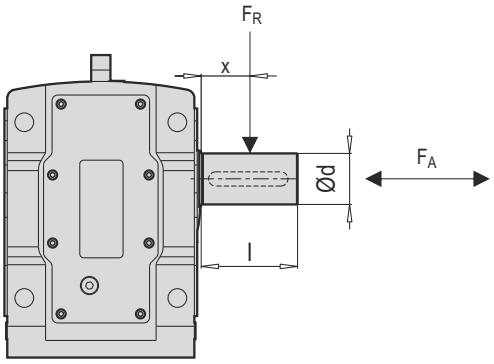

ÇIKIŞ ŞAFTINDAKİ RADYAL VE EKSENEL YÜK HESAPLAMALARI İÇİN DEĞERLER
VALUE TABLE FOR RADIAL AND AXIAL LOADS AT OUTPUT SHAFT
WERTE FÜR QUER UND AXIALKRAFT AN DER AUSGANGSWELLE

Redüktör Tipi Gearbox Type Reduzierertyp	y (mm)	z (mm)	c **Normal** Normal (Nmm)	C_{GR} **Güçlendirilmiş /** Reinforced / Verstärkt (Nmm)	f (mm)	d (mm)	l (mm)
PKD A 0290	95.0	115.0	0.06×10^6	–	0	20	40
PKD B 0290	111.0	131.0	0.05×10^6	–	0	20	40
PKD C 1290	128.0	153.0	0.08×10^6	–	0	25	50
PKD F 4290	136.0	166.0	0.12×10^6	–	0	30	60
PKD H 5290	153.0	188.0	0.16×10^6	–	0	35	70
PKD 1390 - PKD 1490	111.0	141.0	0.14×10^6	0.24×10^6	0	30	60
PKD G 1390 - PKD G 1490	111.0	146.0	0.25×10^6	0.41×10^6	0	35	70
PKD 2390 - PKD 2490	144.0	179.0	0.17×10^6	0.30×10	0	35	70
PKD 3390 - PKD 3490	171.5	216.5	0.29×10^6	0.58×10^6	0	45	90
PKD 4390 - PKD 4490	181.0	241.0	1.22×10^6	1.99×10^6	0	60	120
PKD 5390 - PKD 5490	237.0	307.0	1.75×10^6	3.08×10^6	0	70	140
PKD 6390	281.0	366.0	4.49×10^6	7.05×10^6	0	90	170
PKD 7390	281.0	366.0	4.49×10^6	7.05×10^6	0	90	170
PKD 8390	326.7	431.7	8.36×10^6	12.82×10^6	0	110	210
PKD G 8390	422.0	527.0	9.56×10^6	15.60×10^6	0	120	210
PKD 9390	515.0	640.0	14.40×10^6	24.61×10^6		140	250
PKD G 9390	550.0	710.0	48.73×10^6	–		140	320

y - z - c - C_{GR} - f 9

TR RADYAL YÜK HESABI | EN CALCULATION OF RADIAL LOADS | DE BERECHNUNG VON QUERKRAFT

- W ADAPTÖR

- W ADAPTER

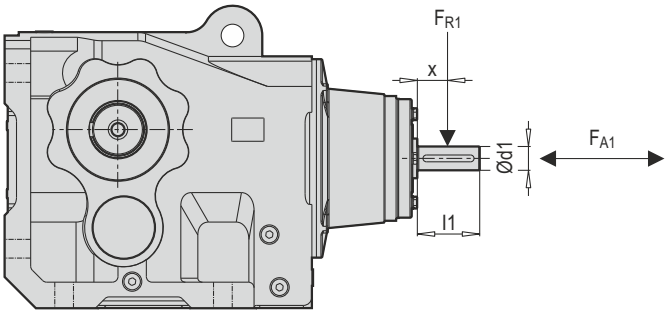

GİRİŞ ŞAFTINDAKİ RADYAL VE EKSENEL YÜK HESAPLAMALARI İÇİN DEĞERLER VALUE TABLE FOR RADIAL AND AXIAL LOADS AT INPUT SHAFT WERTE FÜR QUER UND AXIALKRAFT AN DER EINGANGSWELLE					f=0
Redüktör Tipi Gearbox Type Reduzierertyp	**y** **(mm)**	**z** **(mm)**	**c** **(Nmm)**	**d1** **(mm)**	**l1** **(mm)**
PKD A 0290 **PKD B 0290**	58.5	78.5	0.027×10^6	14	40
PKD C 1290	58.5	78.5	0.037×10^6	16	40
PKD F 4290	59.5	79.5	0.032×10^6	19	40
PKD H 5290	69.0	94.0	0.109×10^6	24	50
PKD 1390 **PKD G 1390** **PKD 1490** **PKD G 1490** **PKD 2390** **PKD 2490** **PKD 3490**	70.0	90.0	3.64×10^4	16	40
PKD 3390 **PKD 4490** **PKD 5490**	96.5	121.5	1.07×10^5	24	50
PKD 4390 **PKD 5390**	110.5	150.5	4.70×10^5	38	80
PKD 6390 **PKD 7390**	149.5	204.5	4.60×10^5	42	110
PKD 8390 **PKD G 8390** **PKD 9390**	207.5	277.5	1.82×10^6	65	140
PKD G 9390	299.0	369.0	–	70	140

y - z - c 9

TR RADYAL YÜK HESABI

EN CALCULATION OF RADIAL LOADS

DE BERECHNUNG VON QUERKRAFT

- W ADAPTÖR

- W ADAPTER

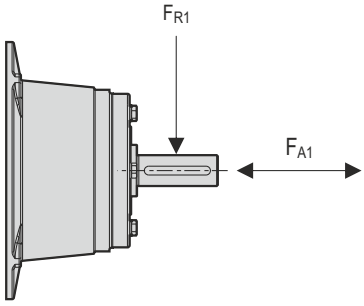

Tip Type Typ	PKD A 0290 PKD B 0290		PKD C 1290		PKD F 4290		PKD H 5290		PKD 1390 PKD G 1390 PKD 2390 PKD 1490 PKD G 1490 PKD 2490 PKD 3490		PKD 3390 PKD 4490 PKD 5490		PKD 4390 PKD 5390		PKD 6390 PKD 7390		PKD 8390 PKD G 8390 PKD 9390 PKD G 9390	
	[kN]	[kN]	[kN]	[kN]	[kN]	[kN]	[kN]	[kN]	[kN]	[kN]	[kN]	[kN]	[kN]	[kN]	[kN]	[kN]	[kN]	[kN]
P_1 (kW)	F_{A1}	F_{R1}	F_{A1}	F_{R1}	F_{A1}	F_{R1}	F_{A1}	F_{R1}	F_{A1}	F_{R1}	F_{A1}	F_{R1}	F_{A1}	F_{R1}	F_{A1}	F_{R1}	F_{A1}	F_{R1}
0.12	1.2	0.55	1.2	0.85	2.9	2.13	3.7	2.3	1.2	0.85	2.9	2.1	-	-	-	-	-	-
0.18	1.1	0.54	1.1	0.82	2.9	2.1	3.5	2.2	1.1	0.82	2.9	2.1	-	-	-	-	-	-
0.25	1.0	0.53	1.0	0.78	2.8	2.1	3.2	2.1	1.0	0.78	2.8	2.1	-	-	-	-	-	-
0.37	0.89	0.50	0.89	0.75	2.6	2.1	3.1	2.1	0.89	0.75	2.6	2.1	4.1	2.1	-	-	-	-
0.55	0.77	0.47	0.77	0.72	2.5	2.0	3.0	2.2	0.77	0.72	2.5	2.0	3.9	2.8	-	-	-	-
0.75	0.58	0.44	0.58	0.70	2.3	1.9	2.8	2.0	0.58	0.70	2.3	1.9	3.8	2.4	6.1	4.4	-	-
1.10	0.35	0.37	0.35	0.61	2.1	1.8	2.6	1.9	0.35	0.61	2.1	1.8	3.5	2.7	5.9	4.3	-	-
1.50	0.29	0.30	0.29	0.43	2.0	1.8	2.4	1.9	0.29	0.43	2.0	1.8	3.3	2.6	5.8	4.2	-	-
2.20	-	-	0.20	0.42	1.7	1.7	2.2	1.8	0.20	0.42	1.7	1.7	2.7	2.4	5.5	4.1	-	-
3.00	-	-	0.15	0.23	1.5	1.6	2.0	1.8	0.15	0.23	1.5	1.6	2.5	2.3	5.2	3.9	4.3	11.0
4.00	-	-	-	-	0.98	1.1	1.9	1.6	-	-	0.98	1.1	2.3	2.1	4.9	3.7	4.2	10.9
5.50	-	-	-	-	0.66	1.0	1.8	1.5	-	-	0.65	1.0	1.6	1.8	4.4	3.4	4.1	10.8
7.50	-	-	-	-	0.45	1.0	1.5	1.3	-	-	0.27	1.0	1.4	1.3	4.3	3.4	3.8	10.4
9.20	-	-	-	-	0.28	0.74	1.1	1.0	-	-	-	-	1.0	0.98	3.9	3.1	3.6	10.1
11.0	-	-	-	-	-	-	-	-	-	-	-	-	0.59	0.47	3.3	2.7	3.4	9.9
15.0	-	-	-	-	-	-	-	-	-	-	-	-	-	-	3.3	2.7	3.1	9.5
18.5	-	-	-	-	-	-	-	-	-	-	-	-	-	-	2.7	2.3	3.0	9.3
22.0	-	-	-	-	-	-	-	-	-	-	-	-	-	-	2.2	1.8	2.9	9.3
30.0	-	-	-	-	-	-	-	-	-	-	-	-	-	-	1.1	1.2	2.3	8.4
37.0	-	-	-	-	-	-	-	-	-	-	-	-	-	-	0.74	0.87	2.0	8.1
45.0	-	-	-	-	-	-	-	-	-	-	-	-	-	-	-	-	2.2	8.3
55.0	-	-	-	-	-	-	-	-	-	-	-	-	-	-	-	-	1.5	7.4
75.0	-	-	-	-	-	-	-	-	-	-	-	-	-	-	-	-	0.78	4.6
90.0	-	-	-	-	-	-	-	-	-	-	-	-	-	-	-	-	0.24	5.2
110	-	-	-	-	-	-	-	-	-	-	-	-	-	-	-	-	-	-
132	-	-	-	-	-	-	-	-	-	-	-	-	-	-	-	-	-	-
160	-	-	-	-	-	-	-	-	-	-	-	-	-	-	-	-	-	-

$F_{A1} \rightarrow F_{A1} = 0$

$F_{R1} \rightarrow F_{R1} = 0$

9

PGR DRIVE TECHNOLOGIES

TR KISALTMALAR

f_B	= Servis Faktörü (Mamax / Ma)
F_A	= Çıkış tarafındaki müsaade edilebilir eksenel yük [kN]
F_R	= Çıkış tarafındaki, milin orta noktasına etkiyen müsaade edilebilir radyal yük [kN]
F_D	= Reaksiyon yükü [kN]
i_{toplam}	= Dişli ünitesindeki toplam tahvil oranı
i_{ges}	= Tahvil oranı
M_2	= Çıkış momenti [Nm]
M_{amax}	= Müsaade edilebilir maksimum çıkış momenti [Nm]
n_2	= Çıkış devri [d/dk]
P_e	= Mamax referans alınarak hesaplanan güç [kW]
P_n	= Motor güç oranı [kW]
η	= Verim [%]
kg	= Redüktörün ağırlığı

1) 4 ve 5 kademeli redüktörlerin 0,75 kW' a kadar olan 4 kutuplu motorlarında kayıp yaklaşık 40 W olarak hesaplanmıştır. Kayıp, motor hızına bağlı olarak o oranda değişir.

EN ABBREVIATIONS

f_B	= Service factor (Mamax / Ma)
F_A	= Permissible axial load at the output side [kN]
F_R	= Permissible overhung load at the output side, force acting at the shaft's midpoint [kN]
F_D	= Reaction [kN]
i_{total}	= Gear units total ratio
i_{ges}	= Reduction ratio
M_2	= Output torque [Nm]
M_{amax}	= Max. permissible output torque [Nm]
n_2	= Output speed [min^{-1}]
P_e	= Calculated power [kW] with reference to Mamax
P_n	= Rated power of motor [kW]
η	= Efficiency [%]
kg	= Weight of the geared motor

1) Gear units or gear motors which have 4 and 5 stage reduction 4 pole motor up to 0,75 kW losses are calculated nearly 40 W, losses are dependent motor speed.

DE ABKÜRZUNGEN

f_B	= Betriebsfaktor (Mamax / Ma)
F_A	= zulässige axiale Belastung auf der Abtriebsseite [kN]
F_R	= Querkraft aus Drehzahl- Leistungstabellen, Kraftangriff auf Wellenmitte[kN]
F_D	= Reaktionsbelastung [kN]
i_{total}	= Gesamtübersetzungsverhältnis
i_{ges}	= Übersetzungsverhältnis
M_2	= Abtriebsdrehmoment [Nm]
M_{amax}	= zul. Maximale Drehmoment [Nm]
n_2	= Abtriebsdrehzahl [min^{-1}]
P_e	= Mit der Referenz Mamax berechnete Leistung [kW]
P_n	= Motorleistung [kW]
η	= Leistung [%]
kg	= Gewicht des Getriebes

1) Bei vier-, fünfstufigen Getrieben gibt es aufgrund der vielen sich drehenden Teile und der relativ kleinen Antriebsleistungen relevanten Leerlaufverluste. Daher wird hier bei 4-poligen Motoren bis 0,75 kW eine Leerlaufverlustleistung von ca. 40 Watt (W) in den Tabellen berücksichtigt.

TR PKD TANITIMI

HELİSEL KONİK DİŞLİ REDÜKTÖRLER (PKD)

Polat Group Redüktör ürünü olan Polat Konik Dişlili (PKD) serisi 17 farklı gövde büyüklüğü ile hizmete sunulmaktadır. Redüktörler;
-PKD A 0290...H 5290 arası 2 kademeli,
-PKD 1390...5390 arası 3 kademeli redüktörlere indirgeyici gövde montajlanarak 4 kademeli (PKD 1490...5490)
-PKD 6390...G 9390arası gövdeler ise sadece 3 kademeli olarak sunulmaktadır.
-Yüksek tahvil oranları için 5 ve 6 kademeli redüktörlerimiz de mevcuttur.

Her bir gövde büyüklüğümüz için gövdeden ve ayaktan montaj opsiyonlarımız mevcuttur. PKD serisi redüktörlerimiz giriş devrini istenilen oranda düşüren dişli üniteleridir. Ayrıca bünyesindeki konik dişli yapısı ile giriş motor mili ve çıkış mili arasında 90° lik (dik) aktarım sağlar.

Yeni nesil PGR dişli ünitelerimiz UNICASE ilkesine göre geliştirilmiştir. Redüktörlerimiz bu prensibe göre yekpare olarak tasarlanmıştır. Yekpare gövdemiz tüm rulmanların entegre edildiği tek bir muhafazadır. Yekpare gövdemizin son ölçülerine getirilmesi güncel ve son teknoloji CNC ünitelerimizde gerçekleştirilir. Unicase konsepti en yüksek düzeyde hassasiyet, rijitlik ve dayanıklılık sağlar. Eksenel kuvvetlere ve torka maruz kalabilen redüktör gövdemizin üzerinde ayrı bağlantı elemanı yoktur. Unicase prensibi şaft eksenlerinin kademeli olmasına izin verir, bu da daha uzun bir çalışma ömrünü garanti etmek için daha büyük yataklama elemanı (rulman) kullanma olanağı sunar. Unicase prensibinin getirdiği hassas mil (şaft) hizalaması ve yüksek yükleme kapasitesi, uzun hizmet ömrü ve düşük gürültü sağlar. Dişliler, yataklar, miller DIN 3990 DIN ISO 281 uluslararası normlara göre hesaplanmıştır. Çıkış tarafı ile giriş arasında eksen kaçıklığına neden olabilecek çıkıntı veya tork yüklerine maruz kalan herhangi bir bağlantı elemanı (vida vb) yoktur. Pik / sfero veya alüminyum gövdeler için gövdeden sağlanan montaj kolaylığı ile vibrasyon salınım etkisi en aza indirilir.
Kullanıcı isteğine göre opsiyonel olarak her iki yönden sağlanan çıkış; her bir dişli kademesi için ayrı olarak 0,96…0,98 arasında yüksek bir verimlilikle (her bir kademenin bağımsız olarak verimliliği bu değerler arasındadır) dişli ünitelerimizce sunulmaktadır.

Fabrikamızda bulunan son sistem CNC tezgahlarında açılan dişliler yüksek ve geniş yelpazeli imalat toleransı ile günümüz uluslararası standartlarının tamamını karşılamaktadır. Redüktör gövdelerimiz GG 25-30, GGG 50-60 ya da alüminyum yapılmıştır.

Yataklar ve dişliler tribolojinin kurallarına göre optimize edilmiş bir yağ banyosunda çalışır.
Dişli ünitelerimizin sızdırmazlığında NBR keçe kullanılır. Opsiyonel olarak viton (FKM) keçe kullanımımız da mevcuttur. Dövme malzemeden yapılan dişlilerimiz gerekli ısıl işlem, sementasyon, honlama, gibi proseslerden geçirilerek redüktörümüzün sorunsuz çalışması sağlanır. Dişli dizaynındaki doğru oluşturulan geometri ve doğru malzeme seçimi, çalışan dişlilerimizin daha sessiz, daha hafif ve daha yüksek hızlarda daha fazla yük taşırken daha az ısı üretmesini mümkün kılmaktadır. Redüktörlerimiz sessiz, yüksek dayanımlı ve servis ömrü uzun çalışma sağlamaktadır. Bu da zorlu çalışma koşullarında güvenli çalışmayı beraberinde getirir. PKD serisi redüktörlerimiz her türlü endüstriyel uygulamada kullanılabilmektedir.

EN DESCRIPTION OF PKD

HELICAL BEVEL GEARED MOTOR (PKD)

Polat Bevel Gear (PKD) series, a product of PGR, have 17 different body sizes.
Gear Units;
-Gear units from PKD A 0290 to H 5290 is 2 stage.
-Gear units from PKD 1390 to 5390 is 3 stage. These gear, units will be quadruble reduction by using reduction gear. (PKD 1490...5490)
-Gear units represented as only 3 stage from PKD 6390 to PKD 9390.
-We have 5 stage and 6 stage gearboxes for higher reduction ratios.
We have case and foot mounting options for each of our body sizes. Our PKD series are gear units reduce the input speed at the intended rate. In addition, it provides 90° (vertical) transmission between the input motor shaft and the output shaft with its bevel gear structure.

Our new generation PGR gear units have been developed according to the UNICASE principle. Our gear units are designed as a one-piece according to this principle. Our one-piece body is a single housing in which all bearings are integrated. Bringing our one-piece body to its final dimensions is carried out in our updated technology CNC units. The Unicase concept provides the highest level of precision, rigidity and durability. We do not have different connection element on our gear unit body, which can be exposed to axial forces and torque. The Unicase principle allows the shaft axes to have stages, which offers the possibility to use larger bearings (bearings) to guarantee a longer durability. The precise shaft alignment and high loading capacity which is provided by Unicase principle ensure durability and low noise. Gears, bearings, shafts are calculated according to DIN 3990 DIN ISO 281 international norms. There are no connector (screws, etc.) that are exposed to protrusion or torque loads that may cause axial misalignment between the output side and the input side. Vibration oscillation effect is minimized with the ease of mount provided from the body for ductile iron or aluminum bodies. Output provided from both sides optionally according to the user's request is offered by our gear units with a high efficiency of 0.96…0.98 for each gear stage separately (the efficiency of each stage independently is between these values).

The gears produced on the cutting-edge technology system CNC machines in our factory encounter provides all today's international standards with high and wide range with manufacturing tolerances. Our gear unit bodies are made of GG 25-30, GGG 50-60 or aluminum.

Bearings and gears work in an optimized oil bath according to the rules of tribology.
NBR seal is used in the leekproofing of our gear units. We have viton seal (FKM) as optional. Our gear units, which are made of forged material, are passed through the necessary processes such as heat treatment, cementation, honing. After that, our gear units is ensured working without problem. Correctly created geometry and correct material selection in gear design make it possible for our working gears to be quiet, lighter and they can generate less heat while carrying more loads at higher velocity. Our gear units provide quiet working and durability. This situation brings safe working in hard working conditions. Our PKD series gear units can be used in all kinds of industrial applications.

DE PKD-EINFÜHRUNG

KEGELSTİRNRADGETRİEBE (PKD)

Ein Produkt der Polat Group Kegelradgetriebe (PKD)-Serie, wird mit 17 verschiedenen Gehäusegrößen angeboten. Getriebegehäuse;
- PKD A 0290 bis H 5290 2-stufig
- Bis zu PKD 1390 ... 5390 3-stufigen Kegelradgetriebe können durch die Montage des Reduktionskörpers auf 4 Stufen erhöht werden (PKD 1490 ... 5490).
-Körper bis PKD 6390...G 9390 sind nur in 3 Stufen lieferbar.
-Wir haben auch 5- und 6-stufige Getriebe für hohe Übersetzungsverhältnisse.

Wir haben Körper- und Fußbefestigungsoptionen für jede unserer Körpergrößen. Unsere Getriebe der Baureihe PKD sind Getriebe, die die Eingangsdrehzahl im gewünschten Maße reduzieren. Darüber hinaus bietet es mit seiner Kegelradstruktur eine 90° (vertikale) Übertragung zwischen der Antriebsmotorwelle und der Abtriebswelle.
Unsere PGR-Getriebe der neuen Generation wurden nach dem UNICASE-Prinzip entwickelt. Unsere Reduzierstücke werden nach diesem Prinzip als Einzelstück konstruiert. Unser solider Körper ist ein einziges Gehäuse, in dem alle Lager integriert sind. In unseren aktuellen und hochmodernen CNC-Anlagen wird unser Massivkörper auf Endmaß gebracht. Das Unicase-Konzept bietet ein Höchstmaß an Präzision, Festigkeit und Wiederstandsfähigkeit. An unserem Reduzierkörper befindet sich kein separates Verbindungselement, das axialen Kräften und Drehmomenten ausgesetzt werden kann. Durch das Unicase-Prinzip können die Wellenachsen versetzt werden, was die Möglichkeit bietet, größere Lager zu verwenden, um eine längere Lebensdauer zu gewährleisten. Präzise Wellenausrichtung und hohe Belastbarkeit durch das Unicase-Prinzip sorgen für lange Lebensdauer und geringe Geräuschentwicklung. Zahnräder, Lager, Wellen werden nach den internationalen Normen DIN 3990 DIN ISO 281 berechnet. Es gibt keine Befestigungselemente (Schrauben usw.) zwischen der Abtriebsseite und dem Eingang, die Überstands- oder Drehmomentbelastungen ausgesetzt sind, die eine axiale Fehlausrichtung verursachen könnten. Der Schwingungseffekt wird durch die einfache Montage des Gehäuses für Guss-/Sphäroguss- oder Aluminiumkörper minimiert.
Ausgang aus beiden Richtungen wahlweise nach Wunsch des Benutzers; wird von unseren Getrieben mit einem hohen Wirkungsgrad zwischen 0,96…0,98 für jede Getriebestufe separat angeboten. (der Wirkungsgrad jeder Stufe liegt unabhängig zwischen diesen Werten).

Die in unserem Werk auf modernsten System - CNC-Maschinen geöffneten Verzahnungen erfüllen alle heutigen internationalen Standards mit hohen und weiten Fertigungstoleranzen. Unsere Reduzierkörper werden aus GG 25-30, GGG 50-60 oder Aluminium gefertigt.

Lager und Getriebe arbeiten in einem optimierten Ölbad nach den Regeln der Tribologie. Zur Abdichtung unserer Getriebe wird NBR-Filz verwendet. Optional ist auch Viton (FKM)-Filz erhältlich. Unsere Zahnräder aus geschmiedetem Material durchlaufen die notwendigen Prozesse wie Wärmebehandlung, Zementieren, Honen und sorgen für einen reibungslosen Betrieb unseres Getriebes. Eine richtig erstellte Geometrie und die richtige Materialauswahl in der Zahnradkonstruktion machen es möglich, dass unsere Zahnräder leiser, leichter und weniger Wärme erzeugen und gleichzeitig mehr Lasten bei höheren Geschwindigkeiten tragen. Unsere Getriebe zeichnen sich durch leiser Betrieb, hoche Festigkeit und lange Lebensdauer aus. Dies bringt sicheres Arbeiten unter schwierigen Arbeitsbedingungen mit sich. Unsere Getriebe der Baureihe PKD können in allen Arten von Industrieanwendungen eingesetzt werden.

TR PKD TANITIMI

Motorlu ya da motorsuz seçeneklerde, W kovanlı, PAM ve IEC adaptörlü giriş opsiyonlu olarak ürettiğimiz helisel konik dişlili redüktörlerde standart olarak sunduğumuz çıkış opsiyonlarımız;

·Delik milli
·Çıkış milli
·Konik sıktırma delik milli

Aksesuarlarımız,
·Tork kollu / Tork kolu platformlu
·B5 / B14 flanşlı
·Çektirmeli
·Konik sıkırmalı
·Kilitli
·Koruma kapaklı

Helisel Konik Dişlili Redüktörler;
0.12 kW dan 200 kW'ya kadar değişen güçleri ile maksimum 65000 Nm'ye kadar çıkış momenti sağlayabilmektedir.

EN DESCRIPTION OF PKD

The output options we offer as standard in the helical bevel gear reducers that we produce with W (free input shaft), PAM and IEC adapter input options, with or without motor options are as follows.

·Hollow Shaft
·Solid Shaft
·Hollow Shaft, With Shrink disc

Accessories,
·Torque arm/ Torque arm platform
·B5/B14 flange
·Fixing
·Shrink disc
·With backstop
·Protection cover

Helical bevel gear units which has power from 0.12 kW to 200 kW provides Maximum 65000 Nm output moment.

DE PKD-EINFÜHRUNG

In Kegelradgetrieben, die wir mit W-Hülse, PAM- und IEC-Adapter-Eingangsoptionen herstellen, mit oder ohne Motoroptionen sind unsere Standardausgabeoptionen:

·Hohlwelle
·Abtriebswelle
·Schrumpscheibe, Hohlwelle

Unser Zubehör,
·Drehmomentstütze / Drehmomentstütze mit Plattform
·B5 / B14 geflanscht
·Mit Aufziehvorrichtung
·Schrumpfscheiben
·Mit Rücklaufsperre
·Mit Schutzabdeckung

Kegelradgetriebe;
Leistungsbereich von 0,12 kW – 200 kW, bis 65000 Nm

MAX. MÜSAADE EDİLEBİLİR ÇIKIŞ MOMENTİ $M_{a\ max.}$
MAX. PERMISSIBLE OUTPUT TORQUES $M_{a\ max.}$
MAX. ZULÄSSIGE AUSGANGSMOMENTE $M_{a\ max.}$

285 - 302

İki, Üç ve dört kademeli helisel konik dişlili redüktör
Double,triple, Quadruple reduction helical bevel gearboxes
Zwei-, drei- und vierstufiges Kegelstirnradgetriebe

Tip / Type / Typ	$M_{a\ max.}$ (Nm)	**Tip** / Type / Typ	$M_{a\ max.}$ (Nm)	**Tip** / Type / Typ	$M_{a\ max.}$ (Nm)	**Tip** / Type / Typ	$M_{a\ max.}$ (Nm)
PKD A 0290	90	**PKD 1390**	400	**PKD 1490**	400	**PKD 6390**	8200
PKD B 0290	120	**PKD G 1390**	610	**PKD G 1490**	610	**PKD 7390**	8500
PKD C 1290	230	**PKD 2390**	860	**PKD 2490**	860	**PKD 8390**	13000
PKD F 4290	380	**PKD 3390**	1550	**PKD 3490**	1550	**PKD G 8390**	20000
PKD H 5290	660	**PKD 4390**	2800	**PKD 4490**	2800	**PKD 9390**	32000
		PKD 5390	4800	**PKD 5490**	4800	**PKD G 9390**	50000

TR W, IEC VE PAM ADAPTÖRÜ

W kovanlı (serbest giriş milli) redüktörler için geçerli maksimum tahrik gücü, uygun tahvil oranı ve çıkış devrine göre (min-1) W, IEC, PAM seçim tablolarında belirlenmiştir. IEC'li ve PAM'lı redüktörlerde her bir gövde büyüklüğü için DIN EN 50347 standardına göre standart güçler verilir. Ancak maximum çıkış gücü, tahvil oranlarına göre tablolarda verilmiştir. Eğer W, IEC, PAM seçim tablolarındaki listelenen P1 güç değerlerinden daha fazla bir güç istenirse özel hesaplamalar gerekmektedir Bu durumda lütfen firmamıza danışınız.

W kovanlı redüktörlerin giriş mili yatakları (rulmanları) düzenli olarak yağlanmalıdır. PA/PF 62-63, PD/PM 62-63, PKD 6390 ve üst gövdeler için her 4000 çalışma saatine göre yaklaşık 20-25 gr gres ile otomatik yağlayıcılar ya da gresörlük kullanılarak giriş şaftı yatakları düzenli olarak yağlanmalıdır. Yağlayıcı olarak Petamo GHY 133N önerilir. W kovanlı redüktörlerde yağlamanın yanı sıra redüktörün soğutulmasını iyileştirmek için harici bir fan talep üzerine yapılabilir. Lütfen böyle bir istek için tarafımıza danışınız.
Otomatik yağlayıcı ünitesini IEC adaptör girişli redüktörlerimiz için PA/PF 62-63, PD/PM 62-63, PKD 6390 ve üstü gövde büyüklüklerine bağlanabilmektedir. Otomatik yağlama ünitesi giriş mili üzerindeki rulmanlara kalıcı bir yağlama sağlamaktadır. Redüktör devreye alınmadan önce otomatik yağlayıcı aktive edilmeli ve her 12 ay periyodunda değiştirilmelidir. Bu süre ortalama günlük çalışma süresinin ≤ 8 saat olduğu durumlarda geçerlidir. Günlük çalışma süresi 8 saatin üzerindeki tüm durumlarda otomatik yağlayıcı 6 ayda bir değiştirilmelidir.

Otomatik yağlayıcı içindeki gres 0ºC…40º arasındaki ortam sıcaklığında çalışmaya göre tasarlanmıştır. Eğer ortam sıcaklığı belirtilen standart değerlerden (0ºC…40º) çok uzun süre farklı kalıyorsa özel yağlayıcılar kullanılmalıdır. Bunun gibi durumlar için firmamıza danışınız.
Otomatik yağlayıcılı, motor gövde büyüklüğü 160 ve üzeri IEC adaptörlü redüktörlerde, motorun dikey olarak durduğu montaj pozisyonları tarafımızca önerilmez. Bu tarz durumlarda doğrudan motor montajı tavsiye edilir.
Eğer redüktör, motor gövde büyüklüğü 160 ve üzeri IEC adaptörlü ve dikey montaj pozisyonu (M4) kullanılması gerekiyorsa, gerçek çalışma koşulları ile tarafımızca kontrol edilmeli ve onaylanmalıdır.

Montaj pozisyonu M2 olduğu dikey çalışma koşullarında, redüktör üzerindeki bazı sızdırmazlık elemanlarının ömrü azalabilir. Bu gibi durumlarda bakım aralıklarının daha kısa olmasını öneriyoruz. PA/PF 52, PD/PM 52 PKD 5390'a kadar olan gövde büyüklüklüğündeki IEC adaptörlü redüktörlerimiz, çalışma ömürleri boyunca özel sızdırmazlığa sahip yağlanmış rulmanlar içerir. Bu rulmanların yağlanması için herhangi bir ilave yağlama ünitesine gerek duyulmaz. Bu gövdeler için önerilen bakım süreleri kullanım kılavuzunda belirtilmiştir.

Motor gövde büyüklüğü 63'den 180'e kadar olan IEC adaptörlerin kaplinleri arızaya karşı emniyetli değildir. Ancak motor gövde büyüklüğü 160 ve 180 olan IEC adaptörlerinin kaplinleri otomatik yağlayıcı kullanılıyor ise arızalara karşı emniyetlidir. Motor gövde büyüklüğü 200 olan IEC adaptörlerin kaplinlari arızalara karşı emniyetli değildir. Kaldırıcılar, asansörler ve yaralanmalar vs. gibi kazalara sebep olabilecek özel durumlar için özel önlemler ve özel hesaplamalar gerekebilir. Bu durumlar için PGR'ye danışınız.
Doğrudan monte edilen akuple motorla karşılaştırıldığında IEC adaptöründe ek bir şaft kaplini ve ek rulman yatakları bulunur. Doğrudan monte edilen akuple motorla karşılaştırıldığında IEC bağlantılı redüktörlerde yük kayıpları seviyesi çok daha yüksektir. Sadece teknik avantajlar değil ayrıca fiyat avantajı da sunduğu için PGR olarak akuple motor montajı önerilmektedir.

EN W, IEC AND PAM ADAPTER

For gear units with W cylinder(with free input shaft), the maximum drive power,proper ratio rate, and output speed (min-1) is given at W, IEC, PAM selection tables.In gear units with IEC and PAM, standard powers are given for each body size according to DIN EN 50347 standard. However, the maximum output power is given in the tables according to the reduction ratio. Special calculations are required if more power is required than the P1 power values which is listed in the W, IEC, PAM selection tables. In this case, please kindly consult our company.

Input shaft bearings of gear units with W cylinder (free input shaft) must be lubricated regularly. Input shaft bearings of PA/PF 62-63, PD/PM 62-63, PKD 6390 and upper cases should be lubricated regularly with 20-25 gr grease using automatic lubricators or a grease fitting for approximately per 4000 operation hours. Petamo GHY 133N is recommended as a lubricant. For gear units with W (free input shaft), an external fan is available on request to improve the cooling of the gear unit. Please consult us for such a request.
The automatic lubricator unit can be connected to with IEC adapter input cases of PA/PF 62-63, PD/PM 62-63, PKD 6390 and aupper cases. The automatic lubrication unit provides permanent lubrication to the bearings on the input shaft. Before the gear unit is used, the automatic lubricator must be activated and changed every 12 months. This period is valid when the average daily working time is ≤ 8 hours. In all cases with a daily operating time of more than 8 hours, the automatic lubricator have to be replaced every 6 months.
The grease which is in the automatic lubricator is designed for operation at ambient temperatures between 0°C…40°. If the ambient temperature differs from the specified standard values (0°C…40°) for too long time, special lubricants have to be used. For such cases, consult our company.
We do not recommend vertical mounting positions for gear units with automatic lubricator, motor body size 160 and above with IEC adapter. In such cases, direct motor mounting is recommended.
If motor body size 160 and above, with IEC adapter and vertical mounting position (M4) must be used, it have to be checked and approved by our company with the actual operating conditions.
In vertical operating conditions where the mounting position is M2, the life of some leakproofing elements on the gear unit may be reduced. In such cases, we recommend shorter maintenance time Our cases up to PA/PF 52, PD/PM 52 and PKD 5390 with IEC adapter contain bearings which is lubricated and these bearings have special leakproofing for their working life. Additional lubrication unit is not required for the lubrication of these bearings. Recommended maintenance times for these bodies are specified in the user manual.

Couplings of IEC adapters from motor frame sizes 63 to 180 are not fail-safe, they are not safe for faults. However, couplings of IEC adapters with motor body sizes 160 and 180 are fail-safe if automatic lubricator is used. Couplings of IEC adapters with motor body size 200 are not fail-safe. For situations which can lead to accidents like lifters, lifts and injuries etc , you should make special calculations and precautions. For such cases, consult our company. Compared to a directly mounted coupled motor, the IEC adapter has an additional shaft coupling and additional bearings. Compared to a directly mounted coupled motor, the level of load losses is much higher in gear units with IEC connection. Coupled engine installation is recommended as PGR, as it offers not only technical advantages but also price advantage.

DE W, IEC UND PAM ADAPTER

Bei Getrieben mit freier Antriebswelle, Typ W, gilt die in den Leistungs- und Übersetzungstabellen angegebene maximale Antriebsleistung. Bei Getrieben mit IEC-Anbau, gilt die Normleistung der jeweiligen Baugröße nach DIN EN 50347, maximale jedoch die in den Leistungs- und Übersetzungstabellen angegebene Antriebsleistung. Bei höheren Drehzahlen, als in den Leistungs- und Übersetzungstabellen angegeben, sind eventuell Sondermaßnahmen erforderlich, wir bitten um Anfrage.

Bei Getrieben mit freier Antriebswelle, Typ W, muss die Antriebswellenlagerung ab Größe PA/PF 62-63, PD/PM 62-63, PKD 6390 regelmäßig nachgeschmiert werden. Wir empfehlen, über den vorgesehenen Schmiernippel, das äußere Wälzlager der Antriebswelle ca. pro 4000 Betriebsstunden mit ca. 20-25 g Fett nachzuschmieren. Empfohlene Fettsorte: Petamo GHY 133N. Auf Wunsch ist auch ein Lüfter auf der Antriebswelle zu besseren Getriebekühlung lieferbar. Wir bitten um Anfrage.

Getriebe mit IEC-Adapter ab Größe PA/PF 62-63, PD/PM 62-63, PKD 6390 können standardmäßig einen automatischen Schmierstoffgeber, der das äßere Wälzlager der Antriebswelle mit Schmierstoff versorgt haben. Der Schmierstoffgeber fördert permanent Schmierstoff zum Lager. Vor Inbetriebnahme des Getriebes ist der automatische Schmierstoffgeber zu aktivieren und dann alle 12 Monate auszutauschen. Dies gilt für eine durchschnittliche Laufzeit ≤ 8 Stunden/Tag. Bei längeren Laufzeiten verkürzt sich der Wechselintervall auf 6 Monate.
Der Schmierstoffgeber ist ausgelegt für normalen Einsatz bei 0°C bis 40°C Umgebungstemperatur. Weicht die Umgebungstemperatur über längere Zeiträume von dem genannten Richtwert ab, sind Sonderschmierstoffgeber zu verwenden, wir bitten um Anfrage.

Der IEC-Adapter bei Motorgröße ≥ 160 mit dem automatischen Schmierstoffgeber ist unter bestimmten Betriebsbedingungen serienmäßig nicht geeignet für senkrechte Anordnungen, bei denen der Motor senkrecht nach oben steht. Hier ist unbedingt Direktanbau des Motors zu empfehlen!
Der senkrechte IEC-Adapter bei Motorbaugröße ≥ 160 (Einbaulage M4) muss durch PGR unter Bekanntgabe der Betriebsbedingungen geprüft und freigegeben werden. Wir bitten um Beachtung.
Bei senkrechten Anordnungen bei denen der Motor nach unten hängt (Einbaulage M2), kann sich die Lebensdauer der Abdichtung verringern. Hier empfehlen wir kürzere Wartungsintervalle. Die kleineren Getriebe mit IEC-Adapter bis PA/PF 52, PD/PM 52 PKD 5390 Getrieben haben speziell abgedichtete, lebensdauergeschmierte Lager, die keine Wartung benötigen.

Die Kupplung des IEC-Adapters für die Motorbaugrößen 63 bis 180 ist nicht durchschlagsicher. (Ausnahme: Bei den IEC Motorbaugrößen 160 und 180, wenn der automatische Schmierstoffgeber vorhanden ist. Ab IEC 200 sind die verwendeten Kupplungen durchschlagsicher). Bei Hubwerken, Aufzügen und anderen Einsatzfällen mit Personengefährdung sind Sondermaßnahmen erforderlich, hier bitten wir um Anfrage.
Der IEC-Adapter hat gegenüber dem Direktanbau des Motors eine zusätzliche Wellenkupplung und zusätzliche Lagerstellen. Hierdurch entstehen gegeüber dem Direktanbau, des Motors höhere Leerlaufverluste. Wir empfehlen den Direktanbau des Motors, da er nicht nur technische Vorteile, sondern auch zusätzlich noch Preisvorteile bietet.

TR UYGULAMA ALANLARI	EN APPLICATION AREAS	DE EİNSATZBEREİCHE

UYGULAMALAR	APPLICATIONS	ANWENDUNGEN
KARIŞTIRICILAR	AGITATORS (MIXERS)	MISCHER
* Saf Sıvılar	* Pure Liquids	* Reine Flüssigkeiten
* Sıvılar ve Katılar	* Liquids and Solids	* Flüssigkeiten und Feststoffe
* Değişken Yoğunluklu Sıvılar	* Liquids - Variable Density	* Flüssigkeiten mit variabler Dichte
HAVALANDIRMA TERTİBATLARI	BLOWERS	BELÜFTUNGSVORRICHTUNGEN
* Santrifüj	* Centrifugal	* Zentrifuge
* Lob	* Lobe	* Lob
* Pervane	* Vane	* Propeller
MAYALAMA VE DAMITMA	BREWING AND DISTILLING	GÄREN UND DESTILLIEREN
* Şişeleme Mekanizması	* Bottling Machinery	* Abfüllmechanismus
* Mayalama Kazanları - Kesintisiz İş	* Brew Kettles - Continuous Duty	* Gärkessel - Ununterbrochene Arbeit
* Fırınlar, Ocaklar - Kesintisiz İş	* Cookers - Continuous Duty	* Öfen, Herde - Ununterbrochener Betrieb
* Ezme, Karışım Kazanları - Kesintisiz İş	* Mash Tubs - Continuous Duty	* Zerkleinern, Mischkesseln - Ununterbrochenes Arbeiten
* Ölçü Haznesi - Sık Sık Başlama	* Scale Hopper - Frequent Starts	* Messbehälter - Häufiger Start
TOPRAK İŞLEME MAKİNELERİ	CLAY WORKING MACHINERY	BODENBEARBEITUNGSMASCHINEN
* Tuğla Presi	* Brick Press	* Ziegelpresse
* Briket Makinesi	* Briquette Machine	* Brikettmaschine
* Çamur Karma Makinesi	* Pug Mill	* Schlammmischer
KOMPRESÖRLER	COMPRESSORS	KOMPRESSOREN
* Santrifüj	* Centrifugal	* Zentrifuge
* Lob	* Lobe	* Lob
* Çok Pistonlu	* Reciprocating, Multi-Cylinder	* Mehrkolben
* Tek Pistonlu	* Reciprocating, Single-Cylinder	* Einzelkolben
KONVEYÖRLER - GENEL MAKSATLI	CONVEYORS - GENERAL PURPOSE	FÖRDERER - ALLGEMEINE ZWECKE
* Üniform Yüklü	* Uniformly Loaded or Fed	* Uniform geladen
* Üniform Yüklü Olmayan	* Not Uniformly fed	* Nicht einheitlich belastet
* Pistonlu veya Karıştırıcılı	* Reciprocating Or Shaker	* Mit Kolben oder Mischer
VİNÇLER	CRANES	KRÄNE
* Kuru Havuz	* Dry Dock	* Trockenbecken
Ana Kaldırma vinci	Main Hoist	Haupthebekran
Yardımcı Vinç	Auxiliary Hoist	Hilfskran
Direkli Vinç	Boom Hoist	Mastkran
Döndürme İşi	Slewing Drive	Rotationsarbeit
Çekme İşi	Traction Drive	Zieharbeit
* Endüstriyel İşi	* Industrial Duty	* Industrielle
Ana Kaldırma Vinci	Main Hoist	Haupthebewinde
ASANSÖRLER	ELEVATORS	AUFZÜGE
* Kova	* Bucket	* Eimer
* Santrifuj Boşaltma	* Centrifugal Discharge	* Zentrifugalentladung
* Yürüyen Merdiven	* Escalators	* Rolltreppe
* Taşıma, Nakliye	* Freight	* Abwicklung, Versand
* Yerçekimi Boşaltım	* Gravity Discharge	* Schwerkraftentladung
KIRMA MAKİNELERİ	CRUSHER	ZERKLEİNERUNGSMASCHINEN
* Taş ya da Maden	* Stone or Ore	* Stein oder Mine

TR UYGULAMA ALANLARI | EN APPLICATION AREAS | DE EİNSATZBEREİCHE

UYGULAMALAR	APPLICATIONS	ANWENDUNGEN
TARAMA MAKİNELERİ	DREDGES	SIEBMASCHINEN
* Kablo Bobinleri * Konveyörler * Pompalar * İstifleme Makineleri * Vinçler	* Cable Reels * Conveyors * Pumps * Stackers * Winches	* Kabelspulen * Förderer * Pumpen * Stapelmaschinen * Kräne
EKSTRUDERLER	EXTRUDERS	EXTRUDER
* Genel * Plastikler Değişken Hızlı Tahrik Sabit Hızlı Tahrik * Kauçuk, Lastik Kesintisiz Vida İşlemleri Kesintili Vida İşlemleri	* General * Plastics Variable Speed Drive Fixed Speed Drive *Rubber Continuous Screw Operation Intermittent Screw Operation	Allgemeines * Kunststoffe Antrieb mit variabler Geschwindigkeit Antrieb mit konstanter Geschwindigkeit *Gummi, Kautschuk Kontinuierlicher Schraubbetrieb Intermittierende Schrauboperationen
FANLAR	FANS	LÜFTER
* Santrifüj * Yüksek Emişli * İndüklenmiş Çekiş * Endüstriyel ve Maden Ocağı	* Centrifugal * Forced Draft * Induced Draft * Industrial and Mine	* Zentrifuge * Starke Saugleistung * Induzierte Traktion * Industrie und Bergbau
BESLEME ÜNİTELERİ	FEEDERS	FÜTTERUNGSMASCHİNEN
* Palet * Bant * Disk * Pistonlu * Vida	* Apron * Belt * Disc * Reciprocating * Screw	* Palette * Band * Scheibe * Kolben * Schrauben
GIDA ENDÜSTRİSİ	FOOD INDUSTRY	NAHRUNGSMITTELINDUSTRIE
* Hububat Fırını * Hamur Karıştırıcı * Kıyma Makinesi * Dilimleyici	* Cereal Cooker * Dough Mixer * Meat Grinder * Slicer	* Getreideofen * Knetmaschine * Fleischwolf * Schneidemaschine
METAL İŞLEMELERİ	METAL MILLS	METALL VERARBEITUNG
* Çekme Makinesi Taşıma ve Ana Tahrik * Hammadde İticileri * Makaslar * Tel Çekme * Tel Sargı Makinesi * Salgı Tezgahı Geri Dönmesiz Tek Tahrik Grup Tahriki	* Draw Bench Carriage and Main Drive * Slab Pushers * Shears * Wire Drawing * Wire Winding Machine * Runout Table Non-Reversing Individual Drives Group Drives	* Traktionsmaschinen-Förderung und Hauptantrieb * Rohstoffschieber * Schere * Drahtziehen * Drahtwickelmaschine * Sekretbank Einzelantrieb ohne Rückkehr Gruppenablage
DÖNER İŞLEMELER	MILLS (ROTARY TYPE)	DREHARBEITEN
* Küresel ve Çubuk Düz Halka Dişli Helisel Halka Dişli Doğrudan Bağlı * Çimento Fırını * Kurutucular ve Soğutucular	* Ball and Rod Spur Ring Gear Helical Ring Gear Direct Connected * Cement Kilns * Dryers and Coolers	* Sphärisch und Stab Flachringgetriebe Schrägverzahntes Hohlrad Direkter Anschluss * Zementofen * Trockner und Kühler

PGR DRIVE TECHNOLOGIES

TR UYGULAMA ALANLARI | EN APPLICATION AREAS | DE EİNSATZBEREİCHE

UYGULAMALAR	APPLICATIONS	ANWENDUNGEN
KERESTE ENDÜSTRİSİ	LUMBER INDUSTRY	HOLZİNDUSTRİE
* Kabuk Soyucular	* Barkers	* Schalenschäler
Besleme Tamburu	Spindle Feed	Zuführtrommel
Ana Tahrik	Main Drive	Hauptantrieb
* Konveyörler	* Conveyors	* Förderer
Brülör	Burner	Brenner
Ana Yük veya Ağır Yük	Main or Heavy Duty	Hauptlast oder Schwerlast
Ana Kütük	Main Log	Baumstumpf
Hızar ve Taşıma Bandı	Re-saw, Merry-Go-Round	Sägewerk und Förderband
Kalın Dilim	Slab	Platte
Taşıma	Transfer	Transport
* Kesme Testereleri	* Cut-Off Saws	* Trennsägen
Zincir	Chain	Kette
Sürükleme	Drag	Schleppen
* İndirme Boşaltma Tamburları	* Debarking Drums	* Entladetrommeln
* Uzun Deste	* Long Deck	* Langes Deck
* Tomruk Çekme-Eğme	* Log Hauls - Incline	* Kloben ziehen und abbiegen
* Kütük Döndürme Aygıtları	* Log Turning Devices	* Drehvorrichtungen für Baumstupfe
* Sıralama Tablası	* Sorting Table	* Sortiertabelle
* Taşıma	* Transfers	* Transport
Zincir	Chain	Kette
Kreynyolu	Causeway	Kranbahn
* Tabla Tahriki	* Tray Drives	* Tischlaufwerk
KAĞIT İŞLEMELERİ	PAPER MILLS	PAPIERFÜHRUNG
* Karıştırıcı	* Agitator (Mixer)	* Rührgerät
* Saf çözeltiler İçin Karıştırıcı	* Agitator for Pure Liquors	* Mischer für reine Lösungen
* Kabuk Soyma Tromelleri	* Barking Drums	* Peeling Tromels
* Mekanik Kabuk Soyucu	* Mechanical Barkers	* Mechanischer Schäler
* Dövücü - Öğütücü	* Beater	* Schlag - Mahlwerk
* Düzleştirme Makinesi	* Breaker Stack	* Richtmaschine
* Kalenderleme	* Calender	* Kalandrieren
* Yüzey Pürüzlendirici	* Chipper	* Oberflächenaufrauung
* Çentik Besleyici	* Chip Feeder	* Kerbzuführung
* Kaplama Merdanesi	* Coating Rolls	* Beschichtungswalze
* Konveyörler	* Conveyors	* Förderer
Çentik, Kabuk, Kimyasal	Chip, Bark, Chemical	Kerbe, Schale, Chemisch
Kalın Dilimler İçeren Kütükler	Log (including Slab)	Stämme mit dicken Scheiben
* Kesici	* Cutter	* Schneider
* Silindir Kalıpları	* Cylinder Molds	* Zylinderformen
* Kurutucu	* Dryer	* Trockner
Kağıt Makinesi	Paper Machine	Papiermaschine
Konveyör Tip	Conveyor Type	Förderertyp
* Kabartmalı Basıcı	* Embosser	* Geprägter Presser
* Ekstrüder	* Extruder	* Extruder
* Kağıt Merdaneleri	* Paper Rolls	* Papierrollen
* Presler	* Presses	* Pressen
* Küspe Makinesi	* Pulper	* Teigmacher
* Pompalar	* Pumps	* Pumpen
FİLTRELER	SCREENS	FILTER
* Havalı Yıkama	* Air Washing	* Luftwäsche
* Döner - Taş veya Çakıl	* Rotary - Stone or Gravel	* Rotierer - Stein oder Kies
* Hareketli Su Girişi	* Traveling Water Intake	* Beweglicher Wassereinlass

TR UYGULAMA ALANLARI | EN APPLICATION AREAS | DE EİNSATZBEREİCHE

UYGULAMALAR	APPLICATIONS	ANWENDUNGEN
PLASTİK ENDÜSTRİSİ İLK İŞLEMLER	PLASTIC INDUSTRY PRIMARY PROCESSING	KUNSTSTOFFINDUSTRIE ERSTE AKTIONEN
* Yoğun İç Karıştırıcılar Harmanlayıcı Kesintisiz Karıştırıcı	* Intensive Internal Mixers Batch Mixers Continuous Mixers	* Intensive interne Mixer Mixer Kontinuierlicher Mischer
PLASTİK ENDÜSTRİSİ İKİNCİL İŞLEMLER	PLASTIC INDUSTRY SECONDARY PROCESSING	KUNSTSTOFFINDUSTRIE SEKUNDÄRE PROZESSE
* Hacim Kalıpçıları * Kaplama * Tabaka * Boru * Ön Plastikleştirme * Rot * Saç, Plaka * Borular	* Blow Molders * Coating * Film * Pipe * Pre-Plasticizers * Rods * Sheet * Tubing	* Volumenformer * Glasur * Schicht * Rohr * Vorplastifizieren *Auswuchten * Haare, Platte * Rohre
POMPALAR	PUMPS	PUMPEN
* Santrifüj * Oranlama * Pistonlu Tek Tesirli - 3 veya daha fazla Silindir Çift Tesirli - 2 veya daha fazla Silindir * Döner Şanzuman Tipi Lob Pervane	* Centrifugal * Proportioning * Reciprocating Single Acting - 3 or more cylinders Double Acting - 2 or more cylinders *Rotary Gear Type Lobe Vane	* Zentrifuge * Bewertung * Kolben Einfachwirkend - 3 oder mehr Zylinder Doppeltwirkend - 2 oder mehr Zylinder * rotierend Übertragungsart Lob Propeller
KAUÇUK - LASTİK ENDÜSTRİSİ	RUBBER INDUSTRY	KAUTSCHUK - REIFENINDUSTRIE
* Yoğun İç Karıştırıcılar Harmanlayıcılar Kesintisiz Karıştırıcılar *Karıştırma İşlemi 2 Yumuşak Merdane 1 veya 2 Oluklu Merdane * Toplu İşleme - 2 Yumuşak Silindir * Kırıcı ve Isıtıcı - 2 Merdane, 1 Oluklu Merdane * Kırıcı - 2 Oluklu Merdane * Tutma, Besleme, Karıştırma İşlemi - 2 Merdane * Arıtıcı - 2 Merdane * Kalenderler	* Intensive Internal Mixers Batch Mixers Continuous Mixers * Mixing Mill 2 Smooth Rolls 1 or 2 corrugated Rolls * Batch Drop Mill - 2 Smooth Rolls * Cracker Warmer-2 Rolls,1 Corr. Roll * Cracker - 2 Corrugated Rolls * Holding, Feed and Blend Mill - 2 Rolls * Refiner - 2 Rolls * Calenders	* Intensive interne Mixer Mixer Kontinuierliche Mischer *Mischprozess 2 weiche Rollen 1 oder 2 gerillte Rollen * Stapelverarbeitung - 2 weiche Walzen * Brecher und Heizung - 2 Walzen, 1 Wellwalze * Brecher - 2 Wellwalzen * Halte-, Fütterungs-, Mischprozess - 2 Rollen * Refiner - 2 Walzen * Kalendrieren
ATIK SU BOŞALTIM EKİPMANLARI	SEWAGE DISPOSAI EQUIPMENT	AUSRÜSTUNG FÜR ABWASSERENTLEERUNG
* Çubuklu Elek * Kimyasal Besleme Üniteleri * Su Boşaltma Eleği * Köpük Kesici * Yavaş veya Hızlı Karıştırıcılar * Tortu Toplayıcı * Koyulaştırıcı * Vakumlu Filtre	* Bar Screens * Chemical Feeders * Dewatering Screen * Scum Breaker * Slow or Rapid Mixers * Sludge Collector * Thickener * Vacuum Filter	* Stick Sieb * Chemikalienzufuhreinheiten * Wasserablaufsieb * Schaumschneider * Langsame oder schnelle Mixer * Sedimentsammler * Verdickungsmittel * Vakuumfilter
KOMPAKTÖRLER	COMPACTORS	VERDICHTER
ÇEKTİRMELER - YAVAŞ VE KUVVETLİ	PULLERS - BARGE HAUL	AUFZİEHVORRİCHTUNGEN - LANGSAM UND STARK

TR UYGULAMA ALANLARI	EN APPLICATION AREAS	DE EİNSATZBEREİCHE

UYGULAMALAR	APPLICATIONS	ANWENDUNGEN
ŞEKER ENDÜSTRİSİ	SUGAR INDUSTRY	ZUCKERINDUSTRIE
* Pancar Dilimleme Aleti	* Beet Slicer	* Rübenschneider
* Kamış Bıçakları	* Cane Knives	* Schilfklingen
* Kırma Makineleri	* Crushers	* Zerkleinerungsmaschinen
TEKSTİL ENDÜSTRİSİ	TEXTILE INDUSTRY	TEXTILINDUSTRIE
* Harman Ölçer	* Batcher	* Dreschmesser
* Kalenderler	* Calenders	* Kalendrieren
* Şablonlar	* Cards	* Vorlagen
* Kuru Konserveler	* Dry Cans	* Trockenkonserven
* Boyama Makinesi	* Dyeing Machinery	* Färbemaschine
* Dokuma Tezgahları	* Looms	* Webstühle
* Çamaşır Sıkma Makinesi - Merdane	* Mangle	* Waschmaschine - Roller
* Kaplama	* Napper	* Glasur
* Doldurma Makinesi	* Pads	* Abfüllmaschine
* Haşıl Makinesi	* Siashers	* Kalibriermaschine
* Halat Yıkama Makinesi	* Soapers	* Seilwaschmaschine
* Eğirme Makinesi	* Spinners	* Spinnmaschine
* Germe Kurutma Makineleri	* Tenter Frames	* Stretch-Trocknungsmaschinen
* Yıkama Makineleri	* Washers	* Waschmaschinen
* Masura Sarıcısı	* Winders	* Spuler
DAMPERLİ ARAÇLAR	CAR DUMPERS	DIPPER FAHRZEUGE
ÇEKİCİ ARAÇLAR	CAR PULLERS	TURMFAHRZEUGE
ARITICILAR	CLARIFIERS	REİNİGUNGSMASCHİNEN
KONSERVE DOLUM MAKİNELERİ	CAN FILLING MACHINES	DOSENFÜLLMASCHİNEN

TR KULLANILAN TERİMLER

EN NOMENCLATURE

DE BEGRİFFE

REDÜKTÖR TİPİ / GEAR TYPE / GETRIEBETYP

Ayak montajlı
Food mounted
Fußbefestigung

PKD A 0290 ... H 5290 = **İki kademeli, helisel konik dişlili redüktör**
Double reduction, Helical bevel gearboxes
Zweistufiges, Kegelstirnradgetriebe

PKD 1390 ... PKD G 9390 = **Üç kademeli, helisel konik dişlili redüktör**
Triple reduction, Helical bevel gearboxes
Dreistufiges, Kegelstirnradgetriebe

PKD 1490 ... PKD 5490 = **Dört kademeli, helisel konik dişlili redüktör**
Quadruple reduction, Helical bevel gearboxes
Vierstufiges, Kegelstirnradgetriebe

PKD 6390/32 ... PKD G 9390/62 = **Beş kademeli, helisel konik dişlili redüktör**
Quintuple reduction, Helical bevel gearboxes
Fünfstufiges, Kegelstirnradgetriebe

Gövdeden montajlı
Case mounted
Gehäuse Flanschmontage

PKD A 0290 ... PKD H 5290 = **İki kademeli, helisel konik dişlili redüktör**
Double reduction, Helical bevel gearboxes
Zweistufiges, Kegelstirnradgetriebe

PKD 1390 ... PKD G 9390 = **Üç kademeli, helisel konik dişlili redüktör**
Triple reduction, Helical bevel gearboxes
Dreistufiges, Kegelstirnradgetriebe

PKD 1490 ... PKD 5490 = **Dört kademeli, helisel konik dişlili redüktör**
Quadruple reduction, Helical bevel gearboxes
Vierstufiges, Kegelstirnradgetriebe

PKD 6390/32 ... PKD G 9390/62 = **Beş kademeli, helisel konik dişlili redüktör**
Quintuple reduction, Helical bevel gearboxes
Fünfstufiges, Kegelstirnradgetriebe

Gövdeden montajlı, B5 flanşlı
Case mounted, Flange B5
Gehäuse Flanschmontage, Flansch B5

PKD A 0290 ... PKD H 5290 = **İki kademeli, helisel konik dişlili redüktör**
Double reduction, Helical bevel gearboxes
Zweistufiges, Kegelstirnradgetriebe

PKD 1390 ... PKD G 9390 = **Üç kademeli, helisel konik dişlili redüktör**
Triple reduction, Helical bevel gearboxes
Dreistufiges, Kegelstirnradgetriebe

PKD 1490 ... PKD 5490 = **Dört kademeli, helisel konik dişlili redüktör**
Quadruple reduction, Helical bevel gearboxes
Vierstufiges, Kegelstirnradgetriebe

PKD 6390/32 ... PKD G 9390/62 = **Beş kademeli, helisel konik dişlili redüktör**
Quintuple reduction, Helical bevel gearboxes
Fünfstufiges, Kegelstirnradgetriebe

REDÜKTÖR DİZAYNI / GEAR DESIGN / GETRIEBE - KURZZEICHEN

TMA... = **Ayak montajlı, Tek mil çıkışlı**
Foot mounted, Solid shaft
Fußbefestigung, einseitige Abtriebswelle

DA... = **Ayak montajlı, Delik milli**
Foot mounted, Hollow shaft
Fußbefestigung, Hohlwelle

ÇMA... = **Ayak montajlı, Çift mil çıkışlı,**
Foot mounted, Solid shaft on both sides.
Fußbefestigung, doppelseitige Abtriebswelle

DA/KS... = **Ayak montajlı, Delik milli, Konik sıktırmalı**
Foot mounted, Hollow shaft, Shrink disc connector
Fußbefestigung, Hohlwelle, Schrumpfscheibe

TMA/B5... = **Ayak montajlı,Tek mil çıkışlı, B5 flanşlı**
Foot mounted, Solid shaft, Flange B5
Fußbefestigung, einseitige Abtriebswelle, B5-Flansch

DA/B5... = **Ayak montajlı, Delik milli, B5 flanşlı**
Foot mounted, Hollow shaft, Flange B5
Fußbefestigung, Hohlwelle, B5-Flansch

DA/KS-B5... = **Ayak montajlı, Delik milli, Konik sıktırmalı, B5 flanşlı**
Foot mounted, Hollow shaft, Shrink disc connector, Flange B5
Fußbefestigung, Hohlwelle, Schrumpfscheibe, B5-Flansch

TMA/B14... = **Ayak montajlı, Tek mil çıkışlı, B14 flanşlı**
Foot mounted, Solid shaft, Flange B14
Fußbefestigung, einseitige Abtriebswelle, B14-Flansch

DA/B14... = **Ayak montajlı, Delik milli, B14 flanşlı**
Foot mounted, Hollow shaft, Flange B14
Fußbefestigung, Hohlwelle, B14-Flansch

ÇMA/B14... = **Ayak montajlı, Çift mil çıkışlı, B14 flanşlı**
Foot mounted, Solid shaft on both sides , Flange B14
Fußbefestigung, doppelseitige Abtriebswelle, B14-Flansch

DA/KS-B14... = **Ayak montajlı, Delik milli, Konik sıktırmalı, B14 flanşlı**
Foot mounted, Hollow shaft, Shrink disc connector, Flange B14
Fußbefestigung, Hohlwelle, Schrumpfscheibe, B14-Flansch

DG/B14... = **Gövdeden montajlı, Delik milli, B14 flanşlı**
Case mounted, Hollow shaft, Flange B14
Gehäuse Flanschmontage, Hohlwelle, B14-Flansch

DG/KS-B14... = **Gövdeden montajlı, Delik milli, Konik sıktırmalı, B14 flanşlı**
Case mounted, Hollow shaft, Shrink disk connector, Flange B14
Gehäuse Flanschmontage, Hohlwelle, Schrumpfscheibe, B14-Flansch

DG/TK... = **Gövdeden montajlı, Delik milli, Tork kollu**
Case mounted, Hollow shaft, Torque arm
Gehäuse Flanschmontage, Hohlwelle, Drehmomentstütze

DG/KS-TK... = **Gövdeden montajlı, Delik milli, Konik sıktırmalı, Tork kollu**
Case mounted, Hollow shaft, Shrink disc connector, Torque arm
Gehäuse Flanschmontage,Hohlwelle, Schrumpfscheibe, Drehmomentstütze

DG/TKP-B14... = **Gövdeden montajlı, Delik milli, Tork kolu platformu B14 flanşlı**
Case mounted, Hollow shaft, Torque arm platform, Flange B14
Gehäuse Flanschmontage, Hohlwelle, Drehmomentstütze Plattform, B14-Flansch

DG/KS-TKP-B14... =**Gövdeden montajlı, Delik milli, Konik sıktırmalı, Tork kolu platformu, B14 flanşlı**
Case mounted, Hollow shaft, Shrink disc connector Torque arm platform, Flange B14
Gehäuse Flanschmontage, Hohlwelle, Schrumpfscheibe, Drehmomentstütze Plattform, B14-Flansch

TMG/B5... = **Gövdeden montajlı, Tek mil çıkışlı, B5 flanşlı**
Case mounted, Solid shaft, Flange B5
Gehäuse Flanschmontage,einseitige Abtriebswelle, B5-Flansch

DG/B5... = **Gövdeden montajlı, Delik milli, B5 flanşlı**
Case mounted, Hollow shaft, Flange B5
Gehäuse Flanschmontage, Hohlwelle, B5-Flansch

DG/KS-B5... = **Gövdeden montajlı, Delik milli, Konik sıktırmalı, B5 flanşlı**
Case mounted, Hollow shaft, Shrink disc connector, Flange B5
Gehäuse Flanschmontage, Hohlwelle, Schrumpfscheibe, B5-Flansch

TMG/B14... = **Gövdeden montajlı, Tek mil çıkışlı, B14 flanşlı**
Case mounted, Solid shaft, Flange B14
Gehäuse Flanschmontage, einseitige Abtriebswelle, B14-Flansch

TR KULLANILAN TERİMLER | EN NOMENCLATURE | DE BEGRİFFE

Giriş Aksamları Input Options Eingabeoptionen	**Motor** Motor Motor	**Kutup Numarası** Number of Poles Anzahl der Pole	**Motor Seçenekleri** Motor Options Motoroptionen
W = Motorsuz girişli redüktörler için aksam With free input shaft Bei Getrieben mit freier Antriebswelle **IEC = DIN 42677' ye göre standart motorlar için aksamlar** For assembly with IEC standard motors acc. to DIN 42677 Bei Getrieben mit IEC-Anbau gilt die Normleistung der jeweiligen Baugröße nach DIN 42677, **PAM = DIN 42677' ye göre standart motorlar için aksamlar** For assembly with PAM standard motors acc. to DIN 42677 Bei Getrieben mit PAM-Anbau gilt die Normleistung der jeweiligen Baugröße nach DIN 42677, **T = Turbo kaplin** Turbo coupling Turbokupplung	**Üç fazlı motor** **Motor boyutu 63 - 315** Three phase motor Motor size 63 - 315 Drehstrommotor Motorgröße 63 - 315 **EExeII = Patlamaya karşı güvenliği arttırılmış üç fazlı motor** Explosion proof three phase motor increased safety Drehstrommotor mit erhöhter Explosionssicherheit	**2 = 2 Kutuplu** 2 Poles 2 Pole **4 = 4 Kutuplu** 4 Poles 4 Pole **6 = 6 Kutuplu** 6 Poles 6 Pole **4 - 2 = 1:2 oranında hız değiştirici dahlander bağlantısı** Pole changing 1:2 Dahlander connection Geschwindigkeitswechsler DAHLANDER **8 - 2 = 1:4 oranında hız değiştirici ayrılmış sarmal dizilişli** Pole changing 1:4 Separate windings Geschwindigkeitswechsler-getrennte spiralförmige Anordnung **Diğer kutup kombinasyonları istendiğinde karşılanacaktır** Other pole combinations on request Andere Polkombinationen sind auf Anfrage erhältlich	**BRE = Frenli** With brake Mit Bremse **EF = Tek fazlı, fanlı** Single phase, Separate fan Einphasig, mit Lüfter **ZF = Çift fazlı, fanlı** Double phase, Separate fan, Zweiphasig, mit Lüfter **DF = Üç fazlı, fanlı** Separate fan, three phase Dreiphasig, mit Lüfter **IG = Enkoderli** With encoder Mit encoder **KK/FK = Debriyajlı** With clutches Mit Kupplung **SR = Toza karşı korumalı fren** Brake dust - proof Staubgeschützte Bremse **TF = Termistörlü** Thermistor Mit Thermistor **RG = Korozyon korumalı frenli** Brake corrosion protected Mit Korrosionsschutzbremse **WU = Yumuşak kalkışlı rotor** Soft start rotor Sanftanlaufrotor **RLS = Geri dönmeye karşı kilitli** Backstop Rücklaufsperre **TW = Isıya duyarlı** Thermal trip Wärmeempfindliche **HL = Manuel frenli motor** Brake motor with hand release Motor mit Handbremse **F = Extra Fan** Auxiliary Fan Fremdlüfter

TR PKD MODÜLER SİSTEMİ | EN MODULAR SYSTEM OF PKD | DE PKD MODULARES SYSTEM

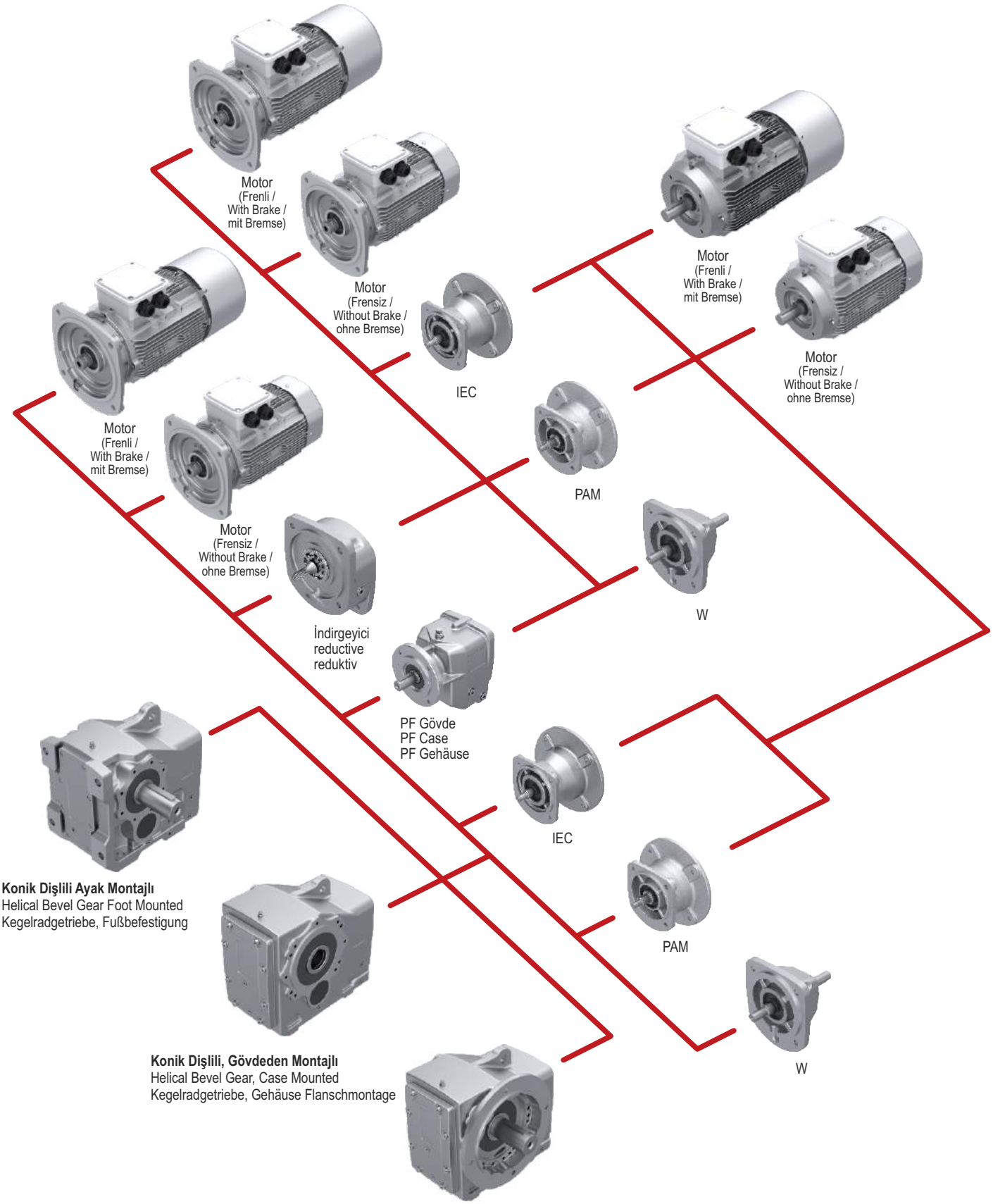

TR MEVCUT DİZAYNLARA GENEL BAKIŞ

EN OVERVIEW TO AVAILABLE DESIGNS

DE ÜBERSICHT AKTUELLE DESIGNS

Kısaltmalar Abbrev. Abkürzungen	Anlamı Meaning Bedeutung	Helisel Konik Dişlili Redüktör Helical Bevel Gear Units Kegelstirnradgetriebe
DG/B5	**Gövdeden montajlı, Delik milli, B5 flanşlı** / Case mounted, Hollow shaft, Flange B5 / Gehäuse Flanschmontage, Hohlwelle, B5-Flansch	✓ (2)
DA	**Ayak montajlı, Delik milli,** / Foot mounted, Hollow shaft / Fußbefestigung, Hohlwelle	✓
DA/B5	**Ayak montajlı, Delik milli, B5 flanşlı** / Foot mounted, Hollow shaft, Flange B5 / Fußbefestigung, Hohlwelle, B5-Flansch	✓ (1)
DA/B14	**Ayak montajlı, Delik milli, B14 flanşlı** / Foot mounted, Hollow shaft, Flange B14 / Fußbefestigung, Hohlwelle, B14-Flansch	✓
DG/B14	**Gövdeden montajlı, Delik milli, B14 flanşlı** / Case mounted, Hollow shaft, Flange B14 / Gehäuse Flanschmontage, Hohlwelle, B14-Flansch	✓ (2)
DG/TK	**Gövdeden montajlı, Delik milli, Tork kollu** / Case mounted, Hollow shaft, Torque arm / Gehäuse Flanschmontage, Hohlwelle, Drehmomentstütze	✓ (1) (2)
DG/TKP-B14	**Gövdeden montajlı, Delik milli, Tork kolu platformu, B14 flanşlı** / Case mounted, Hollow shaft, Torque arm console, Flange B14 / Gehäuse Flanschmontage, Hohlwelle, Drehmomentstütze, B14-Flansch	✓ (2)
Ç	**Çektirme Kiti** / Puller Kit / Befestigungsbausatz	✓
DIN 5480	**Kayıcılı delik milli DIN 5480** / Splined hollow shaft, DIN 5480 / Hohlwelle mit DIN 5480	✓
KK	**Koruma kapaklı** / Cover as a touch guard / Mit Schutzdeckel	✓
IEC	**IEC adaptörü** / Adapter for mounting B5 IEC standard motors / IEC-Adapter	✓
ÇMA	**Ayak montajlı, Çift mil çıkışlı** / Foot mounted, Solid shaft on both sides / Fußbefestigung, doppelseitige Abtriebswelle	✓
B	**Kilit** / Integrated backstop / Rücklaufsperre	✓
WB	**W kilidi** / Backstop in W adapter / W-Sperre	✓
KS	**Konik sıktırma** / Hollow shaft with shrink disc / Schrumpfscheibe	✓
GKS	**Güçlendirilmiş konik sıktırma** / Hollow shaft with reinforced shrink disc / Verstärkte Schrumpfscheibe	✓
TMG/B5	**Gövdeden montajlı, Tek mil çıkışlı, B5 flanşlı** / Case mounted, Solid shaft, Flange B5 / Gehäuse Flanschmontage, einseitige Abtriebswelle, B5-Flansch	✓ (2)
GR	**Güçlendirilmiş rulman** / Reinforced bearing / Verstärktes Lager	✓
GB5	**Güçlendirilmiş B5 Flanşı** / Agitator design / Verstärkter B5-Flansch	✓
TMA/B5	**Ayak montajlı, Tek mil çıkışlı, B5 flanşlı** / Foot mounted, Solid shaft, Flange B5 / Fußbefestigung, einseitige Abtriebswelle, B5-Flansch	✓
TMA	**Ayak montajlı, Tek mil çıkışlı** / Foot mounted, Solid shaft / Fußbefestigung, einseitige Abtriebswelle	✓
TMG/B14	**Gövdeden montajlı, Tek mil çıkışlı, B14 flanşlı** / Case Mounted, Solid shaft, Flange B14 / Gehäuse Flanschmontage, einseitige Abtriebswelle, B14-Flansch	✓ (2)
W	**W kovanı** / Free input shaft / W-Adapter	✓
PAM	**PAM adaptörü** / PAM Adapter / PAM Adapter	✓

✓ Mevcut tasarımlar onay işareti ile belirtilmiştir.

1-) PKD 7390 (dahil)' a kadar mevcuttur.
2-) Gövdenin alt kısmında ilave diş açılmış delikler mevcuttur. Bu delikler redüktörün montajı için değildir.

✓ Sign is presented which designs are existed for gear units.

1) These designs exist for PKD 7390 and smaller cases
2) This number shows, there are threaded holes at the bottom of gear unit but these are not used for installation

✓ Vorhandene Designs sind mit einem Häkchen gekennzeichnet.

1-) Erhältlich bis PKD 7390 (im Lieferumfang enthalten).
2-) An der Unterseite des Gehäuses befinden sich zusätzliche Gewindebohrungen. Diese Bohrungen dienen nicht der Befestigung des Getriebes.

TR ÜRÜNLERİMİZ | EN OUR PRODUCTS | DE UNSERE PRODUKTE

1) **PKD B 0290... TMA** - 63 M / 4 **R**
Tek mil çıkışlı, Ayak montajlı, İki kademeli, Helisel konik dişlili, Motorlu redüktör
Solid shaft, Foot mounted, Double reduction, Helical bevel gear unit, With motor
Einseitige Abtriebswelle, Fußbefestigung, zweistufig, Kegelstirnradgetriebe, Mit motor

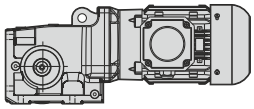
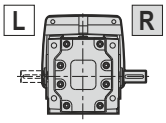

PKD B 0290... TMA - W **R**
Tek mil çıkışlı, Ayak montajlı, İki kademeli, Helisel konik dişlili, W kovanlı redüktör
Solid shaft, Foot mounted, Double reduction, Helical bevel gear unit, With W adapter
Einseitige Abtriebswelle, Fußbefestigung, zweistufig, Kegelstirnradgetriebe, Mit W-Adapter

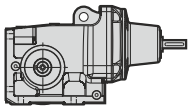
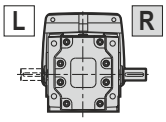

PKD B 0290... TMA - IEC 63 **R**
Tek mil çıkışlı, Ayak montajlı, İki kademeli, Helisel konik dişlili, IEC adaptörlü redüktör
Solid shaft, Foot mounted, Double reduction, Helical bevel gear unit, With IEC adapter
Einseitige Abtriebswelle, Fußbefestigung, zweistufig, Kegelstirnradgetriebe, Mit IEC-adapter

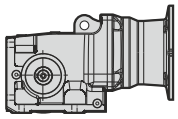
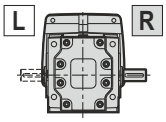

PKD B 0290... TMA - PAM 63 **R**
Tek mil çıkışlı, Ayak montajlı, İki kademeli, Helisel konik dişlili, PAM adaptörlü redüktör
Solid shaft, Foot mounted, Double reduction, Helical bevel gear unit, With PAM adapter
Einseitige Abtriebswelle, Fußbefestigung, zweistufig, Kegelstirnradgetriebe, Mit PAM adapter

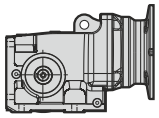
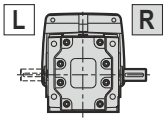

---

2) **PKD B 0290... DA** - 63 M / 4
Delik milli, Ayak montajlı, İki kademeli, Helisel konik dişlili, Motorlu redüktör
Hollow shaft, Foot mounted, Double reduction, Helical bevel gear unit, With motor
Hohlwelle, Fußbefestigung, zweistufig, Kegelstirnradgetriebe, Mit motor

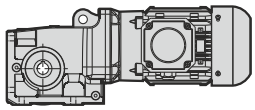
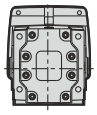

PKD B 0290... DA - W
Delik milli, Ayak montajlı, İki kademeli, Helisel konik dişlili, W kovanlı redüktör
Hollow shaft, Foot mounted, Double reduction, Helical bevel gear unit, With W adapter
Hohlwelle, Fußbefestigung, zweistufig, Kegelstirnradgetriebe, Mit W-adapter

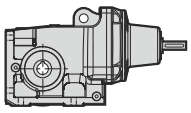
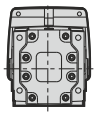

PKD B 0290... DA - IEC 63
Delik milli, Ayak montajlı, İki kademeli, Helisel konik dişlili, IEC adaptörlü redüktör
Hollow shaft, Foot mounted, Double reduction, Helical bevel gear unit, With IEC adapter
Hohlwelle, Fußbefestigung, zweistufig, Kegelstirnradgetriebe, Mit IEC-Adapter

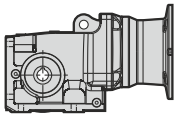
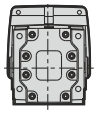

PKD B 0290... DA - PAM 63
Delik milli, Ayak montajlı, İki kademeli, Helisel konik dişlili, PAM adaptörlü redüktör
Hollow shaft, Foot mounted, Double reduction, Helical bevel gear unit, With PAM adapter
Hohlwelle, Fußbefestigung, zweistufig, Kegelstirnradgetriebe, Mit PAM adapter

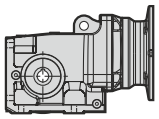
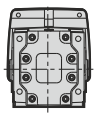

---

3) **PKD B 0290... DA / KS** - 63 M / 4 **R**
Delik milli, Ayak montajlı, Konik sıktırmalı, İki kademeli, Helisel konik dişlili, Motorlu redüktör
Hollow shaft, Foot mounted, Shrink disc connector, Double reduction, Helical bevel gear unit, With motor
Hohlwelle, Fußbefestigung, Schrumpfscheibe, zweistufig, Kegelstirnradgetriebe, Mit motor

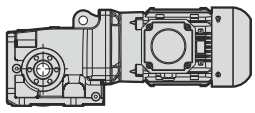
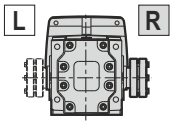

PKD B 0290... DA / KS - W **R**
Delik milli, Ayak montajlı, Konik sıktırmalı, İki kademeli, Helisel konik dişlili, W kovanlı redüktör
Hollow shaft, Foot mounted, Shrink disc connector, Double reduction, Helical bevel gear unit, With W adapter
Hohlwelle, Fußbefestigung, Schrumpfscheibe, zweistufig, Kegelstirnradgetriebe, Mit W-adapter

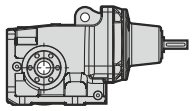
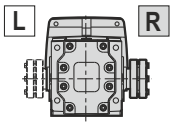

PKD B 0290... DA / KS - IEC 63 **R**
Delik milli, Ayak montajlı, Konik sıktırmalı, İki kademeli, Helisel konik dişlili, IEC adaptörlü redüktör
Hollow shaft, Foot mounted, Shrink disc connector, Double reduction, Helical bevel gear unit, With IECadapter
Hohlwelle, Fußbefestigung, Schrumpfscheibe, zweistufig, Kegelstirnradgetriebe, Mit IEC-Adapter

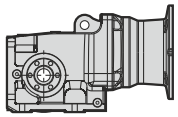
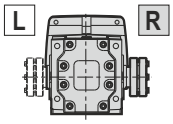

PKD B 0290... DA / KS - PAM 63 **R**
Delik milli, Ayak montajlı, Konik sıktırmalı, İki kademeli, Helisel konik dişlili, PAM adaptörlü redüktör
Hollow shaft, Foot mounted, Shrink disc connector, Double reduction, Helical bevel gear unit, With PAM adapter
Hohlwelle, Fußbefestigung, Schrumpfscheibe, zweistufig, Kegelstirnradgetriebe, PAM Adapter

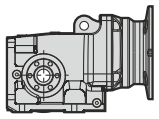
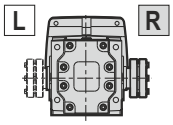

Not : L ve R çıkış yönünü göstermektedir. / Note: L and R shows that output direction. / Hinweis: L und R geben die Ausgangsrichtung an.

TR ÜRÜNLERİMİZ | EN OUR PRODUCTS | DE UNSERE PRODUKTE

4) **PKD B 0290... ÇMA** - 63 M / 4
Çift mil çıkışlı, Ayak montajlı, İki kademeli, Helisel konik dişlili, Motorlu redüktör
Solid shaft on both sides, Foot mounted, Double reduction, Helical bevel gear unit, With motor
Doppelseitige Abtriebswelle, Fußbefestigung, zweistufig, Kegelstirnradgetriebe, Mit motor

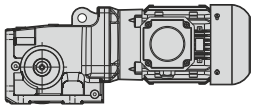
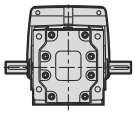

PKD B 0290... ÇMA - W
Çift mil çıkışlı, Ayak montajlı, İki kademeli, Helisel konik dişlili, W kovanlı redüktör
Solid shaft on both sides, Foot mounted, Double reduction, Helical bevel gear unit, With W adapter
Doppelseitige Abtriebswelle, Fußbefestigung, zweistufig, Kegelstirnradgetriebe, Mit W-Adapter

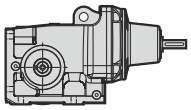
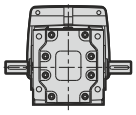

PKD B 0290... ÇMA - IEC 63
Çift mil çıkışlı, Ayak montajlı, İki kademeli, Helisel konik dişlili, IEC adaptörlü redüktör
Solid shaft on both sides, Foot mounted, Double reduction, Helical bevel gear unit, With IEC adapter
Doppelseitige Abtriebswelle, Fußbefestigung, zweistufig, Kegelstirnradgetriebe, Mit IEC-Adapter

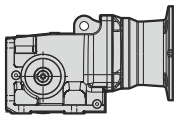
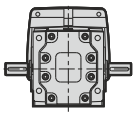

PKD B 0290... ÇMA - PAM 63
Çift mil çıkışlı, Ayak montajlı, İki kademeli, Helisel konik dişlili, PAM adaptörlü redüktör
Solid shaft on both sides, Foot mounted, Double reduction, Helical bevel gear unit, With PAM adapter
Doppelseitige Abtriebswelle, Fußbefestigung, zweistufig, Kegelstirnradgetriebe, Mit PAM Adapter

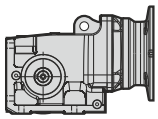
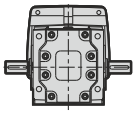

Not : L ve R çıkış yönünü göstermektedir.
Note: L and R shows that output direction.
Hinweis: L und R geben die Ausgangsrichtung an.

TR ÜRÜNLERİMİZ | EN OUR PRODUCTS | DE UNSERE PRODUKTE

1) **PKD 1390... TMA** - 63 M / 4 **R**
Tek mil çıkışlı, Ayak montajlı, Üç kademeli, Helisel konik dişlili, Motorlu redüktör
Solid shaft, Foot mounted, Triple reduction, Helical bevel gear unit, With motor
Einseitige Abtriebswelle, Fußbefestigung, dreistufig, Kegelstirnradgetriebe, Mit motor

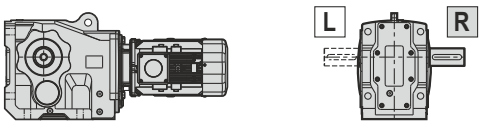

PKD 1390... TMA - W **R**
Tek mil çıkışlı, Ayak montajlı, Üç kademeli,Helisel konik dişlili, W kovanlı redüktör
Solid shaft, Foot mounted,Triple reduction, Helical bevel gear unit, With W adapter
Einseitige Abtriebswelle, Fußbefestigung, dreistufig Kegelstirnradgetriebe, Mit W-Adapter

PKD 1390... TMA - IEC 63 **R**
Tek mil çıkışlı, Ayak montajlı, Üç kademeli, Helisel konik dişlili, IEC adaptörlü redüktör
Solid shaft, Foot mounted, Triple reduction, Helical bevel gear unit, With IEC adapter
Einseitige Abtriebswelle, Fußbefestigung, dreistufig Kegelstirnradgetriebe, Mit IEC-adapter

PKD 1390... TMA - PAM 63 **R**
Tek mil çıkışlı, Ayak montajlı, Üç kademeli, Helisel konik dişlili, PAM adaptörlü redüktör
Helical bevel gear unit, Solid shaft, Foot mounted, Triple reduction, With PAM adapter
Einseitige Abtriebswelle, Fußbefestigung, dreistufig Kegelstirnradgetriebe, Mit PAM adapter

---

2) **PKD 1390... DA** - 63 M / 4
Delik milli, Ayak montajlı, Üç kademeli, Helisel konik dişlili, Motorlu redüktör
Hollow shaft, Foot mounted, Triple reduction, Helical bevel gear unit, With motor
Hohlwelle, Fußbefestigung, dreistufig, Kegelstirnradgetriebe, Mit motor

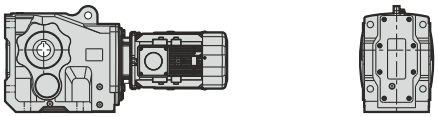

PKD 1390... DA - W
Delik milli, Ayak montajlı, İki kademeli, Helisel konik dişlili, W kovanlı redüktör
Hollow shaft, Foot mounted, Double reduction, Helical bevel gear unit, With W adapter
Hohlwelle, Fußbefestigung, dreistufig, Kegelstirnradgetriebe, Mit W-Adapter

PKD 1390... DA - IEC 63
Delik milli, Ayak montajlı, Üç kademeli, Helisel konik dişlili, IEC adaptörlü redüktör
Hollow shaft, Foot mounted, Triple reduction, Helical bevel gear unit, With IEC adapter
Hohlwelle, Fußbefestigung, dreistufig, Kegelstirnradgetriebe, Mit IEC-adapter

PKD 1390... DA - PAM 63
Delik milli, Ayak montajlı, Üç kademeli, Helisel konik dişlili, PAM adaptörlü redüktör
Hollow shaft, Foot mounted, Triple reduction, Helical bevel gear unit, With PAM adapter
Hohlwelle, Fußbefestigung, dreistufig, Kegelstirnradgetriebe, Mit PAM adapter

---

3) **PKD 1390... ÇMA** - 63 M / 4
Çift mil çıkışlı, Ayak montajlı, Üç kademeli, Helisel konik dişlili, Motorlu redüktör
Solid shaft on both sides, Foot mounted, Triple reduction, Helical bevel gear unit, With motor
Doppelseitige Abtriebswelle, Fußbefestigung, dreistufig, Kegelstirnradgetriebe, Mit motor

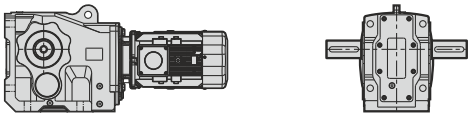

PKD 1390... ÇMA - W
Çift mil çıkışlı, Ayak montajlı, Üç kademeli, Helisel konik dişlili, W kovanlı redüktör
Solid shaft on both sides, Foot mounted, Triple reduction, Helical bevel gear unit, With W adapter
Doppelseitige Abtriebswelle, Fußbefestigung, dreistufig, Kegelstirnradgetriebe, Mit W-Adapter

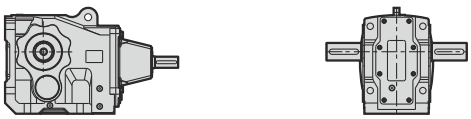

PKD 1390... ÇMA - IEC 63
Çift mil çıkışlı, Ayak montajlı, Üç kademeli, Helisel konik dişlili, IEC adaptörlü redüktör
Solid shaft on both sides, Foot mounted, Triple reduction, Helical bevel gear unit, With IEC adapter
Doppelseitige Abtriebswelle, Fußbefestigung, dreistufig, Kegelstirnradgetriebe, Mit IEC-adapter

PKD 1390... ÇMA - PAM 63
Çift mil çıkışlı, Ayak montajlı, Üç kademeli, Helisel konik dişlili, PAM adaptörlü redüktör
Solid shaft on both sides, Foot mounted, Triple reduction, Helical bevel gear unit, With PAM adapter
Doppelseitige Abtriebswelle, Fußbefestigung, dreistufig, Kegelstirnradgetriebe, Mit PAM adapter

Not : L ve R çıkış yönünü göstermektedir. / Note: L and R shows that output direction. / Hinweis: L und R geben die Ausgangsrichtung an.

TR ÜRÜNLERİMİZ | EN OUR PRODUCTS | DE UNSERE PRODUKTE

4) **PKD 1390... DA / KS -** 63 M / 4 **R**
Delik milli, Ayak montajlı, Konik sıktırmalı, Üç kademeli, Helisel konik dişlili, Motorlu redüktör
Hollow shaft, Foot mounted, Shrink disc connector, Triple reduction, Helical bevel gear unit, With motor
Hohlwelle, Fußbefestigung, Schrumpfscheibe, dreistufig, Kegelstirnradgetriebe, Mit motor

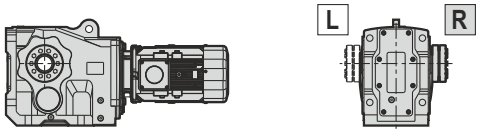

PKD 1390... DA / KS - W **R**
Delik milli, Ayak montajlı, Konik sıktırmalı, Üç kademeli, Helisel konik dişlili, W kovanlı redüktör
Hollow shaft, Foot mounted, Shrink disc connector, Triple reduction, Helical bevel gear unit, With W adapter
Hohlwelle, Fußbefestigung, Schrumpfscheibe, dreistufig, Kegelstirnradgetriebe, Mit W-Adapter

PKD 1390... DA / KS - IEC 63 **R**
Delik milli, Ayak montajlı, Konik sıktırmalı, Üç kademeli, Helisel konik dişlili, IEC adaptörlü redüktör
Hollow shaft, Foot mounted, Shrink disc connector, Triple reduction, Helical bevel gear unit, With IEC adapter
Hohlwelle, Fußbefestigung, Schrumpfscheibe, dreistufig, Kegelstirnradgetriebe, Mit IEC-adapter

PKD 1390... DA / KS - PAM 63 **R**
Delik milli, Ayak montajlı, Konik sıktırmalı, Üç kademeli, Helisel konik dişlili, PAM adaptörlü redüktör
Hollow shaft, Foot mounted, Shrink disc connector, Triple reduction, Helical bevel gear unit, With PAM adapter
Hohlwelle, Fußbefestigung, Schrumpfscheibe, dreistufig, Kegelstirnradgetriebe, Mit PAM adapter

5) **PKD 1390... TMA / B5 -** 63 M / 4 **R**
Tek mil çıkışlı, Ayak montajlı, B5 flanşlı, Üç kademeli Helisel konik dişlili, Motorlu redüktör
Solid shaft, Foot mounted, Flange B5, Triple reduction, Helical bevel gear unit, With motor
Einseitige Abtriebswelle, Fußbefestigung, B5 Flansch, dreistufig, Kegelstirnradgetriebe, Mit motor

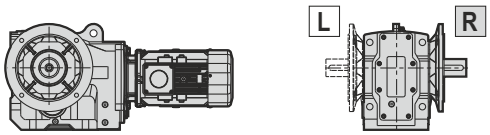

PKD 1390... TMA / B5 - W **R**
Tek mil çıkışlı, Ayak montajlı, B5 flanşlı, Üç kademeli, Helisel konik dişlili, W kovanlı redüktör
Solid shaft, Foot mounted, Flange B5, Triple reduction, Helical bevel gear unit, With W adapter
Einseitige Abtriebswelle, Fußbefestigung, B5 Flansch, dreistufig, Kegelstirnradgetriebe, Mit W-Adapter

PKD 1390... TMA / B5 - IEC 63 **R**
Tek mil çıkışlı, Ayak montajlı, B5 flanşlı, Üç kademeli, Helisel konik dişlili, IEC adaptörlü redüktör
Solid shaft, Foot mounted, Flange B5, Triple reduction, Helical bevel gear unit, With IEC adapter
Einseitige Abtriebswelle, Fußbefestigung, B5 Flansch, dreistufig, Kegelstirnradgetriebe, Mit IEC-adapter

PKD 1390... TMA / B5 - PAM 63 **R**
Tek mil çıkışlı, Ayak montajlı, B5 flanşlı, Üç kademeli, Helisel konik dişlili, PAM adaptörlü redüktör
Solid shaft, Foot mounted, Flange B5, Triple reduction, Helical bevel gear unit, With PAM adapter
Einseitige Abtriebswelle, Fußbefestigung, B5 Flansch, dreistufig, Kegelstirnradgetriebe, Mit PAM adapter

6) **PKD 1390... DA / B5** - 63 M / 4 **R**
Delik milli, Ayak montajlı, B5 flanşlı, Üç kademeli, Helisel konik dişlili, Motorlu redüktör
Helical bevel gear unit, Hollow shaft, Foot mounted, Flange B5, Triple reduction, With motor
Hohlwelle, Fußbefestigung, B5 Flansch, dreistufig, Kegelstirnradgetriebe, Mit motor

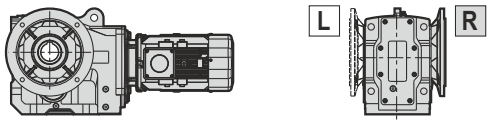

PKD 1390... DA / B5 - W **R**
Delik milli, Ayak montajlı, B5 flanşlı, Üç kademeli, Helisel konik dişlili, W kovanlı redüktör
Helical bevel gear unit, Hollow shaft, Foot mounted, Flange B5, Triple reduction, With W adapter
Hohlwelle, Fußbefestigung, B5 Flansch, dreistufig, Kegelstirnradgetriebe, Mit W-Adapter

PKD 1390... DA / B5 - IEC 63 **R**
Delik milli, Ayak montajlı, B5 flanşlı, Üç kademeli, Helisel konik dişlili, IEC adaptörlü redüktör
Helical bevel gear unit, Hollow shaft, Foot mounted, Flange B5, Triple reduction, With IEC adapter
Hohlwelle, Fußbefestigung, B5 Flansch, dreistufig, Kegelstirnradgetriebe, Mit IEC-adapter

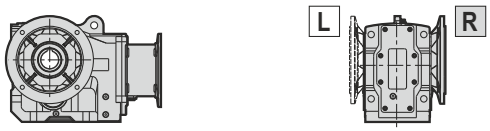

PKD 1390... DA / B5 - PAM 63 **R**
Delik milli, Ayak montajlı, B5 flanşlı, Üç kademeli, Helisel konik dişlili, PAM adaptörlü redüktör
Helical bevel gear unit, Hollow shaft, Foot mounted, Flange B5, Triple reduction, With PAM adapter
Hohlwelle, Fußbefestigung, B5 Flansch, dreistufig, Kegelstirnradgetriebe, Mit PAM adapter

Not : L ve R çıkış yönünü göstermektedir. / Note: L and R shows that output direction. / Hinweis: L und R geben die Ausgangsrichtung an.

TR ÜRÜNLERİMİZ | EN OUR PRODUCTS | DE UNSERE PRODUKTE

7) **PKD 1390... DA / KS-B5** - 63 M / 4 R
Delik milli, Ayak montajlı, Konik sıktırmalı, B5 flanşlı, Üç kademeli, Helisel konik dişlili, Motorlu redüktör
Hollow shaft, Foot mounted, Shrink disc connector, Flange B5, Triple reduction, Helical bevel gear unit, With motor
Hohlwelle, Fußbefestigung, Schrumpfscheibe, B5 Flansch, dreistufig, Kegelstirnradgetriebe, Mit motor

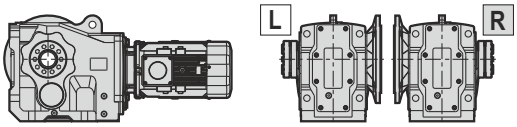

PKD 1390... DA / KS-B5 - W R
Delik milli, Ayak montajlı, Konik sıktırmalı, B5 flanşlı, Üç kademeli, Helisel konik dişlili, W kovanlı redüktör
Hollow shaft, Foot mounted, Shrink disc connector, Flange B5, Triple reduction, Helical bevel gear unit, With W adapter
Hohlwelle, Fußbefestigung, Schrumpfscheibe, B5 Flansch, dreistufig, Kegelstirnradgetriebe, Mit W-Adapter

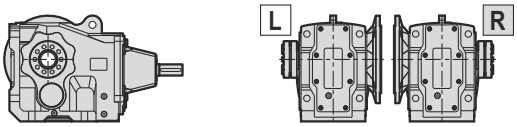

PKD 1390... DA / KS-B5 - IEC 63 R
Delik milli, Ayak montajlı, Konik sıktırmalı, B5 flanşlı, Üç kademeli, Helisel konik dişlili, IEC kovanlı redüktör
Hollow shaft, Foot mounted, Shrink disc connector, Flange B5, Triple reduction, Helical bevel gear unit, With IEC adapter
Hohlwelle, Fußbefestigung, Schrumpfscheibe, B5 Flansch, dreistufig, Kegelstirnradgetriebe, Mit IEC-adapter

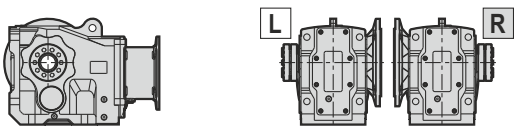

PKD 1390... DA / KS-B5 - PAM 63 R
Delik milli, Ayak montajlı, Konik sıktırmalı, B5 flanşlı, Üç kademeli, Helisel konik dişlili, PAM kovanlı redüktör
Hollow shaft, Foot mounted, Shrink disc connector, Flange B5, Triple reduction, Helical bevel gear unit, With PAM adapter
Hohlwelle, Fußbefestigung, Schrumpfscheibe, B5 Flansch, dreistufig, Kegelstirnradgetriebe, Mit PAM adapter

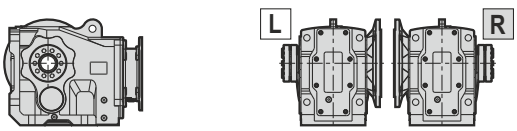

8) **PKD 1390... TMA / B14** - 63 M / 4 R
Tek mil çıkışlı, Ayak montajlı, Üç kademeli, B14 flanşlı, Helisel konik dişlili, Motorlu redüktör
Solid shaft, Foot mounted, Triple reduction, Flange B14, Helical bevel gear unit, With motor
Einseitige Abtriebswelle, Fußbefestigung, dreistufig, B14 Flansch, Kegelstirnradgetriebe, Mit motor

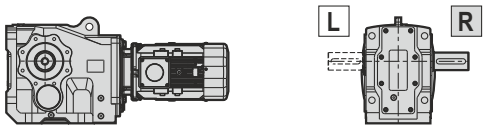

PKD 1390... TMA / B14 - W R
Tek mil çıkışlı, Ayak montajlı, Üç kademeli, B14 flanşlı, Helisel konik dişlili, W kovanlı redüktör
Solid shaft, Foot mounted, Triple reduction, Flange B14, Helical bevel gear unit, With W adapter
Einseitige Abtriebswelle, Fußbefestigung, dreistufig, B14 Flansch, Kegelstirnradgetriebe, Mit W-Adapter

PKD 1390... TMA / B14 - IEC 63 R
Tek mil çıkışlı, Ayak montajlı, Üç kademeli, B14 flanşlı, Helisel konik dişlili, IEC adaptörlü redüktör
Solid shaft, Foot mounted, Triple reduction, Flange B14, Helical bevel gear unit, With IEC adapter
Einseitige Abtriebswelle, Fußbefestigung, dreistufig, B14 Flansch, Kegelstirnradgetriebe, Mit IEC-adapter

PKD 1390... TMA / B14 - PAM 63 R
Tek mil çıkışlı, Ayak montajlı, Üç kademeli, B14 flanşlı, Helisel konik dişlili, PAM adaptörlü redüktör
Solid shaft, Foot mounted, Triple reduction, Flange B14, Helical bevel gear unit, With PAM adapter
Einseitige Abtriebswelle, Fußbefestigung, dreistufig, B14 Flansch, Kegelstirnradgetriebe, Mit PAM adapter

9) **PKD 1390... DA / B14** - 63 M / 4
Delik milli, Ayak montajlı, Üç kademeli,B14 flanşlı, Helisel konik dişlili, Motorlu redüktör
Hollow shaft, Foot mounted, Triple reduction, Flange B14, Helical bevel gear unit, With motor
Hohlwelle, Fußbefestigung, dreistufig, B14 Flansch, Kegelstirnradgetriebe, Mit motor

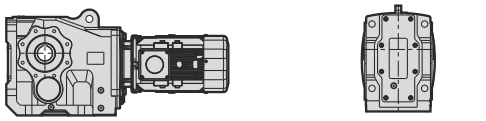

PKD 1390... DA / B14 - W
Delik milli, Ayak montajlı, Üç kademeli, B14 flanşlı, Helisel konik dişlili, W kovanlı redüktör
Hollow shaft, Foot mounted, Triple reduction, Flange B14, Helical bevel gear unit, With W adapter
Hohlwelle, Fußbefestigung, dreistufig, B14 Flansch, Kegelstirnradgetriebe, Mit W-Adapter

PKD 1390... DA / B14 - IEC 63
Delik milli, Ayak montajlı, Üç kademeli, B14 flanşlı, Helisel konik dişlili, IEC adaptörlü redüktör
Hollow shaft, Foot mounted, Triple reduction, Flange B14, Helical bevel gear unit, With IEC adapter
Hohlwelle, Fußbefestigung, dreistufig, B14 Flansch, Kegelstirnradgetriebe, Mit IEC-adapter

PKD 1390... DA / B14 - PAM 63
Delik milli, Ayak montajlı, Üç kademeli, B14 flanşlı, Helisel konik dişlili, PAM adaptörlü redüktör
Hollow shaft, Foot mounted, Triple reduction, Flange B14, Helical bevel gear unit, With PAM adapter
Hohlwelle, Fußbefestigung, dreistufig, B14 Flansch, Kegelstirnradgetriebe, Mit PAM adapter

Not : L ve R çıkış yönünü göstermektedir. / Note: L and R shows that output direction. / Hinweis: L und R geben die Ausgangsrichtung an.

TR ÜRÜNLERİMİZ | EN OUR PRODUCTS | DE UNSERE PRODUKTE

10) **PKD 1390... ÇMA / B14** - 63 M / 4
Çift mil çıkışlı, Ayak montajlı, Üç kademeli, B14 Flanşlı, Helisel konik dişlili, Motorlu redüktör
Solid shaft on both sides, Foot mounted, Triple reduction, Flange B14, Helical bevel gear unit, With motor
Doppelseitige Abtriebswelle, Fußbefestigung, dreistufig, B14 Flansch, Kegelstirnradgetriebe, Mit motor

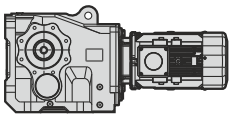
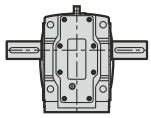

PKD 1390... ÇMA / B14 - W
Çift mil çıkışlı, Ayak montajlı, Üç kademeli, B14 Flanşlı, Helisel konik dişlili, W kovanlı redüktör
Solid shaft on both sides, Foot mounted, Triple reduction, Flange B14, Helical bevel gear unit, With W adapter
Doppelseitige Abtriebswelle, Fußbefestigung, dreistufig, B14 Flansch, Kegelstirnradgetriebe, Mit W-Adapter

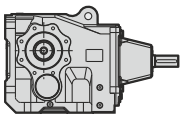
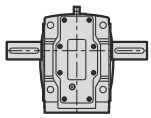

PKD 1390... ÇMA / B14 - IEC 63
Çift mil çıkışlı, Ayak montajlı, Üç kademeli, B14 Flanşlı, Helisel konik dişlili, IEC adaptörlü redüktör
Solid shaft on both sides, Foot mounted, Triple reduction, Flange B14, Helical bevel gear unit, With IEC adapter
Doppelseitige Abtriebswelle, Fußbefestigung, dreistufig, B14 Flansch, Kegelstirnradgetriebe, Mit IEC-adapter

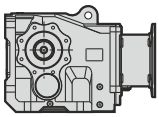
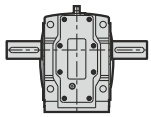

PKD 1390... ÇMA / B14 - PAM 63
Çift mil çıkışlı, Ayak montajlı, Üç kademeli, B14 Flanşlı, Helisel konik dişlili, PAM adaptörlü redüktör
Solid shaft on both sides, Foot mounted, Triple reduction, Flange B14, Helical bevel gear unit, With PAM adapter
Doppelseitige Abtriebswelle, Fußbefestigung, dreistufig, B14 Flansch, Kegelstirnradgetriebe, Mit PAM adapter

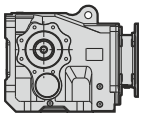
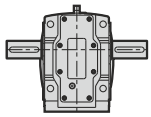

---

11) **PKD 1390... DA / KS-B14** - 63 M / 4 **R**
Delik milli, Ayak montajlı, Konik sıktırmalı, Üç kademeli, B14 flanşlı, Helisel konik dişlili, Motorlu redüktör
Hollow shaft, Foot mounted, Shrink disc connecter, Triple reduction, Flange B14, Helical bevel gear unit, With motor
Hohlwelle, Fußbefestigung, Schrumpfscheibe, dreistufig, B14 Flansch, Kegelstirnradgetriebe, Mit motor

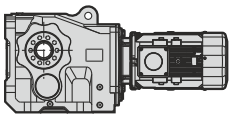
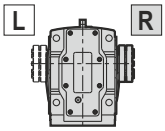

PKD 1390... DA / KS-B14 - W **R**
Delik milli, Ayak montajlı, Konik sıktırmalı, Üç kademeli, B14 flanşlı, Helisel konik dişlili, W kovanlı redüktör
Hollow shaft, Foot mounted, Shrink disc connecter, Triple reduction, Flange B14, Helical bevel gear unit, With W adapter
Hohlwelle, Fußbefestigung, Schrumpfscheibe, dreistufig, B14 Flansch, Kegelstirnradgetriebe, Mit W-Adapter

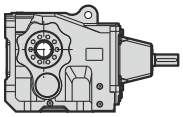
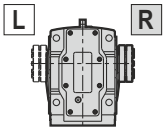

PKD 1390... DA / KS-B14 - IEC 63 **R**
Delik milli, Ayak montajlı, Konik sıktırmalı, Üç kademeli, B14 flanşlı, Helisel konik dişlili, IEC adaptörlü redüktör
Hollow shaft, Foot mounted, Shrink disc connecter, Triple reduction, Flange B14, Helical bevel gear unit, With IEC adapter
Hohlwelle, Fußbefestigung, Schrumpfscheibe, dreistufig, B14 Flansch, Kegelstirnradgetriebe, Mit IEC-adapter

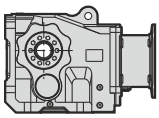
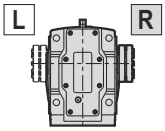

PKD 1390... DA / KS-B14 - PAM 63 **R**
Delik milli, Ayak montajlı, Konik sıktırmalı, Üç kademeli, B14 flanşlı, Helisel konik dişlili, PAM adaptörlü redüktör
Hollow shaft, Foot mounted, Shrink disc connecter, Triple reduction, Flange B14, Helical bevel gear unit, With PAM adapter
Hohlwelle, Fußbefestigung, Schrumpfscheibe, dreistufig, B14 Flansch, Kegelstirnradgetriebe, Mit PAM adapter

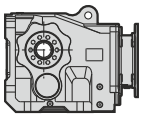
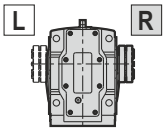

Not : L ve R çıkış yönünü göstermektedir.
Note: L and R shows that output direction.
Hinweis: L und R geben die Ausgangsrichtung an.

TR ÜRÜNLERİMİZ | EN OUR PRODUCTS | DE UNSERE PRODUKTE

1) PKD B 0290... DG / B14 - 63 M / 4

Delik milli, Gövdeden montajlı, İki kademeli, B14 flanşlı, Helisel konik dişlili, Motorlu redüktör
Hollow shaft, Case mounted, Double reduction, Flange B14, Helical bevel gear unit, With motor
Hohlwelle, Gehäuse Flanschmontage, zweistufig, B14 Flansch, Kegelstirnradgetriebe, Mit motor

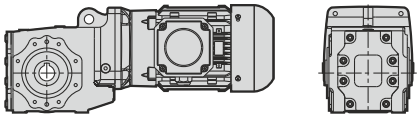

PKD B 0290... DG / B14 - W

Delik Milli, Gövdeden Montajlı, İki Kademeli, B14 flanşlı, Helisel konik dişlili, W kovanlı redüktör
Hollow shaft, Case mounted, Double reduction, Flange B14, Helical bevel gear unit, With W adapter
Hohlwelle, Gehäuse Flanschmontage, zweistufig, B14 Flansch, Kegelstirnradgetriebe, Mit W-Adapter

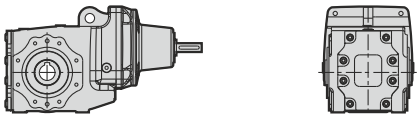

PKD B 0290... DG / B14 - IEC 63

Delik milli, Gövdeden montajlı, İki kademeli, B14 flanşlı, Helisel konik dişlili, IEC adaptörlü redüktör
Hollow shaft, Case mounted, Double reduction, Flange B14, Helical bevel gear unit, With IEC adapter
Hohlwelle, Gehäuse Flanschmontage, zweistufig, B14 Flansch, Kegelstirnradgetriebe, Mit IEC-adapter

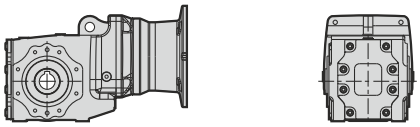

PKD B 0290... DG / B14 - PAM 63

Delik milli, Gövdeden montajlı, İki kademeli, B14 flanşlı, Helisel konik dişlili, PAM adaptörlü redüktör
Hollow shaft, Case mounted, Double reduction, Flange B14, Helical bevel gear unit, With PAM adapter
Hohlwelle, Gehäuse Flanschmontage, zweistufig, B14 Flansch, Kegelstirnradgetriebe, Mit PAM adapter

---

2) PKD B 0290... DG / KS-B14 - 63 M / 4 R

Delik milli, Gövdeden montajlı, Konik sıktırmalı, İki kademeli, B14 flanşlı, Helisel konik dişlili, Motorlu redüktör
Hollow shaft, Case mounted, Shrink disc connector, Double reduction, Flange B14, Helical bevel gear unit, With motor.
Hohlwelle, Gehäuse Flanschmontage, Schrumpfscheibe, zweistufig, B14 Flansch, Kegelstirnradgetriebe, Mit motor

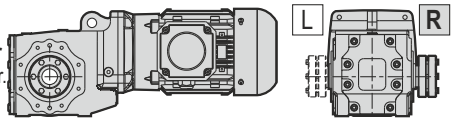

PKD B 0290... DG / KS-B14 - W R

Delik milli, Gövdeden montajlı, Konik sıktırmalı, İki kademeli, B14 flanşlı, Helisel konik dişlili, W kovanlı redüktör
Hollow shaft, Case mounted, Shrink disc connector, Double reduction, Flange B14, Helical bevel gear unit,
With W adapter
Hohlwelle, Gehäuse Flanschmontage, Schrumpfscheibe, zweistufig, B14 Flansch, Kegelstirnradgetriebe, Mit W-Adapter

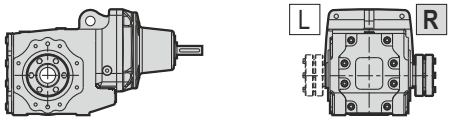

PKD B 0290... DG / KS-B14 - IEC 63 R

Delik milli, Gövdeden montajlı, Konik sıktırmalı, İki kademeli, B14 flanşlı, Helisel konik dişlili, IEC adaptörlü redüktör
Hollow shaft, Case mounted, Shrink disc connector, Double reduction, Flange B14, Helical bevel gear unit,
With IEC adapter
Hohlwelle, Gehäuse Flanschmontage, Schrumpfscheibe, zweistufig, B14 Flansch, Kegelstirnradgetriebe, Mit IEC-adapter

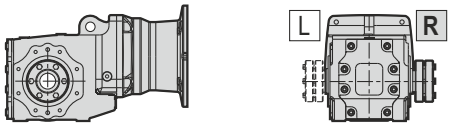

PKD B 0290... DG / KS-B14 - PAM 63 R

Delik milli, Gövdeden montajlı, Konik sıktırmalı, İki kademeli, B14 flanşlı, Helisel konik dişlili, PAM adaptörlü redüktör
Hollow shaft, Case mounted, Shrink disc connector, Double reduction, Flange B14, Helical bevel gear unit,
With PAM adapter
Hohlwelle, Gehäuse Flanschmontage, Schrumpfscheibe, zweistufig, B14 Flansch, Kegelstirnradgetriebe, Mit PAM adapter

---

3) PKD B 0290... TMG / B14 - 63 M / 4 R

Tek mil çıkışlı, Gövdeden montajlı, İki kademeli, B14 flanşlı, Helisel konik dişlili, Motorlu redüktör
Solid shaft, Case mounted, Double reduction, Flange B14, Helical bevel gear unit, With motor
Einseitige Abtriebswelle, Gehäuse Flanschmontage, zweistufig, B14 Flansch, Kegelstirnradgetriebe, Mit motor

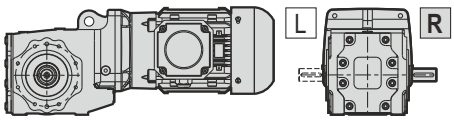

PKD B 0290... TMG / B14 - W R

Tek mil çıkışlı, Gövdeden montajlı, İki kademeli, B14 flanşlı, Helisel konik dişlili, W kovanlı redüktör
Solid shaft, Case mounted, Double reduction, Flange B14, Helical bevel gear unit, With W adapter
Einseitige Abtriebswelle, Gehäuse Flanschmontage, zweistufig, B14 Flansch, Kegelstirnradgetriebe, Mit W-Adapter

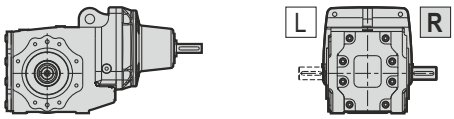

PKD B 0290... TMG / B14 - IEC 63 R

Tek mil çıkışlı, Gövdeden montajlı, İki kademeli, B14 flanşlı, Helisel konik dişlili, IEC adaptörlü redüktör
Solid shaft, Case mounted, Double reduction, Flange B14, Helical bevel gear unit, With IEC adapter
Einseitige Abtriebswelle, Gehäuse Flanschmontage, zweistufig, B14 Flansch, Kegelstirnradgetriebe, Mit IEC-adapter

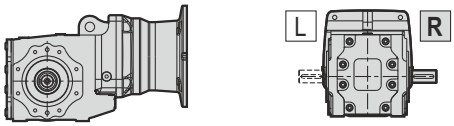

PKD B 0290... TMG / B14 - PAM 63 R

Tek mil çıkışlı, Gövdeden montajlı, İki kademeli, B14 flanşlı, Helisel konik dişlili, PAM adaptörlü redüktör
Solid shaft, Case mounted, Double reduction, Flange B14, Helical bevel gear unit, With PAM adapter
Einseitige Abtriebswelle, Gehäuse Flanchmontage, zweistufig, B14 Flansch, Kegelstirnradgetriebe, Mit PAM adapter

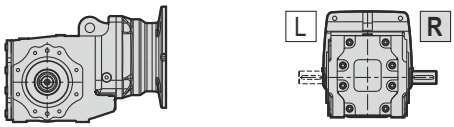

Not : L ve R çıkış yönünü göstermektedir. / Note: L and R shows that output direction. / Hinweis: L und R geben die Ausgangsrichtung an.

TR ÜRÜNLERİMİZ | EN OUR PRODUCTS | DE UNSERE PRODUKTE

4) PKD B 0290... TMG / B5 - 63 M / 4
Tek mil çıkışlı, Gövdeden montajlı, B5 flanşlı, İki kademeli, Helisel konik dişlili, Motorlu redüktör
Solid shaft, Case mounted, Flange B5, Double reduction, Helical bevel gear unit, With motor
Einseitige Abtriebswelle, Gehäuse Flanschmontage, B5 Flansch, zweistufig, Kegelstirnradgetriebe, Mit motor

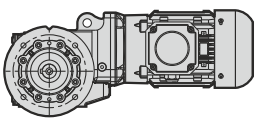
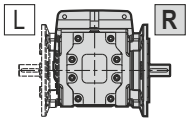

PKD B 0290... TMG / B5 - W
Tek mil çıkışlı, Gövdeden montajlı, B5 flanşlı, İki kademeli, Helisel konik dişlili, W kovanlı redüktör
Solid shaft, Case mounted, Flange B5, Double reduction, Helical bevel gear unit, With W adapter
Einseitige Abtriebswelle, Gehäuse Flanschmontage, B5 Flansch, zweistufig, Kegelstirnradgetriebe, Mit W-Adapter

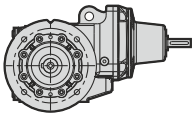
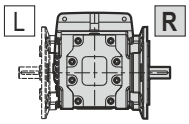

PKD B 0290... TMG / B5 - IEC 63
Tek mil çıkışlı, Gövdeden montajlı, B5 flanşlı, İki kademeli, Helisel konik dişlili, IEC adaptörlü redüktör
Solid shaft, Case mounted, Flange B5, Double reduction, Helical bevel gear unit, With IEC adapter
Einseitige Abtriebswelle, Gehäuse Flanschmontage, B5 Flansch, zweistufig, Kegelstirnradgetriebe, Mit IEC-adapter

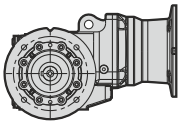
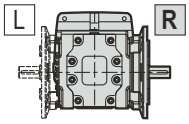

PKD B 0290... TMG / B5 - PAM 63
Tek mil çıkışlı, Gövdeden montajlı, B5 flanşlı, İki kademeli, Helisel konik dişlili, PAM adaptörlü redüktör
Solid shaft, Case mounted, Flange B5, Double reduction, Helical bevel gear unit, With PAM adapter
Einseitige Abtriebswelle, Gehäuse Flanschmontage, B5 Flansch, zweistufig, Kegelstirnradgetriebe, Mit PAM adapter

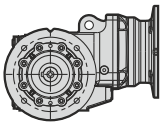
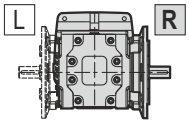

---

5) PKD B 0290... DG / B5 - 63 M / 4 R
Delik milli, Gövdeden montajlı, B5 flanşlı, İki kademeli, Helisel konik dişlili, Motorlu redüktör
Hollow shaft, Case mounted, Flange B5, Double reduction, Helical bevel gear unit, With motor
Hohlwelle, Gehäuse Flanschmontage, B5 Flansch, zweistufig, Kegelstirnradgetriebe, Mit motor

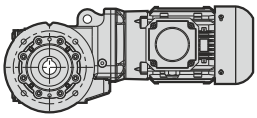
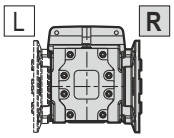

PKD B 0290... DG / B5 - W R
Delik milli, Gövdeden montajlı, B5 flanşlı, İki kademeli, Helisel konik dişlili, W kovanlı redüktör
Hollow shaft, Case mounted, Flange B5, Double reduction, Helical bevel gear unit, With W adapter
Hohlwelle, Gehäuse Flanschmontage, B5 Flansch, zweistufig, Kegelstirnradgetriebe, Mit W-Adapter

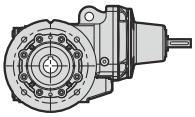
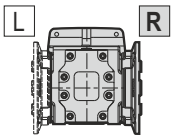

PKD B 0290... DG / B5 - IEC 63 R
Delik milli, Gövdeden montajlı, B5 flanşlı, İki kademeli, Helisel konik dişlili, IEC adaptörlü redüktör
Hollow shaft, Case mounted, Flange B5, Double reduction, Helical bevel gear unit, With IEC adapter
Hohlwelle, Gehäuse Flanschmontage, B5 Flansch, zweistufig, Kegelstirnradgetriebe, Mit IEC-adapter

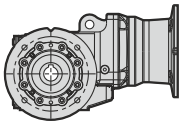
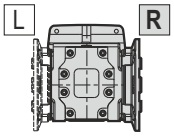

PKD B 0290... DG / B5 - PAM 63 R
Delik milli, Gövdeden montajlı, B5 flanşlı, İki kademeli, Helisel konik dişlili, PAM adaptörlü redüktör
Hollow shaft, Case mounted, Flange B5, Double reduction, Helical bevel gear unit, With PAM adapter
Hohlwelle, Gehäuse Flanschmontage, B5 Flansch, zweistufig, Kegelstirnradgetriebe, Mit PAM adapter

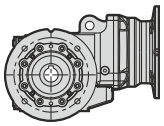
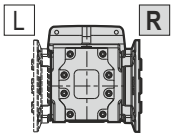

---

6) PKD B 0290... DG / KS-B5 - 63 M / 4 R
Delik milli, Gövdeden montajlı, Konik sıktırmalı, B5 flanşlı, İki kademeli, Helisel konik dişlili, Motorlu redüktör
Hollow shaft, Case mounted, Shrink disc connector, Flange B5, Double reduction, Helical bevel gear unit, With motor
Hohlwelle, Gehäuse Flanchmontage, Schrumpfscheibe B5 Flansch, zweistufig, Kegelstirnradgetriebe, Mit motor

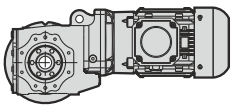
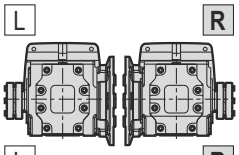

PKD B 0290... DG / KS-B5 - W R
Delik milli, Gövdeden montajlı, Konik sıktırmalı, B5 flanşlı, İki kademeli, Helisel konik dişlili, W adaptörlü redüktör
Hollow shaft, Case mounted, Shrink disc connector, Flange B5, Double reduction, Helical bevel gear unit, With W adapter
Hohlwelle, Gehäuse Flanchmontage, Schrumpfscheibe B5 Flansch, zweistufig, Kegelstirnradgetriebe, Mit W-Adapter

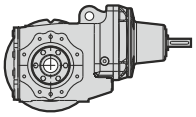
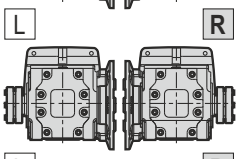

PKD B 0290... DG / KS-B5 - IEC 63 R
Delik milli, Gövdeden montajlı, Konik sıktırmalı, B5 flanşlı, İki kademeli, Helisel konik dişlili, IEC adaptörlü redüktör
Hollow shaft, Case mounted, Shrink disc connector, Flange B5, Double reduction, Helical bevel gear unit, With IEC adapter
Hohlwelle, Gehäuse Flanchmontage, Schrumpfscheibe B5 Flansch, zweistufig, Kegelstirnradgetriebe, Mit IEC-adapter

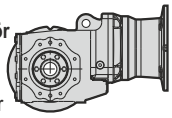
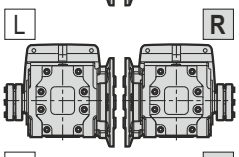

PKD B 0290... DG / KS-B5 - PAM 63 R
Delik milli, Gövdeden montajlı, Konik sıktırmalı, B5 flanşlı, İki kademeli, Helisel konik dişlili, PAM adaptörlü redüktör
Hollow shaft, Case mounted, Shrink disc connector, Flange B5, Double reduction, Helical bevel gear unit, With PAM adapter
Hohlwelle, Gehäuse Flanchmontage, Schrumpfscheibe B5 Flansch, zweistufig, Kegelstirnradgetriebe, Mit PAM adapter

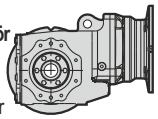
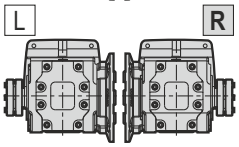

Not : L ve R çıkış yönünü göstermektedir. / Note: L and R shows that output direction. / Hinweis: L und R geben die Ausgangsrichtung an.

TR ÜRÜNLERİMİZ | EN OUR PRODUCTS | DE UNSERE PRODUKTE

9) PKD B 0290... DG / TK - 63 M / 4 **R**

Delik milli, Gövdeden montajlı, Tork kollu, İki kademeli, Helisel konik dişlili, Motorlu redüktör
Hollow shaft, Case mounted, Torque arm, Double reduction, Helical bevel gear unit, With motor
Hohlwelle, Gehäuse Flanschmontage, Drehmomentstütze, zweistufig, Kegelstirnradgetriebe, Mit motor

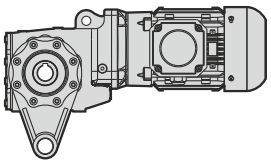

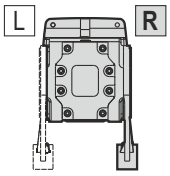

PKD B 0290... DG / TK - W **R**

Delik milli, Gövdeden montajlı, Tork kollu, İki kademeli, Helisel konik dişlili, W kovanlı redüktör
Hollow shaft, Case mounted, Torque arm, Double reduction, Helical bevel gear unit, With W adapter
Hohlwelle, Gehäuse Flanschmontage, Drehmomentstütze, zweistufig, Kegelstirnradgetriebe, Mit W-Adapter

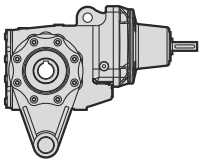

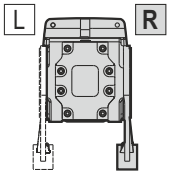

PKD B 0290... DG / TK - IEC **R**

Delik milli, Gövdeden montajlı, Tork kollu, İki kademeli, Helisel konik dişlili, IEC adaptörlü redüktör
Hollow shaft, Case mounted, Torque arm, Double reduction, Helical bevel gear unit, With IEC adapter
Hohlwelle, Gehäuse Flanschmontage, Drehmomentstütze, zweistufig, Kegelstirnradgetriebe, Mit IEC-adapter

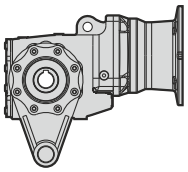

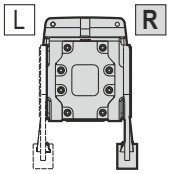

PKD B 0290... DG / TK - IEC **R**

Delik milli, Gövdeden montajlı, Tork kollu, İki kademeli, Helisel konik dişlili, IEC adaptörlü redüktör
Hollow shaft, Case mounted, Torque arm, Double reduction, Helical bevel gear unit, With IEC adapter
Hohlwelle, Gehäuse Flanschmontage, Drehmomentstütze, zweistufig, Kegelstirnradgetriebe, Mit PAM adapter

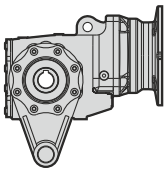

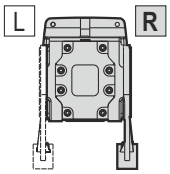

---

10) PKD B 0290... DG / KS-TK - 63 M /4 **R**

Delik milli, Gövdeden montajlı, Konik sıktırmalı, Tork kollu, İki kademeli, Helisel konik dişlili, Motorlu redüktör
Hollow shaft, Case mounted, Shrink disc connector, Torque arm, Double reduction, Helical bevel gear unit, With motor
Hohlwelle, Gehäuse Flanschmontage, Schrumpfscheibe, Drehmomentstütze, zweistufig, Kegelstirnradgetriebe, Mit motor

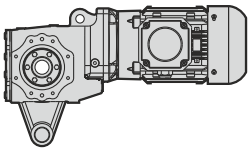

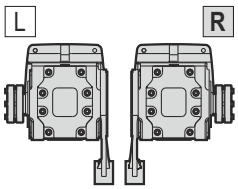

PKD 1390... DG / KS-TK - W **R**

Delik milli, Gövdeden montajlı, Konik sıktırmalı, Tork kollu, İki kademeli, Helisel konik dişlili, W kovanlı redüktör
Hollow shaft, Case mounted, Shrink disc connector, Torque arm, Double reduction, Helical bevel gear unit, With W adapter
Hohlwelle, Gehäuse Flanschmontage, Schrumpfscheibe, Drehmomentstütze, zweistufig, Kegelstirnradgetriebe, Mit W-Adapter

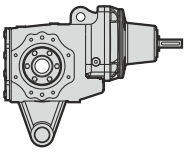

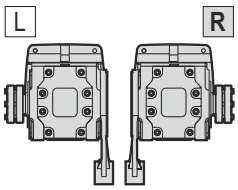

PKD B 0290... DG / KS-TK - IEC **R**

Delik milli, Gövdeden montajlı, Konik sıktırmalı, Tork kollu, İki kademeli, Helisel konik dişlili, IEC adaptörlü redüktör
Hollow shaft, Case mounted, Shrink disc connector, Torque arm, Double reduction, Helical bevel gear unit, With IEC adapter
Hohlwelle, Gehäuse Flanschmontage, Schrumpfscheibe, Drehmomentstütze, zweistufig, Kegelstirnradgetriebe, Mit IEC-adapter

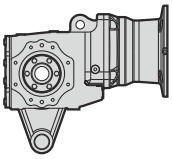

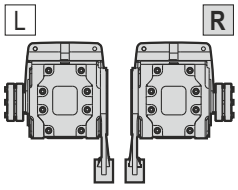

PKD B 0290... DG / KS-TK - PAM **R**

Delik milli, Gövdeden montajlı, Konik sıktırmalı, Tork kollu, İki kademeli, Helisel konik dişlili, PAM adaptörlü redüktör
Hollow shaft, Case mounted, Shrink disc connector, Torque arm, Double reduction, Helical bevel gear unit, With PAM adapter
Hohlwelle, Gehäuse Flanschmontage, Schrumpfscheibe, Drehmomentstütze, zweistufig, Kegelstirnradgetriebe, Mit PAM adapter

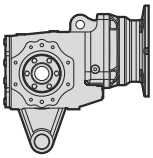

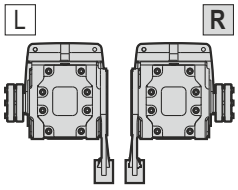

Not : L ve R çıkış yönünü göstermektedir. / Note: L and R shows that output direction. / Hinweis: L und R geben die Ausgangsrichtung an.

TR ÜRÜNLERİMİZ | EN OUR PRODUCTS | DE UNSERE PRODUKTE

1) PKD B 1390... DG / B14 - 63 M / 4

Delik milli, Gövdeden montajlı, Üç kademeli, B14 flanşlı, Helisel konik dişlili, Motorlu redüktör
Hollow shaft, Case mounted, Triple reduction, Flange B14, Helical bevel gear unit, With motor
Hohlwelle, Gehäuse Flanschmontage, dreistufig, B14 Flansch, Kegelstirnradgetriebe, Mit motor

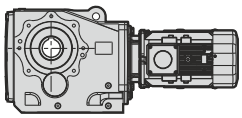

PKD 1390... DG / B14 - W

Delik Milli, Gövdeden Montajlı, Üç Kademeli, B14 flanşlı, Helisel konik dişlili, W kovanlı redüktör
Hollow shaft, Case mounted, Triple reduction, Flange B14, Helical bevel gear unit, With W adapter
Hohlwelle, Gehäuse Flanschmontage, dreistufig, B14 Flansch, Kegelstirnradgetriebe, Mit W-Adapter

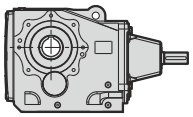
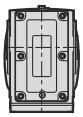

PKD 1390... DG / B14 - IEC 63

Delik milli, Gövdeden montajlı, Üç kademeli, B14 flanşlı, Helisel konik dişlili, IEC adaptörlü redüktör
Hollow shaft, Case mounted, Triple reduction, Flange B14, Helical bevel gear unit, With IEC adapter
Hohlwelle, Gehäuse Flanschmontage, dreistufig, B14 Flansch, Kegelstirnradgetriebe, Mit IEC-adapter

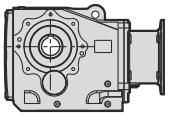
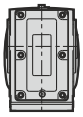

PKD 1390... DG / B14 - PAM 63

Delik milli, Gövdeden montajlı, Üç kademeli, B14 flanşlı, Helisel konik dişlili, PAM adaptörlü redüktör
Hollow shaft, Case mounted, Triple reduction, Flange B14, Helical bevel gear unit, With PAM adapter
Hohlwelle, Gehäuse Flanschmontage, dreistufig, B14 Flansch, Kegelstirnradgetriebe, Mit PAM adapter

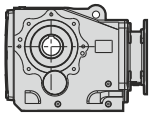
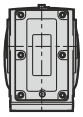

---

2) PKD 1390... DG / KS-B14 - 63 M / 4 R

Delik milli, Gövdeden montajlı, Konik sıktırmalı, Üç kademeli, B14 flanşlı, Helisel konik dişlili, Motorlu redüktör
Hollow shaft, Case mounted, Shrink disc connector, Triple reduction, Flange B14, Helical bevel gear unit, With motor
Hohlwelle, Gehäuse Flanschmontage, Schrumpfscheibe, dreistufig, B14 Flansch, Kegelstirnradgetriebe, Mit motor

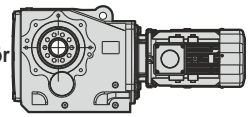
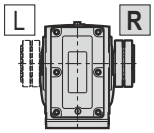

PKD 1390... DG / KS-B14 - W R

Delik milli, Gövdeden montajlı, Konik sıktırmalı, Üç kademeli, B14 flanşlı, Helisel konik dişlili, W kovanlı redüktör
Hollow shaft, Case mounted, Shrink disc connector, Triple reduction, Flange B14, Helical bevel gear unit, With W adapter
Hohlwelle, Gehäuse Flanschmontage, Schrumpfscheibe, dreistufig, B14 Flansch, Kegelstirnradgetriebe, Mit W-Adapter

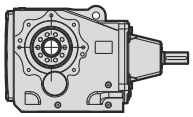
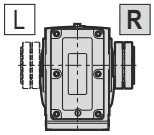

PKD 1390... DG / KS-B14 - IEC 63 R

Delik milli, Gövdeden montajlı, Konik sıktırmalı, Üç kademeli, B14 flanşlı, Helisel konik dişlili, IEC adaptörlü redüktör
Hollow shaft, Case mounted, Shrink disc connector, Triple reduction, Flange B14, Helical bevel gear unit, With IEC adapter
Hohlwelle, Gehäuse Flanschmontage, Schrumpfscheibe, dreistufig, B14 Flansch, Kegelstirnradgetriebe, Mit IEC-adapter

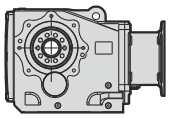
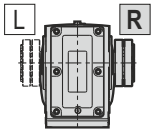

PKD 1390... DG / KS-B14 - PAM 63 R

Delik milli, Gövdeden montajlı, Konik sıktırmalı, Üç kademeli, B14 flanşlı, Helisel konik dişlili, PAM adaptörlü redüktör
Hollow shaft, Case mounted, Shrink disc connector, Triple reduction, Flange B14, Helical bevel gear unit, With PAM adapter
Hohlwelle, Gehäuse Flanschmontage, Schrumpfscheibe, dreistufig, B14 Flansch, Kegelstirnradgetriebe, Mit PAM adapter

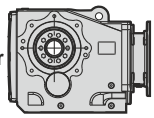
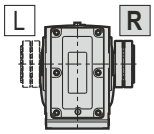

---

3) PKD 1390...TMG / B14 - 63 M / 4 R

Tek mil çıkışlı, Gövdeden montajlı, Üç kademeli, B14 flanşlı, Helisel konik dişlili, Motorlu redüktör
Solid shaft, Case mounted, Triple reduction, Flange B14, Helical bevel gear unit, With motor
Einseitige Abtriebswelle, Gehäuse Flanschmontage, dreistufig, B14 Flansch, Kegelstirnradgetriebe, Mit motor

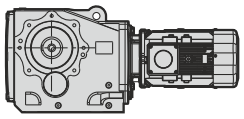
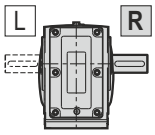

PKD 1390... TMG / B14 - W R

Tek mil çıkışlı, Gövdeden montajlı, Üç kademeli, B14 flanşlı, Helisel konik dişlili, W kovanlı redüktör
Solid shaft, Case mounted, Triple reduction, Flange B14, Helical bevel gear unit, With W adapter
Einseitige Abtriebswelle, Gehäuse Flanschmontage, dreistufig, B14 Flansch, Kegelstirnradgetriebe, Mit W-Adapter

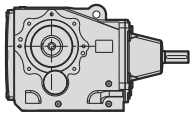
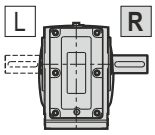

PKD 1390... TMG / B14 - IEC 63 R

Tek mil çıkışlı, Gövdeden montajlı, Üç kademeli, B14 flanşlı, Helisel konik dişlili, IEC adaptörlü redüktör
Solid shaft, Case mounted, Triple reduction, Flange B14, Helical bevel gear unit, With IEC adapter
Einseitige Abtriebswelle, Gehäuse Flanschmontage, dreistufig, B14 Flansch, Kegelstirnradgetriebe, Mit IEC-adapter

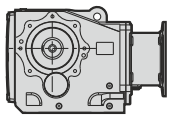
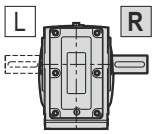

PKD 1390... TMG / B14 - PAM 63 R

Tek mil çıkışlı, Gövdeden montajlı, Üç kademeli, B14 flanşlı, Helisel konik dişlili, PAM adaptörlü redüktör
Solid shaft, Case mounted, Triple reduction, Flange B14, Helical bevel gear unit, With PAM adapter
Einseitige Abtriebswelle, Gehäuse Flanschmontage, dreistufig, B14 Flansch, Kegelstirnradgetriebe, Mit PAM adapter

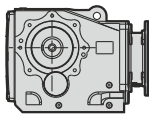
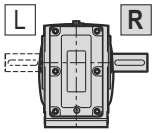

Not : L ve R çıkış yönünü göstermektedir. / Note: L and R shows that output direction. / Hinweis: L und R geben die Ausgangsrichtung an.

TR ÜRÜNLERİMİZ | EN OUR PRODUCTS | DE UNSERE PRODUKTE

4) **PKD 1390... TMG / B5** - 63 M / 4
Tek mil çıkışlı, Gövdeden montajlı, B5 flanşlı, Üç kademeli, Helisel konik dişlili, Motorlu redüktör
Solid shaft, Case mounted, Flange B5, Triple reduction, Helical bevel gear unit, With motor
Einseitige Abtriebswelle, Gehäuse Flanschmontage, B5 Flansch, dreistufig, Kegelstirnradgetriebe, Mit motor

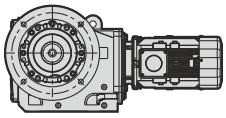
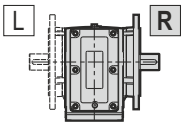

PKD 1390... TMG / B5 - W
Tek mil çıkışlı, Gövdeden montajlı, B5 flanşlı, Üç kademeli, Helisel konik dişlili, W kovanlı redüktör
Solid shaft, Case mounted, Flange B5, Triple reduction, Helical bevel gear unit, With W adapter
Einseitige Abtriebswelle, Gehäuse Flanschmontage, B5 Flansch, dreistufig, Kegelstirnradgetriebe, Mit W-Adapter

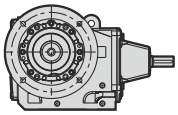
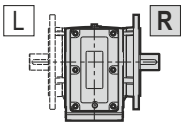

PKD 1390... TMG / B5 - IEC 63
Tek mil çıkışlı, Gövdeden montajlı, B5 flanşlı, Üç kademeli, Helisel konik dişlili, IEC adaptörlü redüktör
Solid shaft, Case mounted, Flange B5, Triple reduction, Helical bevel gear unit, With IEC adapter
Einseitige Abtriebswelle, Gehäuse Flanschmontage, B5 Flansch, dreistufig, Kegelstirnradgetriebe, Mit IEC-adapter

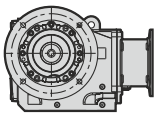
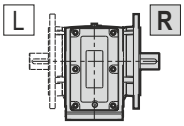

PKD 1390... TMG / B5 - PAM 63
Tek mil çıkışlı, Gövdeden montajlı, B5 flanşlı, Üç kademeli, Helisel konik dişlili, PAM adaptörlü redüktör
Solid shaft, Case mounted, Flange B5, Triple reduction, Helical bevel gear unit, With PAM adapter
Einseitige Abtriebswelle, Gehäuse Flanschmontage, B5 Flansch, dreistufig, Kegelstirnradgetriebe, Mit PAM adapter

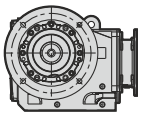
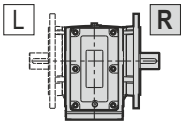

---

5) **PKD 1390... DG / B5** - 63 M / 4 R
Delik milli, Gövdeden montajlı, B5 flanşlı, Üç kademeli, Helisel konik dişlili, Motorlu redüktör
Hollow shaft, Case mounted, Flange B5, Triple reduction, Helical bevel gear unit, With motor
Hohlwelle, Gehäuse Flanschmontage, B5 Flansch, dreistufig, Kegelstirnradgetriebe, Mit motor

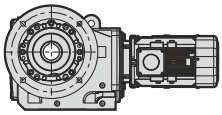
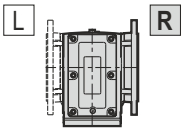

PKD 1390... DG / B5 - W R
Delik milli, Gövdeden montajlı, B5 flanşlı, Üç kademeli, Helisel konik dişlili, W kovanlı redüktör
Hollow shaft, Case mounted, Flange B5, Triple reduction, Helical bevel gear unit, With W adapter
Hohlwelle, Gehäuse Flanschmontage, B5 Flansch, dreistufig, Kegelstirnradgetriebe, Mit W-Adapter

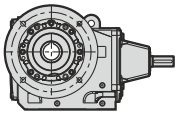
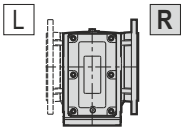

PKD 1390... DG / B5 - IEC 63 R
Delik milli, Gövdeden montajlı, B5 flanşlı,Üç kademeli, Helisel konik dişlili, IEC adaptörlü redüktör
Hollow shaft, Case mounted, Flange B5, Triple reduction, Helical bevel gear unit, With IEC adapter
Hohlwelle, Gehäuse Flanschmontage, B5 Flansch, dreistufig, Kegelstirnradgetriebe, Mit IEC-adapter

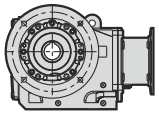
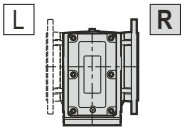

PKD 1390... DG / B5 - PAM 63 R
Delik milli, Gövdeden montajlı, B5 flanşlı,Üç kademeli, Helisel konik dişlili, PAM adaptörlü redüktör
Hollow shaft, Case mounted, Flange B5, Triple reduction, Helical bevel gear unit, With PAM adapter
Hohlwelle, Gehäuse Flanschmontage, B5 Flansch, dreistufig, Kegelstirnradgetriebe, Mit PAM adapter

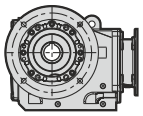
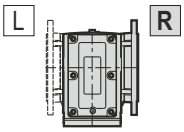

---

6) **PKD 1390... DG / KS-B5** - 63 M / 4 R
Delik milli, Gövdeden montajlı, Konik sıktırmalı, B5 flanşlı, Üç kademeli, Helisel konik dişlili, Motorlu redüktör
Hollow shaft, Case mounted, Shrink disc connector, Flange B5, Triple reduction,Helical bevel gear unit, With motor
Hohlwelle, Gehäuse Flanchmontage, Schrumpfscheibe B5 Flansch, dreistufig, Kegelstirnradgetriebe, Mit motor

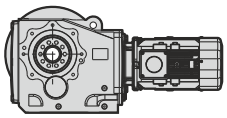
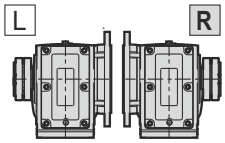

PKD 1390... DG / KS-B5 - W R
Delik milli, Gövdeden montajlı, Konik sıktırmalı, B5 flanşlı, Üç kademeli, Helisel konik dişlili, W kovanlı redüktör
Hollow shaft, Case mounted, Shrink disc connector, Flange B5, Triple reduction, Helical bevel gear unit, With W adapter
Hohlwelle, Gehäuse Flanchmontage, Schrumpfscheibe B5 Flansch, dreistufig, Kegelstirnradgetriebe, Mit W-Adapter

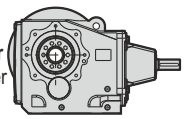
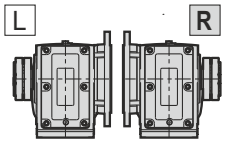

PKD 1390... DG / KS-B5 - IEC 63 R
Delik milli, Gövdeden montajlı, Konik sıktırmalı, B5 flanşlı, Üç kademeli, Helisel konik dişlili, IEC adaptörlü redüktör
Hollow shaft, Case mounted, Shrink disc connector, Flange B5, Triple reduction, Helical bevel gear unit, With IEC adapter
Hohlwelle, Gehäuse Flanchmontage, Schrumpfscheibe B5 Flansch, dreistufig, Kegelstirnradgetriebe, Mit IEC Adapter

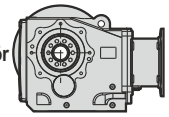
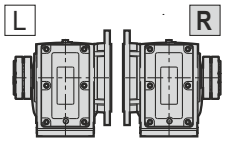

PKD 1390... DG / KS-B5 - PAM 63 R
Delik milli, Gövdeden montajlı, Konik sıktırmalı, B5 flanşlı, Üç kademeli, Helisel konik dişlili, PAM adaptörlü redüktör
Hollow shaft, Case mounted, Shrink disc connector, Flange B5, Triple reduction, Helical bevel gear unit, With PAM adapter
Hohlwelle, Gehäuse Flanchmontage, Schrumpfscheibe B5 Flansch, dreistufig, Kegelstirnradgetriebe, Mit PAM Adapter

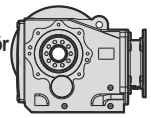
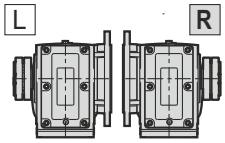

Not : L ve R çıkış yönünü göstermektedir. / Note: L and R shows that output direction. / Hinweis: L und R geben die Ausgangsrichtung an.

TR ÜRÜNLERİMİZ | EN OUR PRODUCTS | DE UNSERE PRODUKTE

7) **PKD 1390... DG / TKP-B14** - 63 M / 4

Delik milli, Gövdeden montajlı, Üç kademeli, Tork kolu platformu, B14 flanşlı, Helisel konik dişlili, Motorlu redüktör
Hollow shaft, Case mounted, Triple reduction, Torque arm platform, Flange B14, Helical bevel gear unit, With motor
Hohlwelle, Gehäuse Flanschmontage, dreistufig, Drehmomentstütze Plattform, B14 Flansch, Kegelstirnradgetriebe, Mit motor

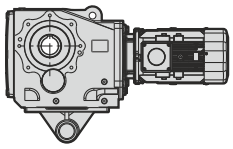
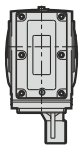

PKD 1390... DG / TKP-B14 - W

Delik milli, Gövdeden montajlı, Üç kademeli, Tork kolu platformu, B14 flanşlı, Helisel konik dişlili, W kovanlı redüktör
Hollow shaft, Case mounted, Triple reduction, Torque arm platform, Flange B14, Helical bevel gear unit, With W adapter
Hohlwelle, Gehäuse Flanschmontage, dreistufig, Drehmomentstütze Plattform, B14 Flansch, Kegelstirnradgetriebe, Mit W-Adapter

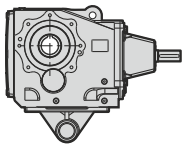
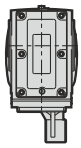

PKD 1390... DG / TKP-B14 - IEC 63

Delik milli, Gövdeden montajlı, Üç kademeli, Tork kolu platformu, B14 flanşlı, Helisel konik dişlili, IEC adaptörlü redüktör
Hollow shaft, Case mounted, Triple reduction, Torque arm platform, Flange B14, Helical bevel gear unit, With IEC adapter
Hohlwelle, Gehäuse Flanschmontage, dreistufig, Drehmomentstütze Plattform, B14 Flansch, Kegelstirnradgetriebe, Mit IEC-adapter

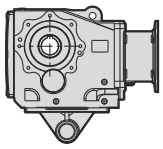
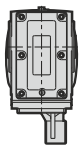

PKD 1390... DG / TKP-B14 - PAM 63

Delik milli, Gövdeden montajlı, Üç kademeli, Tork kolu platformu, B14 flanşlı, Helisel konik dişlili, PAM adaptörlü redüktör
Hollow shaft, Case mounted, Triple reduction, Torque arm platform, Flange B14, Helical bevel gear unit, With PAM adapter
Hohlwelle, Gehäuse Flanschmontage, dreistufig, Drehmomentstütze Plattform, B14 Flansch, Kegelstirnradgetriebe, Mit PAM adapter

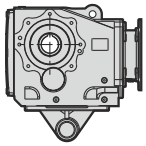
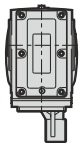

---

8) **PKD 1390... DG / KS-TKP-B14** - 63 M / 4 R

Delik milli, Gövdeden montajlı, Konik sıktırmalı, Üç kademeli, Tork kolu platformu, B14 flanşlı, Helisel konik dişlili, Motorlu redüktör
Hollow shaft, Case mounted, Shrink disc connector, Triple reduction, Torque arm platform, Flange B14, Helical bevel gear unit, With motor
Hohlwelle, Gehäuse Flanschmontage, Schrumpfscheibe, dreistufig, Drehmomentstütze Plattform, B14 Flansch, Kegelstirnradgetriebe, Mit motor

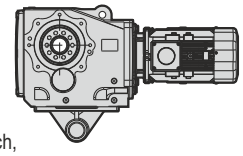
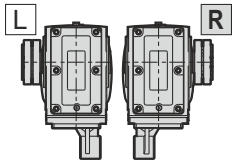

PKD 1390... DG / KS-TKP-B14 - W R

Delik milli, Gövdeden montajlı, Konik sıktırmalı, Üç kademeli, Tork kolu platformu, B14 flanşlı, Helisel konik dişlili, W kovanlı redüktör
Hollow shaft, Case mounted, Shrink disc connector, Triple reduction, Torque arm platform, Flange B14, Helical bevel gear unit, With W adapter
Hohlwelle, Gehäuse Flanschmontage, Schrumpfscheibe, dreistufig, Drehmomentstütze Plattform, B14 Flansch, Kegelstirnradgetriebe, Mit W-Adapter

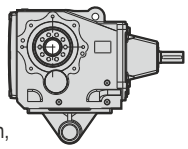
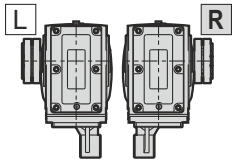

PKD 1390... DG / KS-TKP-B14 - IEC R

Delik milli, Gövdeden montajlı, Konik sıktırmalı, Üç kademeli, Tork kolu platformu, B14 flanşlı, Helisel konik dişlili, IEC adaptörlü redüktör
Hollow shaft, Case mounted, Shrink disc connector, Triple reduction, Torque arm platform,Flange B14, Helical bevel gear unit, With IEC adapter
Hohlwelle, Gehäuse Flanschmontage, Schrumpfscheibe, dreistufig, Drehmomentstütze Plattform, B14 Flansch, Kegelstirnradgetriebe, Mit IEC-adapter

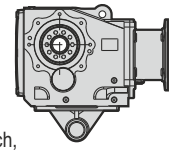
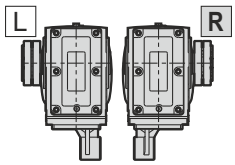

PKD 1390... DG / KS-TKP-B14 - PAM R

Delik milli, Gövdeden montajlı, Konik sıktırmalı, Üç kademeli, Tork kolu platformu, B14 flanşlı, Helisel konik dişlili, PAM adaptörlü redüktör
Hollow shaft, Case mounted, Shrink disc connector, Triple reduction, Torque arm platform, Flange B14, Helical bevel gear unit, With PAM adapter
Hohlwelle, Gehäuse Flanschmontage, Schrumpfscheibe, dreistufig, Drehmomentstütze Plattform, B14 Flansch, Kegelstirnradgetriebe, Mit PAM adapter

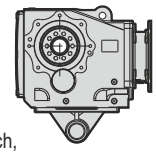
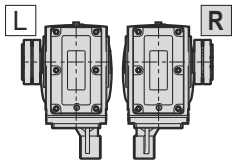

Not : L ve R çıkış yönünü göstermektedir. / Note: L and R shows that output direction. / Hinweis: L und R geben die Ausgangsrichtung an.

TR ÜRÜNLERİMİZ | EN OUR PRODUCTS | DE UNSERE PRODUKTE

9) PKD 1390... DG / KS-TK - 63 M / 4 **R**

Delik milli, Gövdeden montajlı, Konik sıktırmalı, Tork kollu, Üç kademeli, Helisel konik dişlili, Motorlu redüktör
Hollow shaft, Case mounted, Shrink disc connector, Torque arm, Triple reduction, Helical bevel gear unit, With motor
Hohlwelle, Gehäuse Flanschmontage, Schrumpfscheibe, Drehmomentstütze, dreistufig, Kegelstirnradgetriebe, Mit motor

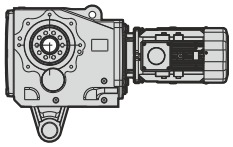

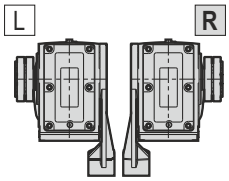

PKD 1390... DG / KS-TK - W **R**

Delik milli, Gövdeden montajlı, Konik sıktırmalı, Tork kollu, Üç kademeli, Helisel konik dişlili, W kovanlı redüktör
Hollow shaft, Case mounted, Shrink disc connector, Torque arm, Triple reduction, Helical bevel gear unit, With W adapter
Hohlwelle, Gehäuse Flanschmontage, Schrumpfscheibe, Drehmomentstütze, dreistufig, Kegelstirnradgetriebe, Mit W-Adapter

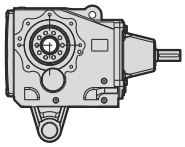

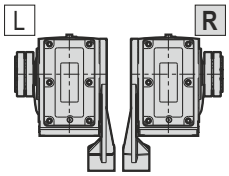

PKD 1390... DG / KS-TK - IEC **R**

Delik milli, Gövdeden montajlı, Konik sıktırmalı, Tork kollu, Üç kademeli, Helisel konik dişlili, IEC adaptörlü redüktör
Hollow shaft, Case mounted, Shrink disc connector, Torque arm, Triple reduction, Helical bevel gear unit, With IEC adapter
Hohlwelle, Gehäuse Flanschmontage, Schrumpfscheibe, Drehmomentstütze, dreistufig, Kegelstirnradgetriebe Mit IEC-adapter

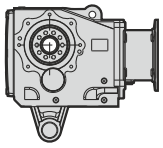

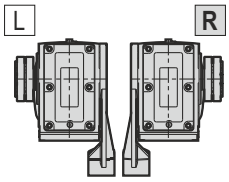

PKD 1390... DG / KS-TK - PAM **R**

Delik milli, Gövdeden montajlı, Konik sıktırmalı, Tork kollu, Üç kademeli, Helisel konik dişlili, PAM adaptörlü redüktör
Hollow shaft, Case mounted, Shrink disc connector, Torque arm, Triple reduction, Helical bevel gear unit, With PAM adapter
Hohlwelle, Gehäuse Flanschmontage, Schrumpfscheibe, Drehmomentstütze, dreistufig, Kegelstirnradgetriebe Mit PAM adapter

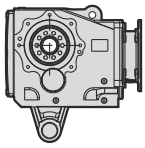

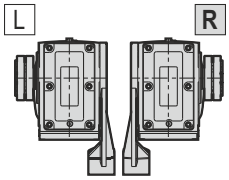

---

10) PKD 1390... DG / TK - 63 M / 4 **R**

Delik milli, Gövdeden montajlı, Tork kollu, Üç kademeli, Helisel konik dişlili, Motorlu redüktör
Hollow shaft, Case mounted, Torque arm,Triple reduction, Helical bevel gear unit, With motor
Hohlwelle, Gehäuse Flanschmontage, Drehmomentstütze, dreistufig, Kegelstirnradgetriebe, Mit motor

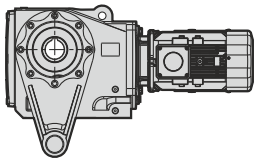

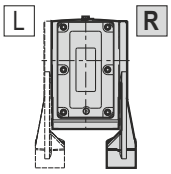

PKD 1390... DG / TK - W **R**

Delik milli, Gövdeden montajlı, Tork kollu, Üç kademeli, Helisel konik dişlili, W kovanlı redüktör
Hollow shaft, Case mounted, Torque arm, Triple reduction, Helical bevel gear unit, With W adapter
Hohlwelle, Gehäuse Flanschmontage, Drehmomentstütze, dreistufig, Kegelstirnradgetriebe Mit W-Adapter

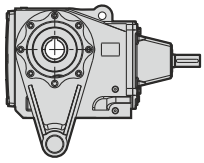

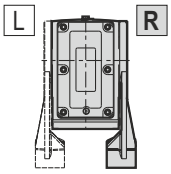

PKD 1390... DG / TK - IEC **R**

Delik milli, Gövdeden montajlı, Tork kollu, Üç kademeli, Helisel konik dişlili, IEC adaptörlü redüktör
Hollow shaft, Case mounted, Torque arm, Triple reduction, Helical bevel gear unit, With IEC adapter
Hohlwelle, Gehäuse Flanschmontage, Drehmomentstütze, dreistufig, Kegelstirnradgetriebe, Mit IEC-adapter

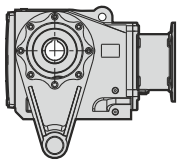

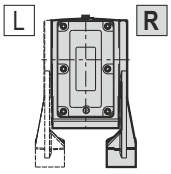

PKD 1390... DG / TK - PAM **R**

Delik milli, Gövdeden montajlı, Tork kollu, Üç kademeli, Helisel konik dişlili, PAM adaptörlü redüktör
Hollow shaft, Case mounted, Torque arm, Triple reduction, Helical bevel gear unit, With PAM adapter
Hohlwelle, Gehäuse Flanschmontage, Drehmomentstütze, dreistufig, Kegelstirnradgetriebe, Mit PAM adapter

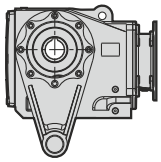

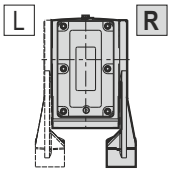

Not : L ve R çıkış yönünü göstermektedir. / Note: L and R shows that output direction. / Hinweis: L und R geben die Ausgangsrichtung an.

TR REDÜKTÖR SEÇİM FORMU

1- REDÜKTÖR

Kullanılacak Sektör: .....

Uygulama Yeri:.....

Günlük Çalışma Saati:
<4 [ ] 4-8 [ ] 8-16 [ ] >16 [ ]

Saatteki Dur-Kalk Sayısı:
0-50 [ ] 50-100 [ ] 100-200 [ ] 200-300 [ ]
300-500 [ ] 500-700 [ ] 700-1000 [ ] >1000 [ ]

Giriş Seçeneği: Motorlu [ ] Motorsuz [ ]

Talep Edilen Motor Gücü:.....kW

Talep Edilen Motor Devri:.....d/dak

Talep Edilen Çıkış Devri:.....d/dak

2 - GİRİŞ - ÇIKIŞ

Tahrik Tipi:
AC Motor [ ] AC Motor + Invertör [ ] Servo Motor [ ]
Hidro Motor [ ] Serbest Giriş Mili [ ] Diğer [ ]
.....

Motor Bağlantı Flanşı (Elektirik Motorlu ise):
Akuple [ ] IEC B5 [ ] PAM B5 [ ]
PAM B14 [ ] NEMA [ ]

Giriş Mili Özelliği (Serbest Giriş Milli ise):
Kamalı [ ] Diğer.....

Giriş Mili Tahrik Tipi (Serbest Giriş Milli ise):
Elastik Kaplin [ ] Hidrolik Kaplin [ ] Küçük Hızlarda Zincir Dişli [ ] Düz Dişli [ ]
Triger Kayış [ ] V Kayış [ ] Gergirme Makaralı Kayış [ ]

Giriş Mili Yük Durumu (Serbest Giriş Milli ise):
Radyal yük.....N
Eksenel Yük.....N / Çeki [ ] Bası [ ]

Çıkış Mili Özelliği (Serbest Giriş Milli ise):
Mil Çıkışlı [ ] Delik Milli [ ] Konik Sıktırma Şaftlı [ ]
Diğer.....

Çıkış Mili Tahrik Tipi:
Direkt [ ] Elastik Kaplin [ ] Hidrolik Kaplin [ ] Küçük Hızlarda Zincir Dişli [ ]
Düz Dişli [ ] Triger Kayış [ ] V Kayış [ ] Gerdirme Makaralı Kayış [ ]

Çıkış Mili Yük Durumu :
Radyal yük.....N
Eksenel Yük.....N / Çeki [ ] Bası [ ]

3 - MONTAJ

Montaj Pozisyonu:
M1 [ ] M2 [ ] M3 [ ] M4 [ ] M5 [ ] M6 [ ]

Kilit Durumu:
Var [ ] Yok [ ]

Deniz Seviyesinden Yükseklik:
0-1000 [ ] 1000-2000 [ ] 2000-3000 [ ] 3000-4000 [ ] 4000-5000 [ ]

Ortam Durumu:
Açık (1,25 m/sn) [ ] Kapalı (4 m/sn) [ ]

Ortam Şartları:
Normal [ ] Tozlu [ ] Nemli [ ] Kuru [ ]
Diğer.....

Ortam Sıcaklığı:.....ºC

4 - MOTOR

Elektiriksel Değer:
Voltaj.....V
Frekans.....Hz

Koruma Sınıfı:
IP55 [ ] IP65 [ ] Exproof [ ]
Diğer IP.....

Terminal Kutusu Yönü:
1 [ ] 2 [ ] 3 [ ] 4 [ ]

Termistör:
Var [ ] Yok [ ]

Fren Durumu:
Var [ ] Yok [ ]

Atex:
2G [ ] 2D [ ] Yok [ ]
Diğer.....

Diğer Notlar:
.....
.....
.....
.....
.....
.....
.....
.....

Lütfen doğru redüktör seçimi yapabilmek için gerekli bilgileri doldurunuz!

EN GEARBOX SELECTION FORM

1- GEAR UNIT

Sector for which will be used: .....

Application area:.....

Daily working hour: :
<4 [ ] 4-8 [ ] 8-16 [ ] >16 [ ]

Revolution per hours:
0-50 [ ] 50-100 [ ] 100-200 [ ] 200-300 [ ]
300-500 [ ] 500-700 [ ] 700-1000 [ ] >1000 [ ]

Input option: With motor [ ] Without motor [ ]

Requested Motor Power:.....kW

Requested Motor Rotation:.....min^{-1}

Requested Output Rotation:.....min^{-1}

2 - INPUT - OUTPUT

Drive type:
AC Motor [ ] AC Motor + Invertor [ ] Servo Motor [ ]
Hydromotor [ ] Free Input Shaft [ ] Diğer [ ]
.....

Motor Connection Flange (With Electric Motor):
Direct [ ] IEC B5 [ ] PAM B5 [ ]
PAM B14 [ ] NEMA [ ]

Property of Input Shaft (with free input shaft):
With Key [ ] Other.....

Driving type of Input Shaft(with free input shaft):
Elastic Coupling [ ] Hydraulic Coupling [ ] For Chain Drive With Low Speed [ ]
For Spur Gear [ ] For Trigger Belt [ ] For V belt [ ] Flat Belt With Spanning Pulley [ ]

Input Shaft Load case (with free input shaft):
Radial Load.....N
Axial Load.....N / Draw [ ] Impression [ ]

Property of Output Shaft (with free input shaft):
Solid Shaft [ ] Hollow shaft [ ] Shaft for Shrink Disc [ ]
Other.....

Output Shaft Drive type:
Direct [ ] Elastic Coupling [ ] Hydraulic Coupling [ ] Chain Drive With Low Speed [ ]
Spur Gear [ ] Trigger Belt [ ] V Belt [ ] Flat Belt With Spanning Pulley [ ]

Output Shaft Load case:
Radial Load.....N
Axial Load.....N / Draw [ ] Impression [ ]

3 - MOUNTING

Mounting Position:
M1 [ ] M2 [ ] M3 [ ] M4 [ ] M5 [ ] M6 [ ]

Backstop Situation:
Yes [ ] No [ ]

Altitude above sea level:
0-1000 [ ] 1000-2000 [ ] 2000-3000 [ ] 3000-4000 [ ] 4000-5000 [ ]

Ambient Situation:
Open (1,25 m/sn) [ ] Close (4 m/sn) [ ]

Ambient Conditions:
Normal [ ] Dusty [ ] Humid [ ] Dry [ ]
Other.....

Ambient Temperature :.....ºC

4 - MOTOR

Elektrical Value:
Voltage.....V
Frequency.....Hz

Protection Class :
IP55 [ ] IP65 [ ] Exproof [ ]
Other IP.....

Terminal Box Position:
1 [ ] 2 [ ] 3 [ ] 4 [ ]

Thermistor :
Yes [ ] No [ ]

Brake Situation:
Yes [ ] No [ ]

Atex:
2G [ ] 2D [ ] Yok [ ]
Other.....

Other Notes:
.....
.....
.....
.....
.....
.....
.....
.....

Please give required informations for selecting correct reducer!

DE FORMULAR FÜR GETRİEBEAUSWAHL

1- GETRİEBE

Sektor : .....

Anwendungsbereich:.....

Betriebsstunden/Tag:
<4 [ ] 4-8 [ ] 8-16 [ ] >16 [ ]

Anlauf pro Stunde:
0-50 [ ] 50-100 [ ] 100-200 [ ] 200-300 [ ]
300-500 [ ] 500-700 [ ] 700-1000 [ ] >1000 [ ]

Antriebsoption: mit Motor [ ] ohne Motor [ ]

Geforderte Motorleistung:.....kW

Angeforderte Motordrehzahl:.....min^{-1}

Angeforderter Abtriebsdrehzahl:.....min^{-1}

2 - ANTRİEB - ABTRİEB

Antriebstyp:
Wechselstrommotor [ ] Wechselstrommotor + Wechselrichter [ ] Servomotor [ ]
Hydromotor [ ] Freie Antriebswelle [ ] Sonstiges [ ]
.....

Motoranschlussflansch (bei Elektromotor):
Gekoppelt [ ] IEC B5 [ ] PAM B5 [ ]
PAM B14 [ ] NEMA [ ]

Antriebswelleneigenschaft (bei freier Antriebswelle):
mit Passfeder [ ] Sonstiges.....

Antriebsart der Antriebswelle (bei freier Antriebswelle):
Elastische Kupplung [ ] Hydraulische Kupplung [ ] Kettenrad bei kleinen Drehzahlen [ ]
Stirnrad [ ] Zahnriemen [ ] Keilriemen [ ] Spannrollenriemen [ ]

Belastungsart der Antriebswelle (bei freier Antriebswelle):
Radiale Belastung .....N
Axiale Belastung.....N / Zug [ ] Druck [ ]

Abtriebswelleneigenschaft (bei freier Antriebswelle):
Vollwelle [ ] Hohlwelle [ ] Welle mit Schrumpfscheibe [ ]
Sonstiges.....

Antriebsart der Abtriebswelle:
Direkt [ ] Elastische Kupplung [ ] Hydraulische Kupplung [ ] Stirnrad [ ] Keilriemen [ ]
Kettenrad bei kleinen Drehzahlen [ ] Zahnriemen [ ] Spannrollenriemen [ ]

Belastungsart der Abtriebswelle:
Radiale Belastung .....N
Axiale Belastung.....N / Zug [ ] Druck [ ]

3 - MONTAGE

Einbaulage:
M1 [ ] M2 [ ] M3 [ ] M4 [ ] M5 [ ] M6 [ ]

Rücklaufsperre:
Ja [ ] Nein [ ]

Höhe über dem Meeresspiegel:
0-1000 [ ] 1000-2000 [ ] 2000-3000 [ ] 3000-4000 [ ] 4000-5000 [ ]

Umgebungsbedingungen:
Ein (1,25 m/sn) [ ] Aus (4 m/sn) [ ]

Umweltbedingungen:
Normal [ ] staubig [ ] feucht [ ] trocken [ ]
Sonstiges.....

Umgebungstemperatur:.....ºC

4 - MOTOR

Elektrischer Wert:
Stromspannung.....V
Frequenz.....Hz

Schutzklasse:
IP55 [ ] IP65 [ ] Ex-geschützt [ ]
Andere IP.....

Ausrichtung des Klemmenkastens:
1 [ ] 2 [ ] 3 [ ] 4 [ ]

Thermistor:
Ja [ ] Nein [ ]

Bremse:
Ja [ ] Nein [ ]

Atex:
2G [ ] 2D [ ] Nein [ ]
Sonstiges.....

Andere Notizen:
.....
.....
.....
.....
.....
.....
.....
.....

Bitte geben Sie die notwendigen Informationen an, um das richtige Getriebe auswählen zu können!

TR SİPARİŞ ÖRNEĞİ | EN EXAMPLE FOR ORDERING | DE BEISPIEL BESTELLBESCREIBUNG

PKD 6390/32 297.35 DA/KS – PAM 90 - B5 – 90L / 4 BRE – R

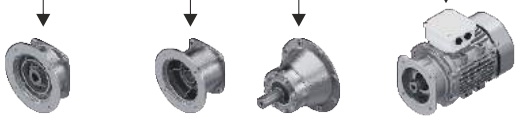

PAM B5	PAM B14	IEC	W	AKUPLE
63	63	63	109	
71	71	71	122	
80	80	80	125	
90	90	90	172	
100	100	100	213	
112	112	112	288	
132	132	132	397	
160		160		
180		180		
200		200		
225		225		
250		250		
280		280		
315		315		

185 - 284

Çıkış Yönü - L / R: Sol / Sağ
Output Direction - L/R: Left/Right
Abtriebsrichtung - L/R: Links/Rechts

27 - 39

İges: Tahvil Oranı
İges: Reduction Ratio
İges: Übersetzungsverhältnis

79 - 183

Motor Gövde Büyüklüğü
Case Width
Kistenweite

63 M
71 M
80 M
90 S/L
100 L
112 M
132 S/M
160 M/L
180 M/L
200 L
225 S/M
250 S/M/L
280 S/M/L
315 S/M/L

Kutup Sayısı
Number of Poles
Anzahl der Pole

2
4
6
2 - 4
2 - 8

Diğer Kutup kombinasyonları istendiğinde karşılanacaktır.
Other pole combinations on request
Andere Polkombinationen sind auf Anfrage erhältlich.

Motor Aksesuarları
Motor Accessories
Motorzubehör

BRE
RG
SR
HL
TF
TW
WU
EF
ZF
DF
IG
KK/FK
RLS

24

Standart Ürünler
Available standard products / Standardprodukte

DA/KS: Ayak montajlı, Delik milli, Konik sıktırmalı
DA/KS: Foot mounted, Hollow shaft, Shrink disc connector
DA/KS: Fußbefestigung, Hohlwelle, Schrumpfscheibe

TMA	DA	ÇMA	DA/KS	TMA/B5	DA/B5
DA/KS-B5	TMA/B14	DA/B14	ÇMA/B14	DA/KS-B14	
DG/B14	DG/KS-B14	DG/TK	DG/KS-TK	DG/TKP-B14	
DG/KS-TKP-B14	TMG/B5	DG/B5	DG/KS-B5	TMG/B14	

27 - 39

6
Gövde Büyüklüğü
Case Width
Gehäusegröße

*A0
*B0
*C1
*F4
*H5
1
G1
2
3
4
5
6
7
8
G8
9
G9

3
Kademe
Reduction
Stufen

2
3
4

185 - 284

90°
Giriş-Çıkış Açısı
Angle between input-output
Antriebs- und Abtriebswelle 90°

PF GÖVDE
PF CASE
PF GEHÄUSE

3
Gövde Büyüklüğü
Case Width
Gehäusegröße

3
4
5
6

185 - 284

2
Kademe
Reduction
Stufen

2
3

Tip: PKD
Helisel Konik Dişlili Redüktör
Helical - Bevel Geared Motor
Kegelstirnradgetriebemotoren

*** İki kademeli, Konik Dişlili Redüktör**
* Double Reduction, Helical Bevel Gear Unit
* Zweistufiges, Kegelstirnradgetriebe

TR MONTAJ POZİSYONLARI | EN MOUNTING POSITIONS | DE MONTAGEPOSITIONEN

AYAK MONTAJLI
FOOT MOUNTED
FUBBEFESTIGUNG

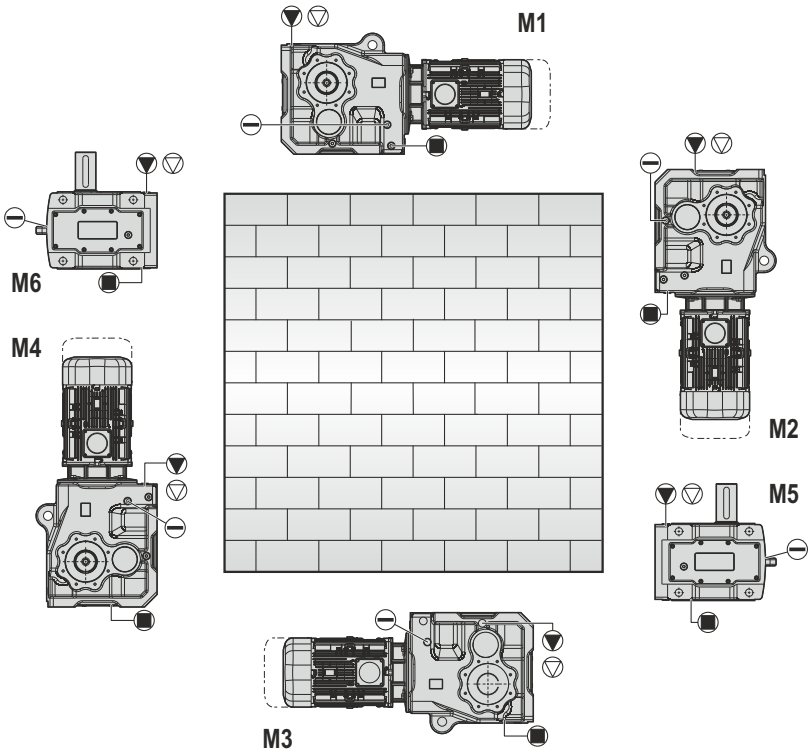

PKD 1390
PKD G 1390
PKD 2390
PKD 3390
PKD 4390
PKD 5390
PKD 6390
PKD 7390
PKD 8390
PKD G 8390
PKD 9390
PKD G 9390

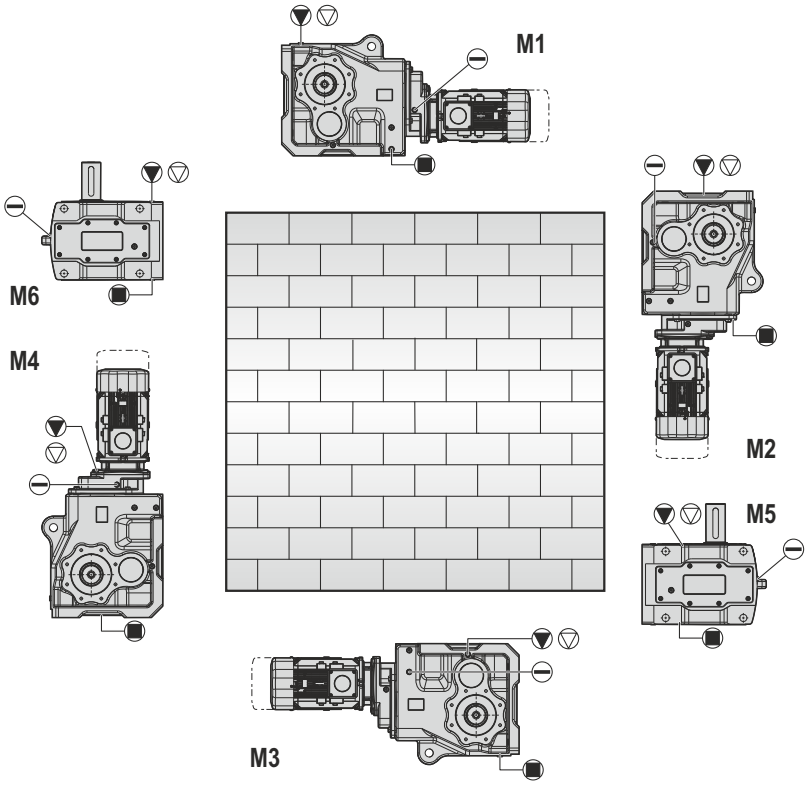

PKD 1490
PKD G 1490
PKD 2490
PKD 3490
PKD 4490
PKD 5490

Havalandırma tapası / Vent plug / Entlüftung

Doldurma tapası / Filling plug / Einfüllstopfen

Yağ Seviye tapası / Oil level / Ölstand

Boşaltma tapası / Drain plug / Ölablass

TR MONTAJ POZİSYONLARI | EN MOUNTING POSITIONS | DE MONTAGEPOSITIONEN

GÖVDEDEN MONTAJLI
CASE MOUNTED
GEHÄUSE FLANSCHMONTAGE

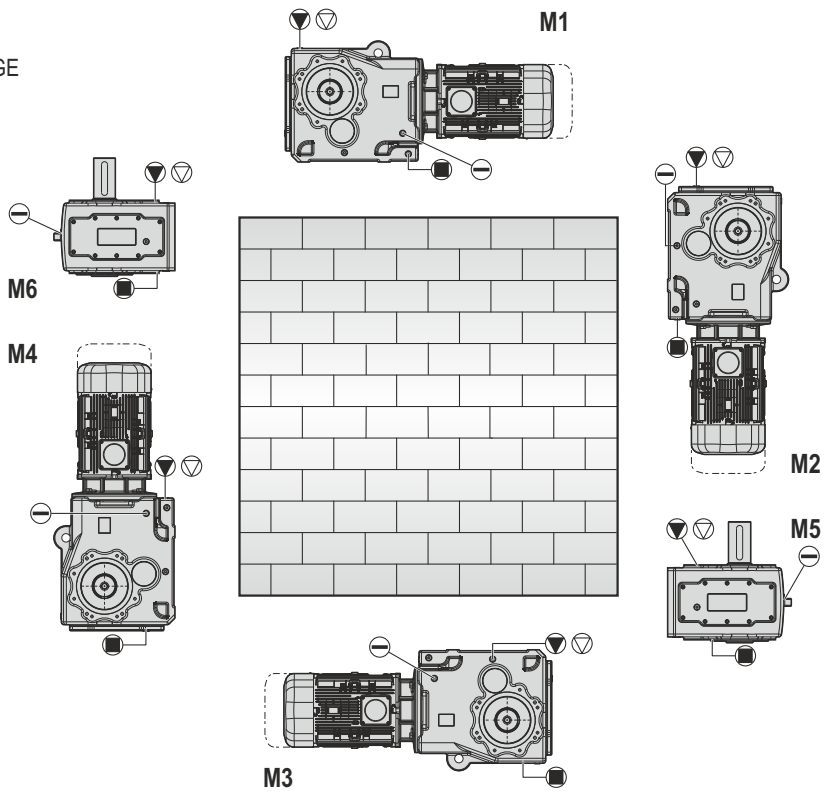

PKD 1390
PKD G 1390
PKD 2390
PKD 3390
PKD 4390
PKD 5390
PKD 6390
PKD 7390
PKD 8390
PKD G 8390
PKD 9390
PKD G 9390

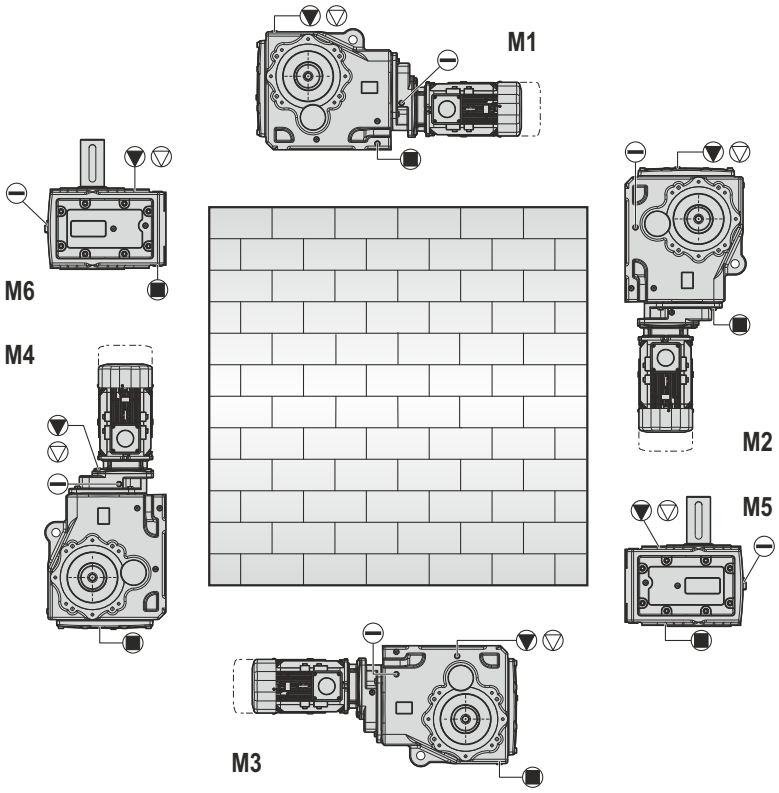

PKD 1490
PKD G 1490
PKD 2490
PKD 3490
PKD 4490
PKD 5490

Havalandırma tapası / Vent plug / Entlüftung

Doldurma tapası / Filling plug / Einfüllstopfen

Yağ Seviye tapası / Oil level / Ölstand

Boşaltma tapası / Drain plug / Ölablass

TR MONTAJ POZİSYONLARI | EN MOUNTING POSITIONS | DE MONTAGEPOSITIONEN

AYAK MONTAJLI
FOOT MOUNTED
FUBBEFESTIGUNG

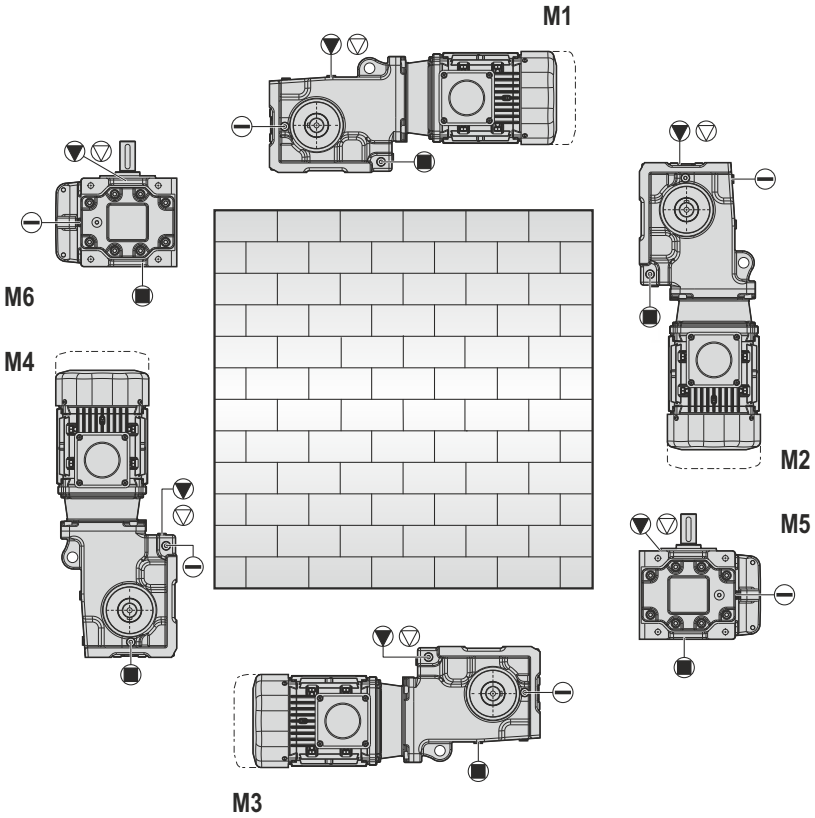

PKD A 0290
PKD B 0290
PKD C 1290
PKD F 4290
PKD H 5290

GÖVDEDEN MONTAJLI
CASE MOUNTED
GEHÄUSE FLANSCHMONTAGE

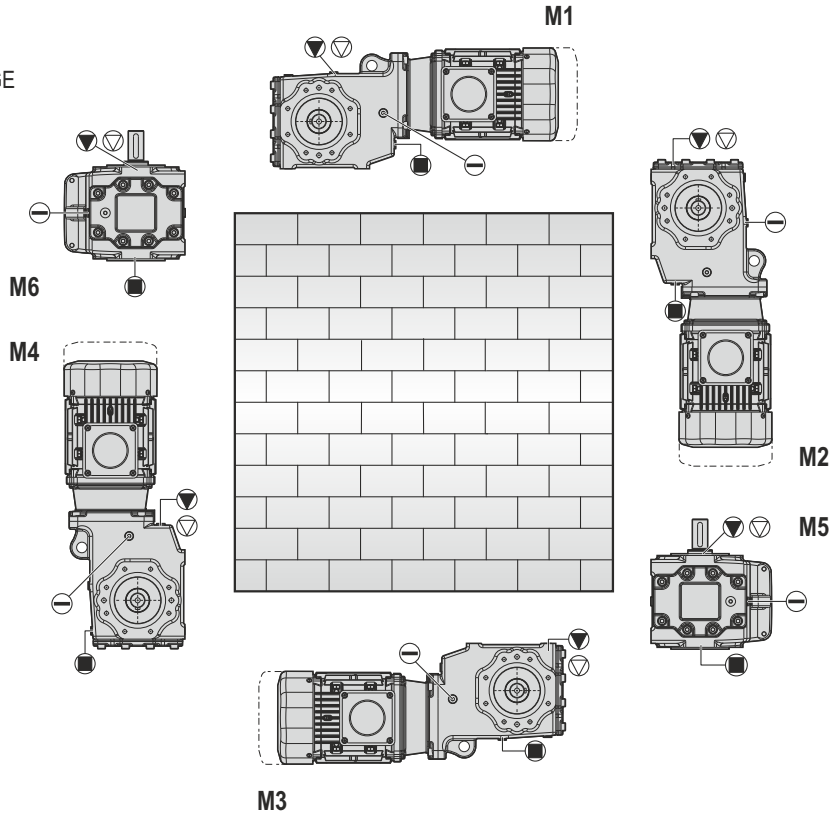

PKD A 0290
PKD B 0290
PKD C 1290
PKD F 4290
PKD H 5290

Havalandırma tapası / Vent plug / Entlüftung

Doldurma tapası / Filling plug / Einfüllstopfen

Yağ Seviye tapası / Oil level / Ölstand

Boşaltma tapası / Drain plug / Ölablass

TR MONTAJ POZİSYONLARI | EN MOUNTING POSITIONS | DE MONTAGEPOSITIONEN

PKD — TERMİNAL KUTUSU VE KABLO GİRİŞ YÖNLERİ / POSITION OF TERMINAL BOX AND CABLE ENTRY / KLEMMENKASTENLAGE UND KABELEINFÜHRUNG

M1

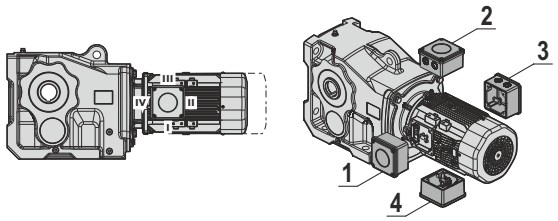

M2

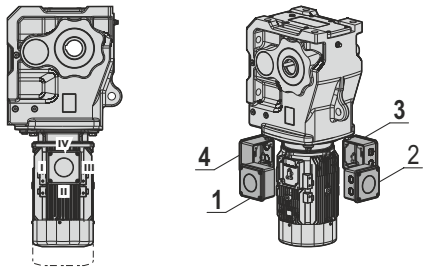

M3

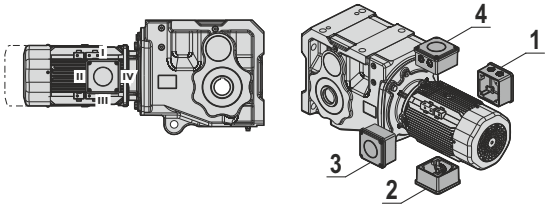

M4

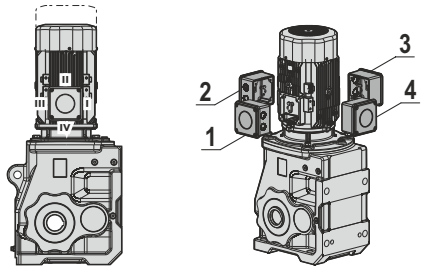

M5

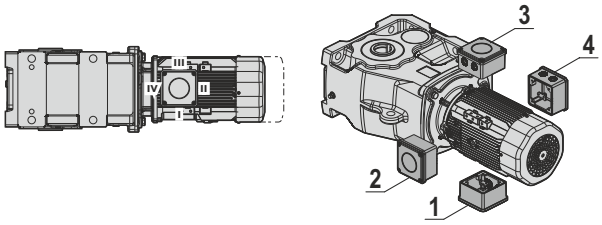

M6

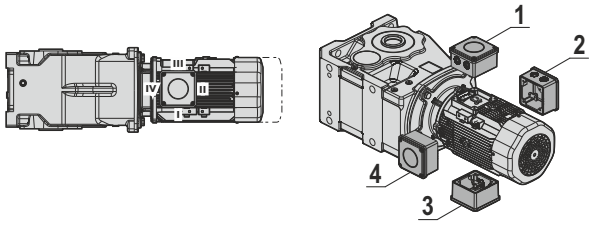

* **1 - 2 - 3 - 4 :** Terminal kutusu yönlerini gösterir.
* **I - II - III - IV:** Kablo giriş yönlerini gösterir.

* **1 - 2 - 3 - 4 :** Shows terminal box position
* **I - II - III - IV:** Shows cable entry position

* **1 - 2 - 3 - 4 :** Zeigt die Position des Klemmkastens an
* **I - II - III - IV:** Zeigt die kabeleinführungsposition an

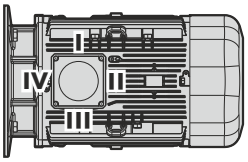

TR MONTAJ POZİSYONLARI | EN MOUNTING POSITIONS | DE MONTAGEPOSITIONEN

AYAK MONTAJLI
FOOT MOUNTED
FUBBEFESTIGUNG

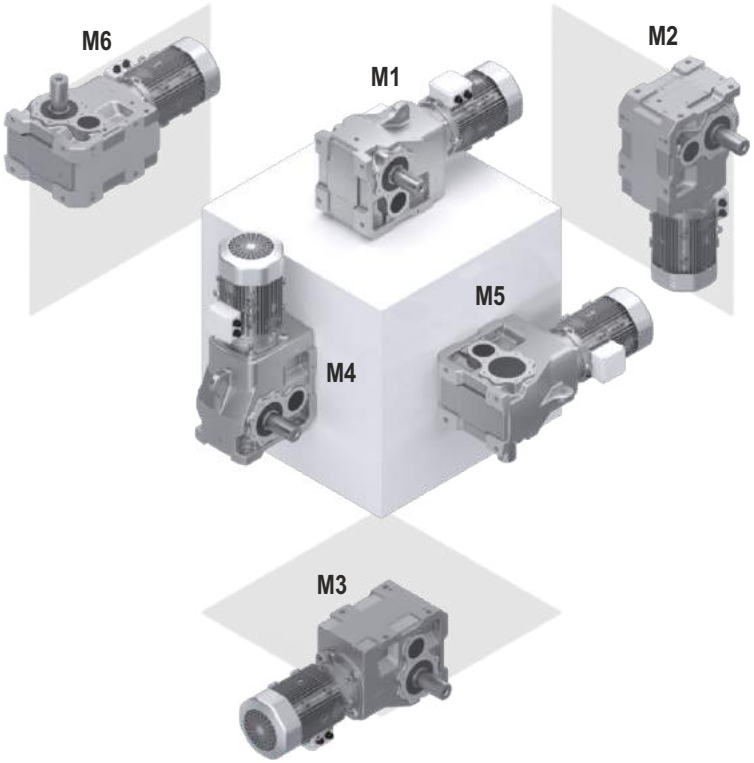

GÖVDEDEN MONTAJLI
CASE MOUNTED
GEHÄUSE FLANSCHMONTAGE

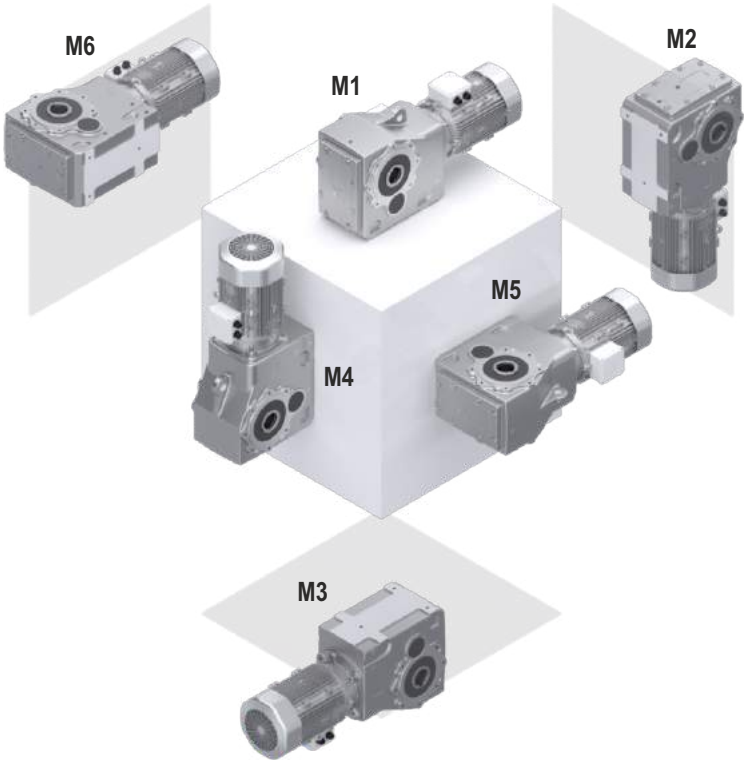

TR YAĞLAMA

Redüktör içerisindeki yağın basıncının artması yağ sızıntılarına neden olabilmektedir. Bunu önlemek için çalıştırılmadan ya da uzun süreli depolama yapılmadan önce havalandırma tapasının kapağı sökülmelidir.
Montaj aşamasında redüktörlerimiz en uygun mineral yağ ile yağlama prosesini en iyi yapacak şekilde doldurur ve sevkiyatta bu şekilde gönderilir. Yapılan bu ilk doldurma, aşağıdaki tablodan uygun ortam sıcaklığına karşılık gelen (normal tasarım) uygun yağlayıcı ile yağlanır. Bunlar dışındaki ortam sıcaklıkları için uygun yağlayıcılar ek bir ücret karşılığında tarafımızca temin edilebilir.
Redüktöre doldurulan yağlayıcı (mineral yağ) her 10000 saat çalışma süresi ya da 2 yıl içinde değiştirilmelidir. Eğer sentetik yağlayıcı kullanılır ise bu süreler 2 katına çıkarılabilir. Yani her 20000 saat veya 4 yılda bir değişim sağlanabilir. Çalışma süresi saat cinsinden belirtilen süreye gelmiş ise yağ değişimi için çalışma yılının dolması beklenmez. Yağ değişiminin daha sık aralıklarla yapılması tavsiye edilir. Bu gibi durumlarda yağ değişiminin yanı sıra kapsamlı bir temizlik de yapılmalıdır.
Yağ değişimi sonrasında özellikle ilk dolumdan sonra ilk birkaç saatlik çalışma esnasında yağ seviyesinde azalmalar gözlenebilir. Bu azalma tolerans dahilin de öngörülen bir azalmadır.
Müşterinin açık talebi üzerine ek bir ücret karşılığında yağ seviyesi gösterge tapası takabilmekteyiz. Yağ seviyesi gösterge tapası kullanarak müşterinin yağ seviyesini gözlemlemesi ve yaklaşık olarak seviye düzeltmesini yapmasını tavsiye ederiz. İki saatlik bir operasyonel çalışmanın ardından redüktör stabil bir hale gelir ve soğur. Bu süre zarfında yağ seviyesi gösterge tapasından gerekli kontrol yapılır ve gerekli yağ seviye düzeltmesi yapılabilir.
Redüktör normal olarak mineral yağ ile dolu olarak gelmektedir. Extra ücretlendirme ile sentetik yağ talep edilebilir.

-30°C nin altında ve 60°C nin üzerindeki ortam sıcaklıkları için şaft üzerinde kullanılan tüm sızdırmazlık elemanları özel kalite malzeme olmalıdır.

Not: Sentetik ve mineral yağlayıcılar birbirine karıştırılmamalıdır.

EN LUBRICATION

If the pressure of oil within reducer increases, there may leekage. To prevent this, before working or storage for a long time, the cover of ventilation plug should be removed.

At montage step, reducers are fulling with more suitable mineral oil and this oil makes lubrication process the best. Products are sent to shipment in this way. This initial filling is done with suitable lubricant corresponding to the appropriate ambient temperature (normal design) from the table below. Lubricants which are suitable for temperatures other than these ambient temperatures can be supplied by us with an additional cost.
The lubricant (mineral oil) which is filled to the reducer should be changed every 1000 hours of operation or at most two years period. If synthetic oil is used, these times could be twice. That is, it can be replaced every 2000 hours of operation or 4 years period. If the working time has reached the specified time in hours, it is not necessary to wait finish working year. It is adviced that you should change lubricant more frequently. In this case, addition to lubrication change, you should clean it comprehensively.
After changing lubrication,especially for first time, you can see decrease at lubrication level. This decrease is in our tolerance.
If our customer has request from us for oil level plug, we can deliver it with additional costs. We advice to customer that they should check oil level by oil level plug, and correct oil level. After operational working 2 hours, the reducer will be stable and cool. In this time period, you can check oil level from the windowof oil level plug and correct oil level.

Normally, reducer will come with mineral oil but, with extra price, you can obtain synthetic oil.

Different materials should be used for sealingrings at operation temperature where temperature is below -30 ºC and above 60 ºC

Note: It is important that different kinds of oil (synthetic and mineral oil) should not be mixed.

DE SCHMIERUNG

Vor Inbetriebnahme und längerem Lagern ist der Verschluß der Entlüftungsschraube zu entfernen, um einen Überdruck im Getriebe und eine damit verbundene mögliche Undichtigkeit zu vermeiden.
Getriebe sind bei der Auslieferung, betriebsfertig mit geeignetem Mineralöl befüllt. Die Erstbefüllung erfolgt mit geeignetem Schmierstoff entsprechend der geeigneten Umgebungstemperatur (Normalausführung) aus der folgenden Tabelle. Für andere Umgebungstemperaturen sind die entsprechenden Schmierstoffe gegen Mehrpreis erhältlich. Bei Befüllung mit Mineralöl sollte ein Schmierstoffwechsel alle 10.000 Betriebsstunden oder nach zwei Jahren durchgeführt werden. Bei synthetischem Öl verdoppeln sich diese Laufzeiten. Ein Wechsel kann somit alle 20.000 Stunden oder 4 Jahre durchgeführt werden. Wenn die Betriebszeit die angegebene Zeit in Stunden erreicht hat, ist das Betriebsjahr für den Ölwechsel nicht abzuwarten. Kürzere Intervalle für den Ölwechsel werden empfohlen. Es ist empfehlenswert, den Schmierstoffwechsel mit gründlicher Reinigung des Getriebes zu verbinden. Nach einem Schmierstoffwechsel und insbesondere nach der Erstfüllung kann sich der Ölstand in den ersten Betriebsstunden geringfügig ändern, da sich Ölkanäle und Hohlräume erst im Betrieb langsam füllen. Der Ölstand liegt dann immer noch in der zulässigen Toleranz.
Falls auf ausdrücklichen Kundenwunsch gegen Mehrpreis ein Ölschauglas eingebaut wird, empfehlen wir kundenseitig den Ölstand zu beobachten und diesen ungefähr zu korrigieren. Nach zwei Stunden Betriebszeit stabilisiert sich das Getriebe und kühlt ab. Während dieser Zeit erfolgt die notwendige Kontrolle über das Ölschauglas und die notwendige Ölstandskorrektur kann vorgenommen werden.
Die Normalbefüllung der Getriebe ist Mineralöl. Synthetisches Öl ist gegen Mehrpreis lieferbar.

Bei Umgebungstemperaturen unterhalb -30°C und oberhalb 60°C sind alle an der Welle verwendeten Dichtelemente in besonderer Werkstoffquatität einzusetzen.

Bemerkung: Synthetische und mineralische Schmierstoffe dürfen nicht gemischt werden.

Redüktör Tipi Type of gearbox Getriebetyp	Yağ Tipi Type of Lubricant Schmierstoffsorte	Ortam Sıcaklığı / Ambient Temp.°C / Umgebungstemperatur	ISO vizkozite sınıfı viscosity class Viskositätsklasse	SHELL	MOBİL	BP	ESSO	DEA	ARAL	CASTROL	TRIBOL	KLÜBER
Helisel Dişlili Redüktör Helical Gearboxes Stirnradgetriebe	Mineral yağ Mineral oil Mineralöl	- 5...40 Normal -15...25 # - 50...-15	ISO VG 220 ISO VG 100 ISO VG 15	Shell Omala Oel 220 Shell omala Oel 100 Shell Tellus Oel T 15	Mobilgear 600 XP 220 Mobilgear 600 XP 150 Mobil DTE 10 Excel 15	Energol GR-XP 220 Energol GR-XP 100 Bartran HV 15	Spartan EP 220 Spartan EP 100 Univis J 13	Deagear DX SAE 85W-90 Falcon CLP 220 Deagear DX SAE 80W Falcon CLP 150 Alrkraft Hydraulic Oil 15	Degol BG 220 Degol BG 100 Vitamol 1010	Alpha SP 220 Alpha MW 220 Alpha MAX 220 Alpha SP 100 Alpha MW 100 Alpha MAX 220 Hyspin AWS 15 Hyspin SP 15 Hyspin ZZ 15	Tribol 1100/220 Tribol 1100/100 Tribol 770	Klüberoil GEM 1-220 Klüberoil GEM 1-100 Isoflex MT 30 rot
	Sentetik yağ Synthetic oil Synthetisches Öl	- 25...80	ISO VG 220	Shell Tivela Oel WB	Mobil Glygoyle 30	Enersyn SG-XP 220	ESSO Glycolube 220	Polydea PGLP 220	Degol GS 220	Alphasyn PG 220	Tribol 800/220	Klübersynth GH 6 - 220
	Biyolojik Sentetik yağ Biodegradable oil Biologisches Synthetisches Öl	- 25...80	ISO VG 220					Plantogear 220 S	Bio-Degol S 220	Carelube GES 220	Tribol Bio Top1418/220	Klüber - Bio GM 2 - 220
	Gıda yağları Food - grade oil Lebensmittelöle	- 25...80	ISO VG 220	Cassida 220	Mobil SHC Cibus 220		GEAR OIL FM 220	Renolin 220	Degol FG 220	OPTIMOL optileb GE 220	Tribol Food Proof 1810/220	Klüberoil 4UH1 - 220
	Akışkan sentetik gres Synthetic fluid grease Fließendes synthetisches Fett	- 35...60		Shell Tivela compound A	Mobil SHC Polyrex 005	Enersyn GSF	Fliessfett S 420	Glissando 6833 EP 00	Aralub SKA 00	Alpha Gel 00	Tribol 800/1000	Klübersynth GE 46 -1200
Rulmanlar Bearings Lager	Mineral yağlı gres Mineral oil grease Mineralölfett	- 30...60 Normal # 50...110		Alvania Fett R 3 oder Alvania Fett RL 3	Mobilux 3 Mobilux 2	Energrease LS 3 Energrease LS 2	Beacon 3 Beacon 2	Glissando 30 Glissando 20 Glissando FT 3	Aralub HL 3 Aralub HL 2 Aralub BAB EP 2	Spheerol AP 3 Spheerol AP 2 LZV - EP Spheerol EPL 2	Tribol 3030/100-2 Tribol 4020/220-2 Tribol 3785	Centoplex 3 Centoplex 2
	Sentetik gres Synthetic grease synthetisches Fett	# - 50...110		Aero Shell Grease 16 oder 7	Mobiltemp SHC 32		Beacon 325	Discor 8 - EP 2	Aralub SKL 2	Product 783/46	Tribol 3499	Isoflex Topas NB52

TR YAĞ MİKTAR TABLOSU | EN LUBRICATION LEVELS | DE SCHMIERSTOFFTABELLE

AYAK MONTAJLI / FOOT MOUNTED / FUßBEFESTIGUNG

İKİ KADEME / DOUBLE STAGE / ZWEISTUFIG

Yağ Miktarı - Litre (L) / Amount of oil - Liter (L) / Ölmenge - Liter (L)

Tip / Type Typ	M1	M2	M3	M4	M5	M6
PKD A 0290	0.40	0.70	0.50	0.60	0.40	0.50
PKD B 0290	0.50	1.00	1.00	1.10	0.60	0.80
PKD C 1290	1.00	1.50	1.50	1.90	0.90	1.40
PKD F 4290	1.90	3.00	3.00	3.90	2.20	2.20
PKD H 5290	2.40	4.40	4.50	5.80	3.30	3.30

ÜÇ KADEME / TRIPLE STAGE / DREISTUFIG

Yağ Miktarı - Litre (L) / Amount of oil - Liter (L) / Ölmenge - Liter (L)

Tip / Type Typ	M1	M2	M3	M4	M5	M6
PKD 1390	0.70	1.80	1.90	2.00	1.80	1.80
PKD G 1390	0.80	1.90	1.80	2.00	1.80	1.80
PKD 2390	1.20	2.90	3.30	3.60	2.80	2.90
PKD 3390	1.90	5.30	6.00	6.40	5.20	5.20
PKD 4390	2.90	8.80	9.20	9.20	7.70	7.60
PKD 5390	6.00	16.0	17.80	19.50	14.50	14.50
PKD 6390	10.10	28.00	31.30	34.70	26.40	24.50
PKD 7390	10.10	28.00	29.80	32.00	26.40	24.50
PKD 8390	17.20	52.00	60.00	66.00	50.00	47.00
PKD G 8390	29.30	73.50	83.00	96.50	69.00	62.50
PKD 9390	42.00	128.00	144.00	160.00	116.00	106.00
PKD G 9390	74.60	188.00	207.00	252.00	185.00	155.00

DÖRT KADEME / QUADRUPLE STAGE / VIERSTUFIG

Yağ Miktarı - Litre (L) / Amount of oil - Liter (L) / Ölmenge - Liter (L)

Tip / Type Typ	M1	M2	M3	M4	M5	M6
PKD 1490	1.60	2.30	2.40	2.70	2.00	2.20
PKD G 1490	1.60	2.30	2.40	2.70	2.10	2.20
PKD 2490	2.70	3.30	3.90	4.40	3.10	3.40
PKD 3490	3.40	6.00	7.00	7.80	5.30	5.70
PKD 4490	5.00	10.00	10.80	12.50	8.90	9.40
PKD 5490	12.50	17.10	19.20	23.60	16.10	16.90

TR YAĞ MİKTAR TABLOSU | EN LUBRICATION LEVELS | DE SCHMIERSTOFFTABELLE

GÖVDEDEN MONTAJLI / CASE MOUNTED / GEHÄUSE FLANSCHMONTAGE

İKİ KADEME / DOUBLE STAGE / ZWEISTUFIG

Yağ Miktarı - Litre (L) / Amount of oil - Liter (L) / Ölmenge - Liter (L)

Tip / Type Typ	M1	M2	M3	M4	M5	M6
PKD B 0290	0.60	1.00	1.00	1.10	0.70	0.70
PKD C 1290	1.10	1.50	1.30	1.90	0.90	0.90
PKD F 4290	1.50	2.80	2.80	3.50	2.10	2.10
PKD H 5290	2.90	4.50	4.30	6.00	3.60	3.60

ÜÇ KADEME / TRIPLE STAGE / DREISTUFIG

Yağ Miktarı - Litre (L) / Amount of oil - Liter (L) / Ölmenge - Liter (L)

Tip / Type Typ	M1	M2	M3	M4	M5	M6
PKD 1390	0.70	1.90	1.90	2.00	1.80	2.00
PKD G 1390	0.80	1.90	1.90	2.00	1.80	2.00
PKD 2390	1.40	3.30	3.50	4.20	3.30	3.70
PKD 3390	2.90	5.10	6.50	7.20	5.80	5.80
PKD 4390	3.60	8.30	9.80	10.90	9.40	9.40
PKD 5390	6.00	13.90	18.50	21.00	15.90	17.00
PKD 6390	11.30	25.80	30.60	34.60	29.80	31.40
PKD 7390	11.10	25.70	30.40	34.00	29.00	30.90
PKD 8390	20.80	53.60	65.70	71.20	56.00	62.70
PKD G 8390	31.00	67.30	75.80	90.80	71.70	77.90
PKD 9390	40.50	117.40	139.50	156.80	121.60	131.50
PKD G 9390	74.10	188.00	194.00	249.40	170.00	190.00

DÖRT KADEME / QUADRUPLE STAGE / VIERSTUFIG

Yağ Miktarı - Litre (L) / Amount of oil - Liter (L) / Ölmenge - Liter (L)

Tip / Type Typ	M1	M2	M3	M4	M5	M6
PKD 1490	1.80	2.30	2.30	2.70	2.20	2.20
PKD G 1490	1.80	2.30	2.30	2.70	2.20	2.20
PKD 2490	3.00	3.40	3.90	4.90	3.30	3.70
PKD 3490	4.90	5.50	7.10	8.40	5.70	6.40
PKD 4490	8.30	9.60	10.80	13.50	10.90	10.90
PKD 5490	14.10	15.30	19.50	24.40	16.70	17.30

TR KİLİT

Opsiyonel olarak redüktörlerimize kilit sistemi koymaktayız. Kilit sistemimiz yalnızca tek bir dönüş yönüne müsaade vermektedir (saat yönü ya da saatin tersi yönü). Aksi yönde dönüş, kilit sistemi tarafından engellenmektedir.

Üç fazlı motor gövde büyüklüğü 80 ve üzeri AC motorlar ve W (serbest giriş mili) kovanları yağlaması yapılmış kilit sistemi ile donatılabilir.

Kilit sistemi istenildiğinde çıkartılabilir. Kilit sistemi merkezkaç kuvveti tarafından kontrol edilir ve dönüş hızı n1>900 dev/dk ise yağlanma ile aşınmasız çalışır.

Dönüş yönünün tanımlanması her zaman çıkış şaftına ya da miline göre olur. Konik sıktırma kullanılan redüktörlerde konik sıktırma diski, kullanılan konik sıktırma şaftının aksi tarafında bulunur. Konik sıktırmalı redüktörler için dönüş yönü, konik sıktırmalı şafta göre belirlenir.

Dikkat: Sistemi devreye almadan önce motorun ve redüktörün dönüş yönleri kontrol edilmelidir. Redüktör üzerindeki oklar size dönüş yönünü gösterecektir.

CW : Saat yönü

CCW : Saat yönü tersi

EN BACKSTOP

Our reducers includes backstop system optionally. Backstop system permits only one direction of rotation (clockwise or counterclockwise). Opposite direction of rotation is prevented by backstop system.

Motors which are three phase and case dimensions upper than 80 and free input shafts can be used with lubricated backstop systems.

You can remove backstop system when you want. Backstop system is controlled by centrifugal force and works without corrosion if the rotation speed upper than 900 min^{-1}.

Rotation direction is decided according to output shaft. For reducers with shrink disc , it is at opposite direction of tip of output shaft which includes shrink disc connector.

Caution: Before starting, the direction of rotation of the gear unit and motor must be checked to avoid the risk of a breakage.

CW : Clockwise

CCW : Counterclockwise

DE RÜCKLAUFSPERRE

Optional bieten wir für unsere Getriebe Rücklaufsperren an. Rücklaufsperren ermöglichen den Lauf in nur eine Drehrichtung (im Uhrzeigersinn oder gegen den Uhrzeigersinn). Drehung in die entgegengesetzte Richtung wird durch die Rücklaufsperre verhindert.
Drehstrommotoren ab Baugröße 80, Wechselstrommotoren und W-Adapter (freie Antriebswelle) können mit geschmierten Rücklaufsperren ausgestattet werden.

Die Rücklaufsperre kann auf Wunsch entfernt werden. Die Rücklaufsperre ist fliehkraftgesteuert und läuft bei einer Drehzahl n1>900 U/min mit Ölung verschleißfrei.

Die Drehrichtung wird immer mit Blick auf die Abtriebs-Hohlwelle oder –Vollwelle angegeben. Bei Getrieben mit Schrumpfscheibe befindet sich die Schrumpfscheibe gegenüber dem Abtriebswellenende. Die Drehrichtung für Getriebe mit Schrumpfscheibe wird auch nach diesem Abtriebswellenende bestimmt.

Achtung: Vor Inbetriebnahme der Anlage die Drehrichtung des Motors und des Getriebes prüfen. Pfeile auf dem Getriebe zeigen die Drehrichtung an.

CW: Im Uhrzeigersinn

CCW: Gegen den Uhrzeigersinn

A

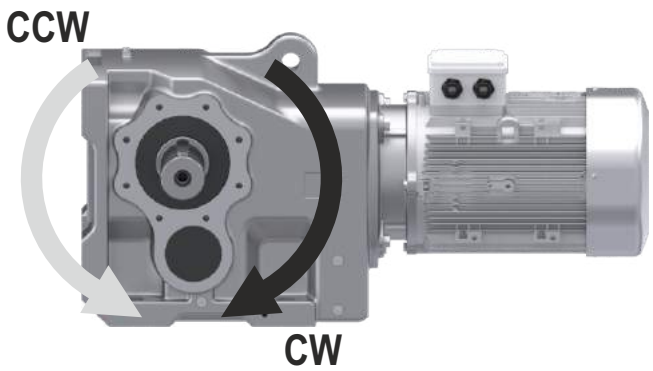

B

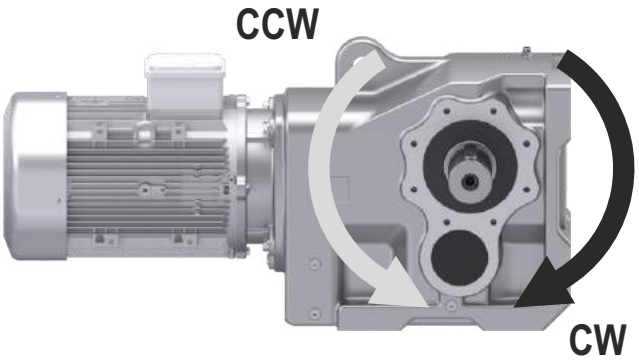

***Bütün şaft tasarımları ve çift çıkışlı şaftlar için geçerlidir.**

*It is valid for every shaft designs and doble output shafts.

*Gilt für alle Wellenausführungen und beidseitiger Vollwelle.

TR TOLERANSLAR

MOTOR VE REDÜKTÖRLERDE BOYUT - ÇİZİM BİLGİLERİ

Motor ölçüleri istenen opsiyona göre değişebilir.

DELİK MİLLİLER
Delik mil çapı toleransı için (DIN 748) ISO H7.
Müşteri mili çap toleransı ISO h6.
"H" yükleme tipi bulunuyorsa ISO k6.

IEC - ADAPTÖR
Flanş merkezi çap toleransı için ISO H7

GİRİŞ VE ÇIKIŞ ŞAFTLARI
Mil çapı toleransı (DIN 748) :

Ø 14 ile Ø 50 mm arası için ISO k6,
Ø 50 mm üzeri için ISO m6

Şaftta diş çekilmiş delikler için DIN 332/2 ye göre;

= Ø 13 - Ø 16	M5
> Ø 16 - Ø 21	M6
> Ø 21 - Ø 24	M8
> Ø 24 - Ø 30	M10
> Ø 30 - Ø 38	M12
> Ø 38 - Ø 50	M16
> Ø 50 - Ø 85	M20
> Ø 85 - Ø 130	M24

185-284

Kama yatakları DIN 6885
Şaft boyu "h" DIN 747

FLANŞLAR
Flanş merkezi çap toleransı (DIN 42948);
≤ Ø 230 mm' ye kadar ISO j6,
> Ø 230 mm üzeri için ISO h6

EN TOLERANCES

DIMENSION - DRAWINGS

Motor dimension could be changed according to customer purchase.

HOLLOW SHAFTS
Tolerance of hollow shaft (DIN 748) ISO H7.
Tolerance of customer's solid shaft which is used for hollow shaft ISO h6.
With type of load classification 'H' which is heavyshock operation ISO k6.

IEC - ADAPTER
Diameter tolerance of flange centering is machined according to ISO H7.

INPUT AND OUTPUT SHAFT
Tolerances of solid shaft (DIN 748) :

between Ø 14 - Ø 50 mm to ISO k6,
greater than Ø 50 mm to ISO m6.

Tapped center hole is machined according to DIN 332, sheet 2 ;

= Ø 13 - Ø 16	M5
> Ø 16 - Ø 21	M6
> Ø 21 - Ø 24	M8
> Ø 24 - Ø 30	M10
> Ø 30 - Ø 38	M12
> Ø 38 - Ø 50	M16
> Ø 50 - Ø 85	M20
> Ø 85 - Ø 130	M24

185-284

Keyways are machined according to DIN 6885, sheet 1
Shaft heights are machined according to "h" to DIN 747

FLANGES
Diameter tolerance of flange centering is machined according to (DIN 42948);
≤ Ø 230 mm to ISO j6,
> Ø 230 mm to ISO h6

DE TOLERANZEN

ABMESSUNGEN - ZEICHNUNGSINFORMATIONEN MOTOR UND GETRIEBE

Die Abmessungen des Motors können je nach gewünschter Option geändert werden.

HOHLWELLEN
Toleranz der Hohlwellen-Durchmesser (DIN 748) nach ISO H7.
Toleranz der kundenseitigen Welle nach ISO h6,
bei Lastgrad "H" nach ISO k6

IEC - ADAPTER
Toleranz der Flanschzentrierung nach ISO H7

EIN- UND AUSGANGSWELLE
Toleranz der Wellen-Durchmesser (DIN 748):

ø 14 bis ø 50 mm= ISO k6
> ø 50 mm= ISO m6

Gewindebohrungen nach DIN 332/2

= Ø 13 - Ø 16	M5
> Ø 16 - Ø 21	M6
> Ø 21 - Ø 24	M8
> Ø 24 - Ø 30	M10
> Ø 30 - Ø 38	M12
> Ø 38 - Ø 50	M16
> Ø 50 - Ø 85	M20
> Ø 85 - Ø 130	M24

185-284

Paßfedern nach DIN 6885
Achshöhe "h" nach DIN 747

FLANSCHE
Toleranz der Flanschzentrierung (DIN 42948);

≤ ø 230 mm nach ISO j6
> ø 230 mm nach ISO h6

TR SERVOMOTOR ADAPTÖRÜ

EN SERVOMOTOR ADAPTERS

DE ADAPTER ZUM ANBAU VON SERVOMOTOREN

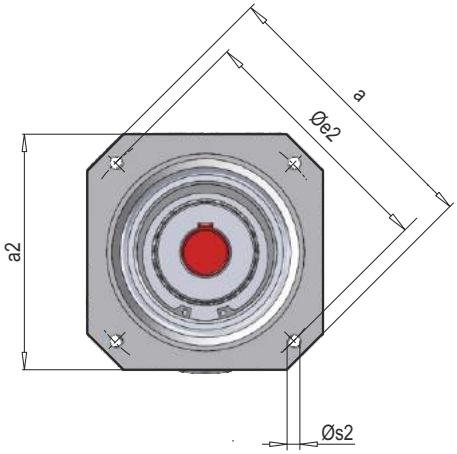

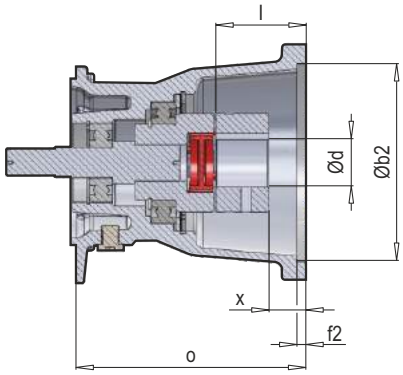

Redüktör Tipi Gear Unit Type Getriebetyp	Motor Büyüklüğü / Motor Size / Motorbaumaße							Şaft Ebatı Shaft Size Wellenmaße		Silindir Cylinder Zylinder	M_{knom} [Nm]	Adaptör tipi Adapter type Adaptertyp
	a	a2	b2	e2	f2	s2	x	d	l	o		
PKD 1390, G 1390, 2390	120	96	80	100	4	M6	15	19	40	124	10	Servo 100 / 160 S
PKD 1390, G 1390, 2390	165	126	110	130	4	M8	20	24	50	136	35	Servo 130 / 160 S
PKD 3390	155	126	110	130	4	M8	20	24	50	150	35	Servo 130 / 250 S
PKD 1390, G 1390, 2390	186	155	130	165	5	M10	23	32	58	151	95	Servo 165 / 160 S
PKD 3390	186	155	130	165	5	M10	23	32	58	166	95	Servo 165 / 250 S
PKD 3390	240	192	180	215	5	M12	45	38	80	187	95	Servo 215/ 250 S
PKD 4390, 5390	240	192	180	215	5	M12	24	38	80	229	310	Servo 215/ 300 S
PKD 4390, 5390	350	260	250	300	5	M16	26	48	82	231	310	Servo 300/ 300 S
PKD 6390, 7390, 8390, G 8390, 9390, G 9390	350	260	250	300	5	M16	26	48	82	249	310	Servo 300/ 350 S

SEP tipi servo motor bağlantı adaptörünün bağlantısı kamalı olarak yapılmaktadır. SEK tiplerinde ise servo motor adaptörünün bağlantısı setuskur civata sıktırması ile yapılmaktadır. Servo motor bağlantı adaptörünün bağlantı flanşının farklı olması durumunda yüksek adetteki siparişler üretime alınır.

For connecting SEP adapter which is shown above, servo motor's output shaft is designed with locking key. For connecting SEK type adapter, connecting is supplied with a clamp coupling sleeve. An intermediate flange is required when other servo motor types are used with IEC adapter. Offers are manufactured gladly by PGR.

Der Anschluss des Servomotor-Anschlussadapters Typ SEP erfolgt mit Paßfeder. Bei den SEK-Typen erfolgt der Anschluss des Servomotoradapters durch Anziehen der Gewindestifte. Bei abweichendem Anschlussflansch des Servomotor-Anschlussadapters werden Aufträge in hoher Stückzahl in Produktion genommen.

TR KONİK SIKTIRMA | EN SHRINK DISC CONNECTOR | DE SCHRUMPFSCHEIBE

AYAK MONTAJLI /
FOOT MOUNTED / FUSSMONTAGE, (DA\KS)

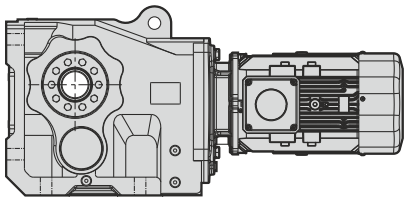

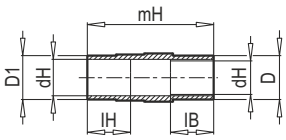

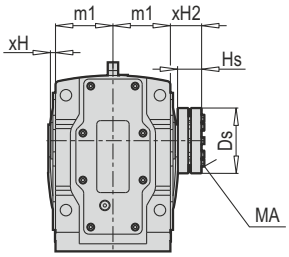

Redüktör Tipi Gear Unit Type Getriebetyp	Konik sıktırma Shrink disc connector Schrumpfscheibe						Şaft ölçüleri Shaft dimensions Wellenabmessungen									Vida tork değeri Hexagon screw Schraubendreh-momentwert		
	Tip Type Typ	M_{amax} [Nm]	S_{h6}	S_{f6}	Ds	Hs	D	D1	dH^{H7}	IB	IH	mH	xH	xH2	m1	d x l	Zs	M_A [Nm]
PKD 1390 DA/KS PKD 1490 DA/KS	KS 30/40	400	2.45	2.15	80	36	45	40	30	30	36	184	3	39	71	M6x35*	8	12
PKD G 1390 DA/KS PKD G 1490 DA/KS	KS 30/40	400	2.45	2.15	80	36	45	40	30	30	36	184	3	39	71	M6x35*	8	12
PKD 2390 DA/KS PKD 2490 DA/KS	KS 35/46	720	1.98	1.73	90	40	50	46	35	40	40	221	4	45	86	M6x35*	10	12
PKD 3390 DA/KS PKD 3490 DA/KS	KS 40/55	1.300	1.79	1.57	112	44	55	55	40	40	44	255	5	50	100	M8x40	8	30
PKD 4390 DA/KS PKD 4490 DA/KS	KS 50/62	2.400	1.82	1.70	125	46	70	62	50	50	46	290	5	55	115	M8x40	10	30
PKD 5390 DA/KS PKD 5490 DA/KS	KS 60/76	4.200	1.93	1.79	156	58	85	76	60	60	58	365	5	70	145	M10x50	10	59
PKD 6390 DA/KS PKD 6390/32 DA/KS PKD 6390/42 DA/KS	KS 70/90	7.200	1.91	1.79	182	74	100	90	70	70	74	430	5	85	170	M12x70*	10	100
PKD 7390 DA/KS PKD 7390/32 DA/KS PKD 7390/42 DA/KS	KS 80/108	8.500	3.70	3.56	208	83	120	108	80	82	80	430	5	85	170	M12x70*	14	100
PKD 8390 DA/KS PKD 8390/42 DA/KS PKD 8390/52 DA/KS	KS 100/128	12.000	2.53	2.40	240	92	130	128	100	70	82	505	10	95	200	M16x80*	8	250
PKD G 8390 DA/KS PKD G 8390/52 DA/KS	KS 110/138	18.000	1.92	1.83	266	74	140	138	110	80	74	576	12	88	238	M16x70	8	250
PKD 9390 DA/KS PKD 9390/52 DA/KS	KS 125/158	26.000	2.24	2.13	296	98	160	158	125	80	98	710	10	110	295	M16x80*	12	250
PKD G 9390 DA/KS PKD G 9390/62 DA/KS PKD G 9390/63 DA/KS	**İstenildiğinde** / On Request / Auf Anfrage																	

Daha iyi ve kolay montaj ve demontaj için konik sıktırmalı tavsiye edilebilir. Hs ölçüsü, cıvata sıkılmadan önceki ölçüsüdür. Konik sıktırma genellikle kullanıcının mili kullandığı yönün karşısına montaj edilmelidir. Kullanıcı mil uzunluğu ile şaft uzunluğu (mH) uyuşmalıdır. Şaft çapı ISO h6 veya f6'ya göre imal edilmelidir. (f6= Kolay montaj)

S = h6 veya f6 ile konik sıktırmanın güvenirliliği.
MA = Civatayı sıkmak için gerekli olan tork
Zs = Vida miktarı
Mamax = max. izin verilebilir çıkış momenti

Yukarıdaki bütün ölçüler W kovanlı, IEC ve PAM adaptörlü helisel konik dişlili redüktörler için de geçerlidir.

PGR recommends to use shrink disc for easier installation and disassembly Hs values show dimension before tightening screw. When customer shaft is installed to the gear unit, shrink disc should be mounted on opposite side of it. Consider that, customer shaft must be equal 'mH' dimension which is length of hollow shaft and customer diameter shaft should be machined according to ISO h6 or f6 tolerances.

S = Assurance of shrink disc (with h6 and f6 tolerance)
MA = Screw torque for tightening
Zs = Amount of screw
Mamax = maximum allowable output moment

All of the above dimensions are also valid for helical bevel gear units with free input shaft, IEC and PAM adaptor.

Zur besseren und einfacheren Montage und Demontage kann eine Schrumpfscheibe empfohlen werden. Hs ist die Größe vor dem Anziehen der Schraube. Die Schrumpfscheibe sollten grundsätzlich entgegen der Antriebsrichtung der Kundenwelle montiert werden. Die Länge der Kundenwelle muss der Hohlwelle (mH) entsprechen. Der Durchmesser der Hohlwelle sollte nach ISO h6 oder f6 gefertigt werden. (f6= einfache Montage)

Zuverlässigkeit der Schrumpfscheibe mit S = h6 oder f6.
MA= Erforderliches Drehmoment zum Anziehen der Schraube
Zs = Schraubenanzahl
Mamax = max. zulässiges Abtriebsdrehmoment

Alle oben genannten Maße gelten auch für Kegelradgetriebe mit freier Antriebswelle, IEC- und PAM-Adapter.

TR GÜÇLENDİRİLMİŞ KONİK SIKTIRMA

EN WITH REINFORCED SHRINK DISC CONNECTOR

DE VERSTÄRKTE SCHRUMPFSCHEIBE

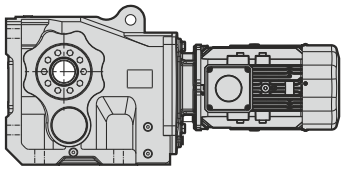

GKS

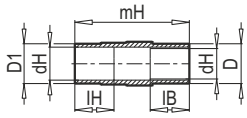

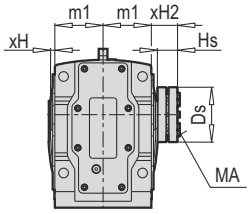

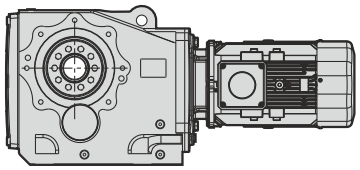

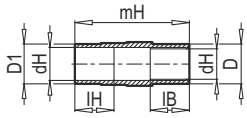

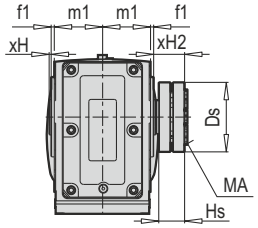

	Redüktör Tipi / Gear Unit Type / Getriebetyp	Konik sıktırma / Shrink disc connector / Schrumpfscheibe						Şaft ölçüleri / Shaft dimensions / Wellenabmessungen									Vida tork değeri / Hexagon screw / Schrauben-drehmomentwert		
		Tip / Type / Typ	M_{amax} [Nm]	S_{h6}	S_{f6}	Ds	Hs	D	D1	dH^{H7}	lB	lH	mH	xH	xH2	m1	d x l	Zs	M_A [Nm]
Ayak Montajlı / Foot Mounted / Fußbefestigung	PKD 8390 DA/GKS PKD 8390/42 DA/GKS PKD 8390/52 DA/GKS	GKS 100/128	12000	3.92	3.69	266	136	130	128	100	70	136	559	10	149	200	M20x100	8	490
	PKD G 8390 DA/GKS PKD G 8390/52 DA/GKS	GKS 110/138	18000	4.52	4.32	296	160	140	138	110	80	160	663	12	175	238	M20x130	12	490
	PKD 9390 DA/GKS PKD 9390/52 DA/GKS	GKS 130/158	26000	3.81	3.63	315	170	160	158	130	80	170	782	10	182	295	M20x130	12	490
	PKD G 9390 DA/GKS PKD G 9390/62 DA/GKS PKD G 9390/63 DA/GKS	**İstenildiğinde** / On Request / Auf Anfrage																	
Gövdeden Montajlı / Case Mounted / Befestingung Vom Gehäuse	PKD 6390 DG/GKS-B14 PKD 6390/32 DG/GKS-B14 PKD 6390/42 DG/GKS-B14	GKS 85/108	7200	4.48	4.21	236	110	110	108	85	80	110	464	5	119	165	M16x90	10	250
	PKD 7390 DG/GKS-B14 PKD 7390/32 DG/GKS-B14 PKD 7390/42 DG/GKS-B14	GKS 95/108	8500	4.95	4.80	236	110	120	108	95	80	110	464	5	119	165	M16x90	10	250
	PKD 8390 DG/GKS-B14 PKD 8390/42 DG/GKS-B14 PKD 8390/52 DG/GKS-B14	GKS 110/138	12000	6.78	6.49	296	160	140	138	110	80	160	587	8	175	195	M20x130	12	490
	PKD G 8390 DG/GKS-B14 PKD G 8390/52 DG/GKS-B14	GKS 130/158	18000	5.50	5.24	315	170	160	158	130	80	170	674	8	182	235	M20x130	12	490
	PKD 9390 DG/GKS-B14 PKD 9390/52 DG/GKS-B14	GKS 150/210	26000	4.41	4.17	386	130	200	210	150	100	130	754	10	154	288	M20x100	14	490
	PKD G 9390 DG/GKS-B14 PKD G 9390/62 DG/GKS-B14 PKD G 9390/63 DG/GKS-B14	GKS 155/185	50000	3.80	3.70	430	230	200	195	155/160	95	140	904	10	240	320	M24x180	14	835

Daha iyi ve kolay montaj ve demontaj için konik sıktırmalı tavsiye edilebilir. Hs ölçüsü, cıvata sıkılmadan önceki ölçüsüdür. Konik sıktırma genellikle kullanıcının mili kullandığı yönün karşısına montaj edilmelidir. Kullanıcı mil uzunluğu ile şaft uzunluğu (mH) uyuşmalıdır. Şaft çapı ISO h6 veya f6'ya göre imal edilmelidir. (f6= Kolay montaj)

S = h6 veya f6 ile konik sıktırmanın güvenirliliği.
MA = Civatayı sıkmak için gerekli olan tork
Zs = Vida miktarı
Mamax = max. izin verilebilir çıkış momenti

Yukarıdaki bütün ölçüler W kovanlı, IEC ve PAM adaptörlü helisel konik dişlili redüktörler için de geçerlidir.

Mevcut tasarımlar için 27 - 39

PGR recommends to use shrink disc for easier installation and disassembly Hs values show dimension before tightening screw. When customer shaft is installed to the gear unit, shrink disc should be mounted on opposite side of it. Consider that, customer shaft must be equal 'mH' dimension which is length of hollow shaft and customer diameter shaft should be machined according to ISO h6 or f6 tolerances.
S = Assurance of shrink disc (with h6 and f6 tolerance)
M = Screw torque for tightening A
Z = Amount of screw s
M = maximum allowable output moment amax

All of the above dimensions are also valid for helical bevel gear units with free input shaft, IEC and PAM adaptor.

For existing designs 27 - 39

Zur besseren und einfacheren Montage und Demontage kann eine Schrumpfscheibe empfohlen werden. Hs ist die Größe vor dem Anziehen der Schraube. Die Schrumpfscheibe sollten grundsätzlich entgegen der Antriebsrichtung der Kundenwelle montiert werden. Die Länge der Kundenwelle muss der Hohlwelle (mH) entsprechen. Der Durchmesser der Hohlwelle sollte nach ISO h6 oder f6 gefertigt werden. (f6= einfache Montage)
Zuverlässigkeit der Schrumpfscheibe mit S = h6 oder f6.
MA= Erforderliches Drehmoment zum Anziehen der Schraube
Zs = Schraubenanzahl
Mamax = max. zulässiges Abtriebsdrehmoment

Alle oben genannten Maße gelten auch für Kegelradgetriebe mit freier Antriebswelle, IEC- und PAM-Adapter.

27 - 39 für aktuelle Designs

TR GÜÇLENDİRİLMİŞ KONİK SIKTIRMA KORUMA KAPAĞI

EN COVER OF REINFORCED SHRINK DISC

DE SCHUTZDECKEL FÜR VERSTÄRKTE SCHRUMPFSCHEIBE

GKS - KK

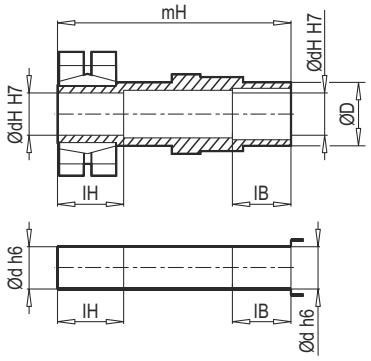

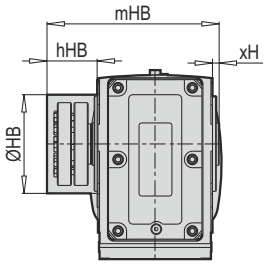

Tip / Type / Typ	ØD	ØdH H7	Ød h6	lB	lH	mH	xH	hHB	HB	mHB
PKD 6390 DG/GKS-B14 KK PKD 6390/32 DG/GKS-B14 KK PKD 6390/42 DG/GKS-B14 KK	110	85	85	80	110	464	5	149	260	489
PKD 7390 DG/GKS-B14 KK PKD 7390/32 DG/GKS-B14 KK PKD 7390/42 DG/GKS-B14 KK	120	95(85)	95(85)	80	110	464	5	149	260	489
PKD 8390 DG/GKS-B14 KK PKD 8390/42 DG/GKS-B14 KK PKD 8390/52 DG/GKS-B14 KK	140	110	110	80	160	587	8	210	308	615
PKD G8390 DG/GKS-B14 KK PKD G8390/52 DG/GKS-B14 KK	160	130	130	80	170	674	8	237	366	722
PKD 9390 DG/GKS-B14 KK PKD 9390/52 DG/GKS-B14 KK	200	150	150	100	130	754	10	237	366	830
PKD G 9390 DG/GKS-B14 KK PKD G 9390/62 DG/GKS-B14 KK PKD G 9390/63 DG/GKS-B14 KK	200	155	160	95	140	904	10	273	452	930

PGR DRIVE TECHNOLOGIES

TR AYAK MONTAJLI, ÇİFT MİL ÇIKIŞLI

EN FOOT MOUNTED, SOLID SHAFT ON BOTH SIDES

DE FUSSMONTAGE, DOPPELWELLENAUSGANG

ÇMA

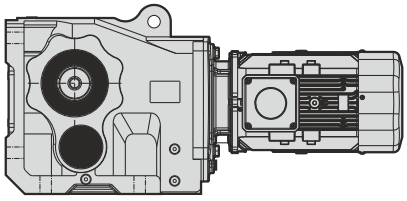

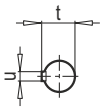

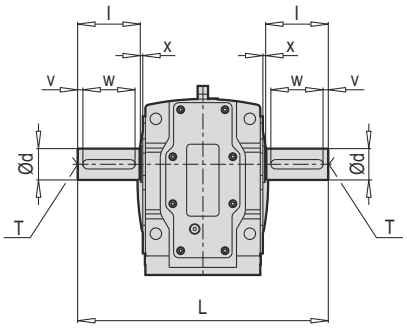

Tip / Type / Typ	Şaft ölçüleri / Shaft dimensions / Wellenabmessungen								
	Ød	l	L	t	u	v	w	x	T
PKD A 0290 ÇMA	20	40	196	22.5	6	4	32	3	M6
PKD B 0290 ÇMA	20	40	214	22.5	6	4	32	3	M6
PKD C 1290 ÇMA	25	50	264	28	8	5	40	4	M10
PKD F 4290 ÇMA	30	60	290	33	8	5	50	4	M10
PKD H 5290 ÇMA	35	70	332	38	10	5	60	5	M12
PKD 1390 ÇMA PKD 1490 ÇMA	30	60	270	33.0	8	5	50	4	M10
PKD G 1390 ÇMA PKD G 1490 ÇMA	35	70	290	38.0	10	7	56	4	M12
PKD 2390 ÇMA PKD 2490 ÇMA	35	70	322	38.0	10	7	56	5	M12
PKD 3390 ÇMA PKD 3490 ÇMA	45	90	392	48.5	14	5	80	6	M16
PKD 4390 ÇMA PKD 4490 ÇMA	60	120	480	64.0	18	10	100	5	M20
PKD 5390 ÇMA PKD 5490 ÇMA	70	140	582	74.5	20	15	110	6	M20
PKD 6390 ÇMA PKD 6390/32 ÇMA PKD 6390/42 ÇMA	90	170	694	95.0	25	15	140	7	M24
PKD 7390 ÇMA PKD 7390/32 ÇMA PKD 7390/42 ÇMA	90	170	694	95.0	25	15	140	7	M24
PKD 8390 ÇMA PKD 8390/42 ÇMA PKD 8390/52 ÇMA	110	210	836	116.0	28	15	180	8	M24
PKD G 8390 ÇMA PKD G 8390/52 ÇMA	120	210	914	127.0	32	15	180	9	M24
PKD 9390 ÇMA PKD 9390/52 ÇMA	140	250	1110	148.0	36	15	220	10	M24
PKD G 9390 ÇMA PKD G 9390/42 ÇMA PKD G 9390/52 ÇMA	190	320	1314	200	45	10	300	10.5	M30

Lütfen sipariş verirken kama kanallarının pozisyonlarını belirtiniz.
Yukarıdaki bütün ölçüler W kovanlı, IEC ve PAM adaptörlü helisel konik dişlili redüktörler için de geçerlidir.

Mevcut tasarımlar için 27 - 39

Please indicate positions of keyways when ordering.

All of the above dimensions are also valid for helical bevel gear units with free input shaft, IEC and PAM adaptor.

For existing designs 27 - 39

Bitte bei Bestellung die Positionen der Keilnuten angeben.

Alle oben genannten Maße gelten auch für Kegelradgetriebe mit freier Antriebswelle, IEC- und PAM-Adapter.

27 - 39 für aktuelle Designs

TR AYAK MONTAJLI, B14 FLANŞLI | EN FOOT MOUNTED, FLANGE B14 | DE FUSSMONTAGE, B14 FLANSCH

TMA - B14

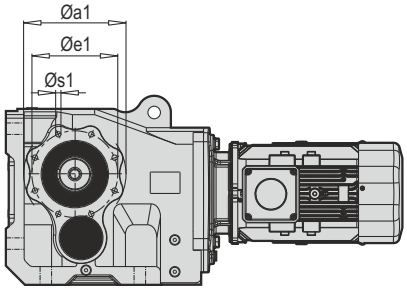

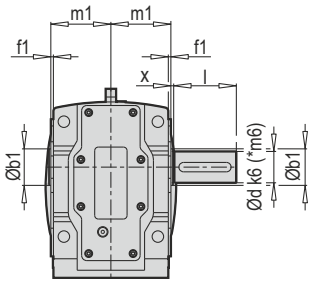

Tip Type Typ	Montaj ölçüleri Mounting dimensions Einbaumaße					Ana Ölçüler Outline dimensions Hauptabmessungen			
	a1	b1 j6	e1	f1	s1	m1	X	d	l
PKD 1390 TMA/B14 PKD 1490 TMA/B14	110	75	100	4	M8 x 13	71	4	30	60
PKD G 1390 TMA/B14 PKD G 1490 TMA/B14	110	75	100	4	M8 x 13	71	4	35	70
PKD 2390 TMA/B14 PKD 2490 TMA/B14	125	90	115	4	M8 x 13	86	5	35	70
PKD 3390 TMA/B14 PKD 3490 TMA/B14	150	100	130	5	M10 x 16	100	6	45	90
PKD 4390 TMA/B14 PKD 4490 TMA/B14	180	125	165	5	M12 x 20	115	5	*60	120
PKD 5390 TMA/B14 PKD 5490 TMA/B14	220	150	194	5	M12 x 20	145	6	*70	140
PKD 6390 TMA/B14 PKD 6390/32 TMA/B14 PKD 6390/42 TMA/B14	250	180	215	5	M12 x 20	170	7	*90	170
PKD 7390 TMA/B14 PKD 7390/32 TMA/B14 PKD 7390/42 TMA/B14	250	180	215	5	M12 x 20	170	7	*90	170
PKD 8390 TMA/B14 PKD 8390/42 TMA/B14 PKD 8390/52 TMA/B14	300	230	265	5	M12 x 20	200	8	*110	210
PKD G 8390 TMA/B14 PKD G 8390/52 TMA/B14	350	250	300	5	M16 x 25	238	9	*120	210
PKD 9390 TMA/B14 PKD 9390/52 TMA/B14	400	290	350	5	M20 x 30	295	10	*140	250
PKD G 9390 TMA/B14 PKD G 9390/62 TMA/B14 PKD G 9390/63 TMA/B14	480	310	400	5	M20 x 30	326.5	10.5	*190	320

Ayak montajlı ve her iki taraftan B14 flanşlı delik millleri için de geçerlidir. Tip PKD 3390 DA/B14

Yukarıdaki bütün ölçüler W kovanlı, IEC ve PAM adaptörlü helisel konik dişlili redüktörler için de geçerlidir.

Mevcut tasarımlar için 27 - 39

TMG/B14 için sayfa 185 - 284. sayfalara bakınız.

Flange B14 which is used for hollow shaft on both sides is available for foot mounted designs. (e.g. PKD 3390 DA/B14)

All of the above dimensions are also valid for helical bevel gear units with free input shaft, IEC and PAM adaptor.

For existing designs 27 - 39

For TMG/B14, see pages 185 - 284.

Gültig auch für Fußbefestigung und Hohlwellen mit beidseitigen B14-Flanschen. Typ PKD 3390 DA/B14

Alle oben genannten Maße gelten auch für Kegelradgetriebe mit freier Antriebswelle, IEC- und PAM-Adapter.

27 - 39 für aktuelle Designs

Seite 185 - 284 für TMG/B14. siehe Seiten.

TR AYAK MONTAJLI, B5 FLANŞLI

EN FOOT MOUNTED, FLANGE B5

DE FUSSMONTAGE, B5 FLANSCH

TMA - B5

Bu tasarım gövdeden yapılacak montaj için uygun değildir. (Gövdeden montaj için Tip TMG/B5)

This B5 flange is not suitable for case mounted gear units. Consider that, if you use B5 flange on case mounted, you shoul look for B5 flange mounted pages. (e.g. Type TMG/B5)

Dieses Design ist nicht für die Gehäusemontage geeignet. (Typ TMG/B5 für Gehäusemontage)

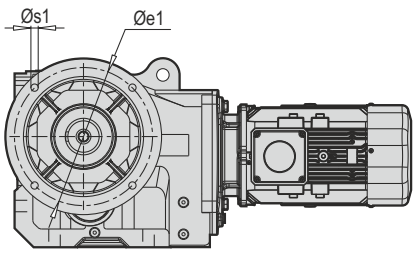

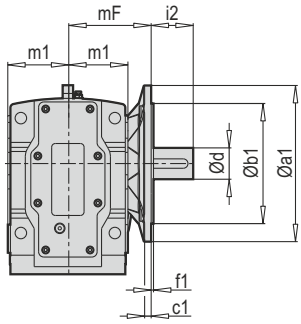

Tip Type Typ	Montaj ölçüleri Mounting dimensions Einbaumaße						Ana Ölçüler Outline dimensions Hauptabmessungen				
	a1	$b_1^{j6(*h6)}$	c1	e1	f1	s1	İ2	m1	mF	d	l
PKD 1390 TMA/B5 PKD 1490 TMA/B5	160	110	12	130	3.5	9	44	71	101	30	60
PKD G 1390 TMA/B5 PKD G 1490 TMA/B5	160	110	12	130	3.5	9	44	71	101	35	70
PKD 2390 TMA/B5 PKD 2490 TMA/B5	200	130	12	165	3.5	11	40	86	121	35	70
PKD 3390 TMA/B5 PKD 3490 TMA/B5	250	180	16	215	4.0	14	56	100	140	45	90
PKD 4390 TMA/B5 PKD 4490 TMA/B5	300	230	20	265	4.0	14	80	115	160	60	120
PKD 5390 TMA/B5 PKD 5490 TMA/B5	350	250*	20	300	5.0	18	86	145	205	70	140
PKD 6390 TMA/B5 PKD 6390/32 TMA/B5 PKD 6390/42 TMA/B5	400	300*	20	350	5.0	18	112	170	235	90	170
PKD 7390 TMA/B5 PKD 7390/32 TMA/B5 PKD 7390/42 TMA/B5	400	300*	20	350	5.0	18	112	170	235	90	170

Delik millilerde de ayak montajlı ve B5 flanş montajı bulunabilir. Tip PKD 3390 DA/B5

Yukarıdaki bütün ölçüler W kovanlı, IEC ve PAM adaptörlü helisel konik dişlili redüktörler için de geçerlidir.

Flange B5 which is used for hollow shaft on both sides is available for foot mounted design. (e.g. PKD 3390 DA/B5)

All of the above dimensions are also valid for helical bevel gear units with free input shaft, IEC and PAM adaptor.

Hohlwellen können auch fußmontiert und B5 Flansch-montiert werden. Typ PKD 3390 DA/B5

Alle oben genannten Maße gelten auch für Kegelradgetriebe mit freier Antriebswelle, IEC- und PAM-Adapter.

Mevcut tasarımlar için 27 - 39

For existing designs 27 - 39

27 - 39 für aktuelle Designs

TR B5 FLANŞI ÖLÇÜLERİ | EN DIMENSION OF FLANGE B5 | DE B5 FLANSCHABMESSUNGEN

AYAK MONTAJLI B5 FLANŞLI /
FOOT MOUNTED WITH B5 FLANGE / FUSSMONTAGE B5 FLANSCH

TMA - B5 / DA - B5

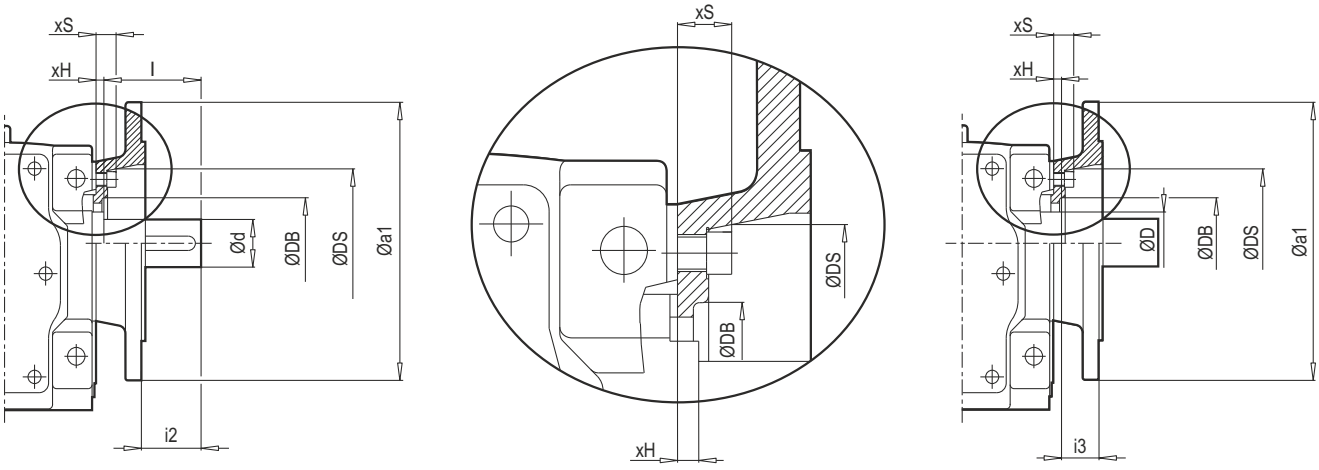

TMA **DA**

Tip Type Typ	Flanş ø Flange ø Flansch ø	Şaft ölçüleri Shaft dimensions Wellenabmessungen					Ana Ölçüler Outline dimensions Hauptabmessungen				
	a1	d	l	x	D	xH	øDB	øDS	i2	i3	xS
PKD 1390 PKD 1490	160	30	60	4	45	3	76	100	34	27	17
PKD G 1390 PKD G 1490	160	30	60	4	45	3	76	100	34	27	17
PKD 2390 PKD 2490	200	35	70	5	50	4	77	115	40	31	17
PKD 3390 PKD 3490	250	45	90	6	70	5	90	130	56	35	20
PKD 4390 PKD 4490	300	60	120	5	80	5	115	165	80	40	24
PKD 5390 PKD 5490	350	70	140	6	100	5	135	185	86	55	27
PKD 6390 PKD 6390/32 PKD 6390/42	400	90	170	7	110	5	165	220	112	60	27
PKD 7390 PKD 7390/32 PKD 7390/42	400	90	170	7	110	5	165	220	112	60	27

Yukarıdaki bütün ölçüler W kovanlı, IEC ve PAM adaptörlü helisel konik dişlili redüktörler için de geçerlidir.

All of the above dimensions are also valid for helical bevel gear units with free input shaft, IEC and PAM adaptor.

Alle oben genannten Maße gelten auch für Kegelradgetriebe mit freier Antriebswelle, IEC- und PAM-Adapter.

Mevcut tasarımlar için 27 - 39

For existing designs 27 - 39

27 - 39 für aktuelle Designs

TR GÜÇLENDİRİLMİŞ B5 FLANŞI

EN REINFORCED FLANGE B5

DE VERSTÄRKTER B5 FLANSCH

GB5 - DG

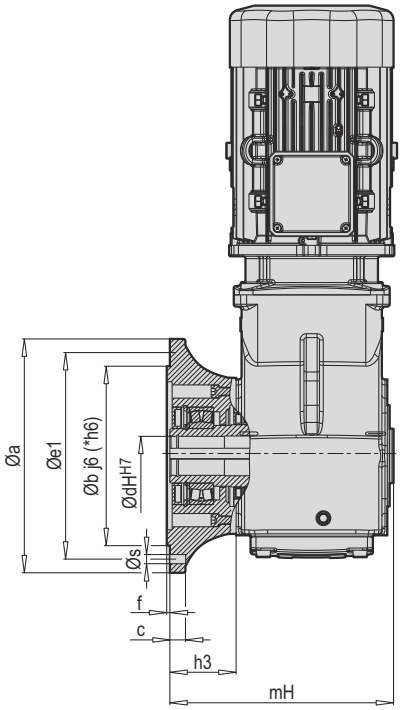

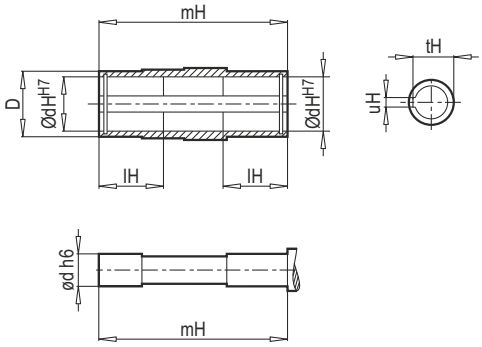

Tip / Type / Typ	a	b	c	e1	f	h3	s	uH	tH	mH	dH^{H7}	lH
PKD 1390 DG/GB5 PKD 1490 DG/GB5	200	130	12	165	3.5	75	4 x 11	10	38.5	218	35	50
PKD 2390 DG/GB5 PKD 2490 DG/GB5	250	180	16	215	4.0	86	4 x 13.5	12	43.5	258	40	60
PKD 3390 DG/GB5 PKD 3490 DG/GB5	300	230	20	265	4.0	85	4 x 14	14	54.0	287	50	70
PKD 4390 DG/GB5 PKD 4490 DG/GB5	350	*250	20	300	5.0	135	4 x 18	18	64.5	362.5	60	80
PKD 5390 DG/GB5 PKD 5490 DG/GB5	400	*300	22	350	5.0	166	4 x 18	20	75.0	457	70	100
PKD 6390 DG/GB5 PKD 6390/32 DG/GB5 PKD 6390/42 DG/GB5	450	*350	24	400	5.0	184	8 x 18	22	85.5	524	80	120
PKD 7390 DG/GB5 PKD 7390/32 DG/GB5 PKD 7390/42 DG/GB5	450	*350	24	400	5.0	184	8 x 18	22	85.5	524	80	120
PKD 8390 DG/GB5 PKD 8390/42 DG/GB5 PKD 8390/52 DG/GB5	550	*450	28	500	5.0	210	8 x 18	28	116.5	615	110	140
PKD G8390 DG/GB5 PKD G8390/52 DG/GB5	660	*550	32	600	6.0	262	8 x 22	32	127.5	747	120	160

PGR, özellikle karıştırıcılarda kullanılması için şaft üzerindeki rulman mesafelerinin arttırıldığı ve güçlendirilmiş B5 flanşının kullanıldığı redüktörü kullanıma sunmaktadır.
Bu tasarım, daha uzun rulman ömrünün yanı sıra daha yüksek radyal ve eksenel kuvvetlere karşı dayanım sağlar. Buradaki oynak makaralı rulman kullanımı özellikle (uzun karıştırıcı millerinde ya da şaftlarında) oluşan eksen kaçıklıklarının karşılanması için idealdir.
Opsiyonel olarak sunduğumuz bu aksesuar yanlızca gövdeden montajlı tiplerde kullanılabilir.

PGR makes available reducers with longer dimension bearings which is over the shaft for usage of agigators.

This design enables ,besides more durable bearings, more durability for higher radial and axial forces. The usage of spherical roller bearing absorbs the misaligments especially for long shaft agigators.

This optional acessory can bu used only for case mounting reducers.

Insbesondere für Rührwerke hat PGR den Lagerabstand der Welle durch die Verwendung des verstärkten B5-Flansches vergrößert.
Dieses Design ermöglicht die Aufnahme hoher radialer und axialer Kräfte bei erhöhter Lagerlebensdauer. Die Pendelrollenlagerung eignet sich besonders für längere Rührwerkswellen, da Fluchtungsfehler ausgeglichen werden.

Dieses Zubehör, welches optional angeboten wird, kann nur bei gehäusemontierten Ausführungen verwendet werden.

TR GÜÇLENDİRİLMİŞ B5 FLANŞI

EN REINFORCED FLANGE B5

DE VERSTÄRKTER B5 FLANSCH

GB5 - TMG

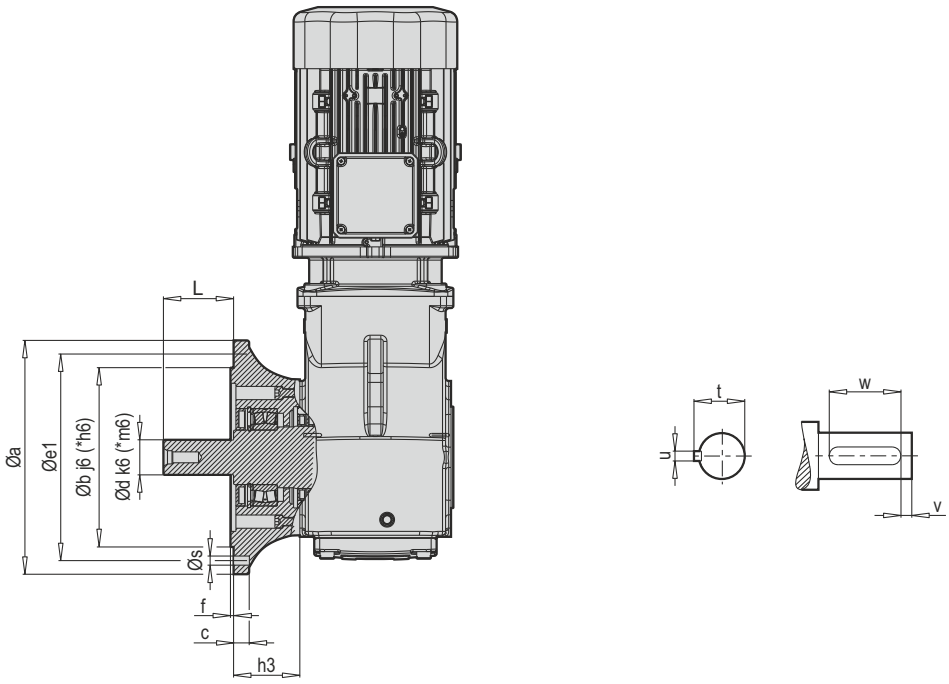

Tip / Type / Typ	a	b	c	e1	f	h3	s	d	L	t	u	v	w	T
PKD 1390 TMG/GB5 PKD 1490 TMG/GB5	200	130	12	165	3.5	75	4 x11	30	60	33.0	8	5	50	M10
PKD 2390 TMG/GB5 PKD 2490 TMG/GB5	250	180	16	215	4.0	86	4 x 13.5	35	70	38.0	10	7	56	M12
PKD 3390 TMG/GB5 PKD 3490 TMG/GB5	300	230	20	265	4.0	85	4 x 14	45	90	48.5	14	5	80	M16
PKD 4390 TMG/GB5 PKD 4490 TMG/GB5	350	*250	20	300	5.0	135	4 x 18	*65	130	69.0	18	15	100	M20
PKD 5390 TMG/GB5 PKD 5490 TMG/GB5	400	*300	22	350	5.0	166	4 x 18	*75	140	79.5	20	7.5	125	M20
PKD 6390 TMG/GB5 PKD 6390/32 TMG/GB5 PKD 6390/42 TMG/GB5	450	*350	24	400	5.0	184	8 x 18	*90	170	95.0	25	15	140	M24
PKD 7390 TMG/GB5 PKD 7390/32 TMG/GB5 PKD 7390/42 TMG/GB5	450	*350	24	400	5.0	184	8 x 18	*90	170	95.0	25	15	140	M24
PKD 8390 TMG/GB5 PKD 8390/42 TMG/GB5 PKD 8390/52 TMG/GB5	550	*450	28	500	5.0	210	8 x 18	*110	210	116.0	28	15	180	M24
PKD G8390 TMG/GB5 PKD G8390/52 TMG/GB5	660	*550	32	600	6.0	262	8 x 22	*120	210	127.0	32	15	180	M24
PKD 9390 TMG/GB5 PKD 9390/52 TMG/GB5	660	*550	32	600	6.0	262	8 x 22	*140	250	148.0	36	25	200	M24
PKD G 9390 TMG/GB5 PKD G 9390/62 TMG/GB5 PKD G 9390/63 TMG/GB5	660	*550	35	600	8.0	302	8 x 26	*190	320	200.0	45	10	300	M30x60

PGR DRIVE TECHNOLOGIES

TR KONİK SIKTIRMALI GÜÇLENDİRİLMİŞ B5 FLANŞI

EN REINFORCED FLANGE B5 WITH SHRINK DISC

DE VERSTÄRKTER B5 FLANSCH MIT SCHRUMPFSCHEIBE

GB5 - DG / KS

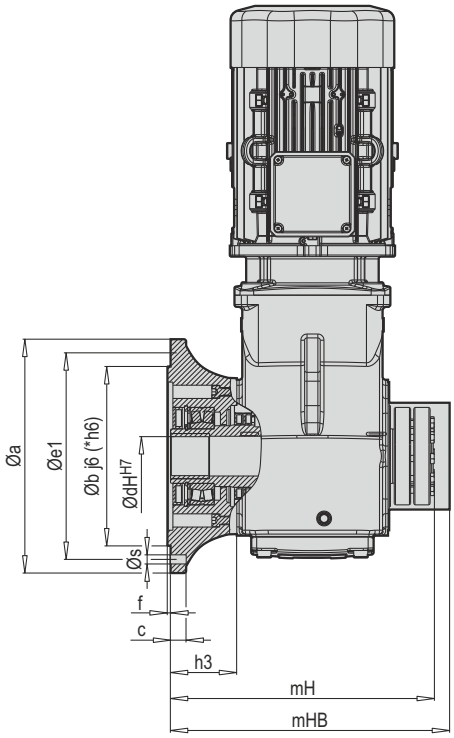

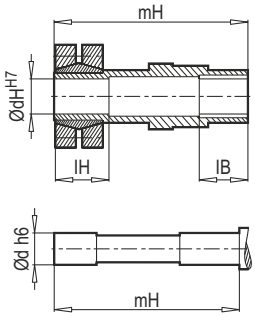

Tip / Type / Typ	a	b	c	e1	f	h3	s	dH / d	mH	mHB	lB	lH
PKD 1390 DG/KS-GB5 PKD 1490 DG/KS-GB5	200	130	12	165	3.5	75	4 x 11	35	263	278	41	40
PKD 2390 DG/KS-GB5 PKD 2490 DG/KS-GB5	250	180	16	215	4.0	86	4 x 13.5	40	308	319	41.5	44
PKD 3390 DG/KS-GB5 PKD 3490 DG/KS-GB5	300	230	20	265	4.0	85	4 x 14	50	337	355	51.5	46
PKD 4390 DG/KS-GB5 PKD 4490 DG/KS-GB5	350	*250	20	300	5.0	135	4 x 18	60	427.5	446	61.5	58
PKD 5390 DG/KS-GB5 PKD 5490 DG/KS-GB5	400	*300	22	350	5.0	166	4 x 18	70	537	558	71	74
PKD 6390 DG/KS-GB5 PKD 6390/32 DG/KS-GB5 PKD 6390/42 DG/KS-GB5	450	*350	24	400	5.0	184	8 x 18	80	609	629	81	82
PKD 7390 DG/KS-GB5 PKD 7390/32 DG/KS-GB5 PKD 7390/42 VLB5/KS	450	*350	24	400	5.0	184	8 x 18	80	609	629	81	82
PKD 8390 DG/KS-GB5 PKD 8390/42 DG/KS-GB5 PKD 8390/52 DG/KS-GB5	550	*450	28	500	5.0	210	8 x 18	110	695	734	81	74
PKD G8390 DG/KS-GB5 PKD G8390/52 DG/KS-GB5	660	*550	32	600	6.0	262	8 x 22	125	851	892	81	98
PKD 9390 DG/KS-GB5 PKD 9390/52 DG/KS-GB5	660	*550	32	600	6.0	262	8 x 22	150	955	998	101	98
PKD G 9390 DG/KS-GB5 PKD G 9390/62 DG/KS-GB5 PKD G 9390/63 DG/KS-GB5	660	*550	35	600	8.0	302	8 x 26	160/155	1089	1134	95	140

TR TORK KOLU | EN TORQUE ARM | DE DREHMOMENTSTÜTZE

TK

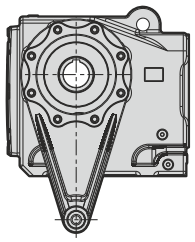

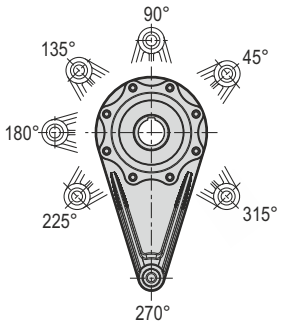

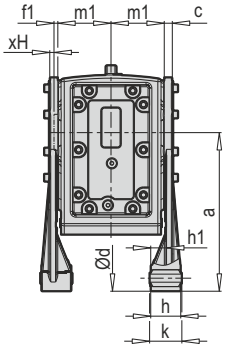

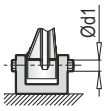

Tork kolunun pozisyonlanması
Positions of torque arm / Positionierung der Drehmomentstütze

PKD 1390 DG/TK … 7390 DG/TK için 45°…270°
PKD B0290 DG/TK … H5290 DG/TK için 90°…315°

PKD 1390 DG/TK … 7390 DG/TK for 45°…270°
PKD B0290 DG/TK … H5290 DG/TK for 90°…315°

PKD 1390 DG/TK … 7390 DG/TK für 45°…270°
PKD B0290 DG/TK … H5290 DG/TK für 90°…315°

Tip / Type / Typ	**Montaj Ölçüleri** Mounting Dimensions Montageabmessungen								**Ana Ölçüler** Outline Dimensions Hauptabmessungen	
	a	c	d	d1	f1	h	h1	k	m1	xH
PKD A 0290 DG/TK	--	--	--	--	--	--	--	--	55	3
PKD B 0290 DG/TK	120	10	40	10.5	3	32	10	36	62	4
PKD C 1290 DG/TK	160	14	40	10.5	3	32	11.5	36	75	4
PKD F 4290 DG/TK	160	14	40	10.5	3	32	11.5	36	78	4
PKD H 5290 DG/TK	200	14	60	16.5	4	56	26	60	87	5
PKD 1390 DG/TK **PKD 1490 DG/TK**	160	16	40	10.5	3	32	11.5	36	68	3
PKD G 1390 DG/TK **PKD G 1490 DG/TK**	160	16.5	40	10.5	3	32	11.5	36	68	3
PKD 2390 DG/TK **PKD 2490 DG/TK**	200	16.5	60	16.5	4	56	26	60	82	4
PKD 3390 DG/TK **PKD 3490 DG/TK**	250	20.5	60	16.5	3	56	22	60	97	5
PKD 4390 DG/TK **PKD 4490 DG/TK**	300	24	80	25	7	92	42	100	108	5
PKD 5390 DG/TK **PKD 5490 DG/TK**	350	26.5	80	25	4	92	42	100	141	5
PKD 6390 DG/TK **PKD 6390/32 DG/TK** **PKD 6390/42 DG/TK**	450	28	80	25	5	92	42	100	165	5
PKD 7390 DG/TK **PKD 7390/32 DG/TK** **PKD 7390/42 DG/TK**	450	28	80	25	5	92	42	100	165	5

Sipariş verirken tork kolunun pozisyonunu belirtiniz (Örn. 270°).
Tork kolu L yada R tarafına bağlanabilir.

Please indicate position of torque arm when ordering. (Ex. 270°)
Torque arm can be connected at side of L and R.

Geben Sie bei der Bestellung die Position der Drehmomentstütze an (zB 270°).
Die Drehmomentstütze kann L- oder R-seitig angebunden werden.

TR TORK KOLU PLATFORMU | EN TORQUE ARM PLATFORM | DE DREHMOMENTSTÜTZE-PLATTFORM

TKP

R

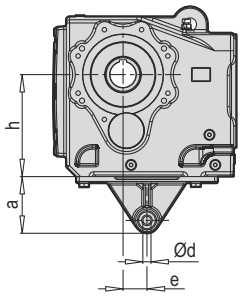

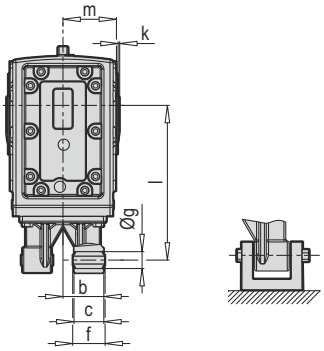

L

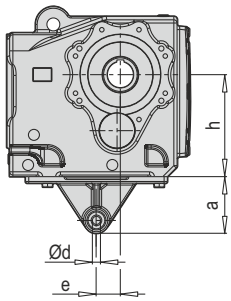

PKD 1390 DG/TKP ... PKD 7390 DG/TKP

Tip / Type / Typ	a	b	c	Ød	e	f	Øg	h	k	l	m
PKD 1390 DG/TKP PKD 1490 DG/TKP PKD G 1390 DG/TKP PKD G 1490 DG/TKP	70.5	52	32	10.5	30	36	45	112	3	160	68
PKD 2390 DG/TKP PKD 2490 DG/TKP	87	65	56	16.5	45	60	60	143	4	200	82
PKD 3390 DG/TKP PKD 3490 DG/TKP	100	80	56	16.5	52.5	60	60	180	5	250	97
PKD 4390 DG/TKP PKD 4490 DG/TKP	123	96	92	25	60	100	80	217	5	300	108
PKD 5390 DG/TKP PKD 5490 DG/TKP	128	110	92	25	70	100	80	262	5	350	141
PKD 6390 DG/TKP	175	130	92	25	74	100	80	315	5	450	165
PKD 7390 DG/TKP	175	130	92	25	74	100	80	315	5	450	165

R

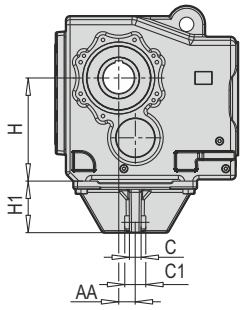

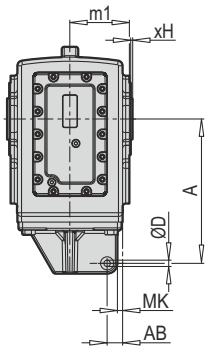

L

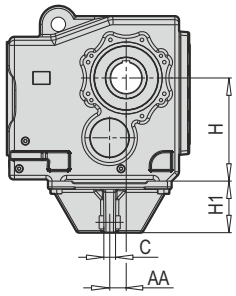

PKD 8390 DG/TKP ... PKD G 9390 DG/TKP

Tip / Type / Typ	TKP Montaj Ölçüleri / Mounting Dimensions / Montageabmessungen									Ana Ölçüler Outline Dimensions Hauptabmessungen	
	A	AA	AB	C	C1	D	H	H1	MK	m1	xH
PKD 8390 DG/TKP PKD 8390/42 DG/TKP PKD 8390/52 DG/TKP	550	75	95	56	156	31	375	225	45	195	8
PKD G 8390 DG/TKP PKD G 8390/52 DG/TKP	650	55	95	56	156	31	450	250	5	235	8
PKD 9390 DG/TKP PKD 9390/52 DG/TKP	700	80	108	56	156	31	500	250	58	288	10
PKD G 9390 DG/TKP PKD G 9390/62 DG/TKP PKD G 9390/63 DG/TKP	900	70	140	80	380	52	600	300	45	320	10.5

TR TORK KOLU PLATFORMU DELİKLERİ | EN TORQUE ARM PLATFORM HOLES | DE LÖCHER DREHMOMENTSTÜTZE-PLATTFORM

GÖVDEDEN MONTAJLI /
CASE MOUNTED / GEHÄUSE FLANSCHMONTAGE

PKD 1390...PKD 5390

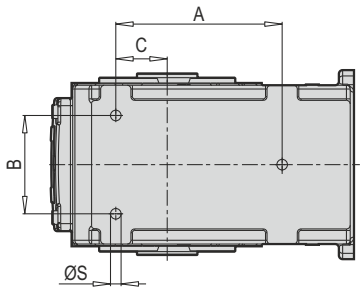

PKD 6390...PKD G 9390

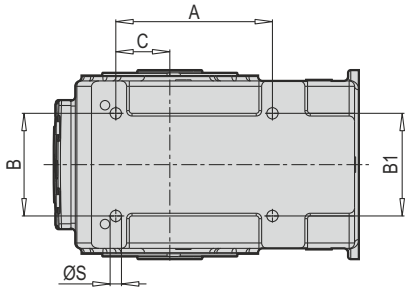

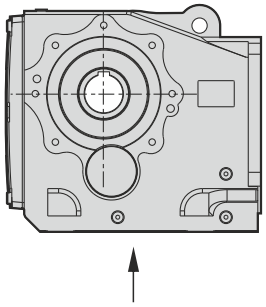

Tip / Type / Typ	A	B	B1	C	ØS
PKD 1390 DG/TKP PKD 1490 DG/TKP	152	60	-	35	M10x16
PKD G 1390 DG/TKP PKD G 1490 DG/TKP	152	60	-	35	M10x16
PKD 2390 DG/TKP PKD 2490 DG/TKP	152	100	-	42	M12x20
PKD 3390 DG/TKP PKD 3490 DG/TKP	190	110	-	55	M12x20
PKD 4390 DG/TKP PKD 4490 DG/TKP	220	130	-	68	M16x25
PKD 5390 DG/TKP PKD 5490 DG/TKP	277	185	-	92	M16x25
PKD 6390 DG/TKP PKD 6390/32 DG/TKP PKD 6390/42 DG/TKP	345	220	170	120	M20x30
PKD 7390 DG/TKP PKD 7390/32 DG/TKP PKD 7390/42 DG/TKP	290	190	190	100	M24x36
PKD 8390 DG/TKP PKD 8390/42 DG/TKP PKD 8390/52 DG/TKP	430	260	260	140	M24x36
PKD G 8390 DG/TKP PKD G 8390/52 DG/TKP	430	320	320	160	M36x55
PKD 9390 DG/TKP PKD 9390/52 DG/TKP	520	400	400	180	M36x55
PKD G 9390 DG/TKP PKD G 9390/62 DG/TKP PKD G 9390/63 DG/TKP	580	440	440	220	M42x72

TR KORUMA KAPAĞI | EN PROTECTION COVER | DE SCHUTZDECKEL

Delik milli şaft koruma kapağı
Cover cup for hollow shaft / Schutzdeckel für Hohlwelle

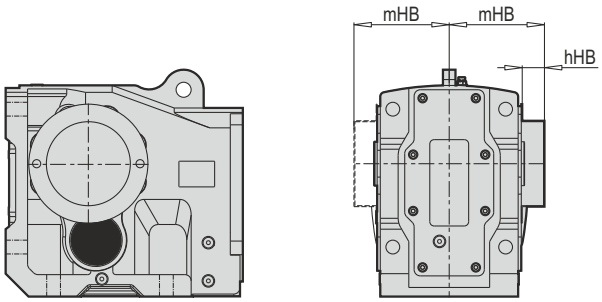

DA

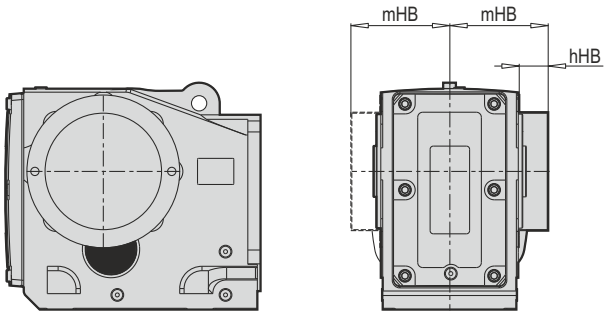

DG

Tip Type Typ	Montaj ve Ana Ölçüleri Outline and Mounting Dimensions Montage und Hauptabmessungen	
	hHB	mHB
PKD A 0290 DA	35	87.5
PKD B 0290 DA	38	100
PKD C 1290 DA	43	118
PKD F 4290 DA	43	121
PKD H 5290 DA	45	132
PKD 1390 DA PKD 1490 DA	38	109
PKD G 1390 DA PKD G 1490 DA	38	109
PKD 2390 DA PKD 2490 DA	43	129
PKD 3390 DA PKD 3490 DA	45	145
PKD 4390 DA PKD 4490 DA	46	161
PKD 5390 DA PKD 5490 DA	48	193
PKD 6390 DA	55	225
PKD 7390 DA	55	225
PKD 8390 DA	62	262
PKD G 8390 DA	55	293

Tip Type Typ	Montaj ve Ana Ölçüleri Outline and Mounting Dimensions Montage und Hauptabmessungen	
	hHB	mHB
PKD A 0290 DG	35	87.5
PKD B 0290 DG	38	100
PKD C 1290 DG	43	118
PKD F 4290 DG	43	121
PKD H 5290 DG	45	132
PKD 1390 DG PKD 1490 DG	43	111
PKD G 1390 DG PKD G 1490 DG	43	111
PKD 2390 DG PKD 2490 DG	45	127
PKD 3390 DG PKD 3490 DG	48	145
PKD 4390 DG PKD 4490 DG	56	164
PKD 5390 DG PKD 5490 DG	61	202
PKD 6390 DG	64	229
PKD 7390 DG	64	229
PKD 8390 DG	67	262
PKD G 8390 DG	86	321

TR IP 66 UYGULAMASI

EN PROTECTION IP 66

DE SCHUTZ IP 66

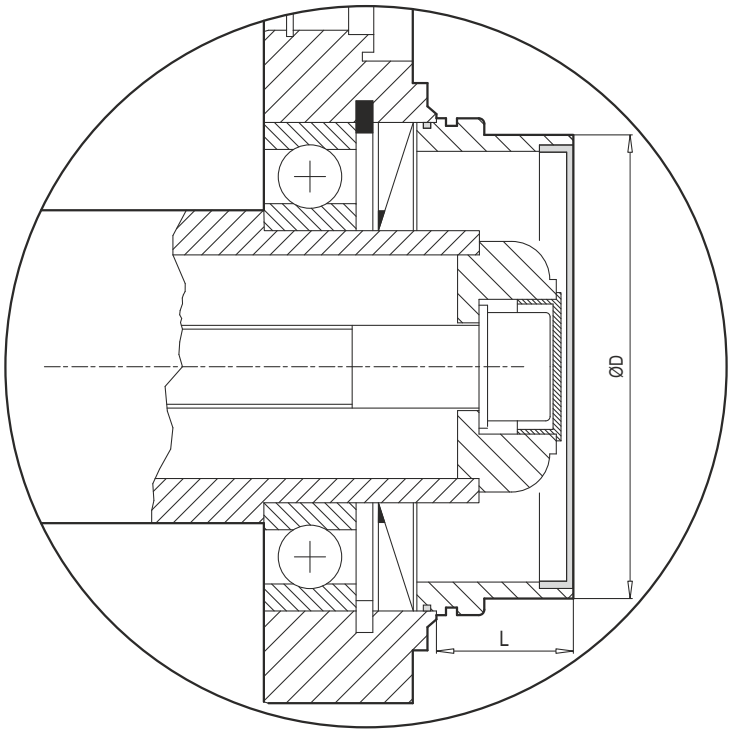

Tip / Type / Typ		ØD	L
PKD 1390 DA - KK 66	PKD 1490 DA - KK 66	81	25
PKD 1390 DG/B14 - KK 66	PKD 1490 DG/B14 - KK 66	86	28
PKD G 1390 DA - KK 66	PKD G 1490 DA - KK 66	81	25
PKD G 1390 DG/B14 - KK 66	PKD G 1490 DG/B14 - KK 66	86	28
PKD 2390 DA - KK 66	PKD 2490 DA - KK 66	96	30
PKD 2390 DG/B14 - KK 66	PKD 2490 DG/B14 - KK 66	105	35
PKD 3390 DA - KK 66	PKD 3490 DA - KK 66	105	35
PKD 3390 DG/B14 - KK 66	PKD 3490 DG/B14 - KK 66	116	35
PKD 4390 DA - KK 66	PKD 4490 DA - KK 66	146	35
PKD 4390 DG/B14 - KK 66	PKD 4490 DG/B14 - KK 66	146	38
PKD 5390 DA - KK 66	PKD 5490 DA - KK 66	155	38
PKD 5390 DG/B14 - KK 66	PKD 5490 DG/B14 - KK 66	189	38
PKD 6390 DA - KK 66		189	38
PKD 6390 DG/B14 - KK 66		189	35
PKD 7390 DA - KK 66		189	38
PKD 7390 DG/B14 - KK 66		216	35
PKD 8390 DA - KK 66		246	45
PKD 8390 DG/B14 - KK 66		261	50
PKD G 8390 DA - KK 66		261	55
PKD G 8390 DG/B14 - KK 66		316	50

TR SU SOĞUTMALI

Helisel konik dişlili ve Paralel şaft montajlı redüktörler için opsiyonel olarak entegre edilmiş bir ısı eşanjörü mevcuttur. Redüktörü soğutan soğutma suyu eşanjörün içinden akar. PGR redüktör sıcaklığının ve soğutma suyunun akışının izlenmesini önerir. Bunun sebebi soğutma serpantinin herhangi bir yağ haznesinde bulunmamasıdır. Bu soğutma aynı zamanda patlama potansiyeli olan atmosferlere (ATEX) sahip uygulamalar için de uygundur. Düşük sıcaklıklarda ısı eşanjörü aynı zamanda redüktöre ısı sağlayabilir.

EN WATER COOLING

The heat exchanger is avaliable for helical bevel gear units and parallel shaft mounted reducers optionally. The coolant which cool reducer flows inside exchanger. PGR advice you to follow flowing of coolant. The reason for this is cooling serpantine is not inside any oil tube. This cooler is also suitable for implementations which has risk of explosion. (ATEX) At low temperature, heat exchanger may provide heat to reducer.

DE MIT WASSERKÜHLUNG

Bei Flachgetrieben und Kegelradgetrieben ist optional ein intergrierter Wärmetauscher möglich. Der Wärmetauscher wird vom Kühlwasser durchströmt, welches das Getriebe kühlt. PGR empfiehlt eine Temperaturüberwachung oder Kühlwasserdurchfluβüberwachung. Denn die Kühlschlange liegt nicht im Ölraum. Diese Kühlung ist auch für Anwendungen in explosionsgefährdeten Bereichen (ATEX) geeignet. Bei niedrigen Temperaturen kann der Wärmetauscher auch das Getriebe mit Wärme versorgen.

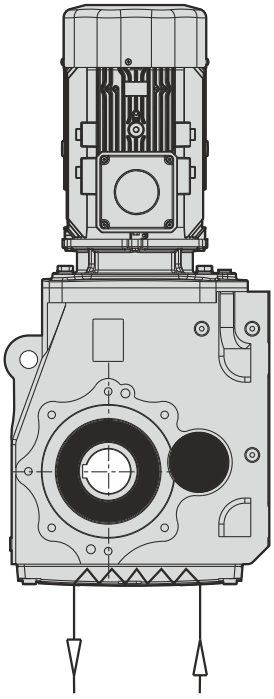

Su soğutma ünitesinin kullanılabileceği montaj pozisyonları
Table shows that suitability of water cooling for which mounting positions
Mögliche Einbaulagen bei Wasserkühlung

Tip / Type / Typ	**Montaj Pozisyonları** / Mounting Positions / Montagepositionen					
	M1	**M2**	**M3**	**M4**	**M5**	**M6**
PKD 8390			✓	✓		
PKD G 8390			✓	✓		
PKD 9390			✓	✓		
PKD G 9390			✓	✓		

TR M4 MONTAJ POZİSYONU İÇİN İLAVE YAĞ HACMİ

Motorlu ve mil girişli dikey olarak monte edilmiş redüktörlerde 1. Kademenin yağlanması için yağ seviyesi yüksektir. Dikey montaj pozisyonu olan M4 pozisyonunda isteğe bağlı olarak ilave yağ hacim ünitesinin kullanılması, yağın köpürme yaptığı durumlarda extra bir hacim sağlayarak havalandırma tapasından yağ sızmasını önler.
PGR tahvil oranının 20'den küçük olduğu ve PA/PF 42, PD/PM 42, PKD 4390 dan büyük, gövdelerin dikey montajlarında ilave yağ hacim ünitesinin kullanımı kesinlikle önerilir. Aksi kullanım durumunda PGR ürünü garanti kapsamına almamaktadır.
PGR ayrıca tahvil oranının 20'den küçük ve motor dönüş hızının 1800 d/dk'den büyük olduğu küçük gövdeli redüktörler için de ilave yağ hacim ünitesinin kullanımını önemle tavsiye eder.

44 - 46

EN ADDITIONAL LUBRICANT VOLUME FOR MOUNTING POSITION M4

Reducers which are with motor, solid shaft and vertical mounting position has high oil level for lubricating first stage. The usage of additional lubricant tube at M4 mounting position upon request prevents leekage when oil is foamed by providing extra volume.
PGR strictly recommends usage of additional oil tube when the ratio number is less than 20, larger than PA/PF 42, PD/PM 42, PKD 4390 cases and vertical mounting positions. Otherwise, the reducer is at out of guarantee.

In addition to this, PGR strictly recommends usage of additional oil tube when the ratio number is less than 20, notor rotation speed is bigger than 1800 min^{-1} and smaller cases.

44-46

DE ZUSÄTZLICHES ÖLVOLUMEN FÜR M4 EINBAUPOSITION

Bei Getrieben mit Motor- und Wellenantrieb, die vertikal eingebaut sind, ist zur Schmierung der 1. Stufe der Ölstand höher. Der optionale Einsatz eines zusätzlichen Ölausgleichsbehälters bei der vertikalen Einbaulage M4 verhindert Ölaustritt am Entlüftungsstopfen durch zusätzliches Volumen bei eventueller Ölschaumbildung.
PGR empfiehlt daher dringend bei Übersetzungen İges < 20 und bei Gehäusen ab PA/PF 42, PD/PM 42, PKD 4390 Ölausgleichsbehälter bei der vertikalen Einbaulage einzusetzen. Andernfalls ist das Getriebe von der Garantie ausgenommen.
PGR empfiehlt außerdem dringend die Verwendung eines zusätzlichen Ölausgleichsbehälters für kleinere Getriebe mit einem Übersetzungsverhältnis von weniger als 20 und einer Motordrehzahl von mehr als 1800 U/min.

44-46

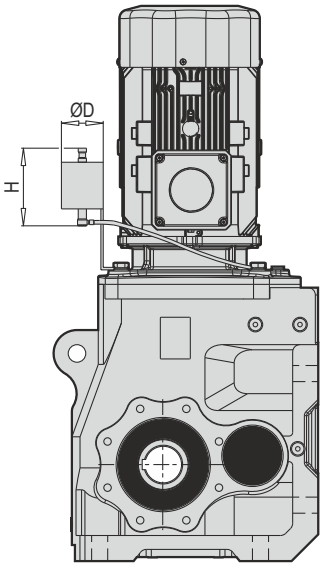

Tip Type Typ	Boyut Size Abmessung	ØD [mm]	H [mm]	[kg]
PKD 4390 / PKD 4490	I	100	180	6
PKD 5390 / PKD 5490				
PKD 6390	II	150	300	7
PKD 7390				
PKD 8390				
PKD G 8390	III	180	300	8
PKD 9390				
PKD G 9390				

TR YAĞ SOĞUTMALI

EN OIL COOLING

DE ÖLKÜHLER

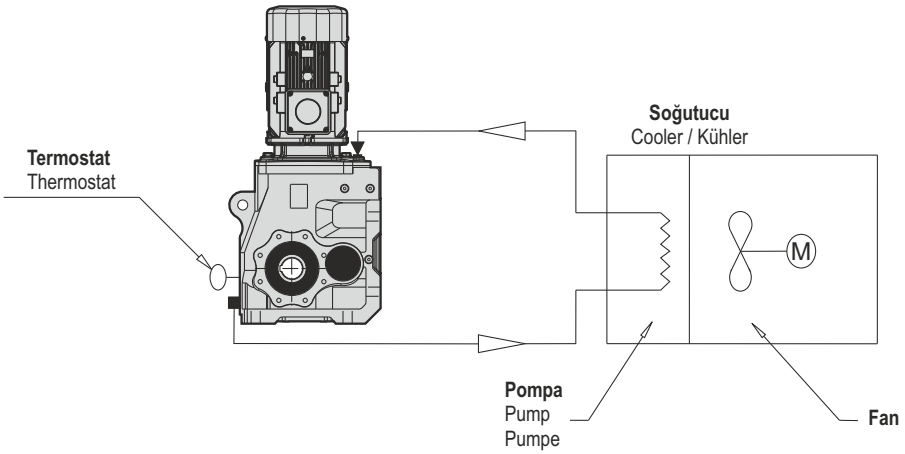

■ Çıkış = Emme hattı

▼ Yağ seviyesi = Basınç hattı

Redüktör içerisindeki yağ bir pompa vasıtası ile çekilir ve bu yağ bir ısı eşanjöründen geçer. Yağ, bir fan tarafından oluşturulan hava akımı ile soğutulur. Yağ ısı eşanjöründen dışarıya taşınır ve redüktöre geri gönderilir. Sıcaklık bir termostat ile kontrol edilir. PGR bu sıcaklığın izlenmesini önerir.

■ Output = Suction line

▼ Oil level = Pressure line

Picture which is above on this page shows cycle of the cooling unit. There is a thermostat on the gear unit for checking oil temperature. Oil flows from suction line to pressure line which is provided by a pump. In this way, oil temperature is cooled down by a fan which is supplying air flow of oil. Then, oil flows to the house of gear unit.

■ Ablaß = Saugleitung

▼ Ölstand = Druckleitung

Das Getriebeöl wird von einer Pumpe angesaugt und durchströmt einen Wärmetauscher. Durch einen von einem Ventilator erzeugten Luftstrom erfolgt die Ölkühlung. Aus dem Wärmetauscher wird das Öl wieder in das Gehäuse zurückgefördert. Die Temperaturregelung erfolgt über einen Thermostaten. Eine Temperaturüberwachung wird empfohlen.

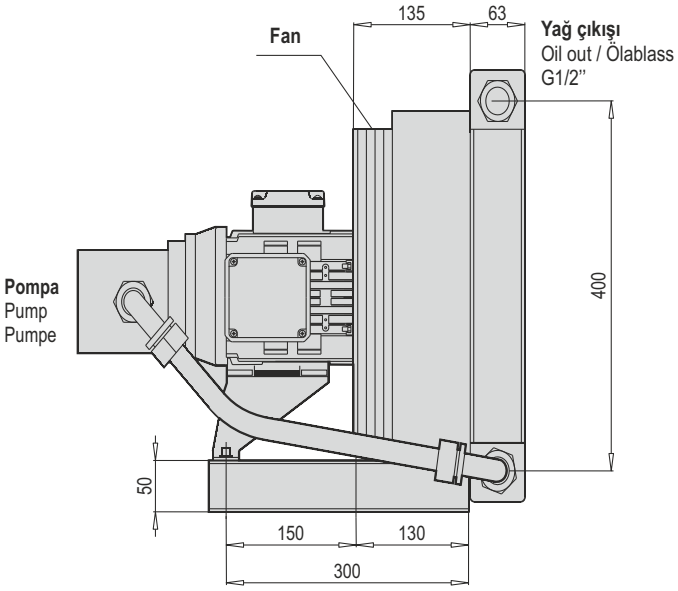

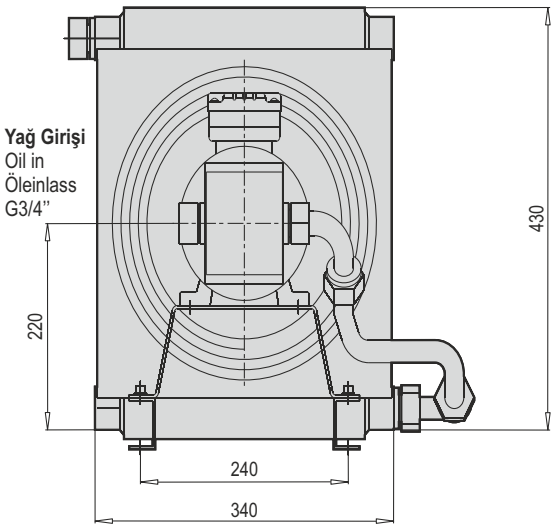

* Potansiyel patlayıcı atmosferli alanlar için uygun değildir.

* Not suited for areas with potantially explosive atmospheres

*Nicht geeignet für Bereiche mit explosionsgefährdeter Atmosphäre.

Dizayn

Soğutucu	: TFS/A 8,5-400-F-03-11
Düşürme	: Dış 1/2"/ iç 3/4"
Motorlar	: Spannung 3x400 V
Çıkış gücü	: 0,55 kW
Akım	: 1,7 A
Hız	: 1350 d/dk
Koruma sınıfı	: IP 55
Yalıtım sınıfı	: F
Sıcaklık sınıfı	: B

Aşağıdaki özelliklerde mevcuttur:

- Özel voltaj 60 HZ - Özel motor
  Ağırlık : 35 kg

Design

Cooler	: TFS/A 8,5-400-F-03-11
Reduction	: Out 1/2"/ in 3/4"
Motors	: Spannung 3x400 V
Output Power	: 0,55 kW
Rated Current	: 1,7 A
Speed	: 1350 rpm
Protection Class	: IP 55
Insulation Class	: F
Temperature Class	: B

Available with:

- Special voltage 60 HZ - Special motor
  Weight : 35 kg

Entwurf

Kühler	: TFS/A 8,5-400-F-03-11
Reduzierung	: Aus 1/2"/ in 3/4"
Motoren	: Spannung 3x400 V
Leistung	: 0,55 kW
Strom	: 1,7 A
Drehzahl	: 1350 min.
Schutzklasse	: IP 55
Isolationsklasse	: F
Temperaturklasse	: B

Lieferbar mit

- Spezialspannung 60 Hz - Sondermotor
  Gewicht: 32 kg

TR MEKANİK KEÇE

EN MECHANICAL SEAL

DE GLEITRINGDICHTUNG

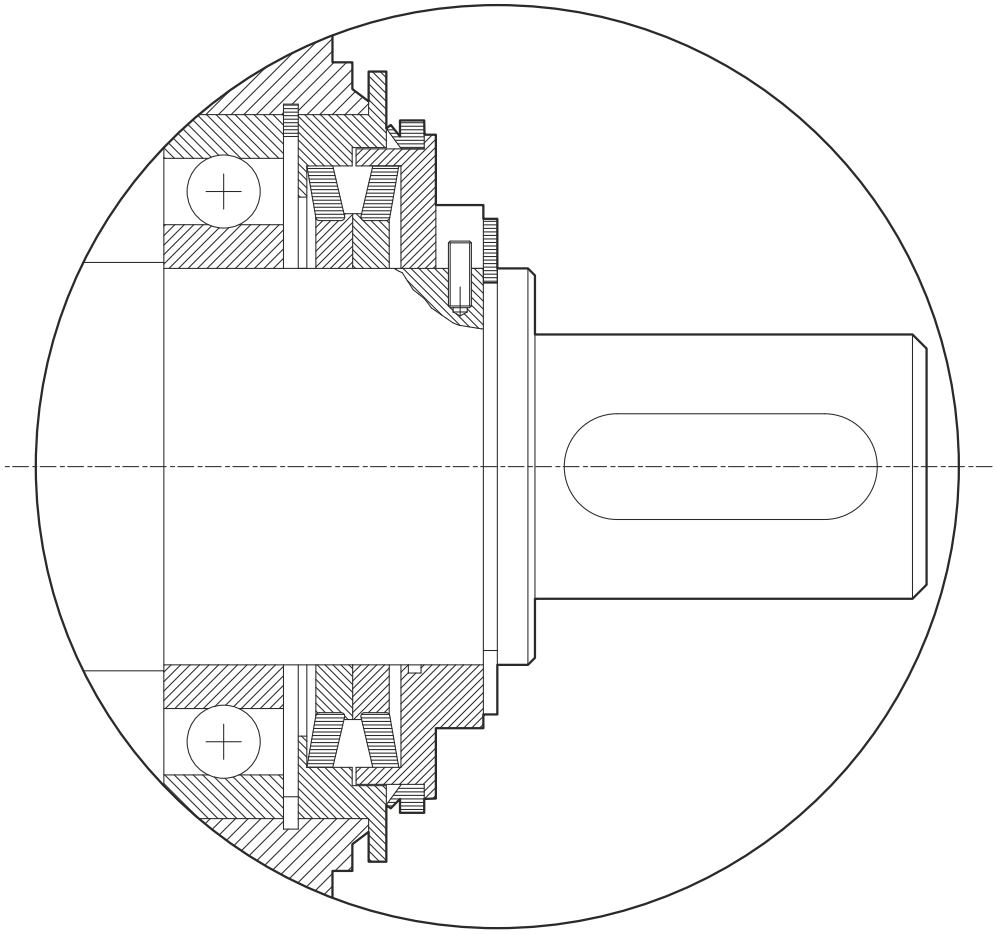

Mekanik keçe kullanımı özellikle uzun süreli maruz kalınan kötü çalışma koşullarına uygundur. Sıvı yoğunluğunun çok olduğu daldırmalı çalışma ortamlarında maximum seviye sızdırmazlık sağlar. Bu keçe tipi birçok olumsuz dış çevre koşullarından (Aşırı tozlu, sulu) yüksek seviyede koruma sağlar.

The use of mechanical seals is especially suitable for long-term poor working conditions. It provides maximum level of leakproofing for working areas which is immersion and high density of liquid. This type of seal provides a high level of protection from many unfavorable external environmental conditions (extreme dust, water).

Der Einsatz von Gleitringdichtungen eignen sich besonders bei langfristiger Belastung durch schlechte Arbeitsbedingungen. Diese bieten maximale Undurchlässigkeit in Arbeitsumgebungen unter Wasser mit hoher Feuchtigkeit. Dieser Dichtungstyp bietet einen hohen Schutz vor vielen schädlichen Umwelteinwirkungen (extremer Staub, Wasser).

TR ÇEKTİRME KİTİ

Çektirme Kiti
Değişik gövde büyüklükleri için opsiyonel olarak çektirme kitlerimiz şaft çıkışlı dizaynlarımızda mevcuttur.
Çektirme kiti için kullanım gereksinimleri:
- Kullanılan müşteri milinin alın tarafının merkezinde DIN 332/2 standartlarına uygun bir delik olmalıdır.
- Müşteri mili, faturalı ya da faturasız olsa da çektirme kiti ile uyumludur.
- I numaralı montaj pozisyonu olması halinde, müşteri mili redüktör şaftının içinde bulunan segman ile tutturulur. (Parça A)
- II numaralı montaj pozisyonu olması halinde, müşteri milinin üzerinde bulunan fatura kullanılarak doğrudan redüktör şaftı üzerine tutturulur. (Parça B)

EN PULLER KIT

Puller Kit
The puller kit is optionally available on shaft mounted gear units.
Using conditions:
- The centre hole must be DIN 332/2 for customer solid shaft.
- The customer shaft can be fixed with the puller kit (with shoulder or withour shoulder)
- When the assembly in Fig. I is used, the customer shaft is fasten by the circlip in the gear unit shaft.(Track A)
- When the assembly in Fig. II is used,It is fasten directly to the gearbox shaft using the invoice on the customer shaft.

DE AUFZIEHVORRICHTUNG

Aufziehvorrichtung
Für verschiedene Gehäusegrößen sind optional Abziehvorrichtungen für Ausführungen mit Hohlwellenabtrieb erhältlich.
Nutzungsanforderungen für die Abziehvorrichtung:
- In der Stirnmitte der Kundenwelle sollte eine Bohrung nach DIN 332/2 vorhanden sein.
- Die Kundenwelle ist mit der Abziehvorrichtung kompatibel, mit oder ohne Wellenabsatz.
- Bei Bauform I wird die Kundenwelle mit dem Sicherungsring in der Getriebewelle befestigt. (Teil A)
- Bei Einbaulage II wird die Kundenwelle am Wellenabsatz direkt auf der Getriebewelle befestigt (Teil B)

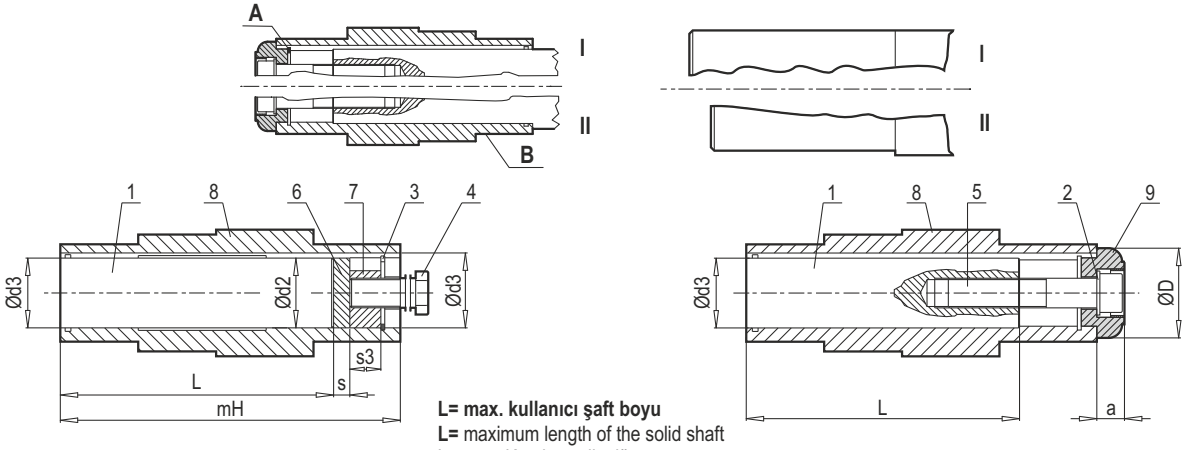

DEMONTAJ / DISASSEMBLY

L= max. kullanıcı şaft boyu
L= maximum length of the solid shaft
L= max. Kundenwellenlänge

MONTAJ / ASSEMBLY

1) Müşteri mili
2) Rondela DIN 127
3) * İç Segman DIN 472
4) * Çektirme cıvatası
5) Alyan başlı cıvata DIN 912
6) * Yaylı rondela
7) * Somun
8) Redüktör şaftı
9) Çektirme rondelası
*PGR tarafından temin edilmez.

DEMONTAJ:
1) Alyanbaşlı cıvata sökülmelidir. (5)
2) Çektirme rondelası takılmalıdır. (9)
3) Yaylı rondela takılmalıdır. (6)
4) Somun yerleştirilmelidir. (7)
5) Segman takılmalıdır. (8)
6) Çektirme cıvatası gevşetilerek müşteri mili şafttan ayrılmalıdır. (4)

MONTAJ:
1) Müşteri mili, redüktör şaftının içine yerleştirilmelidir. (8)
2) Çektirme rondelası redüktör şaftının içine yerleştirilmelidir. (9)
3) Çektirme rondelası ile alyan başlı cıvata ve rondela birbirine sabitlenmelidir. (9-5-2)

Kullanım Koşulları (Montaj için):
-Müşteri milinin merkezinde DIN 332/2 standartlarınca dişli açılmış delik bulunmalıdır.
-Müşteri milinin boyu "L" uzunluğundan büyük olmamalıdır. Aksi halde çektirme elemanlarını kullanmak mümkün olmayacaktır. (3-6-7)

Kullanım Koşulları (Demontaj için):
-Demontaj ölçüleri fabrika standartlarından yararlanılarak alınabilir.
-Demontaj işlemi yalnızca boyutu "L" yi aşmayan delik mile geçecek dolu miller için geçerlidir.

1) Customer's shaft
2) Washer DIN 127
3) * Circlip DIN 472
4) * Puller screw
5) Socket head screw DIN 912
6) * Thrust washer
7) * Nut
8) Hollow shaft
9) Puller washer
*Star signs are shown this item are not provided by PGR

DISASSEMBLING:
1) Loosen the socket head screw (5)
2) Remove puller washer (9)
3) Install spring washer (6)
4) Install nut(7)
5) Install circlip (3)
6) Remove solid shaft from hollow shaft with using puller screw (4)

ASSEMBLING:
1) The customer shaft must be mounted inside the gear units shaft. (8)
2) The puller washer must be mounted inside the gear units shaft. (9)
3) The bolt and washer must be fixed with the puller washer. (9-5-2)

Usage Conditions (Assembling):
- The user shaft must be threaded to the center according to DIN 332/2.
- The customer shaft must not exceed the "L" length, otherwise the puller cannot be applied. (pos. 3,6,7)

Usage Conditions (for disassembly):
- Disassembly dimensions can be taken by using factory standards.
- The disassembly procedure is only valid for solid shafts which will be connected to solid shaft and dimension does not exceed "L".

1) Kundenwelle
2) Federring DIN 127
3) * Sicherungsring DIN 472
4) * Abziehschraube
5) Innensechskantschraube DIN 912
6) * Federscheibe
7) * Schraubenmutter
8) Getriebewelle
9) Abziehscheibe
*wird Nicht von PGR bereitgestellt.

DEMONTAGE:
1) Innensechskantschraube muss entfernt werden. (5)
2) Die Abziehscheibe muss entfernt werden. (9)
3) Federscheibe muss eingelegt sein. (6)
4) Die Schraubenmutter muss eingesetzt werden. (7)
5) Der Sicherungsring muss montiert sein. (3)
6) Die Kundenwelle sollte durch Lösen der Abziehschraube von der Welle getrennt werden. (4)

MONTAGE:
1) Die Kundenwelle muss in der Getriebewelle befestigt werden. (8)
2) Die Abziehscheibe muss in die Getriebewelle eingelegt werden. (9)
3) Die Abziehscheibe und die Sechskantschraube und der Federring müssen miteinander befestigt werden. (9-5-2)

Nutzungsbedingungen (für Montage):
- In der Mitte der Kundenwelle muss eine Gewindebohrung nach DIN 332/2 vorhanden sein.
- Die Länge der Kundenwelle darf die Länge „L" nicht überschreiten. Andernfalls können die Abziehelemente nicht verwendet werden. (3, 6.7)

Nutzungsbedingungen (für Demontage):
- Demontagemaße können anhand von Werksnormen übernommen werden.
- Das Demontageverfahren gilt nur für Vollwellen, deren Abmessung „L" nicht überschreitet.

TR ÇEKTİRME ÖLÇÜ TABLOSU

EN DIMENSION TABLE OF FIXING ELEMENT

DE GRÖßENTABELLE ABZIEHVORRICHTUNG

Tip / Type	1 L	2	3	4	5	6 d2	6 s	7 d3	7 s3	7	8 d x mH	9 a	9 D
PKD A 0290 DA/Ç	100	A10	I 25 x 1.5	M12	M10 X 45	24.9	3	24.9	12	M12	25 x 116	15	38
PKD B 0290 DA/Ç	115	A6	I 20 x 1.5	M10	M6 X 30	19.9	3	19.9	10	M10	20 x 134	15	38
PKD C 1290 DA/Ç	140	A10	I 30 x 1.5	M12	M10 X 45	29.9	3	29.9	12	M12	30 x 164	20	40
PKD F 4290 DA/Ç	140	A12	I 35 x 1.5	M12	M12 X 55	34.9	3	34.9	16	M16	35 x 170	24.5	45
PKD H 5290 DA/Ç	160	A16	I 40 x 2.0	M16	M16 X 70	39.9	4	39.9	16	M16	40 x 192	25	55
PKD 1390 DA/Ç	120	A10	I 30 x 1.5	M12	M10 X 45	29.9	3	29.9	12	M12	30 x 148	20	40
PKD G1390 DA/Ç	120	A10	I 30 x 1.5	M12	M10 X 45	29.9	3	29.9	12	M12	30 x 148	20	40
PKD 2390 DA/Ç	150	A12	I 35 x 1.5	M16	M12 X 55	34.9	3	34.9	16	M16	35 x 180	24.5	45
PKD 3390 DA/Ç	170	A16	I 40 x 2.0	M16	M16 X 70	39.9	4	39.9	16	M16	40 x 210	25	55
PKD 4390 DA/Ç	200	A16	I 50 x 2.5	M20	M16 X 70	49.9	4	49.9	20	M20	50 x 240	26	65
PKD 5390 DA/Ç	255	A20	I 60 x 3.0	M24	M20 X 90	59.9	5	59.9	24	M24	60 x 300	31	75
PKD 6390 DA/Ç	305	A20	I 70 x 3.0	M24	M20 X 90	69.9	5	69.9	24	M24	70 x 350	32	78
PKD 7390 DA/Ç	305	A24	I 90 x 4.0	M30	M24 X 110	89.9	8	89.9	22	M30	90 x 350	36	102
PKD 8390 DA/Ç	365	A24	I 100 x 4.0	M30	M24 X 110	99.9	8	99.9	30	M30	100 x 420	36.5	120
PKD G8390 DA/Ç	440	A24	I 110 x 5.0	M30	M24 X 110	109.9	10	109.9	30	M30	110 x 500	36	135
PKD 9390 DA/Ç	550	A24	I 120 x 5.0	M36	M24 X 110	119.9	10	119.9	32	M36	120 x 610	34.5	150
PKD G9390 DA/Ç	605	A24	I 160 x 4.0	M36	M24 X 110	159.9	10	159.9	34	M36	160 x 674	34	200

Tip / Type	1 L	2	3	4	5	6 d2	6 s	7 d3	7 s3	7	8 d x mH	9 a	9 D
PKD A 0290 DG/Ç	100	A10	I 25 x 1.5	M12	M10 X 45	24.9	3	24.9	12	M12	25 x 116	20	38
PKD B 0290 DG/Ç	120	A10	I 25 x 1.5	M12	M10 X 45	24.9	3	24.9	12	M12	25 x 138	20	38
PKD C 1290 DG/Ç	140	A10	I 30 x 1.5	M12	M10 X 45	29.9	3	29.9	12	M12	30 x 164	20	40
PKD F 4290 DG/Ç	140	A12	I 35 x 1.5	M12	M12 X 55	34.9	3	34.9	16	M16	35 x 170	24.5	45
PKD H 5290 DG/Ç	160	A16	I 40 x 2.0	M16	M16 X 70	39.9	4	39.9	16	M16	40 x 192	25	55
PKD 1390 DG/Ç	120	A12	I 35 x 1.5	M16	M12 X 55	34.9	3	34.9	16	M16	35 x 148	24.5	45
PKD G1390 DG/Ç	120	A16	I 40 x 2.0	M16	M16 X 70	39.9	4	39.9	16	M16	40 x 148	25	55
PKD 2390 DG/Ç	150	A16	I 40 x 2.0	M16	M16 X 70	39.9	4	39.9	16	M16	40 x 180	25	55
PKD 3390 DG/Ç	170	A16	I 50 x 2.5	M20	M16 X 70	49.9	4	49.9	20	M20	50 x 210	26	65
PKD 4390 DG/Ç	195	A20	I 60 x 3.0	M24	M20 X 90	59.9	5	59.9	24	M24	60 x 240	30	75
PKD 5390 DG/Ç	255	A20	I 70 x 3.0	M24	M20 X 90	69.9	5	69.9	24	M24	70 x 300	31.5	95
PKD 6390 DG/Ç	295	A20	I 80 x 4.0	M30	M20 X 100	79.9	8	79.9	30	M30	80 x 350	32	88
PKD 7390 DG/Ç	305	A24	I 90 x 4.0	M30	M24 X 110	89.9	8	89.9	22	M30	90 x 350	36	102
PKD 8390 DG/Ç	360	A24	I 110 x 5.0	M30	M24 X 110	109.9	10	109.9	30	M30	110 x 420	36.5	135
PKD G 8390 DG/Ç	440	A24	I 120 x 5.0	M36	M24 X 110	119.9	10	119.9	32	M36	120 x 500	36.5	150
PKD 9390 DG/Ç	550	A24	I 150 x 5.0	M36	M24 X 110	149.9	10	149.9	32	M36	150 x 610	34.5	200
PKD G 9390 DG/Ç	605	A24	I 160 x 4.0	M36	M24 X 110	159.9	10	159.9	34	M36	160 x 674	34	200

Tabloda belirtilen numaralar Sayfa 74' de açıklanmaktadır.
The numbers which are specified at table are explained on Page 74
Die in der Tabelle angegebenen Nummern werden auf Seite 74 erklärt.

TR MOTOR PLATFORMU | EN MOTOR PLATFORM INSTALLATION | DE MOTORKONSOLEN

Motor Platformu Ölçüleri /
Motor Platform Dimensions / Abmessungen der Motorkonsole

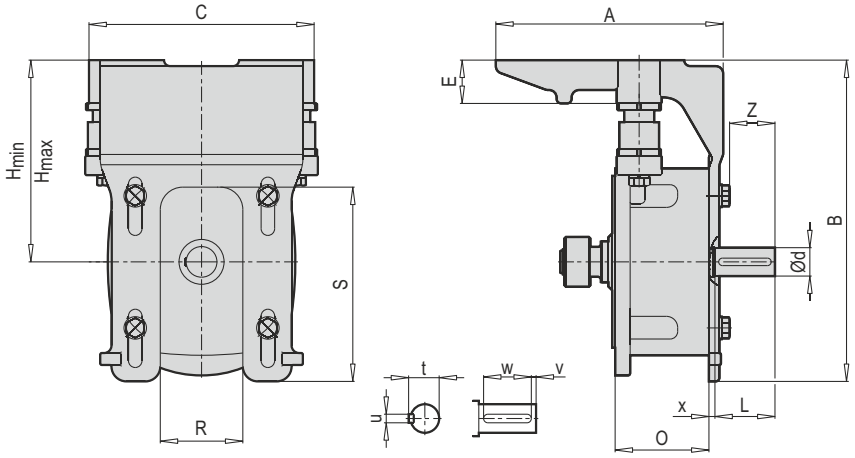

Tip Type Typ	Bağlantı boyutları ve platform ölçüleri Connection and Platform dimensions Anschlussmaße und Motorkonsolenmaße										Mil Ölçüleri Shaft size Wellenmaße				Flanş Flange Flansch
	A	B	C	E	R	S	H min	H max	Z	O	Ød L	t u	v w	x	
MK I 63 M - 100 L	224	253	206	45	60	140	153	173	41	121.5	24 50	27 8	5 40	8	160 S
MK II 80 M - 112 M	238	320	252	50	66	145	199	224	48	115.5	28 60	31 8	5 50	9	250 S
MK III-A 90 S - 132 M	305	430	302	58	110	260	254	286	61	127	38 80	41 10	5 70	8	300 S
MK III-B 90 S - 132 M	305	430	302	58	110	260	254	286	91	172	42 110	45 12	10 90	8	Ø250
MK IV 112 M - 200 L	478	530	402	75	130	315	315	355	116	254	65 140	69 18	15 110	8	Ø350
MK V 200 L - 250 M	664	690	572	105	382	369	465	515	119	247	65 140	69 18	15 110	12	Ø450

Motor Platform Montajı

Müşteri motor platformunu kullanarak farklı makina ve sistem tasarlarken çok fazla yapıcı olanaklar elde edilebilir.

Motor platform tasarımı PGR monoblok dişli ünitesi serileri için tüm montaj pozisyonlarında kullanılabilir. 5 çeşit motor platformu tüm motor-redüktör montaj kombinasyonlarını kapsar. Çok kademeli redüktör tasarımları için de yine seçim tablolarından motor platformu seçimi yapılabilir.

PGR motor platformu kullanımının müşteriye sağladığı avantajlar;

* Hafif ve değişken titreşimleri etkileyen yapı
* Korozyona dayanıklı sabitleme elemanları
* Tüm montaj pozisyonlarında kullanılabilirlik
* Optimum kayış gerginliğini yakalamak adına ayarlanabilir yükseklik ayarı
* Birçok motor ve gövde büyüklüğü için motor platformu üzerinde bulundurduğu bağlantı delikleri
* 90° her yöne döndürülebilir yapı
* Seçim tablolarından tahvil oranının İ=1'e eşit olduğu durumlar için önerilir.

Assembling of Motor Platform

By using motor platform, you may have a lot of facility for designing different machines and systems.

Motor platform design may be used at all mounting positions for monoblock gear units. 5 types of motor platform covers all motor-reducer mounting combinations. For multi stage gear units, you can also select motor platform from selection tables.

The advantages of using motor platform to customer

* Structure that affects light and variable vibrations
* Fixing elements resistive for corrosion.
* Usability at all mounting positions
* Adjustable height adjustment to achieve optimum belt tension
* Connection holes over motor platform for a lot of motor and motor case dimension
* 90° rotation all direction
* It is recommended for situations where the ratio is equal to İ=1 from the selection tables

MOTORKONSOLE MONTAGE

Durch den Einsatz der Motorkonsole stehen dem Planer weitere konstruktive Möglichkeiten bei der Auslegung von Maschinen und Anlagen zur Verfügung. Die Motorkonsole ist so ausgelegt, dass sie in Verbindung mit allen PGR-Blokgehäusegetrieben in allen Bauformen kombiniert werden kann. Fünf Baugrößen decken alle Motor-Getriebe-kombinationen ab. Die jeweils möglichen Zuordnungen entnehmen Sie den Auswahltabellen, die auch für die entsprechenden mehrstufigen Getriebeausführung Gültigkeit haben.

- Vorteile der PGR-Motorkonsole für den Anwender;

* Leichte und variable Vibrationen dämpfende Konstruktion
* Korrisionssichere Befestigungselemente
* İn allen Einbaupositionen einsetzbar
* Leicht zu handhabende Höhenverstellung für optimale Riemenspannung
* Motorkonsole mit Bohrungen für mehrere Motorbaugrößen
* İn alle Richtungen um 90° schwenkbar
* Empfohlen für Situationen, in denen gemäß Auswahltabelle Übersetzungen i=1,0 sind

TR MOTOR PLATFORMU

EN MOTOR PLATFORM INSTALLATION

DE MOTORKONSOLEN

Tip Type	PKD 1390 PKD G 1390 PKD 2390	PKD 3390	PKD 4390 PKD 5390	PKD 6390 PKD 7390	PKD 8390	PKD G 8390	PKD 9390 PKD G9390
Motor	W III	W II	W III	W III W IV	W V W IV	W V W IV	W IV
63 M	MK I						
71 M	MK I						
80 M	MK I	MK II					
90 S **90 L**	MK I	MK II	MK III - A	MK III - B			
100 L	MK I	MK II	MK III - A	MK III - B			
112 M		MK II	MK III - A	MK III - B	MK IV	MK IV	
132 S **132 M**			MK III - A	MK III - B	MK IV	MK IV	
160 M **160 L**				MK IV	MK IV	MK IV	
180 M **180 L**				MK IV	MK IV	MK IV **	
200 L				MK IV	MK IV	MK IV **	MK V
225 S **225 M**					MK V	MK V	MK V
250 M					MK V	MK V	MK V
280 M							MK V

** Ayarlanabilir mesafe (sınırlı)

Motor platformu seçim örneği:

Öncelikle gerekli çıkış hız veya gerekli çıkış gücü ihtiyacına bağlı olarak kullanacağımız temel redüktör tipini belirlemeliyiz. Motorlu seçim tablolarında motor çıkış gücü ve tahvil oranına göre redüktör seçimi yapınız.

0,18 kW 5,8 d/dk, i=232.89 → PKD 2390 100L

Redüktör tipinin seçilmesinin ardından motor gövde büyüklüğü ve redüktör tipine bağlı tabloyu kullanarak motor platformu tipini (MK) tespit ediniz (Sayfa 76).

100L → PKD 2390 → MK1

MK1 tipi platforma göre motor gövde büyüklüğü satırını göz önüne alarak kayış tipi, ayar aralığı, kayış uzunluğu, 2 mil arası eksen mesafesi ve kayış sayısı bilgileri elde edilebilir. (Sayfa 78)

** There is a limit distance for adjustment.

Example of motor platform selection:

First of all, we must determine the basic gearbox type we will use depending on the required output speed or the required output power requirement.In the motor selection tables, select the reducer according to the motor output power and bond ratio.

0.18 kW 5.8 min^{-1}, i=232.89 → PKD 2390 100L

After selecting the gearbox type, determine the motor platform type (MK) using the table depending on the motor body size and gearbox type (Page 76).

100L → PKD 2390 → MK1

Belt type, adjustment range, belt length, axis distance between 2 shafts and number of belts can be obtained by considering the motor body size line according to the Mk1 type platform. (Page 78)

Motorkonsole mit Bohrungen für mehrere Motorbaugrößen

Beispiel für die Auswahl der Motorkonsole:

Zunächst ist je nach geforderter Abtriebsdrehzahl bzw. geforderter Abtriebsleistung der zu verwendende Getriebetyp zu bestimmen. Wählen Sie in den Auswahltabellen für Motoren das Getriebe entsprechend der Abtriebsleistung und dem Übersetzungsverhältnis.

0,18 kW 5,8 min^{-1}, i=232,89 → PKD 2390 100L

Nach Auswahl des Getriebetyps ermitteln Sie den Motorkonsolentyp (MK) anhand der Tabelle in Abhängigkeit von Motorbaugröße und Getriebetyp (Seite 76).

100L → PKD 2390 → Mk1

Informationen zu Riementyp, Verstellbereich, Riemenlänge, Achsabstand zwischen 2 Wellen und Anzahl der Riemen können unter Berücksichtigung der Zeile für die Motorkörpergröße gemäß dem MK1- Motorkonsolentyp ermittelt werden. (Seite 78)

PGR DRIVE TECHNOLOGIES

TR V KAYIŞ VE KAYIŞ KASNAK SEÇİMİ

EN V BELT AND BELT PULLEY SELECTION

DE AUSWAHL VON V RIEMEN UND RIEMENSCHEIBE

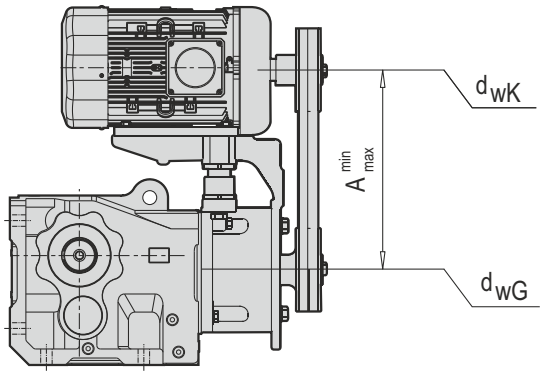

	Motor	Çıkış Output Abtrieb (kW)	Ayar aralığı Adjustment range Einstellbereich Amin	Amax	Kayış uzunluğu Belt length Riemenlänge	Mil merkezi uzaklığı Shaft centre distance Wellenmittenabstand A	Kayış sayısı Number of belts Anzahl Riemen
MK I Kayış Tipi SPZ Belt type SPZ Riementyp SPZ					(dwg = 80) (i = 1) Lw		
	63 M/4A	0.12	216	236	697	223	1
	63 M/4B	0.18	216	236	697	223	1
	71 M/4A	0.25	224	244	710	229	1
	71 M/4B	0.37	224	244	710	229	1
	80 M/4A	0.55	233	253	737	243	1
	80 M/4B	0.75	233	253	737	243	1
	90 S/4A	1.10	243	263	750	249	1
	90 L/4A	1.50	243	263	750	249	2
	100 L/4A	2.20	253	273	772	260	2
	100 L/4B	3.00	253	273	772	260	3
MK II Kayış Tipi XPZ Belt type XPZ Riementyp SPZ					(dwg = 112) (i = 1) Lw		
	80 M/4A	0.55	279	304	930	289	1
	80 M/4B	0.75	279	304	930	289	1
	90 S/4A	1.10	289	314	950	299	1
	90 L/4A	1.50	289	314	950	299	1
	100 L/4A	2.20	299	324	980	314	1
	100 L/4B	3.00	299	324	980	314	2
	112 M/4B	4.00	311	336	1000	324	2
MK III Kayış Tipi SPZ Belt type SPZ Riementyp SPZ					(dwg = 160) (i = 1) Lw		
	90 S/4A	1.10	344	376	1222	360	1
	90 L/4B	1.50	344	376	1222	360	1
	100 L/4A	2.20	354	386	1250	374	1
	100 L/4B	3.00	354	386	1250	374	1
	112 M/4B	4.00	366	398	1262	380	2
	132 S/4C	5.50	386	418	1312	405	2
	132 M/4B	7.50	386	418	1312	405	3
	132 M/4	9.20	386	418	1312	405	3
MK IV Kayış Tipi XPA Belt type XPA Riementyp SPA					(dwg = 200) (i = 1) Lw		
	112 M/4B	4.00	427	467	1500	436	1
	132 S/4C	5.50	447	487	1550	461	1
	132 M/4B	7.50	447	487	1550	461	2
	132 M/4	9.20	447	487	1550	461	2
	160 M/4B	11.0	475	515	1600	486	2
	160 L/4A	15.0	475	515	1600	486	3
	180 M/4B	18.5	495	535	1650	511	3
	180 L/4B	22.0	495	535	1650	511	4
	200 L/4C	30.0	515	555	1700	536	4
MK V Kayış Tipi SPA Belt type SPA Riementyp SPA					(dwg = 250) (i = 1) Lw		
	200 L/4C	30.0	665	715	2182	698	4
	225 S/4A	37.0	690	740	2207	710	4
	225 M/4C	45.0	690	740	2207	710	5
MK V Kayış Tipi SPB Belt type SPB Riementyp SPB					(dwg = 250) (i = 1) Lw		
	250 M/4C	55.0	715	765	2240	727	4

* Kayış kasnak aksesuarları PGR tarafından temin edilmemektedir.

*Belt pulley accessories are not provided by PGR.

*Riemenscheibenzubehör wird nicht von PGR geliefert.

Motorlu Seçim Tabloları

Selection Tables of Geared motors

Auswahltabellen der Getriebemotoren

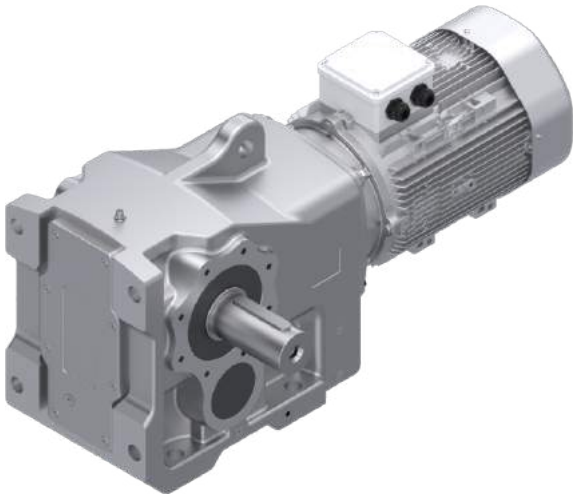

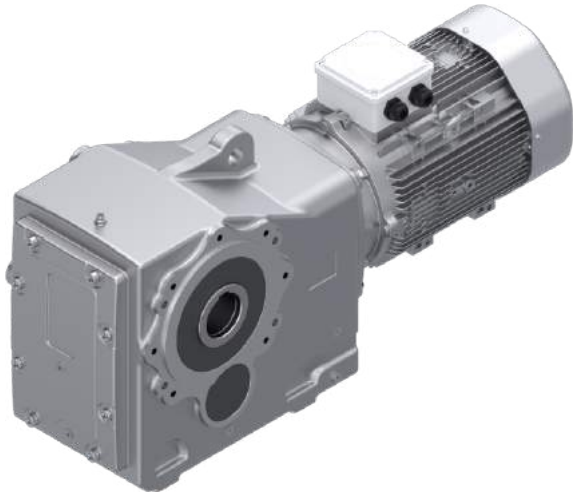

PKD...

TR TEKNİK AÇIKLAMALAR | EN TECHNICAL DESCRIPTIONS | DE TECHNISCHE BESCHREIBUNGEN

0.25 kW → **Redüktör motor gücü**
Gear unit motor power
Getriebemotorleistung

Motor gücü
Rated motor power
Motornennleistung

Çıkış devri
Output speed
Leistungsgeschwindigkeit

Çıkış momenti
Output torque
Abtriebsdrehmoment

Servis faktörü
Service factor
Betriebsfaktor

Tahvil oranı
Reduction ratio
Übersetzungsverhältnis

Redüktör tipi
Gear unit motor type
Getriebetyp

Ağırlık
Weight
Gewicht

Ölçü sayfaları
Drawing pages
Zeichnungsseite

P_1 [kW]	n_2 [Min^{-1}]	M_2 [Nm]	f_B	i_{ges}	F_R [N]	F_A [N]	$F_{R\,GR}$ [N]	$F_{A\,GR}$ [N]	Tip / Type / Typ IE2 / IE3	Kg	mm
0.25	0.6	3788	0.8	1516.84	23.0	40.0	28.0	40.0	PKD 4490 71M6C / 71M6D	128	242-243
	0.8	2781	1.1	1113.75	25.0	40.0	28.0	40.0			
	1.0	2203	1.3	882.35	27.0	40.0	28.0	40.0			
	1.4	1610	1.8	644.73	27.0	40.0	28.0	40.0			
	1.6	1418	2.1	567.85	27.0	40.0	28.0	40.0			

Müsaade edilebilir radyal yükler
Normal rulmanlarda
F_R için listelenmiş değerlerde
F_A = 0 (N) olarak hesaplanmıştır

Permissible radial force or load on output shaft while normal bearings are used. For this load F_A is assumed equal zero. F_A = 0 (N)

Die aufgeführten Werte für zulässige Radiallasten FR für Normallager werden mit FA = 0 (N) berechnet.

Müsaade edilebilir eksenel yükler
Normal rulmanlarda
F_A için listelenmiş değerlerde
F_R = 0 (N) olarak hesaplanmıştır

Permissible axial force or load on output shaft while normal bearings are used. For this load F_R is assumed equal zero. F_R = 0 (N)

Die aufgeführten Werte für zulässige Axiallasten FA für Normallager werden mit FR = 0 (N) berechnet.

Müsaade edilebilir eksenel yükler
Güçlendirilmiş rulmanlarda
(Sadece ayak montajlı, helisel konik dişlili redüktörlerde PKD 7390' a kadar)
F_A için listelenmiş değerlerde
F_R = 0 (N) olarak hesaplanmıştır

Permissible axial force on output shaft while reinforced bearings are used (exist for PKD 7390 and lesser gear case). For this load F_R is assumed equal to zero. F_R = 0 (N)

Die aufgeführten Werte für zulässige Axiallasten FA für verstärkte Lager werden mit FR = 0 (N) berechnet.

Müsaade edilebilir radyal yükler
Güçlendirilmiş rulmanlarda
(Sadece ayak montajlı, helisel konik dişlili redüktörlerde PKD 7390' a kadar)
F_R için listelenmiş değerlerde
F_A = 0 (N) olarak hesaplanmıştır

Permissible radial force or load on output shaft while reinforced bearings are used (exist for PKD 7390 and lesser gear case). For this load F_A is assumed equal to zero. F_A = 0 (N)

Die aufgeführten Werte für zulässige Radiallasten FR für verstärkte Lager werden mit FA = 0 (N) berechnet

P_1 [kW]	n_2 [Min^{-1}]	M_2 [Nm]	f_B	i_{ges}	F_R [N]	F_A [N]	$F_{R\,GR}$ [N]	$F_{A\,GR}$ [N]	Tip / Type / Typ IE2 / IE3	Kg	mm
0.12	0.7	1634	1.0	1363.01	11.0	15.0	15.0	30.0	PKD 3490 63M6C / 63M6B	71	234-235
	0.8	1380	1.2	1151.03	13.0	15.0	15.0	30.0			
	1.0	1047	1.6	873.20	14.0	15.0	15.0	30.0			
	1.3	829	2.0	691.75	14.0	15.0	15.0	30.0			
	1.7	646	2.5	538.92	14.0	15.0	15.0	30.0			
	0.6	1829	0.8	2429.08	-	-	-	-	PKD 3490 63M4A	71	234-235
	0.8	1374	1.1	1825.06	-	-	-	-			
	1.0	1026	1.5	1363.01	11.0	15.0	15.0	30.0			
	1.2	867	1.8	1151.03	13.0	15.0	15.0	30.0			
	1.6	658	2.4	873.20	14.0	15.0	15.0	30.0			
	2.0	521	3.0	691.75	14.0	15.0	15.0	30.0			
	0.8	1291	0.9	3637.83	11.0	15.0	-	-	PKD 3490 63M2K	71	234-235
	1.2	862	1.4	2429.08	11.0	15.0	-	-			
	1.5	648	1.8	1825.06	11.0	15.0	-	-			
	2.1	484	2.4	1363.01	11.0	15.0	15.0	30.0			
	2.4	409	2.9	1151.03	13.0	15.0	15.0	30.0			
	0.9	1142	0.8	952.47	3.0	12.0	10.0	25.0	PKD 2490 63M6C / 63M6B	48	226-227
	1.2	904	1.0	754.58	6.0	12.0	11.0	25.0			
	1.3	813	1.1	678.31	7.0	12.0	11.0	25.0			
	1.6	674	1.3	562.44	8.0	12.0	12.0	25.0			
	1.9	567	1.6	473.11	8.0	12.0	12.0	25.0			
	2.6	407	2.2	339.72	8.0	12.0	12.0	25.0			
	3.0	357	2.5	297.67	9.0	12.0	12.0	25.0			
	3.9	274	2.5	228.98	8.0	12.0	12.0	22.0			
	0.9	1133	0.8	1504.07	-	-	-	-	PKD 2490 63M4A	48	226-227
	1.2	844	1.0	1121.09	3.0	12.0	8.0	25.0			
	1.5	717	1.2	952.47	3.0	12.0	10.0	25.0			
	1.9	568	1.5	754.58	6.0	12.0	11.0	25.0			
	2.1	511	1.7	678.31	7.0	12.0	11.0	25.0			
	2.5	424	2.0	562.44	8.0	12.0	12.0	25.0			
	3.0	356	2.4	473.11	8.0	12.0	12.0	25.0			
	1.5	674	1.0	1898.52	3.0	12.0	-	-	PKD 2490 63M2K	48	226-227
	1.9	534	1.2	1504.07	3.0	12.0	-	-			
	2.5	398	1.6	1121.09	3.0	12.0	8.0	25.0			
	2.9	338	1.9	952.47	3.0	12.0	10.0	25.0			
	3.7	268	2.4	754.58	6.0	12.0	11.0	25.0			
	4.1	241	2.7	678.31	7.0	12.0	11.0	25.0			
	3.3	337	2.5	276.87	12.0	12.0	-	-	PKD 2390 63M6C / 63M6B	43	222-223
	3.9	283	2.6	232.89	12.0	12.0	12.0	23.0			
	1.4	755	0.8	630.06	8.0	20.0	9.0	20.0	PKD G 1490 63M6C / 63M6B	41	218-219
	1.6	669	1.0	558.17	8.0	20.0	9.0	20.0			
	1.8	591	1.1	493.33	9.0	20.0	9.0	20.0			
	2.4	441	1.5	367.72	9.0	20.0	9.0	20.0			
	3.4	321	2.0	267.91	9.0	20.0	-	-			
	3.8	283	2.3	235.95	9.0	20.0	-	-			
	5.1	214	2.8	178.17	9.0	20.0	-	-			
	6.7	161	2.8	134.41	9.0	20.0	-	-			
	2.2	474	1.3	630.06	8.0	20.0	20.0	20.0	PKD G 1490 63M4A	41	218-219
	2.5	420	1.5	558.17	8.0	20.0	20.0	20.0			
	2.8	372	1.6	493.33	9.0	20.0	20.0	20.0			
	3.8	277	2.2	367.72	9.0	20.0	20.0	20.0			
	5.2	202	3.0	267.91	-	-	-	-			
	2.0	501	0.9	1412.66	8.0	20.0	9.0	20.0	PKD G 1490 63M2K	41	218-219
	2.2	446	1.0	1255.89	8.0	20.0	9.0	20.0			
	4.4	224	2.1	630.06	8.0	20.0	9.0	20.0			
	5.0	198	2.3	558.17	8.0	20.0	9.0	20.0			
	5.7	175	2.6	493.33	9.0	20.0	9.0	20.0			
	3.2	338	1.8	277.79	9.0	20.0	9.0	20.0	PKD G 1390 63M6C / 63M6B	36	214-215
	3.8	285	2.2	234.59	9.0	20.0	9.0	20.0			
	4.4	251	2.6	206.01	9.0	20.0	9.0	20.0			
	5.0	214	2.8	277.79	9.0	20.0	9.0	20.0	PKD G 1390 63M4A	36	214-215

PGR DRIVE TECHNOLOGIES

P_1 [kW]	n_2 [Min^{-1}]	M_2 [Nm]	f_B	i_{ges}	F_R [N]	F_A [N]	$F_{R\,GR}$ [N]	$F_{A\,GR}$ [N]	Tip / Type / Typ IE2 / IE3	Kg	mm
0.12	2.0	528	0.8	440.14	5.0	20.0	9.0	20.0	PKD 1490 63M6C / 63M6B	40	210-211
	2.8	384	1.1	320.68	5.0	20.0	-	-			
	3.2	339	1.2	282.43	5.0	20.0	-	-			
	4.2	256	1.6	213.26	5.0	20.0	-	-			
	5.1	214	2.0	178.17	5.0	20.0	-	-			
	6.4	170	2.5	141.69	5.0	20.0	-	-			
	2.1	503	0.8	668.11	3.0	20.0	8.0	20.0	PKD 1490 63M4A	40	210-211
	2.4	445	0.9	590.51	3.0	20.0	8.0	20.0			
	3.2	331	1.2	440.14	5.0	20.0	9.0	20.0			
	4.4	241	1.7	320.68	-	-	-	-			
	5.0	213	1.9	282.43	-	-	-	-			
	6.6	161	2.5	213.26	-	-	-	-			
	7.9	134	3.0	178.17	-	-	-	-			
	3.3	301	1.0	848.31	3.0	20.0	8.0	20.0	PKD 1490 63M2K	40	210-211
	4.2	237	1.3	668.11	3.0	20.0	8.0	20.0			
	4.7	210	1.5	590.51	3.0	20.0	8.0	20.0			
	6.4	156	1.9	440.14	5.0	20.0	9.0	20.0			
	8.7	114	2.7	320.68	5.0	20.0	-	-			
	9.9	100	3.0	282.43	5.0	20.0	-	-			
	2.7	405	1.0	332.51	6.0	20.0	8.0	20.0	PKD 1390 63M6C / 63M6B	35	206-207
	3.2	342	1.2	280.80	7.0	20.0	9.0	20.0			
	3.6	300	1.4	246.59	7.0	20.0	9.0	20.0			
	4.4	251	1.7	206.01	7.0	20.0	9.0	20.0			
	5.4	203	2.1	166.82	7.0	20.0	9.0	20.0			
	6.4	171	2.5	140.87	7.0	20.0	9.0	20.0			
	7.3	151	2.8	123.71	7.0	20.0	9.0	20.0			
	4.2	256	1.6	332.51	6.0	20.0	9.0	20.0	PKD 1390 63M4A	35	206-207
	5.0	216	1.9	280.80	7.0	20.0	9.0	20.0			
	8.4	122	2.5	332.51	6.0	20.0	9.0	20.0	PKD 1390 63M2K	35	206-207
	10.0	103	2.9	280.80	7.0	20.0	9.0	20.0			
	14.3	78	1.7	62.77	4.7	9.0	-	-	PKD C 1290 63M6C / 63M6B	23	194-195
	16.4	68	1.7	54.92	4.7	9.0	-	-			
	18.1	61	2.9	49.69	4.7	9.0	-	-			
	20.7	54	2.9	43.48	4.7	9.0	-	-			
	22.3	49	2.5	62.77	4.7	9.0	-	-	PKD C 1290 63M4A	23	194-195
	25.5	43	2.5	54.92	4.7	9.0	-	-			
	16.8	66	1.4	53.52	3.3	5.6	-	-	PKD B 0290 63M6C / 63M6B	16	190-191
	19.2	58	1.4	46.83	3.3	5.6	-	-			
	21.8	51	2.4	41.23	3.3	5.6	-	-			
	24.9	45	2.4	36.08	3.3	5.6	-	-			
	19.4	57	1.0	72.24	3.2	5.6	-	-	PKD B 0290 63M4A	16	190-191
	22.1	50	1.0	63.21	3.2	5.6	-	-			
	26.2	42	2.1	53.52	3.3	5.6	-	-			
	29.9	37	2.0	46.83	3.3	5.6	-	-			
	38.8	28	1.5	72.24	3.2	5.6	-	-	PKD B 0290 63M2K	16	190-191
	44.3	24	1.6	63.21	3.2	5.6	-	-			
	16.5	67	0.8	54.62	3.2	5.1	-	-	PKD A 0290 63M6C / 63M6B	12	186-187
	18.8	59	0.8	47.79	3.2	5.1	-	-			
	22.7	49	1.7	39.64	3.2	5.1	-	-			
	25.9	43	1.8	34.69	3.2	5.1	-	-			
	29.9	37	2.0	30.13	3.2	5.1	-	-			
	34.1	33	2.9	26.36	3.2	5.1	-	-			
	51.2	22	2.9	17.58	3.2	5.1	-	-			
	25.6	43	1.2	54.62	3.2	5.1	-	-	PKD A 0290 63M4A	12	186-187
	29.3	38	1.2	47.79	3.2	5.1	-	-			
	35.3	31	2.6	39.64	3.2	5.1	-	-			
	40.4	27	2.8	34.69	3.2	5.1	-	-			
	46.5	24	3.0	30.13	3.2	5.1	-	-			
	51.3	21	1.8	54.62	3.2	5.1	-	-	PKD A 0290 63M2K	12	186-187
	58.6	18	1.9	47.79	3.2	5.1	-	-			

P_1 [kW]	n_2 [Min^{-1}]	M_2 [Nm]	f_B	i_{ges}	F_R [N]	F_A [N]	$F_{R\,GR}$ [N]	$F_{A\,GR}$ [N]	Tip / Type / Typ IE2 / IE3	Kg	mm
0.18	0.5	3381	2.6	1909.17	64.0	50.0	-	-	PKD 7390/32 71M6B / 71M6A	362	278
	0.5	3242	2.7	1830.71	64.0	50.0	-	-	PKD 6390/32 71M6B / 71M6A	362	278
	0.2 0.5 0.6 0.8 1.0	6717 3370 2517 1909 1674	0.8 1.5 2.0 2.6 3.0	3736.07 1874.35 1399.82 1061.93 931.06	36.0 36.0 36.0 36.0 36.0	45.0 45.0 45.0 45.0 45.0	- - 38.0 38.0 38.0	- - 45.0 45.0 45.0	PKD 5490 71M6B / 71M6A	206	250-251
	0.4 0.6 0.8 1.0 1.4 1.6	3827 2727 2002 1586 1159 1021	0.8 1.1 1.5 1.9 2.5 2.9	2128.80 1516.84 1113.75 882.35 644.73 567.85	27.0 27.0 27.0 27.0 27.0 27.0	40.0 40.0 40.0 40.0 40.0 40.0	- 28.0 28.0 28.0 28.0 28.0	- 40.0 40.0 40.0 40.0 40.0	PKD 4490 71M6B / 71M6A	128	242-243
	0.8 1.0 1.3 1.7 2.3 2.5	2069 1570 1244 969 718 635	0.8 1.0 1.3 1.7 2.3 2.6	1151.03 873.20 691.75 538.92 399.39 353.00	9.0 12.0 13.0 14.0 11.0 115.0	15.0 15.0 15.0 15.0 15.0 15.0	15.0 15.0 15.0 15.0 15.0 15.0	30.0 30.0 30.0 29.0 27.0 27.0	PKD 3490 71M6B / 71M6A	74	234-235
	0.8 1.0 1.2 1.6 2.0 2.6	2062 1540 1300 986 781 609	0.8 1.0 1.2 1.6 2.0 2.5	1825.06 1363.01 1151.03 873.20 691.75 538.92	- 3.0 9.0 12.0 13.0 14.0	- 15.0 15.0 15.0 15.0 15.0	- 15.0 15.0 15.0 15.0 15.0	- 30.0 30.0 30.0 30.0 29.0	PKD 3490 63M4B	71	234-235
	1.2 1.5 2.1 2.4 3.2	1293 972 726 613 465	0.9 1.2 1.6 1.9 2.5	2429.08 1825.06 1363.01 1151.03 873.20	3.0 3.0 3.0 9.0 12.0	15.0 15.0 15.0 15.0 15.0	- - 15.0 15.0 15.0	- - 30.0 30.0 30.0	PKD 3490 63M2A	71	234-235
	3.0	540	3.0	296.10	14.0	15.0	15.0	23.0	PKD 3390 71M6B / 71M6A	66	230-231
	1.6 1.9 2.6 3.0 3.9	1011 851 611 535 412	0.9 1.1 1.5 1.7 1.7	562.44 473.11 339.72 297.67 228.98	5.0 7.0 8.0 9.0 8.0	12.0 12.0 12.0 12.0 12.0	10.0 11.0 12.0 12.0 12.0	25.0 25.0 25.0 25.0 22.0	PKD 2490 71M6B / 71M6A	51	226-227
	1.5 1.9 2.1 2.5 3.0 4.1 4.7 6.1	1076 852 766 635 534 384 336 259	0.8 1.0 1.1 1.4 1.6 2.2 2.6 2.5	952.47 754.58 678.31 562.44 473.11 339.72 297.67 228.98	3.0 0.4 1.0 5.0 7.0 8.0 9.0 8.0	12.0 12.0 12.0 12.0 12.0 12.0 12.0 12.0	- 8.0 9.0 10.0 11.0 12.0 12.0 12.0	- 25.0 25.0 25.0 25.0 25.0 25.0 22.0	PKD 2490 63M4B	48	226-227
	1.9 2.5 2.9 3.7 4.1 5.0 5.9	801 597 507 402 361 299 252	0.8 1.1 1.3 1.6 1.8 2.2 2.6	1504.07 1121.09 952.47 754.58 678.31 562.44 473.11	3.0 3.0 3.0 4.0 1.0 5.0 7.0	12.0 12.0 12.0 12.0 12.0 12.0 12.0	- 8.0 10.0 8.0 9.0 10.0 11.0	- 25.0 25.0 25.0 25.0 25.0 25.0	PKD 2490 63M2A	48	226-227
	3.3 3.9 4.1 4.9 5.3	505 425 400 337 310	1.7 1.7 2.3 2.7 2.9	276.87 232.89 219.34 184.51 169.88	5.0 12.0 12.0 12.0 12.0	12.0 12.0 12.0 12.0 12.0	10.0 12.0 11.0 12.0 -	22.0 23.0 21.0 20.0 -	PKD 2390 71M6B / 71M6A	46	222-223
	5.1 6.0	320 269	2.5 2.6	276.87 232.89	5.0 12.0	12.0 12.0	10.0 12.0	22.0 23.0	PKD 2390 63M4B	43	222-223

P_1 [kW]	n_2 [Min^{-1}]	M_2 [Nm]	f_B	i_{ges}	F_R [N]	F_A [N]	$F_{R\,GR}$ [N]	$F_{A\,GR}$ [N]	Tip / Type / Typ IE2 / IE3	Kg	mm
0.18	2.4	661	1.0	367.72	8.0	20.0	9.0	20.0	PKD G 1490 71M6B / 71M6A	44	218-219
	3.4	482	1.3	267.91	8.0	20.0	-	-			
	3.8	424	1.5	235.95	8.0	20.0	-	-			
	5.1	320	1.9	178.17	8.0	20.0	-	-			
	6.7	242	1.9	134.41	8.0	20.0	-	-			
	2.2	712	0.9	630.06	8.0	20.0	9.0	20.0	PKD G 1490 63M4B	41	218-219
	2.5	631	1.0	558.17	6.0	20.0	9.0	20.0			
	2.8	557	1.1	493.33	7.0	20.0	9.0	20.0			
	3.8	415	1.5	367.72	8.0	20.0	9.0	20.0			
	5.2	303	2.0	267.91	-	-	-	-			
	5.9	267	2.3	235.95	-	-	-	-			
	7.9	201	2.8	178.17	-	-	-	-			
	10.4	152	2.8	134.41	-	-	-	-			
	4.4	335	1.4	630.06	8.0	20.0	9.0	20.0	PKD G 1490 63M2A	41	218-219
	5.0	297	1.6	558.17	6.0	20.0	9.0	20.0			
	5.7	263	1.8	493.33	7.0	20.0	9.0	20.0			
	7.6	196	2.4	367.72	8.0	20.0	9.0	20.0			
	3.2	507	1.2	277.79	9.0	20.0	9.0	20.0	PKD G 1390 71M6B / 71M6A	39	214-215
	3.8	428	1.4	234.59	9.0	20.0	9.0	20.0			
	4.4	376	1.7	206.01	9.0	20.0	9.0	20.0			
	4.9	334	1.9	183.15	9.0	20.0	9.0	20.0			
	6.0	274	2.3	149.85	9.0	20.0	9.0	20.0			
	6.3	260	2.5	142.45	9.0	20.0	9.0	20.0			
	7.7	213	3.0	116.55	9.0	20.0	-	-			
	5.0	321	1.8	277.79	9.0	20.0	9.0	20.0	PKD G 1390 63M4B	36	214-215
	6.0	271	2.2	234.59	9.0	20.0	9.0	20.0			
	6.8	238	2.6	206.01	9.0	20.0	9.0	20.0			
	10.1	153	2.9	277.79	9.0	20.0	9.0	20.0	PKD G 1390 63M2A	36	214-215
	3.2	508	0.8	282.43	3.0	20.0	-	-	PKD 1490 71M6B / 71M6A	43	210-211
	4.2	383	1.1	213.26	3.0	20.0	-	-			
	5.1	320	1.3	178.17	3.0	20.0	-	-			
	6.4	255	1.6	141.69	3.0	20.0	-	-			
	3.2	497	0.8	440.14	5.0	20.0	9.0	20.0	PKD 1490 63M4B	40	210-211
	4.4	362	1.1	320.68	-	-	-	-			
	5.0	319	1.3	282.43	-	-	-	-			
	6.6	241	1.7	213.26	-	-	-	-			
	7.9	201	2.0	178.17	-	-	-	-			
	9.9	160	2.5	141.69	-	-	-	-			
	4.2	356	0.9	668.11	5.0	20.0	8.0	20.0	PKD 1490 63M2A	40	210-211
	4.7	314	1.0	590.51	5.0	20.0	8.0	20.0			
	6.4	234	1.3	440.14	5.0	20.0	9.0	20.0			
	8.7	171	1.8	320.68	3.0	20.0	-	-			
	9.9	150	2.0	282.43	3.0	20.0	-	-			
	13.1	114	2.7	213.26	3.0	20.0	-	-			
	3.2	513	0.8	280.80	6.0	20.0	7.0	20.0	PKD 1390 71M6B / 71M6A	38	206-207
	3.6	450	0.9	246.59	6.0	20.0	8.0	20.0			
	4.4	376	1.1	206.01	6.0	20.0	7.0	20.0			
	4.9	334	1.3	183.15	6.0	20.0	8.0	20.0			
	5.4	305	1.4	166.82	6.0	20.0	9.0	20.0			
	6.4	257	1.6	140.87	6.0	20.0	9.0	20.0			
	7.3	226	1.9	123.71	6.0	20.0	9.0	20.0			
	8.2	201	2.1	109.98	6.0	20.0	9.0	20.0			
	9.2	178	2.4	97.43	6.0	20.0	9.0	20.0			
	10.5	157	2.7	86.12	6.0	20.0	9.0	20.0			
	11.7	140	3.0	76.68	6.0	20.0	9.0	20.0			
	4.2	384	1.0	332.51	5.0	20.0	8.0	20.0	PKD 1390 63M4B	35	206-207
	5.0	324	1.2	280.80	6.0	20.0	9.0	20.0			
	5.7	285	1.4	246.59	6.0	20.0	9.0	20.0			
	6.8	238	1.7	206.01	6.0	20.0	9.0	20.0			
	8.4	183	1.7	332.51	5.0	20.0	8.0	20.0	PKD 1390 63M2A	35	206-207
	10.0	155	2.0	280.80	6.0	20.0	9.0	20.0			
	11.4	136	2.2	246.59	6.0	20.0	9.0	20.0			
	13.6	114	2.7	206.01	6.0	20.0	9.0	20.0			

P_1 [kW]	n_2 [Min^{-1}]	M_2 [Nm]	f_B	i_{ges}	F_R [N]	F_A [N]	$F_{R\,GR}$ [N]	$F_{A\,GR}$ [N]	Tip / Type / Typ IE2 / IE3	Kg	mm
0.18	14.3	116	1.1	62.77	4.6	9.0	-	-	PKD C 1290 71M6B / 71M6A	26	194-195
	16.4	102	1.1	54.92	4.6	9.0	-	-			
	18.1	92	1.9	49.69	4.6	9.0	-	-			
	20.7	81	2.0	43.48	4.7	9.0	-	-			
	23.3	72	2.8	38.59	4.7	9.0	-	-			
	22.3	74	1.7	62.77	4.6	9.0	-	-	PKD C 1290 63M4B	23	194-195
	25.5	65	1.7	54.92	4.6	9.0	-	-			
	28.2	59	2.9	49.69	4.6	9.0	-	-			
	32.2	51	2.9	43.48	4.7	9.0	-	-			
	44.6	36	2.6	62.77	4.6	9.0	-	-	PKD C 1290 63M2A	23	194-195
	51.0	31	2.7	54.92	4.6	9.0	-	-			
	16.8	99	1.0	53.52	3.1	5.6	-	-	PKD B 0290 71M6B / 71M6A	19	190-191
	19.2	87	0.9	46.83	3.2	5.6	-	-			
	21.8	76	1.6	41.23	3.3	5.6	-	-			
	24.9	67	1.6	36.08	3.3	5.6	-	-			
	27.9	60	2.1	32.24	3.2	5.6	-	-			
	31.9	52	2.4	28.21	3.2	5.6	-	-			
	47.8	35	2.6	18.81	3.2	5.6	-	-			
	26.2	63	1.4	53.52	3.1	5.6	-	-	PKD B 0290 63M4B	16	190-191
	29.9	55	1.4	46.83	3.2	5.6	-	-			
	34.0	49	2.4	41.23	3.3	5.6	-	-			
	38.8	43	2.4	36.08	3.3	5.6	-	-			
	38.8	41	1.0	72.24	3.1	5.6	-	-	PKD B 0290 63M2A	16	190-191
	44.3	36	1.1	63.21	3.1	5.6	-	-			
	52.3	31	2.2	53.52	3.1	5.6	-	-			
	59.8	27	2.1	46.83	3.2	5.6	-	-			
	22.7	73	1.1	39.64	3.1	5.1	-	-	PKD A 0290 71M6B / 71M6A	15	186-187
	25.9	64	1.2	34.69	3.2	5.1	-	-			
	29.9	56	1.3	30.13	3.2	5.1	-	-			
	34.1	49	1.9	26.36	3.2	5.1	-	-			
	38.7	43	2.2	23.26	3.3	5.1	-	-			
	44.2	38	2.5	20.35	3.3	5.1	-	-			
	51.2	33	1.9	17.58	3.3	5.1	-	-			
	25.6	64	0.8	54.62	3.2	5.1	-	-	PKD A 0290 63M4B	12	186-187
	29.3	56	0.8	47.79	3.2	5.1	-	-			
	35.3	47	1.7	39.64	3.1	5.1	-	-			
	40.4	41	1.8	34.69	3.2	5.1	-	-			
	46.5	36	2.0	30.13	3.2	5.1	-	-			
	53.1	31	2.9	26.36	3.2	5.1	-	-			
	79.6	21	2.9	17.58	3.3	5.1	-	-			
	51.3	31	1.2	54.62	3.2	5.1	-	-	PKD A 0290 63M2A	12	186-187
	58.6	27	1.3	47.79	3.2	5.1	-	-			
	70.6	23	2.7	39.64	3.1	5.1	-	-			
	80.7	20	2.9	34.69	3.2	5.1	-	-			
0.25	0.5	4696	1.9	1909.17	64.0	50.0	-	-	PKD 7390/32 71M6C / 71M6D	362	278
	0.6	3562	2.5	1448.34	64.0	50.0	66.0	50.0			
	0.7	2930	2.9	1909.17	-	-	-	-	PKD 7390/32 71M4A / 71M4B	362	278
	0.5	4503	1.9	1830.71	64.0	50.0	-	-	PKD 6390/32 71M6C / 71M6D	362	278
	0.6	3416	2.5	1388.82	64.0	50.0	66.0	50.0			
	0.8	2810	2.9	1830.71	-	-	-	-	PKD 6390/32 71M4A / 71M4B	362	278
	0.5	4681	1.1	1874.35	33.0	45.0	-	-	PKD 5490 71M6C / 71M6D	206	250-251
	0.6	3496	1.4	1399.82	33.0	45.0	38.0	45.0			
	0.8	2652	1.9	1061.93	36.0	45.0	38.0	45.0			
	1.0	2325	2.2	931.06	36.0	45.0	38.0	45.0			
	1.3	1757	2.9	703.71	36.0	45.0	38.0	45.0			
	0.4	5862	0.8	3736.07	-	-	-	-	PKD 5490 71M4A / 71M4B	206	250-251
	0.7	2941	1.6	1874.35	-	-	-	-			
	1.0	2196	2.2	1399.82	33.0	45.0	38.0	45.0			
	1.3	1666	2.9	1061.93	36.0	45.0	38.0	45.0			

P_1 [kW]	n_2 [Min^{-1}]	M_2 [Nm]	f_B	i_{ges}	F_R [N]	F_A [N]	$F_{R\,GR}$ [N]	$F_{A\,GR}$ [N]	Tip / Type / Typ IE2 / IE3	Kg	mm
0.25	0.6	3788	0.8	1516.84	23.0	40.0	28.0	40.0	PKD 4490 71M6C / 71M6D	128	242-243
	0.8	2781	1.1	1113.75	25.0	40.0	28.0	40.0			
	1.0	2203	1.3	882.35	27.0	40.0	28.0	40.0			
	1.4	1610	1.8	644.73	27.0	40.0	28.0	40.0			
	1.6	1418	2.1	567.85	27.0	40.0	28.0	40.0			
	0.7	3340	0.8	2128.80	-	-	-	-	PKD 4490 71M4A / 71M4B	128	242-243
	0.9	2380	1.2	1516.84	23.0	40.0	28.0	40.0			
	1.3	1747	1.6	1113.75	25.0	40.0	28.0	40.0			
	1.6	1384	2.0	882.35	27.0	40.0	28.0	40.0			
	2.2	1012	2.8	644.73	27.0	40.0	28.0	40.0			
	1.3	1727	0.9	691.75	11.0	15.0	15.0	29.0	PKD 3490 71M6C / 71M6D	74	234-235
	1.7	1346	1.2	538.92	13.0	15.0	15.0	28.0			
	2.3	997	1.6	399.39	14.0	15.0	15.0	26.0			
	2.5	881	1.8	353.00	14.0	15.0	15.0	26.0			
	3.4	669	2.4	267.79	3.0	15.0	15.0	24.0			
	4.2	537	3.0	215.12	3.0	15.0	15.0	23.0			
	1.2	1806	0.9	1151.03	1.0	15.0	13.0	30.0	PKD 3490 71M4A / 71M4B	74	234-235
	1.6	1370	1.1	873.20	9.0	15.0	15.0	30.0			
	2.0	1085	1.4	691.75	11.0	15.0	15.0	29.0			
	2.6	846	1.8	538.92	13.0	15.0	15.0	28.0			
	3.5	627	2.5	399.39	14.0	15.0	15.0	26.0			
	4.0	554	2.8	353.00	14.0	15.0	15.0	26.0			
	1.5	1349	0.9	1825.06	1.0	15.0	-	-	PKD 3490 63M2B	71	234-235
	2.1	1008	1.2	1363.01	1.0	15.0	15.0	30.0			
	2.4	851	1.4	1151.03	1.0	15.0	13.0	30.0			
	3.2	646	1.8	873.20	9.0	15.0	15.0	30.0			
	4.0	511	2.3	691.75	11.0	15.0	15.0	29.0			
	5.2	398	3.0	538.92	13.0	15.0	15.0	28.0			
	3.0	751	2.2	296.10	14.0	15.0	15.0	23.0	PKD 3390 71M6C / 71M6D	66	230-231
	3.6	634	2.6	250.01	14.0	15.0	15.0	23.0			
	1.9	1181	0.8	473.11	3.0	12.0	9.0	25.0	PKD 2490 71M6C / 71M6D	51	226-227
	2.6	848	1.1	339.72	7.0	12.0	11.0	24.0			
	3.0	743	1.2	297.67	8.0	12.0	12.0	24.0			
	3.9	572	1.2	228.98	8.0	12.0	12.0	22.0			
	2.1	1064	0.8	678.31	1.0	12.0	9.0	25.0	PKD 2490 71M4A / 71M4B	51	226-227
	2.5	882	1.0	562.44	3.0	12.0	8.0	25.0			
	3.0	742	1.2	473.11	3.0	12.0	9.0	25.0			
	4.1	533	1.6	339.72	7.0	12.0	11.0	24.0			
	4.7	467	1.8	297.67	8.0	12.0	12.0	24.0			
	6.1	359	1.8	228.98	8.0	12.0	12.0	22.0			
	2.5	829	0.8	1121.09	1.0	12.0	8.0	25.0	PKD 2490 63M2B	48	226-227
	2.9	704	0.9	952.47	1.0	12.0	10.0	25.0			
	3.7	558	1.2	754.58	1.0	12.0	11.0	25.0			
	4.1	502	1.3	678.31	1.0	12.0	11.0	25.0			
	5.0	416	1.6	562.44	3.0	12.0	8.0	25.0			
	5.9	350	1.9	473.11	3.0	12.0	9.0	25.0			
	8.2	251	2.6	339.72	7.0	12.0	11.0	24.0			
	9.4	220	3.0	297.67	8.0	12.0	12.0	24.0			
	12.2	169	2.9	228.98	8.0	12.0	12.0	22.0			
	3.3	702	1.2	276.87	5.0	12.0	10.0	22.0	PKD 2390 71M6C / 71M6D	46	222-223
	3.9	590	1.2	232.89	8.0	12.0	12.0	22.0			
	4.1	556	1.6	219.34	3.0	12.0	11.0	21.0			
	4.9	468	1.9	184.51	8.0	12.0	12.0	20.0			
	5.3	431	2.1	169.88	5.0	12.0	11.0	19.0			
	5.1	444	1.8	276.87	5.0	12.0	10.0	22.0	PKD 2390 71M4A / 71M4B	46	222-223
	6.0	373	1.9	232.89	8.0	12.0	12.0	22.0			
	6.4	352	2.4	219.34	3.0	12.0	11.0	21.0			
	7.6	296	2.9	184.51	8.0	12.0	12.0	20.0			
	10.1	212	2.9	276.87	5.0	12.0	10.0	22.0	PKD 2390 63M2B	43	222-223
	12.0	178	3.0	232.89	8.0	12.0	12.0	22.0			

P_1 [kW]	n_2 [Min^{-1}]	M_2 [Nm]	f_B	i_{ges}	F_R [N]	F_A [N]	$F_{R\,GR}$ [N]	$F_{A\,GR}$ [N]	Tip / Type / Typ IE2 / IE3	Kg	mm
0.25	3.4	669	1.0	267.91	8.0	20.0	-	-	PKD G 1490 71M6C / 71M6D	44	218-219
	3.8	589	1.1	235.95	8.0	20.0	-	-			
	5.1	445	1.3	178.17	8.0	20.0	-	-			
	6.7	336	1.3	134.41	8.0	20.0	-	-			
	2.8	774	0.8	493.33	7.0	20.0	9.0	20.0	PKD G 1490 71M4A / 71M4B	44	218-219
	3.8	577	1.1	367.72	8.0	20.0	9.0	20.0			
	5.2	420	1.5	267.91	-	-	-	-			
	5.9	370	1.6	235.95	-	-	-	-			
	7.9	280	2.0	178.17	-	-	-	-			
	10.4	211	2.0	134.41	-	-	-	-			
	4.4	466	1.0	630.06	7.0	20.0	9.0	20.0	PKD G 1490 63M2B	41	218-219
	5.0	413	1.1	558.17	7.0	20.0	9.0	20.0			
	5.7	365	1.3	493.33	7.0	20.0	9.0	20.0			
	7.6	272	1.7	367.72	8.0	20.0	9.0	20.0			
	10.5	198	2.3	267.91	8.0	20.0	-	-			
	11.9	174	2.7	235.95	8.0	20.0	-	-			
	3.2	704	0.9	277.79	8.0	20.0	9.0	20.0	PKD G 1390 71M6C / 71M6D	39	214-215
	3.8	595	1.0	234.59	9.0	20.0	9.0	20.0			
	4.4	522	1.2	206.01	9.0	20.0	9.0	20.0			
	4.9	464	1.4	183.15	8.0	20.0	9.0	20.0			
	6.0	380	1.7	149.85	9.0	20.0	9.0	20.0			
	6.3	361	1.8	142.45	8.0	20.0	9.0	20.0			
	7.7	295	2.2	116.55	9.0	20.0	9.0	20.0			
	9.8	233	2.3	91.88	9.0	20.0	9.0	20.0			
	5.0	445	1.3	277.79	8.0	20.0	9.0	20.0	PKD G 1390 71M4A / 71M4B	39	214-215
	6.0	376	1.6	234.59	9.0	20.0	9.0	20.0			
	6.8	330	1.8	206.01	9.0	20.0	9.0	20.0			
	7.6	294	2.1	183.15	8.0	20.0	9.0	20.0			
	9.3	240	2.5	149.85	9.0	20.0	9.0	20.0			
	9.8	228	2.7	142.45	8.0	20.0	9.0	20.0			
	10.1	213	2.1	277.79	8.0	20.0	9.0	20.0	PKD G 1390 63M2B	36	214-215
	11.9	180	2.5	234.59	9.0	20.0	9.0	20.0			
	13.6	158	2.9	206.01	9.0	20.0	9.0	20.0			
	4.2	533	0.8	213.26	5.0	20.0	-	-	PKD 1490 71M6C / 71M6D	43	210-211
	5.1	445	0.9	178.17	5.0	20.0	-	-			
	6.4	354	1.2	141.69	5.0	20.0	-	-			
	4.4	503	0.8	320.68	-	-	-	-	PKD 1490 71M4A / 71M4B	43	210-211
	5.0	443	0.9	282.43	-	-	-	-			
	6.6	335	1.2	213.26	-	-	-	-			
	7.9	280	1.4	178.17	-	-	-	-			
	9.9	222	1.8	141.69	-	-	-	-			
	6.4	325	0.9	440.14	5.0	20.0	9.0	20.0	PKD 1490 63M2B	40	210-211
	8.7	237	1.3	320.68	5.0	20.0	-	-			
	9.9	209	1.5	282.43	5.0	20.0	-	-			
	13.1	158	1.9	213.26	5.0	20.0	-	-			
	15.7	132	2.3	178.17	5.0	20.0	-	-			
	19.8	105	2.9	141.69	5.0	20.0	-	-			
	4.4	522	0.8	206.01	6.0	20.0	7.0	20.0	PKD 1390 71M6C / 71M6D	38	206-207
	4.9	464	0.9	183.15	4.0	20.0	9.0	20.0			
	5.4	423	1.0	166.82	6.0	20.0	9.0	20.0			
	6.4	357	1.2	140.87	7.0	20.0	9.0	20.0			
	7.3	314	1.3	123.71	7.0	20.0	9.0	20.0			
	8.2	279	1.5	109.98	5.0	20.0	9.0	20.0			
	9.2	247	1.7	97.43	5.0	20.0	9.0	20.0			
	10.5	218	1.9	86.12	5.0	20.0	9.0	20.0			
	11.7	194	2.2	76.68	5.0	20.0	9.0	20.0			
	14.3	159	2.6	62.74	5.0	20.0	9.0	20.0			
	16.3	140	3.0	55.26	5.0	20.0	9.0	20.0			

P_1 [kW]	n_2 [Min^{-1}]	M_2 [Nm]	f_B	i_{ges}	F_R [N]	F_A [N]	$F_{R\,GR}$ [N]	$F_{A\,GR}$ [N]	Tip / Type / Typ IE2 / IE3	Kg	mm
0.25	4.2	533	0.8	332.51	5.0	20.0	8.0	20.0	PKD 1390 71M4A / 71M4B	38	206-207
	5.0	450	0.9	280.80	4.0	20.0	8.0	20.0			
	5.7	395	1.0	246.59	5.0	20.0	8.0	20.0			
	6.8	330	1.2	206.01	6.0	20.0	9.0	20.0			
	7.6	294	1.4	183.15	4.0	20.0	8.0	20.0			
	8.4	267	1.5	166.82	6.0	20.0	9.0	20.0			
	9.9	226	1.8	140.87	7.0	20.0	9.0	20.0			
	11.3	198	2.0	123.71	7.0	20.0	9.0	20.0			
	8.4	255	1.2	332.51	5.0	20.0	8.0	20.0	PKD 1390 63M2B	35	206-207
	10.0	215	1.4	280.80	4.0	20.0	8.0	20.0			
	11.4	189	1.6	246.59	5.0	20.0	8.0	20.0			
	13.6	158	1.9	206.01	6.0	20.0	9.0	20.0			
	16.8	128	2.4	166.82	6.0	20.0	9.0	20.0			
	19.9	108	2.8	140.87	7.0	20.0	9.0	20.0			
	14.1	165	2.9	63.96	8.0	12.0	-	-	PKD H 5290 71M6C / 71M6D	47	202-203
	16.1	144	2.9	55.96	8.0	12.0	-	-			
	15.2	152	2.6	59.20	6.1	12.0	-	-	PKD F 4290 71M6C / 71M6D	35	198-199
	17.4	133	2.7	51.80	6.1	12.0	-	-			
	14.3	162	0.8	62.77	4.5	9.0	-	-	PKD C 1290 71M6C / 71M6D	26	194-195
	16.4	141	0.8	54.92	4.5	9.0	-	-			
	18.1	128	1.4	49.69	4.6	9.0	-	-			
	20.7	112	1.4	43.48	4.6	9.0	-	-			
	23.3	99	2.0	38.59	4.6	9.0	-	-			
	26.7	87	2.2	33.76	4.6	9.0	-	-			
	22.3	103	1.2	62.77	4.5	9.0	-	-	PKD C 1290 71M4A / 71M4B	26	194-195
	25.5	90	1.2	54.92	4.5	9.0	-	-			
	28.2	81	2.1	49.69	4.6	9.0	-	-			
	32.2	71	2.1	43.48	4.6	9.0	-	-			
	36.3	63	3.0	38.59	4.6	9.0	-	-			
	44.6	50	1.9	62.77	4.5	9.0	-	-	PKD C 1290 63M2B	23	194-195
	51.0	44	1.9	54.92	4.5	9.0	-	-			
	21.8	106	1.1	41.23	3.1	5.6	-	-	PKD B 0290 71M6C / 71M6D	19	190-191
	24.9	93	1.1	36.08	3.2	5.6	-	-			
	27.9	83	1.5	32.24	3.2	5.6	-	-			
	31.9	73	1.7	28.21	3.3	5.6	-	-			
	47.8	48	1.8	18.81	3.4	5.6	-	-			
	26.2	88	1.0	53.52	2.9	5.6	-	-	PKD B 0290 71M4A / 71M4B	19	190-191
	29.9	77	1.0	46.83	3.0	5.6	-	-			
	34.0	67	1.7	41.23	3.1	5.6	-	-			
	38.8	59	1.7	36.08	3.2	5.6	-	-			
	43.4	53	2.3	32.24	3.2	5.6	-	-			
	49.6	46	2.6	28.21	3.3	5.6	-	-			
	74.4	31	2.8	18.81	3.4	5.6	-	-			
	44.3	50	0.8	63.21	2.9	5.6	-	-	PKD B 0290 63M2B	16	190-191
	52.3	42	1.6	53.52	2.9	5.6	-	-			
	59.8	37	1.5	46.83	3.0	5.6	-	-			
	67.9	33	2.7	41.23	3.1	5.6	-	-			
	77.6	29	2.7	36.08	3.2	5.6	-	-			
	22.7	102	0.8	39.64	3.0	5.1	-	-	PKD A 0290 71M6C / 71M6D	15	186-187
	25.9	89	0.9	34.69	3.1	5.1	-	-			
	29.9	78	0.9	30.13	3.1	5.1	-	-			
	34.1	68	1.4	26.36	3.2	5.1	-	-			
	38.7	60	1.6	23.26	3.2	5.1	-	-			
	44.2	52	1.8	20.35	3.2	5.1	-	-			
	51.2	45	1.4	17.58	3.2	5.1	-	-			
	66.3	35	2.3	13.57	3.2	5.1	-	-			
	35.3	65	1.2	39.64	3.0	5.1	-	-	PKD A 0290 71M4A / 71M4B	15	186-187
	40.4	57	1.3	34.69	3.1	5.1	-	-			
	46.5	49	1.4	30.13	3.1	5.1	-	-			
	53.1	43	2.1	26.36	3.2	5.1	-	-			
	60.2	38	2.4	23.26	3.2	5.1	-	-			
	68.8	33	2.7	20.35	3.2	5.1	-	-			
	79.6	29	2.1	17.58	3.2	5.1	-	-			

P_1 [kW]	n_2 [Min^{-1}]	M_2 [Nm]	f_B	i_{ges}	F_R [N]	F_A [N]	$F_{R\,GR}$ [N]	$F_{A\,GR}$ [N]	Tip / Type / Typ IE2 / IE3	Kg	mm
0.25	51.3	43	0.9	54.62	3.0	5.1	-	-	PKD A 0290 63M2B	12	186-187
	58.6	38	0.9	47.79	3.0	5.1	-	-			
	70.6	31	1.9	39.64	3.0	5.1	-	-			
	80.7	28	2.1	34.69	3.1	5.1	-	-			
	92.9	24	2.2	30.13	3.1	5.1	-	-			
0.37	0.3	11810	0.8	3244.21	64.0	50.0	-	-	PKD 7390/32 80M6A	364	278
	0.4	8419	1.1	2312.67	64.0	50.0	-	-			
	0.5	6950	1.3	1909.17	64.0	50.0	-	-			
	0.6	5272	1.7	1448.34	64.0	50.0	66.0	50.0			
	0.8	4245	2.1	1166.22	64.0	50.0	66.0	50.0			
	0.9	3540	2.5	972.42	64.0	50.0	66.0	50.0			
	0.7	4337	2.0	1909.17	-	-	-	-	PKD 7390/32 71M4B / 71M4C	362	278
	1.0	3290	2.6	1448.34	64.0	50.0	66.0	50.0			
	0.3	11325	0.8	3110.88	64.0	50.0	-	-	PKD 6390/32 80M6A	364	278
	0.4	8073	1.1	2217.63	64.0	50.0	-	-			
	0.5	6664	1.3	1830.71	64.0	50.0	-	-			
	0.6	5056	1.7	1388.82	64.0	50.0	66.0	50.0			
	0.8	4071	2.1	1118.29	64.0	50.0	66.0	50.0			
	1.0	3394	2.5	932.46	64.0	50.0	66.0	50.0			
	0.8	4159	2.0	1830.71	-	-	-	-	PKD 6390/32 71M4B / 71M4C	362	278
	1.0	3155	2.6	1388.82	64.0	50.0	66.0	50.0			
	0.6	5173	1.0	1399.82	33.0	45.0	38.0	45.0	PKD 5490 80M6A	208	250-251
	0.8	3925	1.3	1061.93	36.0	45.0	38.0	45.0			
	1.0	3441	1.5	931.06	36.0	45.0	38.0	45.0			
	1.3	2601	1.9	703.71	37.0	45.0	38.0	45.0			
	1.6	2146	2.3	580.56	33.0	45.0	38.0	45.0			
	2.0	1697	3.0	459.05	33.0	45.0	38.0	45.0			
	0.7	4352	1.1	1874.35	-	-	-	-	PKD 5490 71M4B / 71M4C	206	250-251
	1.0	3250	1.5	1399.82	33.0	45.0	38.0	45.0			
	1.3	2466	1.9	1061.93	36.0	45.0	38.0	45.0			
	1.5	2162	2.2	931.06	36.0	45.0	38.0	45.0			
	2.0	1634	2.9	703.71	37.0	45.0	38.0	45.0			
	0.7	4089	0.9	3736.07	33.0	45.0	-	-	PKD 5490 71M2A	206	250-251
	1.5	2051	1.8	1874.35	33.0	45.0	-	-			
	2.0	1532	2.4	1399.82	33.0	45.0	38.0	45.0			
	1.0	3261	0.9	882.35	24.0	40.0	28.0	40.0	PKD 4490 80M6A	130	242-243
	1.4	2383	1.2	644.73	26.0	40.0	28.0	40.0			
	1.6	2099	1.4	567.85	27.0	40.0	28.0	40.0			
	2.6	1295	2.3	350.42	23.0	40.0	28.0	38.0			
	3.2	1031	2.9	278.98	23.0	40.0	28.0	35.0			
	0.9	3522	0.8	1516.84	23.0	40.0	28.0	40.0	PKD 4490 71M4B / 71M4C	128	242-243
	1.3	2586	1.1	1113.75	21.0	40.0	28.0	40.0			
	1.6	2049	1.4	882.35	24.0	40.0	28.0	40.0			
	2.2	1497	1.9	644.73	26.0	40.0	28.0	40.0			
	2.5	1319	2.1	567.85	27.0	40.0	28.0	40.0			
	1.2	2621	0.8	2395.28	23.0	40.0	-	-	PKD 4490 71M2A	128	242-243
	1.3	2330	0.9	2128.80	23.0	40.0	-	-			
	1.8	1660	1.3	1516.84	23.0	40.0	28.0	40.0			
	2.5	1219	1.7	1113.75	21.0	40.0	28.0	40.0			
	3.2	966	2.2	882.35	24.0	40.0	28.0	40.0			
	4.3	706	3.0	644.73	26.0	40.0	28.0	40.0			
	2.3	1476	1.1	399.39	13.0	15.0	15.0	25.0	PKD 3490 80M6A	76	234-235
	2.5	1305	1.2	353.00	13.0	15.0	15.0	24.0			
	3.4	990	1.6	267.79	14.0	15.0	15.0	23.0			
	4.2	795	2.0	215.12	1.0	15.0	15.0	22.0			
	5.4	619	2.6	167.59	1.0	15.0	15.0	21.0			

P_1 [kW]	n_2 [Min^{-1}]	M_2 [Nm]	f_B	i_{ges}	F_R [N]	F_A [N]	$F_{R\,GR}$ [N]	$F_{A\,GR}$ [N]	Tip / Type / Typ IE2 / IE3	Kg	mm
0.37	1.6	2028	0.8	873.20	12.0	15.0	15.0	30.0	PKD 3490 71M4B / 71M4C	74	234-235
	2.0	1606	1.0	691.75	3.0	15.0	15.0	27.0			
	2.6	1251	1.2	538.92	10.0	15.0	15.0	26.0			
	3.5	927	1.7	399.39	13.0	15.0	15.0	25.0			
	4.0	820	1.9	353.00	13.0	15.0	15.0	24.0			
	5.2	622	2.5	267.79	14.0	15.0	15.0	23.0			
	2.1	1492	0.8	1363.01	12.0	15.0	15.0	30.0	PKD 3490 71M2A	74	234-235
	2.4	1260	0.9	1151.03	12.0	15.0	13.0	30.0			
	3.2	956	1.2	873.20	12.0	15.0	15.0	30.0			
	4.0	757	1.6	691.75	3.0	15.0	15.0	27.0			
	5.2	590	2.0	538.92	10.0	15.0	15.0	26.0			
	7.0	437	2.7	399.39	13.0	15.0	15.0	25.0			
	7.9	386	3.0	353.00	13.0	15.0	15.0	24.0			
	3.0	1111	1.5	296.10	14.0	15.0	15.0	23.0	PKD 3390 80M6A	68	230-231
	3.6	938	1.7	250.01	14.0	15.0	15.0	22.0			
	3.8	878	1.9	234.13	14.0	15.0	15.0	20.0			
	4.6	742	2.2	197.69	14.0	15.0	15.0	19.0			
	4.7	703	2.2	296.10	14.0	15.0	15.0	23.0	PKD 3390 71M4B / 71M4C	66	230-231
	5.6	593	2.6	250.01	14.0	15.0	15.0	22.0			
	3.0	1099	0.8	473.11	3.0	12.0	9.0	25.0	PKD 2490 71M4B / 71M4C	51	226-227
	4.1	789	1.1	339.72	0.4	12.0	9.0	23.0			
	4.7	691	1.2	297.67	4.0	12.0	10.0	22.0			
	6.1	532	1.2	228.98	8.0	12.0	12.0	22.0			
	3.7	826	0.8	754.58	3.0	12.0	8.0	25.0	PKD 2490 71M2A	51	226-227
	4.1	742	0.9	678.31	3.0	12.0	9.0	25.0			
	5.0	616	1.1	562.44	3.0	12.0	8.0	25.0			
	5.9	518	1.3	473.11	3.0	12.0	9.0	25.0			
	8.2	372	1.8	339.72	4.0	12.0	9.0	23.0			
	9.4	326	2.0	297.67	4.0	12.0	10.0	22.0			
	12.2	251	2.0	228.98	8.0	12.0	12.0	22.0			
	4.1	823	1.1	219.34	7.0	12.0	11.0	21.0	PKD 2390 80M6A	48	222-223
	4.9	692	1.3	184.51	8.0	12.0	12.0	20.0			
	5.3	637	1.4	169.88	6.0	12.0	11.0	19.0			
	6.5	516	1.7	137.63	5.0	12.0	12.0	18.0			
	7.8	434	2.1	115.77	5.0	12.0	12.0	18.0			
	9.1	371	2.4	98.92	5.0	12.0	12.0	18.0			
	10.6	320	2.8	85.23	5.0	12.0	12.0	17.0			
	5.1	657	1.2	276.87	5.0	12.0	10.0	22.0	PKD 2390 71M4B / 71M4C	46	222-223
	6.0	553	1.3	232.89	7.0	12.0	11.0	21.0			
	6.4	520	1.7	219.34	7.0	12.0	11.0	21.0			
	7.6	438	2.0	184.51	8.0	12.0	12.0	20.0			
	8.2	403	2.1	169.88	6.0	12.0	11.0	19.0			
	10.1	314	1.9	276.87	5.0	12.0	10.0	22.0	PKD 2390 71M2A	46	222-223
	12.0	264	2.0	232.89	7.0	12.0	11.0	21.0			
	12.8	249	2.6	219.34	7.0	12.0	11.0	21.0			
	5.2	622	1.0	267.91	-	-	-	-	PKD G 1490 71M4B / 71M4C	44	218-219
	5.9	548	1.1	235.95	-	-	-	-			
	7.9	414	1.4	178.17	-	-	-	-			
	10.4	312	1.4	134.41	-	-	-	-			
	5.0	611	0.8	558.17	7.0	20.0	9.0	20.0	PKD G 1490 71M2A	44	218-219
	5.7	540	0.9	493.33	7.0	20.0	9.0	20.0			
	7.6	402	1.2	367.72	7.0	20.0	9.0	20.0			
	10.5	293	1.6	267.91	7.0	20.0	-	-			
	11.9	258	1.8	235.95	7.0	20.0	-	-			
	15.7	195	2.2	178.17	7.0	20.0	-	-			
	20.8	147	2.2	134.41	7.0	20.0	-	-			

P_1 [kW]	n_2 [Min^{-1}]	M_2 [Nm]	f_B	i_{ges}	F_R [N]	F_A [N]	$F_{R\,GR}$ [N]	$F_{A\,GR}$ [N]	Tip / Type / Typ IE2 / IE3	Kg	mm
0.37	4.9	687	0.9	183.15	8.0	20.0	9.0	20.0	PKD G 1390 80M6A	41	214-215
	6.0	562	1.1	149.85	9.0	20.0	9.0	20.0			
	6.3	534	1.2	142.45	8.0	20.0	9.0	20.0			
	7.7	437	1.5	116.55	9.0	20.0	9.0	20.0			
	9.8	345	1.5	91.88	9.0	20.0	9.0	20.0			
	11.1	305	2.1	81.40	8.0	20.0	9.0	20.0			
	12.5	270	2.3	71.94	8.0	20.0	9.0	20.0			
	14.0	240	2.7	64.06	8.0	20.0	9.0	20.0			
	5.0	659	0.9	277.79	8.0	20.0	9.0	20.0	PKD G 1390 71M4B / 71M4C	39	214-215
	6.0	557	1.1	234.59	7.0	20.0	9.0	20.0			
	6.8	489	1.2	206.01	8.0	20.0	9.0	20.0			
	7.6	435	1.4	183.15	8.0	20.0	9.0	20.0			
	9.3	356	1.7	149.85	9.0	20.0	9.0	20.0			
	9.8	338	1.8	142.45	8.0	20.0	9.0	20.0			
	12.0	277	2.2	116.55	9.0	20.0	9.0	20.0			
	15.2	218	2.3	91.88	9.0	20.0	9.0	20.0			
	10.1	315	1.4	277.79	8.0	20.0	9.0	20.0	PKD G 1390 71M2A	39	214-215
	11.9	266	1.7	234.59	7.0	20.0	9.0	20.0			
	13.6	234	2.0	206.01	8.0	20.0	9.0	20.0			
	15.3	208	2.2	183.15	8.0	20.0	9.0	20.0			
	18.7	170	2.7	149.85	9.0	20.0	9.0	20.0			
	19.7	162	2.9	142.45	8.0	20.0	-	-			
	6.6	495	0.8	213.26	-	-	-	-	PKD 1490 71M4B / 71M4C	43	210-211
	7.9	414	1.0	178.17	-	-	-	-			
	9.9	329	1.2	141.69	-	-	-	-			
	8.7	351	0.9	320.68	5.0	20.0	-	-	PKD 1490 71M2A	43	210-211
	9.9	309	1.0	282.43	5.0	20.0	-	-			
	13.1	233	1.3	213.26	5.0	20.0	-	-			
	15.7	195	1.6	178.17	5.0	20.0	-	-			
	19.8	155	2.0	141.69	5.0	20.0	-	-			
	8.2	413	1.0	109.98	6.0	20.0	9.0	20.0	PKD 1390 80M6A	40	206-207
	9.2	366	1.1	97.43	7.0	20.0	9.0	20.0			
	10.5	323	1.3	86.12	7.0	20.0	9.0	20.0			
	11.7	288	1.5	76.68	5.0	20.0	9.0	20.0			
	14.3	235	1.8	62.74	5.0	20.0	9.0	20.0			
	16.3	207	2.0	55.26	5.0	20.0	9.0	20.0			
	18.4	184	2.3	48.92	5.0	20.0	9.0	20.0			
	21.6	157	2.7	41.72	5.0	20.0	9.0	20.0			
	6.8	489	0.8	206.01	6.0	20.0	9.0	20.0	PKD 1390 71M4B / 71M4C	38	206-207
	7.6	435	0.9	183.15	4.0	20.0	8.0	20.0			
	8.4	396	1.0	166.82	-	-	9.0	20.0			
	9.9	334	1.2	140.87	6.0	20.0	9.0	20.0			
	11.3	294	1.4	123.71	6.0	20.0	9.0	20.0			
	12.7	261	1.5	109.98	6.0	20.0	9.0	20.0			
	14.4	231	1.7	97.43	7.0	20.0	9.0	20.0			
	16.3	204	2.0	86.12	7.0	20.0	9.0	20.0			
	8.4	377	0.8	332.51	6.0	20.0	8.0	20.0	PKD 1390 71M2A	38	206-207
	10.0	318	1.0	280.80	6.0	20.0	8.0	20.0			
	11.4	280	1.1	246.59	6.0	20.0	8.0	20.0			
	13.6	234	1.3	206.01	6.0	20.0	9.0	20.0			
	15.3	208	1.5	183.15	4.0	20.0	8.0	20.0			
	16.8	189	1.6	166.82	6.0	20.0	9.0	20.0			
	19.9	160	1.9	140.87	6.0	20.0	9.0	20.0			
	22.6	140	2.2	123.71	6.0	20.0	9.0	20.0			
	25.5	125	2.4	109.98	6.0	20.0	9.0	20.0			
	28.7	110	2.8	97.43	7.0	20.0	9.0	20.0			
	14.1	244	2.0	63.96	7.9	12.0	-	-	PKD H 5290 80M6A	49	202-203
	16.1	213	2.0	55.96	8.0	12.0	-	-			
	17.2	200	3.0	52.42	8.0	12.0	-	-			
	19.6	175	3.0	45.86	8.0	12.0	-	-			
	22.1	155	3.0	40.77	8.0	12.0	-	-			
	21.9	155	3.0	63.96	7.9	12.0	-	-	PKD H 5290 71M4B / 71M4C	47	202-203
	25.0	136	3.0	55.96	8.0	12.0	-	-			

P_1 [kW]	n_2 [Min^{-1}]	M_2 [Nm]	f_B	i_{ges}	F_R [N]	F_A [N]	$F_{R\,GR}$ [N]	$F_{A\,GR}$ [N]	Tip / Type / Typ IE2 / IE3	Kg	mm
0.37	15.2	226	1.7	59.20	6.1	12.0	-	-	PKD F 4290 80M6A	37	198-199
	17.4	197	1.8	51.80	6.1	12.0	-	-			
	18.7	183	2.2	48.01	6.1	12.0	-	-			
	21.4	160	2.2	42.01	6.1	12.0	-	-			
	24.1	142	2.4	37.34	6.1	12.0	-	-			
	23.6	143	2.6	59.20	6.1	12.0	-	-	PKD F 4290 71M4B / 71M4C	35	198-199
	27.0	126	2.7	51.80	6.1	12.0	-	-			
	18.1	189	0.9	49.69	4.3	9.0	-	-	PKD C 1290 80M6A	28	194-195
	20.7	166	1.0	43.48	4.4	9.0	-	-			
	23.3	147	1.4	38.59	4.5	9.0	-	-			
	26.7	129	1.5	33.76	4.6	9.0	-	-			
	28.8	119	1.7	31.27	4.5	9.0	-	-			
	32.9	104	2.3	27.36	4.5	9.0	-	-			
	37.0	93	2.4	24.32	4.5	9.0	-	-			
	41.0	84	2.4	21.94	4.5	9.0	-	-			
	22.3	152	0.8	62.77	4.1	9.0	-	-	PKD C 1290 71M4B / 71M4C	26	194-195
	25.5	133	0.8	54.92	4.3	9.0	-	-			
	28.2	120	1.4	49.69	4.3	9.0	-	-			
	32.2	105	1.4	43.48	4.4	9.0	-	-			
	36.3	94	2.0	38.59	4.5	9.0	-	-			
	41.5	82	2.3	33.76	4.6	9.0	-	-			
	44.6	74	1.3	62.77	4.1	9.0	-	-	PKD C 1290 71M2A	26	194-195
	51.0	65	1.3	54.92	4.3	9.0	-	-			
	56.3	58	2.2	49.69	4.3	9.0	-	-			
	64.4	51	2.2	43.48	4.4	9.0	-	-			
	21.8	157	0.8	41.23	2.7	5.6	-	-	PKD B 0290 80M6A	21	190-191
	24.9	137	0.8	36.08	2.9	5.6	-	-			
	27.9	123	1.0	32.24	3.0	5.6	-	-			
	31.9	107	1.2	28.21	3.1	5.6	-	-			
	34.6	99	1.3	25.99	3.3	5.6	-	-			
	39.6	87	1.5	22.74	3.3	5.6	-	-			
	47.8	72	1.2	18.81	3.3	5.6	-	-			
	57.6	59	2.1	15.62	2.9	5.6	-	-			
	66.8	51	2.5	13.48	2.9	5.6	-	-			
	76.3	45	2.7	11.79	2.9	5.6	-	-			
	87.0	39	2.9	10.35	2.9	5.6	-	-			
	34.0	100	1.2	41.23	2.7	5.6	-	-	PKD B 0290 71M4B / 71M4C	19	190-191
	38.8	87	1.1	36.08	2.9	5.6	-	-			
	43.4	78	1.5	32.24	3.0	5.6	-	-			
	49.6	68	1.8	28.21	3.1	5.6	-	-			
	74.4	46	1.9	18.81	3.3	5.6	-	-			
	52.3	63	1.1	53.52	2.7	5.6	-	-	PKD B 0290 71M2A	19	190-191
	59.8	55	1.0	46.83	2.7	5.6	-	-			
	67.9	48	1.8	41.23	2.7	5.6	-	-			
	77.6	42	1.8	36.08	2.9	5.6	-	-			
	86.8	38	2.4	32.24	3.0	5.6	-	-			
	99.3	33	2.8	28.21	3.1	5.6	-	-			
	148.9	22	2.9	18.81	3.3	5.6	-	-			
	34.1	100	0.9	26.36	3.0	5.1	-	-	PKD A 0290 80M6A	17	186-187
	38.7	89	1.1	23.26	3.1	5.1	-	-			
	44.2	78	1.2	20.35	3.1	5.1	-	-			
	51.2	67	0.9	17.58	3.2	5.1	-	-			
	66.3	52	1.5	13.57	3.2	5.1	-	-			
	81.4	42	2.2	11.05	3.0	5.1	-	-			
	93.1	37	2.6	9.67	3.0	5.1	-	-			
	100.1	34	2.8	8.99	3.0	5.1	-	-			
	35.3	96	0.8	39.64	2.6	5.1	-	-	PKD A 0290 71M4B / 71M4C	15	186-187
	40.4	84	0.9	34.69	2.8	5.1	-	-			
	46.5	73	1.0	30.13	2.9	5.1	-	-			
	53.1	64	1.4	26.36	3.0	5.1	-	-			
	60.2	56	1.6	23.26	3.1	5.1	-	-			
	68.8	49	1.8	20.35	3.1	5.1	-	-			
	79.6	43	1.4	17.58	3.2	5.1	-	-			
	103.2	33	2.3	13.57	3.2	5.1	-	-			

P_1 [kW]	n_2 [Min^{-1}]	M_2 [Nm]	f_B	i_{ges}	F_R [N]	F_A [N]	$F_{R\,GR}$ [N]	$F_{A\,GR}$ [N]	Tip / Type / Typ IE2 / IE3	Kg	mm
0.37	70.6	47	1.3	39.64	2.6	5.1	-	-	PKD A 0290 71M2A	15	186-187
	80.7	41	1.4	34.69	2.8	5.1	-	-			
	92.9	35	1.5	30.13	2.9	5.1	-	-			
	106.2	31	2.2	26.36	3.0	5.1	-	-			
	120.4	27	2.5	23.26	3.1	5.1	-	-			
	137.6	24	2.9	20.35	3.1	5.1	-	-			
	159.3	21	2.2	17.58	3.2	5.1	-	-			
0.55	0.5	10331	0.9	1909.17	61.0	50.0	-	-	PKD 7390/32 80M6B	364	278
	0.6	7837	1.1	1448.34	61.0	50.0	66.0	50.0			
	0.8	6311	1.4	1166.22	63.0	50.0	66.0	50.0			
	0.9	5262	1.7	972.42	64.0	50.0	66.0	50.0			
	1.2	4140	2.2	765.14	64.0	50.0	66.0	50.0			
	1.5	3226	2.8	596.10	64.0	50.0	66.0	50.0			
	0.4	10954	0.8	3244.21	-	-	-	-	PKD 7390/32 80M4B / 80M4C	364	278
	0.6	7809	1.1	2312.67	-	-	-	-			
	0.7	6447	1.3	1909.17	-	-	-	-			
	1.0	4890	1.7	1448.34	61.0	50.0	66.0	50.0			
	1.2	3938	2.2	1166.22	63.0	50.0	66.0	50.0			
	1.4	3283	2.6	972.42	64.0	50.0	66.0	50.0			
	1.5	2997	2.2	1909.17	61.0	50.0	-	-	PKD 7390/32 71M2B	362	278
	1.9	2274	2.8	1448.34	61.0	50.0	66.0	50.0			
	0.5	9907	0.9	1830.71	61.0	50.0	-	-	PKD 6390/32 80M6B	364	278
	0.6	7515	1.1	1388.82	61.0	50.0	66.0	50.0			
	0.8	6051	1.4	1118.29	63.0	50.0	66.0	50.0			
	1.0	5046	1.7	932.46	64.0	50.0	66.0	50.0			
	1.2	3970	2.2	733.69	64.0	50.0	66.0	50.0			
	1.6	3093	2.8	571.60	64.0	50.0	66.0	50.0			
	0.5	10504	0.8	3110.88	-	-	-	-	PKD 6390/32 80M4B / 80M4C	364	278
	0.6	7488	1.1	2217.63	-	-	-	-			
	0.8	6182	1.3	1830.71	-	-	-	-			
	1.0	4689	1.7	1388.82	61.0	50.0	66.0	50.0			
	1.3	3776	2.2	1118.29	63.0	50.0	66.0	50.0			
	1.5	3149	2.6	932.46	64.0	50.0	66.0	50.0			
	1.5	2874	2.2	1830.71	61.0	50.0	-	-	PKD 6390/32 71M2B	362	278
	2.0	2180	2.9	1388.82	61.0	50.0	66.0	50.0			
	0.8	5834	0.9	1061.93	31.0	45.0	38.0	45.0	PKD 5490 80M6B	208	250-251
	1.0	5115	1.0	931.06	33.0	45.0	38.0	45.0			
	1.3	3866	1.3	703.71	36.0	45.0	38.0	45.0			
	1.6	3189	1.6	580.56	37.0	45.0	38.0	45.0			
	2.0	2522	2.0	459.05	37.0	45.0	38.0	45.0			
	2.6	1916	2.6	348.85	33.0	45.0	38.0	45.0			
	1.0	4832	1.0	1399.82	24.0	45.0	38.0	45.0	PKD 5490 80M4B / 80M4C	208	250-251
	1.3	3665	1.3	1061.93	31.0	45.0	38.0	45.0			
	1.5	3214	1.5	931.06	33.0	45.0	38.0	45.0			
	2.0	2429	2.0	703.71	36.0	45.0	38.0	45.0			
	2.4	2004	2.4	580.56	37.0	45.0	38.0	45.0			
	3.0	1584	3.0	459.05	37.0	45.0	38.0	45.0			
	1.5	3049	1.2	1874.35	24.0	45.0	-	-	PKD 5490 71M2B	206	250-251
	2.0	2277	1.6	1399.82	24.0	45.0	38.0	45.0			
	2.6	1727	2.1	1061.93	31.0	45.0	38.0	45.0			
	3.0	1515	2.4	931.06	33.0	45.0	38.0	45.0			
	4.0	1145	2.7	703.71	36.0	45.0	38.0	45.0			
	1.4	3542	0.8	644.73	23.0	40.0	28.0	40.0	PKD 4490 80M6B	130	242-243
	1.6	3120	0.9	567.85	24.0	40.0	28.0	40.0			
	2.6	1925	1.5	350.42	27.0	40.0	28.0	47.0			
	3.2	1533	1.9	278.98	27.0	40.0	28.0	35.0			
	4.4	1121	2.6	204.13	23.0	40.0	28.0	33.0			
	1.6	3046	0.9	882.35	19.0	40.0	28.0	40.0	PKD 4490 80M4B / 80M4C	130	242-243
	2.2	2225	1.3	644.73	23.0	40.0	28.0	40.0			
	2.5	1960	1.4	567.85	24.0	40.0	28.0	40.0			
	4.0	1210	2.3	350.42	27.0	40.0	28.0	37.0			
	5.0	963	2.9	278.98	27.0	40.0	28.0	35.0			

P_1 [kW]	n_2 [Min^{-1}]	M_2 [Nm]	f_B	i_{ges}	F_R [N]	F_A [N]	$F_{R\,GR}$ [N]	$F_{A\,GR}$ [N]	Tip / Type / Typ IE2 / IE3	Kg	mm
0.55	1.8	2467	0.9	1516.84	19.0	40.0	28.0	40.0	PKD 4490 71M2B	128	242-243
	2.5	1812	1.2	1113.75	19.0	40.0	28.0	40.0			
	3.2	1435	1.5	882.35	19.0	40.0	28.0	40.0			
	4.3	1049	2.0	644.73	23.0	40.0	28.0	40.0			
	4.9	924	2.3	567.85	24.0	40.0	28.0	40.0			
	2.5	1939	0.8	353.00	10.0	15.0	15.0	22.0	PKD 3490 80M6B	76	234-235
	3.4	1471	1.1	267.79	14.0	15.0	15.0	23.0			
	4.2	1182	1.4	215.12	15.0	15.0	15.0	22.0			
	5.4	921	1.8	167.59	15.0	15.0	15.0	21.0			
	3.5	1379	1.1	399.39	8.0	15.0	15.0	23.0	PKD 3490 80M4B / 80M4C	76	234-235
	4.0	1218	1.3	353.00	10.0	15.0	15.0	22.0			
	5.2	924	1.7	267.79	14.0	15.0	15.0	23.0			
	6.5	743	2.1	215.12	15.0	15.0	15.0	22.0			
	8.4	578	2.7	167.59	15.0	15.0	15.0	21.0			
	3.2	1420	0.8	873.20	8.0	15.0	15.0	30.0	PKD 3490 71M2B	74	234-235
	4.0	1125	1.0	691.75	8.0	15.0	15.0	27.0			
	5.2	877	1.3	538.92	8.0	15.0	15.0	26.0			
	7.0	650	1.8	399.39	8.0	15.0	15.0	23.0			
	7.9	574	2.1	353.00	10.0	15.0	15.0	22.0			
	10.5	436	2.7	267.79	14.0	15.0	15.0	23.0			
	3.0	1651	1.0	296.10	12.0	15.0	15.0	21.0	PKD 3390 80M6B	68	230-231
	3.6	1394	1.2	250.01	13.0	15.0	15.0	20.0			
	3.8	1306	1.2	234.13	13.0	15.0	15.0	20.0			
	4.6	1103	1.5	197.69	14.0	15.0	15.0	19.0			
	8.1	619	2.6	110.94	14.0	15.0	15.0	17.0			
	4.7	1044	1.5	296.10	12.0	15.0	15.0	21.0	PKD 3390 80M4B / 80M4C	68	230-231
	5.6	882	1.8	250.01	13.0	15.0	15.0	20.0			
	6.0	826	1.9	234.13	13.0	15.0	15.0	20.0			
	7.1	697	2.2	197.69	14.0	15.0	15.0	19.0			
	9.5	499	2.4	296.10	12.0	15.0	15.0	21.0	PKD 3390 71M2B	66	230-231
	11.2	421	2.8	250.01	13.0	15.0	15.0	20.0			
	5.9	770	0.8	473.11	3.0	12.0	9.0	25.0	PKD 2490 71M2B	51	226-227
	8.2	553	1.2	339.72	3.0	12.0	9.0	23.0			
	9.4	484	1.3	297.67	3.0	12.0	10.0	22.0			
	12.2	372	1.3	228.98	3.0	12.0	12.0	22.0			
	4.9	1029	0.9	184.51	6.0	12.0	11.0	19.0	PKD 2390 80M6B	48	222-223
	5.3	947	1.0	169.88	6.0	12.0	11.0	19.0			
	6.5	768	1.2	137.63	8.0	12.0	12.0	18.0			
	7.8	646	1.4	115.77	8.0	12.0	12.0	18.0			
	9.1	552	1.6	98.92	9.0	12.0	12.0	17.0			
	10.6	475	1.9	85.23	9.0	12.0	12.0	17.0			
	11.4	440	2.1	78.85	5.0	12.0	12.0	16.0			
	13.5	371	2.4	66.47	5.0	12.0	12.0	16.0			
	15.5	325	2.8	58.24	5.0	12.0	12.0	15.0			
	6.4	774	1.1	219.34	3.0	12.0	9.0	20.0	PKD 2390 80M4B / 80M4C	48	222-223
	7.6	651	1.3	184.51	6.0	12.0	11.0	19.0			
	8.2	599	1.4	169.88	6.0	12.0	11.0	19.0			
	10.2	485	1.8	137.63	8.0	12.0	12.0	18.0			
	12.1	408	2.1	115.77	8.0	12.0	12.0	18.0			
	14.2	349	2.5	98.92	9.0	12.0	12.0	17.0			
	16.4	301	2.9	85.23	9.0	12.0	12.0	17.0			
	10.1	467	1.3	276.87	3.0	12.0	10.0	22.0	PKD 2390 71M2B	46	222-223
	12.0	393	1.4	232.89	3.0	12.0	11.0	21.0			
	12.8	370	1.8	219.34	3.0	12.0	9.0	20.0			
	15.2	311	2.1	184.51	6.0	12.0	11.0	19.0			
	16.5	286	2.3	169.88	6.0	12.0	11.0	19.0			
	7.6	598	0.8	367.72	7.0	20.0	-	-	PKD G 1490 71M2B	44	218-219
	10.5	436	1.1	267.91	7.0	20.0	-	-			
	11.9	384	1.2	235.95	7.0	20.0	-	-			
	15.7	290	1.5	178.17	7.0	20.0	-	-			
	20.8	219	1.5	134.41	7.0	20.0	-	-			

P_1 [kW]	n_2 [Min^{-1}]	M_2 [Nm]	f_B	i_{ges}	F_R [N]	F_A [N]	$F_{R\,GR}$ [N]	$F_{A\,GR}$ [N]	Tip / Type / Typ IE2 / IE3	Kg	mm
0.55	6.0	836	0.8	149.85	8.0	20.0	-	-	PKD G 1390 80M6B	41	214-215
	6.3	795	0.8	142.45	8.0	20.0	9.0	20.0			
	7.7	650	1.0	116.55	9.0	20.0	9.0	20.0			
	9.8	512	1.0	91.88	9.0	20.0	9.0	20.0			
	11.1	454	1.4	81.40	9.0	20.0	9.0	20.0			
	12.5	401	1.6	71.94	9.0	20.0	9.0	20.0			
	14.0	357	1.8	64.06	9.0	20.0	9.0	20.0			
	17.2	292	2.2	52.42	8.0	20.0	9.0	20.0			
	19.5	257	2.5	46.16	8.0	20.0	9.0	20.0			
	22.0	228	2.8	40.87	8.0	20.0	9.0	20.0			
	7.6	646	0.9	183.15	6.0	20.0	9.0	20.0	PKD G 1390 80M4B / 80M4C	41	214-215
	9.3	528	1.2	149.85	8.0	20.0	9.0	20.0			
	9.8	502	1.2	142.45	8.0	20.0	9.0	20.0			
	12.0	411	1.5	116.55	9.0	20.0	9.0	20.0			
	15.2	324	1.5	91.88	9.0	20.0	9.0	20.0			
	17.2	287	2.1	81.40	9.0	20.0	9.0	20.0			
	19.5	254	2.4	71.94	9.0	20.0	9.0	20.0			
	21.9	226	2.7	64.06	9.0	20.0	9.0	20.0			
	10.1	468	1.0	277.79	6.0	20.0	-	-	PKD G 1390 71M2B	39	214-215
	11.9	395	1.1	234.59	6.0	20.0	9.0	20.0			
	13.6	347	1.3	206.01	6.0	20.0	9.0	20.0			
	15.3	309	1.5	183.15	6.0	20.0	-	-			
	18.7	253	1.8	149.85	8.0	20.0	-	-			
	19.7	240	1.9	142.45	8.0	20.0	-	-			
	24.0	196	2.4	116.55	9.0	20.0	-	-			
	30.5	155	2.5	91.88	9.0	20.0	-	-			
	13.1	347	0.9	213.26	5.0	20.0	-	-	PKD 1490 71M2B	43	210-211
	15.7	290	1.0	178.17	5.0	20.0	-	-			
	19.8	230	1.3	141.69	5.0	20.0	-	-			
	9.2	543	0.8	97.43	5.0	20.0	8.0	20.0	PKD 1390 80M6B	40	206-207
	10.5	480	0.9	86.12	6.0	20.0	9.0	20.0			
	11.7	428	1.0	76.68	6.0	20.0	9.0	20.0			
	14.3	350	1.2	62.74	7.0	20.0	9.0	20.0			
	16.3	308	1.4	55.26	6.0	20.0	9.0	20.0			
	18.4	273	1.5	48.92	6.0	20.0	9.0	20.0			
	21.6	233	1.8	41.72	6.0	20.0	9.0	20.0			
	25.8	194	2.2	34.86	6.0	20.0	9.0	20.0			
	28.6	176	2.4	31.48	6.0	20.0	9.0	20.0			
	32.5	155	2.7	27.72	6.0	20.0	9.0	20.0			
	12.7	388	1.0	109.98	5.0	20.0	8.0	20.0	PKD 1390 80M4B / 80M4C	40	206-207
	14.4	344	1.2	97.43	5.0	20.0	8.0	20.0			
	16.3	304	1.3	86.12	6.0	20.0	9.0	20.0			
	18.3	270	1.5	76.68	6.0	20.0	9.0	20.0			
	22.3	221	1.8	62.74	7.0	20.0	9.0	20.0			
	13.6	347	0.9	206.01	5.0	20.0	9.0	20.0	PKD 1390 71M2B	38	206-207
	15.3	309	1.0	183.15	5.0	20.0	9.0	20.0			
	16.8	281	1.1	166.82	5.0	20.0	9.0	20.0			
	19.9	237	1.3	140.87	5.0	20.0	9.0	20.0			
	22.6	209	1.5	123.71	5.0	20.0	9.0	20.0			
	25.5	185	1.6	109.98	5.0	20.0	8.0	20.0			
	28.7	164	1.9	97.43	5.0	20.0	8.0	20.0			
	32.5	145	2.1	86.12	6.0	20.0	9.0	20.0			
	36.5	129	2.4	76.68	6.0	20.0	9.0	20.0			
	44.6	106	2.9	62.74	7.0	20.0	9.0	20.0			
	14.1	362	1.3	63.96	7.9	12.0	-	-	PKD H 5290 80M6B	49	202-203
	16.1	317	1.3	55.96	8.0	12.0	-	-			
	17.2	297	2.0	52.42	8.0	12.0	-	-			
	19.6	260	2.0	45.86	7.9	12.0	-	-			
	22.1	231	2.0	40.77	7.9	12.0	-	-			
	21.9	230	2.0	63.96	7.9	12.0	-	-	PKD H 5290 80M4B / 80M4C	49	202-203
	25.0	202	2.0	55.96	8.0	12.0	-	-			
	26.7	189	3.0	52.42	8.0	12.0	-	-			

P_1 [kW]	n_2 [Min^{-1}]	M_2 [Nm]	f_B	i_{ges}	F_R [N]	F_A [N]	$F_{R\,GR}$ [N]	$F_{A\,GR}$ [N]	Tip / Type / Typ IE2 / IE3	Kg	mm
0.55	15.2	335	1.2	59.20	5.5	12.0	-	-	PKD F 4290 80M6B	37	198-199
	17.4	293	1.2	51.80	5.7	12.0	-	-			
	18.7	272	1.4	48.01	5.8	12.0	-	-			
	21.4	238	1.5	42.01	5.9	12.0	-	-			
	24.1	211	1.6	37.34	5.9	12.0	-	-			
	26.4	193	2.1	34.15	6.1	12.0	-	-			
	30.1	169	2.1	29.88	6.1	12.0	-	-			
	33.9	150	2.3	26.56	6.1	12.0	-	-			
	23.6	213	1.8	59.20	5.5	12.0	-	-	PKD F 4290 80M4B / 80M4C	37	198-199
	27.0	187	1.8	51.80	5.7	12.0	-	-			
	29.2	173	2.2	48.01	5.8	12.0	-	-			
	33.3	151	2.2	42.01	5.9	12.0	-	-			
	37.5	134	2.5	37.34	5.9	12.0	-	-			
	47.3	103	2.8	59.20	5.5	12.0	-	-	PKD F 4290 71M2B	35	198-199
	54.1	90	2.9	51.80	5.7	12.0	-	-			
	23.3	219	0.9	38.59	4.2	9.0	-	-	PKD C 1290 80M6B	28	194-195
	26.7	191	1.0	33.76	4.3	9.0	-	-			
	28.8	177	1.1	31.27	4.4	9.0	-	-			
	32.9	155	1.6	27.36	4.5	9.0	-	-			
	37.0	138	1.6	24.32	4.5	9.0	-	-			
	41.0	124	1.6	21.94	4.1	9.0	-	-			
	46.9	109	2.2	19.19	4.1	9.0	-	-			
	52.8	97	2.5	17.06	4.1	9.0	-	-			
	61.4	83	2.4	14.66	4.1	9.0	-	-			
	69.3	74	2.8	12.99	4.1	9.0	-	-			
	28.2	179	0.9	49.69	3.8	9.0	-	-	PKD C 1290 80M4B / 80M4C	28	194-195
	32.2	157	1.0	43.48	4.1	9.0	-	-			
	36.3	139	1.4	38.59	4.2	9.0	-	-			
	41.5	122	1.5	33.76	4.3	9.0	-	-			
	44.8	113	1.7	31.27	4.4	9.0	-	-			
	51.2	99	2.3	27.36	4.5	9.0	-	-			
	57.6	88	2.4	24.32	4.5	9.0	-	-			
	63.8	79	2.5	21.94	4.1	9.0	-	-			
	44.6	110	0.9	62.77	3.8	9.0	-	-	PKD C 1290 71M2B	26	194-195
	51.0	96	0.9	54.92	3.8	9.0	-	-			
	56.3	87	1.5	49.69	3.8	9.0	-	-			
	64.4	76	1.5	43.48	4.1	9.0	-	-			
	72.6	67	2.1	38.59	4.2	9.0	-	-			
	82.9	59	2.4	33.76	4.3	9.0	-	-			
	31.9	160	0.8	28.21	2.7	5.6	-	-	PKD B 0290 80M6B	21	190-191
	34.6	147	0.9	25.99	2.8	5.6	-	-			
	39.6	129	1.0	22.74	3.0	5.6	-	-			
	47.8	107	0.8	18.81	3.1	5.6	-	-			
	57.6	88	1.4	15.62	3.2	5.6	-	-			
	66.8	76	1.7	13.48	3.3	5.6	-	-			
	76.3	67	1.8	11.79	3.3	5.6	-	-			
	87.0	59	2.0	10.35	3.3	5.6	-	-			
	99.3	51	2.1	9.06	2.7	5.6	-	-			
	112.5	45	2.3	8.00	2.7	5.6	-	-			
	127.7	40	2.5	7.05	2.7	5.6	-	-			
	149.0	34	2.8	6.04	2.7	5.6	-	-			
	168.5	30	3.0	5.34	2.7	5.6	-	-			
	34.0	148	0.8	41.23	-	-	-	-	PKD B 0290 80M4B / 80M4C	21	190-191
	38.8	130	0.8	36.08	2.9	5.6	-	-			
	43.4	116	1.0	32.24	2.5	5.6	-	-			
	49.6	102	1.2	28.21	2.7	5.6	-	-			
	53.9	94	1.3	25.99	2.8	5.6	-	-			
	61.6	82	1.5	22.74	3.0	5.6	-	-			
	74.4	68	1.3	18.81	3.1	5.6	-	-			
	89.6	56	2.1	15.62	3.2	5.6	-	-			
	103.9	49	2.5	13.48	3.3	5.6	-	-			
	118.7	42	2.7	11.79	3.3	5.6	-	-			
	135.3	37	3.0	10.35	3.3	5.6	-	-			

P_1 [kW]	n_2 [Min^{-1}]	M_2 [Nm]	f_B	i_{ges}	F_R [N]	F_A [N]	$F_{R\,GR}$ [N]	$F_{A\,GR}$ [N]	Tip / Type / Typ IE2 / IE3	Kg	mm
0.55	67.9	72	1.2	41.23	2.9	5.6	-	-	PKD B 0290 71M2B	19	190-191
	77.6	63	1.2	36.08	2.9	5.6	-	-			
	86.8	56	1.6	32.24	2.5	5.6	-	-			
	99.3	49	1.9	28.21	2.7	5.6	-	-			
	148.9	33	2.0	18.81	3.1	5.6	-	-			
	44.2	115	0.8	20.35	2.9	5.1	-	-	PKD A 0290 80M6B	17	186-187
	66.3	77	1.0	13.57	3.1	5.1	-	-			
	81.4	63	1.5	11.05	3.2	5.1	-	-			
	93.1	55	1.7	9.67	3.2	5.1	-	-			
	100.1	51	1.9	8.99	3.2	5.1	-	-			
	114.5	45	2.1	7.86	2.6	5.1	-	-			
	139.5	37	2.4	6.45	2.6	5.1	-	-			
	155.7	33	2.6	5.78	2.6	5.1	-	-			
	171.8	30	2.8	5.24	2.6	5.1	-	-			
	53.1	95	0.9	26.36	2.7	5.1	-	-	PKD A 0290 80M4B / 80M4C	17	186-187
	60.2	84	1.1	23.26	-	-	-	-			
	68.8	73	1.2	20.35	2.9	5.1	-	-			
	79.6	63	0.9	17.58	3.0	5.1	-	-			
	103.2	49	1.5	13.57	3.1	5.1	-	-			
	126.7	40	2.3	11.05	3.2	5.1	-	-			
	144.8	35	2.6	9.67	3.2	5.1	-	-			
	155.7	32	2.8	8.99	3.2	5.1	-	-			
	70.6	69	0.9	39.64	2.7	5.1	-	-	PKD A 0290 71M2B	15	186-187
	80.7	61	0.9	34.69	2.7	5.1	-	-			
	92.9	53	1.0	30.13	2.7	5.1	-	-			
	106.2	46	1.5	26.36	2.7	5.1	-	-			
	120.4	41	1.7	23.26	2.9	5.1	-	-			
	137.6	36	1.9	20.35	2.9	5.1	-	-			
	159.3	31	1.5	17.58	3.0	5.1	-	-			
	206.3	24	2.4	13.57	3.1	5.1	-	-			
0.75	0.1	60376	0.9	8306.57	-	-	-	-	PKD G 9390/63 90S6B / 90L6C	1788	282
	0.1	57001	0.9	7842.34	-	-	-	-			
	0.1	48746	1.1	6706.55	-	-	-	-			
	0.2	40526	1.3	5575.65	-	-	-	-			
	0.2	32282	1.6	4441.42	-	-	-	-			
	0.2	26838	2.0	3692.48	-	-	-	-			
	0.3	23332	2.3	3210.12	-	-	-	-			
	0.3	19473	2.7	2679.06	-	-	-	-			
	0.2	36404	0.9	4933.39	152.0	70.0	-	-	PKD 9390/52 90S6B / 90L6C	1490	280
	0.3	26236	1.0	3555.41	152.0	70.0	-	-			
	0.3	21499	1.3	2913.46	152.0	70.0	-	-			
	0.4	15602	2.2	2114.30	152.0	70.0	-	-			
	0.5	13246	2.5	1795.13	152.0	70.0	-	-			
	0.2	26592	0.8	3603.72	120.0	65.0	-	-	PKD G 8390/52 90S6B / 90L6C	920	280
	0.3	22277	0.9	3018.87	120.0	65.0	-	-			
	0.4	15600	1.3	2114.13	120.0	65.0	-	-			
	0.5	13183	1.6	1786.51	120.0	65.0	-	-			
	0.6	10797	1.9	1463.24	120.0	65.0	120.0	65.0			
	0.7	8882	2.4	1203.73	120.0	65.0	120.0	65.0			
	0.4	15104	0.9	2046.84	95.0	60.0	-	-	PKD 8390/42 90S6B / 90L6C	645	280
	0.5	13371	1.0	1812.03	95.0	60.0	-	-			
	0.6	10829	1.3	1467.49	95.0	60.0	95.0	60.0			
	0.9	7512	1.8	1017.96	95.0	60.0	95.0	60.0			
	1.1	6238	2.2	845.40	95.0	60.0	95.0	60.0			
	1.3	5202	2.6	705.03	95.0	60.0	95.0	60.0			
	0.6	10687	0.8	1448.34	56.0	50.0	66.0	50.0	PKD 7390/32 90S6B / 90L6C	368	278
	0.8	8606	1.0	1166.22	60.0	50.0	66.0	50.0			
	0.9	7176	1.2	972.42	62.0	50.0	66.0	50.0			
	1.2	5646	1.6	765.14	63.0	50.0	66.0	50.0			
	1.5	4399	2.0	596.10	61.0	50.0	66.0	50.0			
	1.9	3475	2.6	470.91	61.0	50.0	66.0	50.0			

P_1 [kW]	n_2 [Min^{-1}]	M_2 [Nm]	f_B	i_{ges}	F_R [N]	F_A [N]	$F_{R\,GR}$ [N]	$F_{A\,GR}$ [N]	Tip / Type / Typ IE2 / IE3	Kg	mm
0.75	0.6	10649	0.8	2312.67	-	-	-	-	PKD 7390/32 80M4C / 80M4D	364	278
	0.7	8791	1.0	1909.17	-	-	-	-			
	1.0	6669	1.3	1448.34	56.0	50.0	66.0	50.0			
	1.2	5370	1.6	1166.22	60.0	50.0	66.0	50.0			
	1.4	4477	1.9	972.42	62.0	50.0	66.0	50.0			
	1.8	3523	2.4	765.14	63.0	50.0	66.0	50.0			
	0.9	6945	0.9	3244.21	56.0	50.0	-	-	PKD 7390/32 80M2B / 80M2C	364	278
	1.2	4951	1.3	2312.67	56.0	50.0	-	-			
	1.5	4087	1.6	1909.17	56.0	50.0	-	-			
	1.9	3100	2.1	1448.34	56.0	50.0	66.0	50.0			
	2.4	2496	2.6	1166.22	60.0	50.0	66.0	50.0			
	0.6	10248	0.8	1388.82	57.0	50.0	66.0	50.0	PKD 6390/32 90S6B / 90L6C	368	278
	0.8	8252	1.0	1118.29	60.0	50.0	66.0	50.0			
	1.0	6881	1.3	932.46	62.0	50.0	66.0	50.0			
	1.2	5414	1.6	733.69	63.0	50.0	66.0	50.0			
	1.6	4218	2.0	571.60	61.0	50.0	66.0	50.0			
	2.0	3332	2.6	451.55	61.0	50.0	66.0	50.0			
	0.6	10211	0.8	2217.63	-	-	-	-	PKD 6390/32 80M4C / 80M4D	364	278
	0.8	8429	1.0	1830.71	-	-	-	-			
	1.0	6395	1.3	1388.82	57.0	50.0	66.0	50.0			
	1.3	5149	1.6	1118.29	60.0	50.0	66.0	50.0			
	1.5	4293	1.9	932.46	62.0	50.0	66.0	50.0			
	1.9	3378	2.4	733.69	63.0	50.0	66.0	50.0			
	0.7	8270	0.8	3863.44	57.0	50.0	-	-	PKD 6390/32 80M2B / 80M2C	364	278
	0.9	6659	0.9	3110.88	57.0	50.0	-	-			
	1.3	4747	1.3	2217.63	57.0	50.0	-	-			
	1.5	3919	1.6	1830.71	57.0	50.0	-	-			
	2.0	2973	2.1	1388.82	57.0	50.0	66.0	50.0			
	2.5	2394	2.6	1118.29	60.0	50.0	66.0	50.0			
	1.3	5272	1.0	703.71	33.0	45.0	38.0	45.0	PKD 5490 90S6B / 90L6C	212	250-251
	1.6	4349	1.2	580.56	35.0	45.0	38.0	45.0			
	2.0	3439	1.5	459.05	36.0	45.0	38.0	45.0			
	2.6	2613	1.9	348.85	37.0	45.0	38.0	45.0			
	3.4	1983	2.5	264.64	24.0	45.0	38.0	45.0			
	3.9	1715	2.9	228.99	24.0	45.0	38.0	45.0			
	1.3	4998	1.0	1061.93	23.0	45.0	38.0	45.0	PKD 5490 80M4C / 80M4D	208	250-251
	1.5	4382	1.1	931.06	28.0	45.0	38.0	45.0			
	2.0	3312	1.4	703.71	33.0	45.0	38.0	45.0			
	2.4	2733	1.8	580.56	35.0	45.0	38.0	45.0			
	3.0	2161	2.2	459.05	36.0	45.0	38.0	45.0			
	4.0	1642	2.9	348.85	37.0	45.0	38.0	45.0			
	1.4	4488	0.8	2023.36	23.0	45.0	-	-	PKD 5490 80M2B / 80M2C	208	250-251
	1.5	4158	0.9	1874.35	23.0	45.0	-	-			
	2.0	3105	1.2	1399.82	23.0	45.0	38.0	45.0			
	2.6	2356	1.5	1061.93	23.0	45.0	38.0	45.0			
	3.0	2065	1.8	931.06	28.0	45.0	38.0	45.0			
	4.0	1561	1.9	703.71	33.0	45.0	38.0	45.0			
	4.8	1288	2.8	580.56	35.0	45.0	38.0	45.0			
	3.1	2203	2.3	289.62	37.0	45.0	38.0	45.0	PKD 5390 90S6B / 90L6C	194	246-247
	3.6	1881	2.7	247.36	37.0	45.0	38.0	45.0			
	2.2	3031	1.0	404.53	27.0	40.0	28.0	31.0	PKD 4490 90S6B / 90L6C	134	242-243
	2.6	2625	1.1	350.42	26.0	40.0	28.0	35.0			
	3.2	2090	1.4	278.98	27.0	40.0	28.0	33.0			
	4.4	1529	1.9	204.13	27.0	40.0	28.0	31.0			
	5.2	1289	2.3	172.07	19.0	40.0	28.0	30.0			
	2.2	3035	0.9	644.73	18.0	40.0	28.0	37.0	PKD 4490 80M4C / 80M4D	130	242-243
	2.5	2673	1.0	567.85	21.0	40.0	28.0	37.0			
	4.0	1649	1.7	350.42	26.0	40.0	28.0	35.0			
	5.0	1313	2.1	278.98	27.0	40.0	28.0	33.0			
	6.9	961	2.9	204.13	27.0	40.0	28.0	31.0			

P_1 [kW]	n_2 [Min^{-1}]	M_2 [Nm]	f_B	i_{ges}	F_R [N]	F_A [N]	$F_{R\,GR}$ [N]	$F_{A\,GR}$ [N]	Tip / Type / Typ IE2 / IE3	Kg	mm
0.75	2.5	2471	0.9	1113.75	18.0	40.0	28.0	40.0	PKD 4490 80M2B / 80M2C	130	242-243
	3.2	1957	1.1	882.35	18.0	40.0	28.0	40.0			
	4.3	1430	1.5	644.73	18.0	40.0	28.0	37.0			
	4.9	1260	1.7	567.85	21.0	40.0	28.0	37.0			
	8.0	777	2.7	350.42	26.0	40.0	28.0	35.0			
	2.7	2507	1.2	329.57	28.0	40.0	28.0	31.0	PKD 4390 90S6B / 90L6C	119	238-239
	3.3	2082	1.4	273.80	28.0	40.0	28.0	30.0			
	3.8	1786	1.6	234.83	28.0	40.0	28.0	30.0			
	4.6	1484	2.0	195.09	28.0	40.0	28.0	29.0			
	5.4	1258	1.3	165.34	28.0	40.0	28.0	28.0			
	7.6	896	2.8	117.81	28.0	40.0	28.0	26.0			
	3.4	2006	0.8	267.79	14.0	15.0	15.0	23.0	PKD 3490 90S6B / 90L6C	80	234-235
	4.2	1612	1.0	215.12	15.0	15.0	15.0	22.0			
	5.4	1255	1.3	167.59	15.0	15.0	15.0	21.0			
	3.5	1880	0.8	399.39	8.0	15.0	15.0	25.0	PKD 3490 80M4C / 80M4D	76	234-235
	4.0	1661	0.9	353.00	1.0	15.0	14.0	20.0			
	5.2	1260	1.2	267.79	14.0	15.0	15.0	23.0			
	6.5	1013	1.5	215.12	15.0	15.0	15.0	22.0			
	8.4	789	2.0	167.59	15.0	15.0	15.0	21.0			
	7.0	886	1.3	399.39	8.0	15.0	15.0	23.0	PKD 3490 80M2B / 80M2C	76	234-235
	7.9	783	1.5	353.00	1.0	15.0	15.0	22.0			
	10.5	594	2.0	267.79	14.0	15.0	12.0	17.0			
	13.0	477	2.5	215.12	15.0	15.0	12.0	17.0			
	3.6	1901	0.9	250.01	11.0	15.0	15.0	19.0	PKD 3390 90S6B / 90L6C	72	230-231
	3.8	1781	0.9	234.13	11.0	15.0	15.0	19.0			
	4.6	1504	1.1	197.69	13.0	15.0	15.0	18.0			
	4.8	1432	1.1	188.22	14.0	15.0	15.0	16.0			
	5.7	1209	1.3	158.92	14.0	15.0	15.0	16.0			
	6.5	1061	1.5	139.49	14.0	15.0	15.0	16.0			
	7.6	896	1.8	117.78	14.0	15.0	15.0	15.0			
	8.1	844	1.9	110.94	14.0	15.0	15.0	17.0			
	9.6	712	2.3	93.67	12.0	15.0	15.0	16.0			
	10.7	640	2.5	84.16	12.0	15.0	15.0	16.0			
	11.9	577	2.8	75.92	12.0	15.0	15.0	15.0			
	4.7	1424	1.1	296.10	8.0	15.0	15.0	19.0	PKD 3390 80M4C / 80M4D	68	230-231
	5.6	1202	1.3	250.01	11.0	15.0	15.0	19.0			
	6.0	1126	1.4	234.13	11.0	15.0	15.0	19.0			
	7.1	951	1.6	197.69	13.0	15.0	15.0	18.0			
	12.6	534	2.9	110.94	14.0	15.0	15.0	17.0			
	9.5	681	1.7	296.10	8.0	15.0	15.0	19.0	PKD 3390 80M2B / 80M2C	68	230-231
	11.2	575	2.0	250.01	11.0	15.0	15.0	19.0			
	12.0	538	2.2	234.13	11.0	15.0	15.0	19.0			
	14.2	454	2.6	197.69	13.0	15.0	15.0	18.0			
	9.1	752	1.2	98.92	8.0	12.0	12.0	16.0	PKD 2390 90S6B / 90L6C	52	222-223
	11.4	600	1.5	78.85	8.0	12.0	12.0	16.0			
	13.5	506	1.8	66.47	9.0	12.0	12.0	15.0			
	15.5	443	2.0	58.24	3.0	12.0	12.0	15.0			
	17.3	396	2.3	52.11	3.0	12.0	12.0	14.0			
	18.4	373	2.4	48.99	3.0	12.0	12.0	14.0			
	20.1	341	2.7	44.80	3.0	12.0	12.0	14.0			
	22.7	302	3.0	39.70	3.0	12.0	12.0	13.0			
	6.4	1055	0.8	219.34	0.2	12.0	4.0	18.0	PKD 2390 80M4C / 80M4D	48	222-223
	7.6	887	1.0	184.51	0.4	12.0	8.0	18.0			
	8.2	817	1.1	169.88	0.4	12.0	9.0	18.0			
	10.2	662	1.3	137.63	5.0	12.0	10.0	17.0			
	12.1	557	1.5	115.77	7.0	12.0	11.0	17.0			
	14.2	476	1.8	98.92	8.0	12.0	12.0	16.0			
	16.4	410	2.1	85.23	8.0	12.0	12.0	16.0			
	17.8	379	2.3	78.85	8.0	12.0	12.0	16.0			
	21.1	320	2.7	66.47	9.0	12.0	12.0	15.0			

P_1 [kW]	n_2 [Min^{-1}]	M_2 [Nm]	f_B	i_{ges}	F_R [N]	F_A [N]	$F_{R\,GR}$ [N]	$F_{A\,GR}$ [N]	Tip / Type / Typ IE2 / IE3	Kg	mm
0.75	12.8	504	1.3	219.34	2.0	12.0	4.0	18.0	PKD 2390 80M2B / 80M2C	48	222-223
	15.2	424	1.5	184.51	4.0	12.0	8.0	18.0			
	16.5	391	1.7	169.88	4.0	12.0	9.0	18.0			
	20.3	316	2.1	137.63	5.0	12.0	10.0	17.0			
	24.2	266	2.5	115.77	7.0	12.0	11.0	17.0			
	28.3	227	2.9	98.92	8.0	12.0	12.0	16.0			
	11.1	619	1.0	81.40	9.0	20.0	9.0	20.0	PKD G 1390 90S6B / 90L6C	45	214-215
	12.5	547	1.2	71.94	9.0	20.0	9.0	20.0			
	14.0	487	1.3	64.06	9.0	20.0	9.0	20.0			
	17.2	399	1.6	52.42	9.0	20.0	9.0	20.0			
	19.5	351	1.8	46.16	9.0	20.0	9.0	20.0			
	22.0	311	2.0	40.87	6.0	20.0	9.0	20.0			
	25.8	265	2.4	34.86	6.0	20.0	9.0	20.0			
	29.6	232	2.7	30.44	6.0	20.0	9.0	20.0			
	9.3	721	0.8	149.85	5.0	20.0	9.0	20.0	PKD G 1390 80M4C / 80M4D	41	214-215
	9.8	685	0.9	142.45	6.0	20.0	9.0	20.0			
	12.0	561	1.1	116.55	6.0	20.0	9.0	20.0			
	15.2	442	1.1	91.88	8.0	20.0	9.0	20.0			
	17.2	391	1.5	81.40	9.0	20.0	9.0	20.0			
	19.5	346	1.7	71.94	9.0	20.0	9.0	20.0			
	21.9	308	2.0	64.06	9.0	20.0	9.0	20.0			
	26.7	252	2.4	52.42	9.0	20.0	9.0	20.0			
	30.3	222	2.7	46.16	9.0	20.0	9.0	20.0			
	15.3	421	1.1	183.15	5.0	20.0	9.0	20.0	PKD G 1390 80M2B / 80M2C	41	214-215
	18.7	344	1.3	149.85	5.0	20.0	9.0	20.0			
	19.7	327	1.4	142.45	6.0	20.0	9.0	20.0			
	24.0	268	1.7	116.55	6.0	20.0	9.0	20.0			
	30.5	211	1.8	91.88	8.0	20.0	9.0	20.0			
	34.4	187	2.4	81.40	9.0	20.0	9.0	20.0			
	38.9	165	2.8	71.94	9.0	20.0	9.0	20.0			
	14.3	477	0.9	62.74	6.0	20.0	9.0	20.0	PKD 1390 90S6B / 90L6C	44	206-207
	16.3	420	1.0	55.26	6.0	20.0	9.0	20.0			
	18.4	372	1.1	48.92	7.0	20.0	9.0	20.0			
	21.6	317	1.3	41.72	7.0	20.0	9.0	20.0			
	25.8	265	1.6	34.86	5.0	20.0	9.0	20.0			
	28.6	239	1.8	31.48	5.0	20.0	9.0	20.0			
	32.5	211	2.0	27.72	5.0	20.0	9.0	20.0			
	36.7	187	2.2	24.55	5.0	20.0	9.0	20.0			
	43.0	159	2.6	20.93	5.0	20.0	9.0	19.0			
	51.5	133	3.0	17.49	5.0	20.0	9.0	18.0			
	73.3	93	2.5	12.27	5.0	20.0	9.0	17.0			
	82.9	83	2.5	10.86	5.0	20.0	9.0	16.0			
	97.2	70	2.9	9.26	5.0	20.0	9.0	15.0			
	12.7	529	0.8	109.98	5.0	20.0	8.0	20.0	PKD 1390 80M4C / 80M4D	40	206-207
	14.4	469	0.9	97.43	3.0	20.0	8.0	20.0			
	16.3	414	1.0	86.12	4.0	20.0	8.0	20.0			
	18.3	369	1.1	76.68	5.0	20.0	9.0	20.0			
	22.3	302	1.3	62.74	6.0	20.0	9.0	20.0			
	25.3	266	1.5	55.26	6.0	20.0	9.0	20.0			
	28.6	235	1.7	48.92	7.0	20.0	9.0	20.0			
	33.6	201	2.0	41.72	7.0	20.0	9.0	20.0			
	25.5	253	1.2	109.98	5.0	20.0	8.0	20.0	PKD 1390 80M2B / 80M2C	40	206-207
	28.7	224	1.4	97.43	3.0	20.0	8.0	20.0			
	32.5	198	1.5	86.12	4.0	20.0	8.0	20.0			
	36.5	176	1.7	76.68	5.0	20.0	9.0	20.0			
	44.6	144	2.1	62.74	6.0	20.0	9.0	20.0			
	50.7	127	2.4	55.26	6.0	20.0	9.0	20.0			
	57.2	112	2.7	48.92	7.0	20.0	9.0	20.0			
	17.2	405	1.5	52.42	7.8	12.0	-	-	PKD H 5290 90S6B / 90L6C	53	202-203
	19.6	354	1.5	45.86	7.9	12.0	-	-			
	22.1	315	1.5	40.77	8.0	12.0	-	-			
	24.6	283	2.5	36.59	7.9	12.0	-	-			
	28.1	247	2.7	32.02	7.9	12.0	-	-			
	31.6	220	2.9	28.46	7.9	12.0	-	-			

P_1 [kW]	n_2 [Min^{-1}]	M_2 [Nm]	f_B	i_{ges}	F_R [N]	F_A [N]	$F_{R\,GR}$ [N]	$F_{A\,GR}$ [N]	Tip / Type / Typ IE2 / IE3	Kg	mm
0.75	21.9	314	1.5	63.96	7.5	12.0	-	-	PKD H 5290 80M4C / 80M4D	49	202-203
	25.0	275	1.5	55.96	7.7	12.0	-	-			
	26.7	257	2.2	52.42	7.8	12.0	-	-			
	30.5	225	2.2	45.86	7.9	12.0	-	-			
	34.3	200	2.2	40.77	8.0	12.0	-	-			
	43.8	152	2.3	63.96	7.5	12.0	-	-	PKD H 5290 80M2B / 80M2C	49	202-203
	50.0	133	2.3	55.96	7.7	12.0	-	-			
	18.7	371	1.1	48.01	5.4	12.0	-	-	PKD F 4290 90S6B / 90L6C	41	198-199
	21.4	324	1.1	42.01	5.6	12.0	-	-			
	24.1	288	1.2	37.34	5.7	12.0	-	-			
	26.4	264	1.5	34.15	5.3	12.0	-	-			
	30.1	231	1.5	29.88	5.5	12.0	-	-			
	33.9	205	1.7	26.56	5.7	12.0	-	-			
	23.6	291	1.3	59.20	4.9	12.0	-	-	PKD F 4290 80M4C / 80M4D	37	198-199
	27.0	254	1.4	51.80	5.3	12.0	-	-			
	29.2	236	1.6	48.01	5.4	12.0	-	-			
	33.3	206	1.6	42.01	5.6	12.0	-	-			
	37.5	183	1.8	37.34	5.7	12.0	-	-			
	41.0	168	2.3	34.15	5.3	12.0	-	-			
	46.9	147	2.3	29.88	5.5	12.0	-	-			
	52.7	130	2.5	26.56	5.7	12.0	-	-			
	47.3	141	2.0	59.20	4.9	12.0	-	-	PKD F 4290 80M2B / 80M2C	37	198-199
	54.1	123	2.1	51.80	5.3	12.0	-	-			
	58.3	114	2.5	48.01	5.4	12.0	-	-			
	66.7	100	2.6	42.01	5.6	12.0	-	-			
	75.0	89	2.8	37.34	5.7	12.0	-	-			
	28.8	241	0.8	31.27	4.1	9.0	-	-	PKD C 1290 90S6B / 90L6C	32	194-195
	32.9	211	1.1	27.36	4.2	9.0	-	-			
	37.0	188	1.2	24.32	4.4	9.0	-	-			
	41.0	169	1.2	21.94	4.1	9.0	-	-			
	46.9	148	1.6	19.19	4.2	9.0	-	-			
	52.8	132	1.8	17.06	4.3	9.0	-	-			
	61.4	113	1.8	14.66	4.6	9.0	-	-			
	69.3	100	2.0	12.99	3.8	9.0	-	-			
	79.2	88	2.3	11.37	3.8	9.0	-	-			
	83.3	83	2.3	10.81	3.8	9.0	-	-			
	95.0	73	2.5	9.47	3.8	9.0	-	-			
	108.6	64	2.9	8.29	3.8	9.0	-	-			
	36.3	190	1.0	38.59	3.7	9.0	-	-	PKD C 1290 80M4C / 80M4D	28	194-195
	41.5	166	1.1	33.76	4.0	9.0	-	-			
	44.8	154	1.2	31.27	4.1	9.0	-	-			
	51.2	134	1.7	27.36	4.2	9.0	-	-			
	57.6	119	1.8	24.32	4.4	9.0	-	-			
	63.8	108	1.8	21.94	4.1	9.0	-	-			
	73.0	94	2.4	19.19	4.2	9.0	-	-			
	82.1	84	2.7	17.06	4.3	9.0	-	-			
	95.5	72	2.6	14.66	4.6	9.0	-	-			
	56.3	118	1.1	49.69	3.7	9.0	-	-	PKD C 1290 80M2B / 80M2C	28	194-195
	64.4	104	1.1	43.48	3.7	9.0	-	-			
	72.6	92	1.6	38.59	3.7	9.0	-	-			
	82.9	80	1.7	33.76	4.0	9.0	-	-			
	89.5	74	1.9	31.27	4.1	9.0	-	-			
	102.3	65	2.7	27.36	4.2	9.0	-	-			
	115.1	58	2.8	24.32	4.4	9.0	-	-			
	127.6	52	2.8	21.94	4.1	9.0	-	-			
	57.6	121	1.0	15.62	3.0	5.6	-	-	PKD B 0290 90S6B / 90L6C	25	190-191
	66.8	104	1.2	13.48	3.1	5.6	-	-			
	76.3	91	1.3	11.79	3.2	5.6	-	-			
	87.0	80	1.4	10.35	3.3	5.6	-	-			
	99.3	70	1.6	9.06	3.3	5.6	-	-			
	112.5	62	1.7	8.00	3.3	5.6	-	-			
	127.7	54	1.8	7.05	3.3	5.6	-	-			
	149.0	47	2.0	6.04	2.5	5.4	-	-			
	168.5	41	2.2	5.34	2.9	5.6	-	-			
	188.7	37	2.3	4.77	2.9	5.6	-	-			
	219.0	32	2.5	4.11	2.9	5.6	-	-			

P_1 [kW]	n_2 [Min^{-1}]	M_2 [Nm]	f_B	i_{ges}	F_R [N]	F_A [N]	$F_{R\,GR}$ [N]	$F_{A\,GR}$ [N]	Tip / Type / Typ IE2 / IE3	Kg	mm
0.75	43.4	158	0.8	32.24	2.5	5.6	-	-	PKD B 0290 80M4C / 80M4D	21	190-191
	49.6	139	0.9	28.21	2.0	5.6	-	-			
	53.9	128	0.9	25.99	2.2	5.6	-	-			
	61.6	112	1.1	22.74	2.5	5.6	-	-			
	74.4	92	0.9	18.81	2.9	5.6	-	-			
	89.6	77	1.6	15.62	3.0	5.6	-	-			
	103.9	66	1.8	13.48	3.1	5.6	-	-			
	118.7	58	2.0	11.79	3.2	5.6	-	-			
	135.3	51	2.2	10.35	3.3	5.6	-	-			
	154.5	44	2.4	9.06	3.3	5.6	-	-			
	175.0	39	2.5	8.00	3.3	5.6	-	-			
	198.6	35	2.7	7.05	3.3	5.6	-	-			
	231.8	30	3.0	6.04	2.5	5.4	-	-			
	67.9	98	0.9	41.23	2.5	5.6	-	-	PKD B 0290 80M2B / 80M2C	21	190-191
	77.6	86	0.9	36.08	2.5	5.6	-	-			
	86.8	77	1.2	32.24	2.5	5.6	-	-			
	99.3	67	1.4	28.21	2.0	5.6	-	-			
	107.7	62	1.5	25.99	2.2	5.6	-	-			
	123.1	54	1.7	22.74	2.5	5.6	-	-			
	148.9	45	1.4	18.81	2.9	5.6	-	-			
	179.3	37	2.5	15.62	3.0	5.6	-	-			
	207.7	32	2.8	13.48	3.1	5.6	-	-			
	60.2	114	0.8	23.26	2.8	5.1	-	-	PKD A 0290 80M4C / 80M4D	17	186-187
	68.8	100	0.9	20.35	2.6	5.1	-	-			
	103.2	67	1.1	13.57	3.0	5.1	-	-			
	126.7	54	1.7	11.05	3.1	5.1	-	-			
	144.8	47	1.9	9.67	3.1	5.1	-	-			
	155.7	44	2.0	8.99	3.2	5.1	-	-			
	178.1	39	2.3	7.86	3.2	5.1	-	-			
	217.1	32	2.7	6.45	3.1	4.8	-	-			
	242.2	28	2.8	5.78	3.0	4.6	-	-			
	106.2	63	1.1	26.36	2.8	5.1	-	-	PKD A 0290 80M2B / 80M2C	17	186-187
	120.4	55	1.2	23.26	2.8	5.1	-	-			
	137.6	48	1.4	20.35	2.6	5.1	-	-			
	159.3	42	1.1	17.58	3.0	5.1	-	-			
	206.3	32	1.8	13.57	3.0	5.1	-	-			
	253.4	26	2.6	11.05	3.1	5.1	-	-			
	289.6	23	3.0	9.67	3.1	5.1	-	-			
1.10	0.2	59438	0.9	5575.65	-	-	-	-	PKD G 9390/63 90L6C / 90L6D	1788	282
	0.2	47347	1.1	4441.42	-	-	-	-			
	0.2	39363	1.3	3692.48	-	-	-	-			
	0.3	34221	1.5	3210.12	-	-	-	-			
	0.3	28560	1.8	2679.06	-	-	-	-			
	0.4	24692	2.1	2316.27	-	-	-	-			
	0.4	21876	2.4	2052.10	-	-	-	-			
	0.5	18914	2.8	1774.21	-	-	-	-			
	0.1	64138	0.8	9713.32	-	-	-	-	PKD G 9390/63 90L4B / 90L4C	1788	282
	0.2	54849	0.9	8306.57	-	-	-	-			
	0.2	51784	1.0	7842.34	-	-	-	-			
	0.2	44284	1.1	6706.55	-	-	-	-			
	0.3	36817	1.4	5575.65	-	-	-	-			
	0.3	29327	1.7	4441.42	-	-	-	-			
	0.4	24382	2.1	3692.48	-	-	-	-			
	0.4	21197	2.4	3210.12	-	-	-	-			
	0.5	17690	2.8	2679.06	-	-	-	-			
	0.3	31531	0.9	2913.46	152.0	70.0	-	-	PKD 9390/52 90L6C / 90L6D	1490	280
	0.4	22882	1.5	2114.30	152.0	70.0	-	-			
	0.5	19428	1.7	1795.13	152.0	70.0	-	-			
	0.6	15418	2.2	1424.59	152.0	70.0	160.0	70.0			
	0.8	12114	2.8	1119.32	152.0	70.0	160.0	70.0			
	0.3	33316	1.0	4933.39	-	-	-	-	PKD 9390/52 90L4B / 90L4C	1490	280
	0.4	24010	1.1	3555.41	-	-	-	-			
	0.5	19675	1.3	2913.46	-	-	-	-			
	0.7	14278	2.2	2114.30	-	-	-	-			
	0.8	12123	2.6	1795.13	-	-	-	-			

P_1 [kW]	n_2 [Min^{-1}]	M_2 [Nm]	f_B	i_{ges}	F_R [N]	F_A [N]	$F_{R\,GR}$ [N]	$F_{A\,GR}$ [N]	Tip / Type / Typ IE2 / IE3	Kg	mm
1.10	0.4	22881	0.9	2114.13	116.0	65.0	-	-	PKD G 8390/52 90L6C / 90L6D	920	280
	0.5	19335	1.1	1786.51	116.0	65.0	-	-			
	0.6	15836	1.3	1463.24	116.0	65.0	120.0	65.0			
	0.7	13028	1.6	1203.73	118.0	65.0	120.0	65.0			
	1.0	9846	2.1	909.80	120.0	65.0	120.0	65.0			
	1.3	7736	2.7	714.84	120.0	65.0	120.0	65.0			
	0.5	20387	0.9	3018.87	-	-	-	-	PKD G 8390/52 90L4B / 90L4C	920	280
	0.7	14277	1.3	2114.13	-	-	-	-			
	0.8	12065	1.5	1786.51	-	-	-	-			
	1.0	9882	1.8	1463.24	116.0	65.0	120.0	65.0			
	1.2	8129	2.2	1203.73	118.0	65.0	120.0	65.0			
	1.5	6144	2.9	909.80	120.0	65.0	120.0	65.0			
	0.6	15882	0.9	1467.49	87.0	60.0	95.0	60.0	PKD 8390/42 90L6C / 90L6D	645	280
	0.9	11017	1.2	1017.96	93.0	60.0	95.0	60.0			
	1.1	9149	1.5	845.40	94.0	60.0	95.0	60.0			
	1.3	7630	1.8	705.03	95.0	60.0	95.0	60.0			
	1.5	6525	2.1	602.92	95.0	60.0	95.0	60.0			
	2.0	4809	2.8	444.35	95.0	60.0	95.0	60.0			
	0.7	13823	0.9	2046.84	-	-	-	-	PKD 8390/42 90L4B / 90L4C	645	280
	0.8	12237	1.1	1812.03	-	-	-	-			
	1.0	9910	1.3	1467.49	87.0	60.0	95.0	60.0			
	1.4	6875	1.9	1017.96	93.0	60.0	95.0	60.0			
	1.7	5709	2.3	845.40	94.0	60.0	95.0	60.0			
	2.0	4761	2.7	705.03	95.0	60.0	95.0	60.0			
	0.9	10524	0.8	972.42	56.0	50.0	66.0	50.0	PKD 7390/32 90L6C / 90L6D	368	278
	1.2	8281	1.1	765.14	60.0	50.0	66.0	50.0			
	1.5	6451	1.4	596.10	62.0	50.0	66.0	50.0			
	1.9	5097	1.8	470.91	64.0	50.0	66.0	50.0			
	2.3	4164	2.1	384.74	56.0	50.0	66.0	50.0			
	2.9	3356	2.7	310.09	56.0	50.0	66.0	50.0			
	1.0	9781	0.9	1448.34	40.0	50.0	66.0	50.0	PKD 7390/32 90L4B / 90L4C	368	278
	1.2	7876	1.1	1166.22	51.0	50.0	66.0	50.0			
	1.4	6567	1.3	972.42	56.0	50.0	66.0	50.0			
	1.8	5167	1.6	765.14	60.0	50.0	66.0	50.0			
	2.3	4026	2.1	596.10	62.0	50.0	66.0	50.0			
	3.0	3180	2.7	470.91	64.0	50.0	66.0	50.0			
	1.2	7261	0.9	2312.67	40.0	50.0	-	-	PKD 7390/32 80M2C / 80M2D	364	278
	1.5	5994	1.1	1909.17	40.0	50.0	-	-			
	1.9	4547	1.4	1448.34	40.0	50.0	66.0	50.0			
	2.4	3661	1.8	1166.22	51.0	50.0	66.0	50.0			
	2.9	3053	2.1	972.42	56.0	50.0	66.0	50.0			
	3.7	2402	2.7	765.14	60.0	50.0	66.0	50.0			
	1.0	10092	0.9	932.46	57.0	50.0	66.0	50.0	PKD 6390/32 90L6C / 90L6D	368	278
	1.2	7940	1.1	733.69	61.0	50.0	66.0	50.0			
	1.6	6186	1.4	571.60	62.0	50.0	66.0	50.0			
	2.0	4887	1.8	451.55	64.0	50.0	66.0	50.0			
	2.4	3993	2.2	368.93	57.0	50.0	66.0	50.0			
	3.0	3218	2.7	297.35	57.0	50.0	66.0	50.0			
	1.0	9379	0.9	1388.82	43.0	50.0	66.0	50.0	PKD 6390/32 90L4B / 90L4C	368	278
	1.3	7552	1.1	1118.29	53.0	50.0	66.0	50.0			
	1.5	6297	1.3	932.46	57.0	50.0	66.0	50.0			
	1.9	4955	1.7	733.69	61.0	50.0	66.0	50.0			
	2.4	3860	2.1	571.60	62.0	50.0	66.0	50.0			
	3.1	3049	2.7	451.55	64.0	50.0	66.0	50.0			
	1.3	6962	0.9	2217.63	43.0	50.0	-	-	PKD 6390/32 80M2C / 80M2D	364	278
	1.5	5748	1.1	1830.71	43.0	50.0	-	-			
	2.0	4360	1.4	1388.82	43.0	50.0	66.0	50.0			
	2.5	3511	1.8	1118.29	53.0	50.0	66.0	50.0			
	3.0	2928	2.1	932.46	57.0	50.0	66.0	50.0			
	3.8	2303	2.7	733.69	61.0	50.0	66.0	50.0			
	1.6	6379	0.8	580.56	30.0	45.0	38.0	45.0	PKD 5490 90L6C / 90L6D	212	250-251
	2.0	5044	1.0	459.05	33.0	45.0	38.0	45.0			
	2.6	3833	1.3	348.85	36.0	45.0	38.0	45.0			
	3.4	2908	1.7	264.64	37.0	45.0	38.0	45.0			
	3.9	2516	2.0	228.99	38.0	45.0	38.0	45.0			
	5.5	1813	2.8	165.02	23.0	45.0	38.0	45.0			

P_1 [kW]	n_2 [Min^{-1}]	M_2 [Nm]	f_B	i_{ges}	F_R [N]	F_A [N]	$F_{R\,GR}$ [N]	$F_{A\,GR}$ [N]	Tip / Type / Typ IE2 / IE3	Kg	mm
1.10	2.0	4858	1.0	703.71	25.0	45.0	38.0	45.0	PKD 5490 90L4B / 90L4C	212	250-251
	2.4	4008	1.2	580.56	30.0	45.0	38.0	45.0			
	3.0	3169	1.5	459.05	33.0	45.0	38.0	45.0			
	4.0	2408	2.0	348.85	36.0	45.0	38.0	45.0			
	5.3	1827	2.6	264.64	37.0	45.0	38.0	45.0			
	6.1	1581	3.0	228.99	38.0	45.0	38.0	45.0			
	2.0	4554	0.8	1399.82	25.0	45.0	38.0	45.0	PKD 5490 80M2C / 80M2D	208	250-251
	2.6	3455	1.1	1061.93	25.0	45.0	38.0	45.0			
	3.0	3029	1.2	931.06	25.0	45.0	38.0	45.0			
	4.0	2290	1.3	703.71	25.0	45.0	38.0	45.0			
	4.8	1889	1.9	580.56	30.0	45.0	38.0	45.0			
	6.1	1494	2.4	459.05	33.0	45.0	38.0	45.0			
	3.1	3231	1.6	289.62	37.0	45.0	38.0	45.0	PKD 5390 90L6C / 90L6D	194	246-247
	3.6	2759	1.8	247.36	37.0	45.0	38.0	45.0			
	6.2	1621	2.3	145.30	37.0	45.0	38.0	43.0			
	4.8	2043	2.3	289.62	37.0	45.0	38.0	45.0	PKD 5390 90L4B / 90L4C	194	246-247
	5.7	1745	2.8	247.36	37.0	45.0	38.0	45.0			
	2.6	3850	0.8	350.42	23.0	40.0	28.0	31.0	PKD 4490 90L6C / 90L6D	134	242-243
	3.2	3065	1.0	278.98	27.0	40.0	28.0	33.0			
	4.4	2243	1.3	204.13	27.0	40.0	28.0	31.0			
	5.2	1891	1.6	172.07	17.0	40.0	28.0	30.0			
	3.5	2793	1.0	404.53	20.0	40.0	28.0	31.0	PKD 4490 90L4B / 90L4C	134	242-243
	4.0	2419	1.2	350.42	23.0	40.0	28.0	31.0			
	5.0	1926	1.5	278.98	27.0	40.0	28.0	33.0			
	6.9	1409	2.0	204.13	27.0	40.0	28.0	31.0			
	8.1	1188	2.4	172.07	17.0	40.0	28.0	30.0			
	4.3	2098	1.0	644.73	20.0	40.0	28.0	37.0	PKD 4490 80M2C / 80M2D	130	242-243
	4.9	1847	1.2	567.85	20.0	40.0	28.0	37.0			
	8.0	1140	1.9	350.42	23.0	40.0	28.0	31.0			
	10.0	908	2.3	278.98	27.0	40.0	28.0	33.0			
	2.7	3676	0.8	329.57	23.0	40.0	28.0	31.0	PKD 4390 90L6C / 90L6D	119	238-239
	3.3	3054	1.0	273.80	25.0	40.0	28.0	30.0			
	3.8	2619	1.1	234.83	26.0	40.0	28.0	30.0			
	4.6	2176	1.4	195.09	27.0	40.0	28.0	29.0			
	5.4	1844	0.9	165.34	27.0	40.0	28.0	28.0			
	7.6	1314	1.9	117.81	28.0	40.0	28.0	26.0			
	9.4	1066	2.8	95.57	28.0	40.0	28.0	24.0			
	10.4	965	3.0	86.50	28.0	40.0	28.0	24.0			
	4.2	2325	1.2	329.57	23.0	40.0	28.0	31.0	PKD 4390 90L4B / 90L4C	119	238-239
	5.1	1931	1.4	273.80	25.0	40.0	28.0	30.0			
	6.0	1656	1.7	234.83	26.0	40.0	28.0	30.0			
	7.2	1376	2.0	195.09	27.0	40.0	28.0	29.0			
	8.5	1166	1.3	165.34	27.0	40.0	28.0	28.0			
	11.9	831	2.9	117.81	28.0	40.0	28.0	26.0			
	5.4	1841	0.9	167.59	15.0	15.0	-	-	PKD 3490 90L6C / 90L6D	80	234-235
	5.2	1849	0.8	267.79	1.0	15.0	12.0	17.0	PKD 3490 90L4B / 90L4C	80	234-235
	6.5	1485	1.0	215.12	15.0	15.0	-	-			
	8.4	1157	1.3	167.59	15.0	15.0	-	-			
	7.0	1299	0.9	399.39	1.0	15.0	15.0	23.0	PKD 3490 80M2C / 80M2D	76	234-235
	7.9	1148	1.0	353.00	1.0	15.0	14.0	20.0			
	10.5	871	1.4	267.79	1.0	15.0	12.0	17.0			
	13.0	700	1.7	215.12	15.0	15.0	-	-			
	16.7	545	2.2	167.59	15.0	15.0	-	-			
	4.8	2100	0.8	188.22	9.0	15.0	15.0	16.0	PKD 3390 90L6C / 90L6D	72	230-231
	5.7	1773	0.9	158.92	11.0	15.0	15.0	16.0			
	6.5	1556	1.0	139.49	12.0	15.0	15.0	16.0			
	7.6	1314	1.2	117.78	13.0	15.0	15.0	15.0			
	8.1	1238	1.3	110.94	14.0	15.0	15.0	15.0			
	9.6	1045	1.6	93.67	14.0	15.0	15.0	15.0			
	10.7	939	1.7	84.16	14.0	15.0	15.0	15.0			
	11.9	847	1.9	75.92	13.0	15.0	15.0	15.0			
	14.0	715	2.3	64.11	8.0	15.0	15.0	14.0			
	15.2	660	2.5	59.15	8.0	15.0	15.0	14.0			
	18.0	557	2.9	49.94	8.0	15.0	15.0	13.0			

P_1 [kW]	n_2 [Min^{-1}]	M_2 [Nm]	f_B	i_{ges}	F_R [N]	F_A [N]	$F_{R\,GR}$ [N]	$F_{A\,GR}$ [N]	Tip / Type / Typ IE2 / IE3	Kg	mm
1.10	5.6	1763	0.9	250.01	1.0	15.0	14.0	16.0	PKD 3390 90L4B / 90L4C	72	230-231
	6.0	1651	0.9	234.13	4.0	15.0	15.0	16.0			
	7.1	1394	1.1	197.69	9.0	15.0	15.0	16.0			
	7.4	1328	1.2	188.22	9.0	15.0	15.0	16.0			
	8.8	1121	1.4	158.92	11.0	15.0	15.0	16.0			
	10.0	984	1.6	139.49	12.0	15.0	15.0	16.0			
	11.9	831	1.9	117.78	13.0	15.0	15.0	15.0			
	12.6	782	2.0	110.94	14.0	15.0	15.0	15.0			
	14.9	661	2.3	93.67	14.0	15.0	15.0	15.0			
	16.6	594	2.6	84.16	14.0	15.0	15.0	15.0			
	18.4	535	2.9	75.92	13.0	15.0	15.0	15.0			
	9.5	998	1.2	296.10	1.0	15.0	14.0	16.0	PKD 3390 80M2C / 80M2D	68	230-231
	11.2	843	1.4	250.01	1.0	15.0	14.0	16.0			
	12.0	789	1.5	234.13	4.0	15.0	15.0	16.0			
	14.2	667	1.8	197.69	9.0	15.0	15.0	16.0			
	9.1	1103	0.8	98.92	5.0	12.0	10.0	15.0	PKD 2390 90L6C / 90L6D	52	222-223
	11.4	880	1.0	78.85	7.0	12.0	11.0	15.0			
	13.5	741	1.2	66.47	8.0	12.0	12.0	14.0			
	15.5	650	1.4	58.24	8.0	12.0	12.0	14.0			
	17.3	581	1.6	52.11	8.0	12.0	12.0	14.0			
	18.4	546	1.7	48.99	9.0	12.0	12.0	13.0			
	20.1	500	1.8	44.80	9.0	12.0	12.0	13.0			
	22.7	443	2.0	39.70	2.0	12.0	12.0	13.0			
	27.0	371	2.4	33.28	2.0	12.0	12.0	12.0			
	28.6	351	2.5	31.43	2.0	12.0	12.0	12.0			
	30.8	326	2.8	29.22	2.0	12.0	12.0	12.0			
	14.2	698	1.2	98.92	5.0	12.0	10.0	15.0	PKD 2390 90L4B / 90L4C	52	222-223
	17.8	556	1.5	78.85	7.0	12.0	11.0	15.0			
	21.1	469	1.8	66.47	8.0	12.0	12.0	14.0			
	24.0	411	2.1	58.24	8.0	12.0	12.0	14.0			
	26.9	368	2.3	52.11	8.0	12.0	12.0	14.0			
	28.6	346	2.5	48.99	9.0	12.0	12.0	13.0			
	31.3	316	2.7	44.80	9.0	12.0	12.0	13.0			
	12.8	739	0.9	219.34	5.0	12.0	4.0	18.0	PKD 2390 80M2C / 80M2D	48	222-223
	15.2	622	1.1	184.51	5.0	12.0	8.0	18.0			
	16.5	573	1.1	169.88	5.0	12.0	9.0	18.0			
	20.3	464	1.4	137.63	5.0	12.0	10.0	17.0			
	24.2	390	1.7	115.77	5.0	12.0	11.0	17.0			
	28.3	334	2.0	98.92	5.0	12.0	10.0	15.0			
	32.9	287	2.3	85.23	7.0	12.0	12.0	16.0			
	35.5	266	2.5	78.85	7.0	12.0	11.0	15.0			
	42.1	224	2.9	66.47	8.0	12.0	12.0	14.0			
	12.5	802	0.8	71.94	8.0	20.0	9.0	20.0	PKD G 1390 90L6C / 90L6D	45	214-215
	14.0	715	0.9	64.06	8.0	20.0	9.0	20.0			
	17.2	585	1.1	52.42	9.0	20.0	9.0	20.0			
	19.5	515	1.2	46.16	9.0	20.0	9.0	20.0			
	22.0	456	1.4	40.87	9.0	20.0	9.0	20.0			
	25.8	389	1.6	34.86	9.0	20.0	9.0	20.0			
	29.6	340	1.9	30.44	9.0	20.0	9.0	20.0			
	34.2	293	2.1	26.30	5.0	20.0	9.0	19.0			
	38.9	258	2.1	23.16	5.0	20.0	9.0	19.0			
	43.9	229	2.7	20.51	5.0	20.0	9.0	18.0			
	51.5	195	2.9	17.49	5.0	20.0	9.0	16.0			
	17.2	574	1.0	81.40	7.0	20.0	9.0	20.0	PKD G 1390 90L4B / 90L4C	45	214-215
	19.5	507	1.2	71.94	8.0	20.0	9.0	20.0			
	21.9	452	1.4	64.06	8.0	20.0	9.0	20.0			
	26.7	370	1.6	52.42	9.0	20.0	9.0	20.0			
	30.3	326	1.9	46.16	9.0	20.0	9.0	20.0			
	34.3	288	2.1	40.87	9.0	20.0	9.0	20.0			
	40.2	246	2.4	34.86	9.0	20.0	9.0	20.0			
	46.0	215	2.8	30.44	9.0	20.0	9.0	20.0			

P_1 [kW]	n_2 [Min^{-1}]	M_2 [Nm]	f_B	i_{ges}	F_R [N]	F_A [N]	$F_{R\,GR}$ [N]	$F_{A\,GR}$ [N]	Tip / Type / Typ IE2 / IE3	Kg	mm
1.10	15.3	617	0.8	183.15	7.0	20.0	-	-	PKD G 1390 80M2C / 80M2D	41	214-215
	18.7	505	0.9	149.85	7.0	20.0	9.0	20.0			
	19.7	480	1.0	142.45	7.0	20.0	9.0	20.0			
	24.0	393	1.2	116.55	7.0	20.0	9.0	20.0			
	30.5	310	1.2	91.88	7.0	20.0	9.0	20.0			
	34.4	274	1.7	81.40	7.0	20.0	9.0	20.0			
	38.9	243	1.9	71.94	8.0	20.0	9.0	20.0			
	43.7	216	2.1	64.06	8.0	20.0	9.0	20.0			
	53.4	177	2.6	52.42	9.0	20.0	9.0	20.0			
	60.7	156	3.0	46.16	9.0	20.0	9.0	20.0			
	18.4	546	0.8	48.92	5.0	20.0	9.0	20.0	PKD 1390 90L6C / 90L6D	44	206-207
	21.6	465	0.9	41.72	6.0	20.0	9.0	20.0			
	25.8	389	1.1	34.86	6.0	20.0	9.0	20.0			
	28.6	351	1.2	31.48	7.0	20.0	9.0	20.0			
	32.5	309	1.4	27.72	7.0	20.0	9.0	20.0			
	36.7	274	1.5	24.55	5.0	20.0	9.0	19.0			
	43.0	233	1.8	20.93	5.0	20.0	9.0	19.0			
	51.5	195	2.0	17.49	5.0	20.0	9.0	18.0			
	58.9	170	2.3	15.27	5.0	20.0	9.0	17.0			
	73.3	137	1.7	12.27	5.0	20.0	9.0	16.0			
	82.9	121	1.7	10.86	5.0	20.0	9.0	16.0			
	97.2	103	2.0	9.26	5.0	20.0	9.0	15.0			
	111.2	90	2.1	8.09	5.0	20.0	9.0	15.0			
	22.3	443	0.9	62.74	4.0	20.0	8.0	20.0	PKD 1390 90L4B / 90L4C	44	206-207
	25.3	390	1.0	55.26	5.0	20.0	9.0	20.0			
	28.6	345	1.2	48.92	5.0	20.0	9.0	20.0			
	33.6	294	1.4	41.72	6.0	20.0	9.0	20.0			
	40.2	246	1.6	34.86	6.0	20.0	9.0	20.0			
	44.5	222	1.8	31.48	7.0	20.0	9.0	20.0			
	50.5	196	2.0	27.72	7.0	20.0	9.0	20.0			
	25.5	371	0.8	109.98	4.0	20.0	8.0	20.0	PKD 1390 80M2C / 80M2D	40	206-207
	28.7	328	0.9	97.43	4.0	20.0	8.0	20.0			
	32.5	290	1.0	86.12	4.0	20.0	8.0	20.0			
	36.5	259	1.2	76.68	4.0	20.0	9.0	20.0			
	44.6	212	1.4	62.74	4.0	20.0	8.0	20.0			
	50.7	186	1.6	55.26	5.0	20.0	9.0	20.0			
	57.2	165	1.8	48.92	5.0	20.0	9.0	20.0			
	67.1	141	2.2	41.72	6.0	20.0	9.0	20.0			
	80.3	118	2.6	34.86	6.0	20.0	9.0	20.0			
	88.9	106	2.9	31.48	7.0	20.0	9.0	20.0			
	17.2	594	1.0	52.42	7.2	12.0	-	-	PKD H 5290 90L6C / 90L6D	53	202-203
	19.6	519	1.0	45.86	7.4	12.0	-	-			
	22.1	462	1.0	40.77	7.6	12.0	-	-			
	24.6	414	1.7	36.59	7.8	12.0	-	-			
	28.1	363	1.8	32.02	7.9	12.0	-	-			
	31.6	322	2.0	28.46	8.0	12.0	-	-			
	50.4	202	3.0	17.84	7.5	12.0	-	-			
	26.7	378	1.5	52.42	7.2	12.0	-	-	PKD H 5290 90L4B / 90L4C	53	202-203
	30.5	330	1.5	45.86	7.4	12.0	-	-			
	34.3	294	1.5	40.77	7.6	12.0	-	-			
	38.3	264	2.5	36.59	7.8	12.0	-	-			
	43.7	231	2.7	32.02	7.9	12.0	-	-			
	49.2	205	2.9	28.46	8.0	12.0	-	-			
	43.8	223	1.6	63.96	7.2	12.0	-	-	PKD H 5290 80M2C / 80M2D	49	202-203
	50.0	196	1.6	55.96	7.2	12.0	-	-			
	53.4	183	2.4	52.42	7.2	12.0	-	-			
	61.1	160	2.4	45.86	7.4	12.0	-	-			
	68.7	142	2.4	40.77	7.6	12.0	-	-			
	21.4	476	0.8	42.01	4.8	12.0	-	-	PKD F 4290 90L6C / 90L6D	41	198-199
	24.1	423	0.8	37.34	5.1	12.0	-	-			
	26.4	387	1.0	34.15	5.3	12.0	-	-			
	30.1	338	1.1	29.88	5.5	12.0	-	-			
	33.9	301	1.2	26.56	5.7	12.0	-	-			
	56.0	182	2.1	16.08	4.9	12.0	-	-			
	64.0	159	2.2	14.07	4.9	12.0	-	-			
	71.3	143	2.5	12.63	4.9	12.0	-	-			
	82.0	124	2.8	10.98	4.9	12.0	-	-			
	92.2	111	3.0	9.76	4.9	12.0	-	-			

P_1 [kW]	n_2 [Min^{-1}]	M_2 [Nm]	f_B	i_{ges}	F_R [N]	F_A [N]	$F_{R\,GR}$ [N]	$F_{A\,GR}$ [N]	Tip / Type / Typ IE2 / IE3	Kg	mm
1.10	29.2	346	1.1	48.01	4.3	12.0	-	-	PKD F 4290 90L4B / 90L4C	41	198-199
	33.3	303	1.1	42.01	4.8	12.0	-	-			
	37.5	269	1.2	37.34	5.1	12.0	-	-			
	41.0	246	1.5	34.15	5.3	12.0	-	-			
	46.9	215	1.6	29.88	5.5	12.0	-	-			
	52.7	191	1.7	26.56	5.7	12.0	-	-			
	47.3	207	1.4	59.20	4.3	12.0	-	-	PKD F 4290 80M2C / 80M2D	37	198-199
	54.1	181	1.4	51.80	4.3	12.0	-	-			
	58.3	168	1.7	48.01	4.3	12.0	-	-			
	66.7	147	1.8	42.01	4.8	12.0	-	-			
	75.0	130	1.9	37.34	5.1	12.0	-	-			
	82.0	119	2.4	34.15	5.3	12.0	-	-			
	93.7	104	2.5	29.88	5.5	12.0	-	-			
	105.4	93	2.7	26.56	5.7	12.0	-	-			
	32.9	310	0.8	27.36	3.6	9.0	-	-	PKD C 1290 90L6C / 60L6D	32	194-195
	37.0	275	0.8	24.32	3.9	9.0	-	-			
	41.0	248	0.8	21.94	4.1	9.0	-	-			
	46.9	217	1.1	19.19	4.2	9.0	-	-			
	52.8	193	1.3	17.06	4.3	9.0	-	-			
	61.4	166	1.2	14.66	4.4	9.0	-	-			
	69.3	147	1.4	12.99	4.5	9.0	-	-			
	79.2	129	1.6	11.37	4.6	9.0	-	-			
	83.3	122	1.5	10.81	4.6	9.0	-	-			
	95.0	107	1.7	9.47	4.6	9.0	-	-			
	108.6	94	2.0	8.29	4.7	9.0	-	-			
	123.5	83	2.1	7.29	3.7	9.0	-	-			
	138.9	73	2.3	6.48	3.7	9.0	-	-			
	150.8	68	2.4	5.97	3.7	9.0	-	-			
	169.5	60	2.5	5.31	3.7	9.0	-	-			
	44.8	225	0.8	31.27	3.2	9.0	-	-	PKD C 1290 90L4B / 90L4C	32	194-195
	51.2	197	1.2	27.36	3.6	9.0	-	-			
	57.6	175	1.2	24.32	3.9	9.0	-	-			
	63.8	158	1.2	21.94	4.1	9.0	-	-			
	73.0	138	1.7	19.19	4.2	9.0	-	-			
	82.1	123	1.9	17.06	4.3	9.0	-	-			
	95.5	106	1.8	14.66	4.4	9.0	-	-			
	107.8	94	2.1	12.99	4.5	9.0	-	-			
	123.1	82	2.4	11.37	4.6	9.0	-	-			
	129.5	78	2.3	10.81	4.6	9.0	-	-			
	147.8	68	2.6	9.47	4.6	9.0	-	-			
	168.9	60	2.9	8.29	4.7	9.0	-	-			
	64.4	152	0.8	43.48	3.2	9.0	-	-	PKD C 1290 80M2C / 80M2D	28	194-195
	72.6	135	1.1	38.59	3.2	9.0	-	-			
	82.9	118	1.2	33.76	3.2	9.0	-	-			
	89.5	109	1.3	31.27	3.2	9.0	-	-			
	102.3	96	1.8	27.36	3.6	9.0	-	-			
	115.1	85	1.9	24.32	3.9	9.0	-	-			
	127.6	77	1.9	21.94	4.1	9.0	-	-			
	145.9	67	2.6	19.19	4.2	9.0	-	-			
	164.1	60	2.9	17.06	4.3	9.0	-	-			
	191.0	51	2.8	14.66	4.4	9.0	-	-			
	66.8	153	0.8	13.48	3.1	5.6	-	-	PKD B 0290 90L6C / 90L6D	25	190-191
	76.3	134	0.9	11.79	3.1	5.6	-	-			
	87.0	117	1.0	10.35	3.1	5.6	-	-			
	99.3	103	1.1	9.06	3.2	5.6	-	-			
	112.5	91	1.2	8.00	3.2	5.6	-	-			
	127.7	80	1.2	7.05	3.3	5.5	-	-			
	149.0	68	1.4	6.04	3.3	5.2	-	-			
	168.5	60	1.5	5.34	3.3	5.0	-	-			
	188.7	54	1.6	4.77	3.3	4.8	-	-			
	219.0	47	1.7	4.11	3.2	4.5	-	-			

P_1 [kW]	n_2 [Min^{-1}]	M_2 [Nm]	f_B	i_{ges}	F_R [N]	F_A [N]	$F_{R\,GR}$ [N]	$F_{A\,GR}$ [N]	Tip / Type / Typ IE2 / IE3	Kg	mm
1.10	89.6	113	1.1	15.62	3.0	5.6	-	-	PKD B 0290 90L4B / 90L4C	25	190-191
	103.9	97	1.2	13.48	3.1	5.6	-	-			
	118.7	85	1.4	11.79	-	-	-	-			
	135.3	75	1.5	10.35	3.1	5.6	-	-			
	154.5	65	1.6	9.06	3.2	5.6	-	-			
	175.0	58	1.7	8.00	3.2	5.6	-	-			
	198.6	51	1.9	7.05	3.3	5.5	-	-			
	231.8	44	2.1	6.04	3.3	5.2	-	-			
	262.2	38	2.2	5.34	3.3	5.0	-	-			
	293.5	34	2.3	4.77	3.3	4.8	-	-			
	340.6	30	2.5	4.11	3.2	4.5	-	-			
	86.8	113	0.8	32.24	3.0	5.6	-	-	PKD B 0290 80M2C / 80M2D	21	190-191
	99.3	99	0.9	28.21	3.0	5.6	-	-			
	107.7	91	1.0	25.99	3.0	5.6	-	-			
	123.1	79	1.1	22.74	3.0	5.6	-	-			
	148.9	66	1.0	18.81	3.0	5.6	-	-			
	179.3	55	1.7	15.62	3.0	5.6	-	-			
	207.7	47	1.9	13.48	3.1	5.6	-	-			
	237.5	41	2.1	11.79	3.1	5.6	-	-			
	270.5	36	2.3	10.35	3.1	5.6	-	-			
	309.1	32	2.5	9.06	3.2	5.6	-	-			
	350.0	28	2.7	8.00	3.2	5.6	-	-			
	397.2	25	2.9	7.05	3.3	5.5	-	-			
	120.4	81	0.8	23.26	2.8	5.1	-	-	PKD A 0290 80M2C / 80M2D	17	186-187
	137.6	71	1.0	20.35	2.8	5.1	-	-			
	206.3	47	1.2	13.57	2.8	5.1	-	-			
	253.4	39	1.8	11.05	2.8	5.1	-	-			
	289.6	34	2.0	9.67	2.8	5.1	-	-			
	311.5	31	2.2	8.99	2.8	5.1	-	-			
	356.2	27	2.5	7.86	2.8	5.1	-	-			
	434.1	23	2.9	6.45	2.8	5.1	-	-			
	484.4	20	3.0	5.78	2.8	5.1	-	-			
1.50	0.2	64564	0.8	4441.42	-	-	-	-	PKD G 9390/63 100L6C / 100L6D	1798	282
	0.2	53677	1.0	3692.48	-	-	-	-			
	0.3	46665	1.1	3210.12	-	-	-	-			
	0.3	38945	1.3	2679.06	-	-	-	-			
	0.4	33671	1.6	2316.27	-	-	-	-			
	0.4	29831	1.8	2052.10	-	-	-	-			
	0.5	25791	2.0	1774.21	-	-	-	-			
	0.2	60388	0.8	6706.55	-	-	-	-	PKD G 9390/63 90L4C / 90L4D	1788	282
	0.3	50205	1.0	5575.65	-	-	-	-			
	0.3	39992	1.3	4441.42	-	-	-	-			
	0.4	33248	1.5	3692.48	-	-	-	-			
	0.4	28905	1.7	3210.12	-	-	-	-			
	0.5	24123	2.1	2679.06	-	-	-	-			
	0.6	20856	2.4	2316.27	-	-	-	-			
	0.7	18478	2.7	2052.10	-	-	-	-			
	0.2	49391	0.8	11954.86	-	-	-	-	PKD G 9390/63 90L2B / 90L2C	1788	282
	0.3	40130	0.9	9713.32	-	-	-	-			
	0.3	34318	1.1	8306.57	-	-	-	-			
	0.4	32400	1.2	7842.34	-	-	-	-			
	0.4	27708	1.4	6706.55	-	-	-	-			
	0.5	23035	1.6	5575.65	-	-	-	-			
	0.6	18349	2.1	4441.42	-	-	-	-			
	0.8	15255	2.5	3692.48	-	-	-	-			
	0.9	13262	2.9	3210.12	-	-	-	-			
	0.6	23962	2.2	1623.67	-	-	-	-	PKD G 9390/62 100L6C / 100L6D	1800	282
	0.7	19981	2.6	1353.86	-	-	-	-			
	0.4	31203	1.1	2114.30	152.0	70.0	-	-	PKD 9390/52 100L6C / 100L6D	1500	280
	0.5	26493	1.3	1795.13	152.0	70.0	-	-			
	0.6	21024	1.6	1424.59	152.0	70.0	160.0	70.0			
	0.8	16519	2.0	1119.32	152.0	70.0	160.0	70.0			
	1.1	12485	2.7	846.00	152.0	70.0	160.0	70.0			

P_1 [kW]	n_2 [Min^{-1}]	M_2 [Nm]	f_B	i_{ges}	F_R [N]	F_A [N]	$F_{R\,GR}$ [N]	$F_{A\,GR}$ [N]	Tip / Type / Typ IE2 / IE3	Kg	mm
1.50	0.4	32742	0.8	3555.41	-	-	-	-	PKD 9390/52 90L4C / 90L4D	1490	280
	0.5	26830	1.0	2913.46	-	-	-	-			
	0.7	19470	1.6	2114.30	-	-	-	-			
	0.8	16531	1.9	1795.13	-	-	-	-			
	1.0	13119	2.4	1424.59	152.0	70.0	160.0	70.0			
	0.6	21121	1.2	4933.39	152.0	70.0	-	-	PKD 9390/52 90L2B / 90L2C	1490	280
	0.8	15222	1.3	3555.41	152.0	70.0	-	-			
	1.0	12473	1.6	2913.46	152.0	70.0	-	-			
	1.3	9052	2.7	2114.30	152.0	70.0	-	-			
	0.5	26366	0.8	1786.51	109.0	120.0	-	-	PKD G 8390/52 100L6C / 100L6D	930	280
	0.6	21595	1.0	1463.24	109.0	120.0	120.0	65.0			
	0.7	17765	1.2	1203.73	114.0	120.0	120.0	65.0			
	1.0	13427	1.6	909.80	117.0	120.0	120.0	65.0			
	1.3	10550	2.0	714.84	120.0	120.0	120.0	65.0			
	1.4	9204	2.3	623.65	116.0	65.0	120.0	65.0			
	0.7	19469	0.9	2114.13	-	-	-	-	PKD G 8390/52 90L4C / 90L4D	920	280
	0.8	16452	1.1	1786.51	-	-	-	-			
	1.0	13475	1.3	1463.24	109.0	120.0	120.0	65.0			
	1.2	11085	1.6	1203.73	114.0	120.0	120.0	65.0			
	1.5	8378	2.1	909.80	117.0	120.0	120.0	65.0			
	2.0	6583	2.7	714.84	120.0	120.0	120.0	65.0			
	0.8	15429	1.0	3603.72	109.0	120.0	-	-	PKD G 8390/52 90L2B / 90L2C	920	280
	0.9	12925	1.2	3018.87	109.0	120.0	-	-			
	1.3	9051	1.7	2114.13	109.0	120.0	-	-			
	1.6	7649	2.0	1786.51	109.0	120.0	-	-			
	1.9	6265	2.4	1463.24	109.0	120.0	120.0	65.0			
	2.3	5153	2.9	1203.73	114.0	120.0	120.0	65.0			
	0.9	15023	0.9	1017.96	89.0	60.0	95.0	60.0	PKD 8390/42 100L6C / 100L6D	655	280
	1.1	12477	1.1	845.40	91.0	60.0	95.0	60.0			
	1.3	10405	1.3	705.03	93.0	60.0	95.0	60.0			
	1.5	8898	1.5	602.92	94.0	60.0	95.0	60.0			
	2.0	6558	2.1	444.35	87.0	60.0	95.0	60.0			
	2.4	5608	2.4	379.99	87.0	60.0	95.0	60.0			
	0.8	16687	0.8	1812.03	-	-	-	-	PKD 8390/42 90L4C / 90L4D	645	280
	1.0	13514	1.0	1467.49	78.0	60.0	95.0	60.0			
	1.4	9374	1.4	1017.96	89.0	60.0	95.0	60.0			
	1.7	7785	1.7	845.40	91.0	60.0	95.0	60.0			
	2.0	6493	2.0	705.03	93.0	60.0	95.0	60.0			
	2.3	5552	2.3	602.92	94.0	60.0	95.0	60.0			
	1.0	11508	0.9	2688.01	78.0	60.0	-	-	PKD 8390/42 90L2B / 90L2C	645	280
	1.4	8763	1.1	2046.84	78.0	60.0	-	-			
	1.5	7758	1.3	1812.03	78.0	60.0	-	-			
	1.9	6283	1.6	1467.49	78.0	60.0	95.0	60.0			
	2.8	4358	2.3	1017.96	89.0	60.0	95.0	60.0			
	3.3	3619	2.7	845.40	91.0	60.0	95.0	60.0			
	3.3	3976	2.2	269.43	37.0	50.0	66.0	50.0	PKD 7390/42 100L6C / 100L6D	395	278
	4.6	2897	2.7	196.30	37.0	50.0	66.0	50.0			
	5.7	2318	2.9	157.05	37.0	50.0	66.0	49.0			
	1.2	11292	0.8	765.14	54.0	50.0	66.0	50.0	PKD 7390/32 100L6C / 100L6D	378	278
	1.5	8797	1.0	596.10	59.0	50.0	66.0	50.0			
	1.9	6950	1.3	470.91	62.0	50.0	66.0	50.0			
	2.3	5678	1.6	384.74	63.0	50.0	66.0	50.0			
	2.9	4576	2.0	310.09	64.0	50.0	66.0	50.0			
	1.2	10740	0.8	1166.22	51.0	50.0	66.0	50.0	PKD 7390/32 90L4C / 90L4D	368	278
	1.4	8955	0.9	972.42	45.0	50.0	66.0	50.0			
	1.8	7046	1.2	765.14	54.0	50.0	66.0	50.0			
	2.3	5489	1.5	596.10	59.0	50.0	66.0	50.0			
	3.0	4337	2.0	470.91	62.0	50.0	66.0	50.0			
	3.6	3543	2.4	384.74	63.0	50.0	66.0	50.0			
	4.5	2856	3.0	310.09	64.0	50.0	66.0	50.0			

P_1 [kW]	n_2 [Min^{-1}]	M_2 [Nm]	f_B	i_{ges}	F_R [N]	F_A [N]	$F_{R\,GR}$ [N]	$F_{A\,GR}$ [N]	Tip / Type / Typ IE2 / IE3	Kg	mm
1.50	1.5	8174	0.8	1909.17	51.0	50.0	-	-	PKD 7390/32 90L2B / 90L2C	278	268
	1.9	6201	1.0	1448.34	51.0	50.0	66.0	50.0			
	2.4	4993	1.3	1166.22	51.0	50.0	66.0	50.0			
	2.9	4163	1.6	972.42	45.0	50.0	66.0	50.0			
	3.7	3276	2.0	765.14	54.0	50.0	66.0	50.0			
	4.7	2552	2.5	596.10	59.0	50.0	66.0	50.0			
	3.7	3735	2.4	245.55	64.0	50.0	66.0	50.0	PKD 7390 100L6C / 100L6D	344	258-259
	4.3	3148	2.8	206.98	64.0	50.0	66.0	50.0			
	3.5	3813	2.3	258.36	42.0	45.0	66.0	50.0	PKD 6390/42 100L6C / 100L6D	395	278
	4.8	2778	2.7	188.23	42.0	45.0	66.0	50.0			
	6.0	2223	2.9	150.60	42.0	45.0	66.0	50.0			
	1.2	10828	0.8	733.69	55.0	50.0	66.0	50.0	PKD 6390/32 100L6C / 100L6D	378	278
	1.6	8436	1.0	571.60	60.0	50.0	66.0	50.0			
	2.0	6664	1.3	451.55	62.0	50.0	66.0	50.0			
	2.4	5445	1.6	368.93	63.0	50.0	66.0	50.0			
	3.0	4388	2.0	297.35	64.0	50.0	66.0	50.0			
	1.3	10298	0.8	1118.29	53.0	50.0	66.0	50.0	PKD 6390/32 90L4C / 90L4D	368	278
	1.5	8587	1.0	932.46	48.0	50.0	66.0	50.0			
	1.9	6756	1.2	733.69	55.0	50.0	66.0	50.0			
	2.4	5264	1.6	571.60	60.0	50.0	66.0	50.0			
	3.1	4158	2.0	451.55	62.0	50.0	66.0	50.0			
	3.8	3397	2.4	368.93	63.0	50.0	66.0	50.0			
	4.7	2738	3.0	297.35	64.0	50.0	66.0	50.0			
	1.5	7838	0.8	1830.71	53.0	50.0	-	-	PKD 6390/32 90L2B / 90L2C	368	278
	2.0	5946	1.0	1388.82	53.0	50.0	66.0	50.0			
	2.5	4788	1.3	1118.29	53.0	50.0	66.0	50.0			
	3.0	3992	1.6	932.46	48.0	50.0	66.0	50.0			
	3.8	3141	2.0	733.69	55.0	50.0	66.0	50.0			
	4.9	2447	2.5	571.60	60.0	50.0	66.0	50.0			
	3.8	3581	2.4	235.45	64.0	50.0	66.0	50.0	PKD 6390 100L6C / 100L6D	344	254-255
	4.5	3015	2.9	198.23	64.0	50.0	66.0	50.0			
	2.6	5227	1.0	348.85	33.0	45.0	38.0	45.0	PKD 5490 100L6C / 100L6D	222	250-251
	3.4	3965	1.3	264.64	36.0	45.0	38.0	45.0			
	3.9	3431	1.5	228.99	36.0	45.0	38.0	45.0			
	5.5	2472	2.0	165.02	25.0	45.0	38.0	44.0			
	2.4	5465	0.9	580.56	30.0	45.0	38.0	45.0	PKD 5490 90L4C / 90L4D	212	250-251
	3.0	4321	1.1	459.05	28.0	45.0	38.0	45.0			
	4.0	3284	1.5	348.85	33.0	45.0	38.0	45.0			
	5.3	2491	1.9	264.64	36.0	45.0	38.0	45.0			
	6.1	2156	2.2	228.99	36.0	45.0	38.0	45.0			
	2.6	4711	0.8	1061.93	30.0	45.0	38.0	45.0	PKD 5490 90L2B / 90L2C	212	250-251
	3.0	4131	0.9	931.06	30.0	45.0	38.0	45.0			
	4.0	3122	1.0	703.71	30.0	45.0	38.0	45.0			
	4.8	2576	1.4	580.56	30.0	45.0	38.0	45.0			
	6.1	2037	1.8	459.05	28.0	45.0	38.0	45.0			
	8.0	1548	2.4	348.85	33.0	45.0	38.0	45.0			
	3.1	4405	1.1	289.62	35.0	45.0	38.0	45.0	PKD 5390 100L6C / 100L6D	204	246-247
	3.6	3763	1.3	247.36	36.0	45.0	38.0	45.0			
	4.5	3017	1.7	198.37	37.0	45.0	38.0	44.0			
	5.3	2577	2.0	169.43	37.0	45.0	38.0	42.0			
	6.2	2210	1.7	145.30	37.0	45.0	38.0	41.0			
	7.5	1825	2.8	120.01	37.0	45.0	38.0	39.0			
	4.8	2786	1.7	289.62	35.0	45.0	38.0	45.0	PKD 5390 90L4C / 90L4D	194	246-247
	5.7	2379	2.0	247.36	36.0	45.0	38.0	45.0			
	9.7	1332	2.7	289.62	35.0	45.0	38.0	45.0	PKD 5390 90L2B / 90L2C	194	246-247
	4.4	3058	1.0	204.13	27.0	40.0	28.0	31.0	PKD 4490 100L6C / 100L6D	144	242-243
	5.2	2578	1.1	172.07	17.0	40.0	28.0	30.0			

P_1 [kW]	n_2 [Min^{-1}]	M_2 [Nm]	f_B	i_{ges}	F_R [N]	F_A [N]	$F_{R\,GR}$ [N]	$F_{A\,GR}$ [N]	Tip / Type / Typ IE2 / IE3	Kg	mm
1.50	4.0	3299	0.8	350.42	16.0	40.0	28.0	28.0	PKD 4490 90L4C / 90L4D	134	242-243
	5.0	2626	1.1	278.98	27.0	40.0	28.0	33.0			
	6.9	1922	1.5	204.13	27.0	40.0	28.0	31.0			
	8.1	1620	1.7	172.07	17.0	40.0	28.0	30.0			
	4.9	2519	0.8	567.85	16.0	40.0	28.0	37.0	PKD 4490 90L2B / 90L2C	134	242-243
	6.9	1795	1.2	404.53	16.0	40.0	28.0	31.0			
	8.0	1555	1.4	350.42	16.0	40.0	28.0	28.0			
	10.0	1238	1.7	278.98	27.0	40.0	28.0	33.0			
	13.7	906	2.3	204.13	27.0	40.0	28.0	31.0			
	16.3	763	2.8	172.07	17.0	40.0	28.0	30.0			
	3.8	3572	0.8	234.83	23.0	40.0	28.0	28.0	PKD 4390 100L6C / 100L6D	129	238-239
	4.6	2968	1.0	195.09	25.0	40.0	28.0	27.0			
	5.6	2433	1.2	159.93	27.0	40.0	28.0	24.0			
	6.8	2021	1.5	132.86	27.0	40.0	28.0	23.0			
	7.6	1792	1.4	117.81	27.0	40.0	28.0	25.0			
	9.4	1454	2.0	95.57	28.0	40.0	28.0	24.0			
	10.4	1316	2.2	86.50	23.0	40.0	28.0	24.0			
	11.8	1157	2.5	76.08	23.0	40.0	28.0	22.0			
	13.1	1042	2.8	68.52	23.0	40.0	28.0	21.0			
	4.2	3170	0.9	329.57	18.0	40.0	28.0	28.0	PKD 4390 90L4C / 90L4D	119	238-239
	5.1	2633	1.1	273.80	22.0	40.0	28.0	28.0			
	6.0	2259	1.2	234.83	23.0	40.0	28.0	28.0			
	7.2	1876	1.5	195.09	25.0	40.0	28.0	27.0			
	8.5	1590	0.9	165.34	26.0	40.0	28.0	27.0			
	11.9	1133	2.1	117.81	27.0	40.0	28.0	25.0			
	14.6	919	3.0	95.57	28.0	40.0	28.0	24.0			
	8.5	1515	1.4	329.57	18.0	40.0	28.0	28.0	PKD 4390 90L2B / 90L2C	119	238-239
	10.2	1259	1.7	273.80	22.0	40.0	28.0	28.0			
	11.9	1080	2.0	234.83	23.0	40.0	28.0	28.0			
	14.4	897	2.4	195.09	25.0	40.0	28.0	27.0			
	16.9	760	1.5	165.34	26.0	40.0	28.0	27.0			
	6.5	2025	0.8	215.12	15.0	15.0	-	-	PKD 3490 90L4C / 90L4D	80	234-235
	8.4	1578	1.0	167.59	15.0	15.0	-	-			
	7.9	1566	0.8	353.00	15.0	15.0	14.0	20.0	PKD 3490 90L2B / 90L2C	80	234-235
	10.5	1188	1.0	267.79	15.0	15.0	12.0	17.0			
	13.0	954	1.2	215.12	15.0	15.0	-	-			
	16.7	744	1.6	167.59	15.0	15.0	-	-			
	8.1	1688	1.0	110.94	12.0	15.0	15.0	14.0	PKD 3390 100L6C / 100L6D	82	230-231
	9.6	1425	1.1	93.67	13.0	15.0	15.0	14.0			
	10.7	1280	1.3	84.16	12.0	15.0	15.0	14.0			
	11.9	1155	1.4	75.92	12.0	15.0	15.0	14.0			
	14.0	975	1.7	64.11	12.0	15.0	15.0	13.0			
	15.2	900	1.8	59.15	12.0	15.0	15.0	13.0			
	18.0	760	2.1	49.94	1.0	15.0	15.0	13.0			
	18.9	725	2.2	47.67	1.0	15.0	15.0	13.0			
	22.3	614	2.7	40.37	1.0	15.0	15.0	12.0			
	23.6	579	2.8	38.09	1.0	15.0	15.0	11.0			
	25.2	542	3.0	35.65	1.0	15.0	15.0	11.0			
	7.1	1901	0.8	197.69	1.0	15.0	12.0	14.0	PKD 3390 90L4C / 90L4D	72	230-231
	7.4	1810	0.9	188.22	1.0	15.0	13.0	14.0			
	8.8	1529	1.0	158.92	7.0	15.0	15.0	14.0			
	10.0	1342	1.2	139.49	9.0	15.0	15.0	14.0			
	11.9	1133	1.4	117.78	11.0	15.0	15.0	14.0			
	12.6	1067	1.5	110.94	12.0	15.0	15.0	14.0			
	14.9	901	1.7	93.67	13.0	15.0	15.0	14.0			
	16.6	809	1.9	84.16	12.0	15.0	15.0	14.0			
	18.4	730	2.1	75.92	12.0	15.0	15.0	14.0			
	21.8	617	2.5	64.11	12.0	15.0	15.0	13.0			
	23.7	569	2.7	59.15	12.0	15.0	15.0	13.0			

P_1 [kW]	n_2 [Min^{-1}]	M_2 [Nm]	f_B	i_{ges}	F_R [N]	F_A [N]	$F_{R\,GR}$ [N]	$F_{A\,GR}$ [N]	Tip / Type / Typ IE2 / IE3	Kg	mm
1.50	9.5	1361	0.9	296.10	1.0	15.0	15.0	19.0	PKD 3390 90L2B / 20L2C	72	230-231
	11.2	1149	1.0	250.01	1.0	15.0	14.0	16.0			
	12.0	1076	1.1	234.13	1.0	15.0	15.0	16.0			
	14.2	909	1.3	197.69	1.0	15.0	12.0	14.0			
	14.9	865	1.4	188.22	1.0	15.0	13.0	14.0			
	17.6	731	1.6	158.92	7.0	15.0	15.0	14.0			
	20.1	641	1.8	139.49	9.0	15.0	15.0	14.0			
	23.8	541	2.2	117.78	11.0	15.0	15.0	14.0			
	25.2	510	2.3	110.94	12.0	15.0	15.0	14.0			
	29.9	431	2.7	93.67	13.0	15.0	15.0	14.0			
	33.3	387	3.0	84.16	12.0	15.0	15.0	14.0			
	11.4	1199	0.8	78.85	4.0	12.0	10.0	13.0	PKD 2390 100L6C / 100L6D	62	222-223
	13.5	1011	0.9	66.47	6.0	12.0	11.0	13.0			
	15.5	886	1.0	58.24	7.0	12.0	11.0	13.0			
	17.3	793	1.1	52.11	8.0	12.0	12.0	13.0			
	18.4	745	1.2	48.99	8.0	12.0	12.0	13.0			
	20.1	681	1.3	44.80	8.0	12.0	12.0	13.0			
	22.7	604	1.5	39.70	8.0	12.0	12.0	12.0			
	27.0	506	1.8	33.28	9.0	12.0	12.0	12.0			
	28.6	478	1.8	31.43	9.0	12.0	12.0	12.0			
	30.8	444	2.0	29.22	5.0	12.0	12.0	12.0			
	34.4	398	2.3	26.14	5.0	12.0	12.0	11.0			
	36.6	374	2.4	24.58	5.0	12.0	12.0	11.0			
	40.0	342	2.4	22.48	5.0	12.0	12.0	11.0			
	45.2	303	2.6	19.92	5.0	12.0	12.0	11.0			
	51.4	266	2.8	17.52	5.0	12.0	12.0	10.0			
	55.2	248	2.6	16.29	5.0	12.0	12.0	10.0			
	61.7	222	2.7	14.58	5.0	12.0	12.0	9.0			
	71.8	191	3.0	12.53	5.0	12.0	12.0	9.0			
	14.2	951	0.9	98.92	0.3	12.0	7.0	13.0	PKD 2390 90L4C / 90L4D	52	222-223
	17.8	758	1.1	78.85	4.0	12.0	10.0	13.0			
	21.1	639	1.3	66.47	6.0	12.0	11.0	13.0			
	24.0	560	1.5	58.24	7.0	12.0	11.0	13.0			
	26.9	501	1.7	52.11	8.0	12.0	12.0	13.0			
	28.6	471	1.8	48.99	8.0	12.0	12.0	13.0			
	31.3	431	2.0	44.80	8.0	12.0	12.0	13.0			
	35.3	382	2.3	39.70	8.0	12.0	12.0	12.0			
	42.1	320	2.7	33.28	9.0	12.0	12.0	12.0			
	44.5	302	2.7	31.43	9.0	12.0	12.0	12.0			
	28.3	455	1.4	98.92	0.3	12.0	7.0	13.0	PKD 2390 90L2B / 90L2C	52	222-223
	35.5	363	1.8	78.85	4.0	12.0	10.0	13.0			
	42.1	306	2.1	66.47	6.0	12.0	11.0	13.0			
	48.1	268	2.4	58.24	7.0	12.0	11.0	13.0			
	53.7	240	2.7	52.11	8.0	12.0	12.0	13.0			
	57.2	225	2.9	48.99	8.0	12.0	12.0	13.0			
	17.2	797	0.8	52.42	8.0	20.0	9.0	20.0	PKD G 1390 100L6C / 100L6D	55	214-215
	19.5	702	0.9	46.16	8.0	20.0	9.0	20.0			
	22.0	622	1.0	40.87	9.0	20.0	9.0	20.0			
	25.8	530	1.2	34.86	9.0	20.0	9.0	20.0			
	29.6	463	1.4	30.44	9.0	19.0	9.0	19.0			
	34.2	400	1.6	26.30	9.0	19.0	9.0	19.0			
	38.9	352	1.5	23.16	9.0	19.0	9.0	19.0			
	43.9	312	2.0	20.51	9.0	18.0	9.0	18.0			
	51.5	266	2.1	17.49	7.0	20.0	9.0	16.0			
	58.9	232	2.4	15.27	7.0	20.0	9.0	16.0			
	72.1	190	2.9	12.49	7.0	20.0	9.0	15.0			
	17.2	783	0.8	81.40	7.0	20.0	9.0	20.0	PKD G 1390 90L4C / 90L4D	45	214-215
	19.5	692	0.9	71.94	5.0	20.0	9.0	20.0			
	21.9	616	1.0	64.06	7.0	20.0	9.0	20.0			
	26.7	504	1.2	52.42	8.0	20.0	9.0	20.0			
	30.3	444	1.4	46.16	8.0	20.0	9.0	20.0			
	34.3	393	1.5	40.87	9.0	20.0	9.0	20.0			
	40.2	335	1.8	34.86	9.0	20.0	9.0	20.0			
	46.0	293	2.0	30.44	9.0	19.0	9.0	19.0			
	53.2	253	2.4	26.30	9.0	19.0	9.0	19.0			
	60.4	223	2.3	23.16	9.0	19.0	9.0	19.0			
	68.3	197	2.9	20.51	9.0	18.0	9.0	18.0			

P_1 [kW]	n_2 [Min^{-1}]	M_2 [Nm]	f_B	i_{ges}	F_R [N]	F_A [N]	$F_{R\,GR}$ [N]	$F_{A\,GR}$ [N]	Tip / Type / Typ IE2 / IE3	Kg	mm
1.50	34.4	374	1.2	81.40	7.0	20.0	9.0	20.0	PKD G 1390 90L2B / 90L2C	45	214-215
	38.9	331	1.4	71.94	5.0	20.0	9.0	20.0			
	43.7	295	1.6	64.06	7.0	20.0	9.0	20.0			
	53.4	241	1.9	52.42	8.0	20.0	9.0	20.0			
	60.7	212	2.2	46.16	8.0	20.0	9.0	20.0			
	68.5	188	2.4	40.87	9.0	20.0	9.0	20.0			
	80.3	160	2.8	34.86	9.0	20.0	9.0	20.0			
	25.8	530	0.8	34.86	6.0	20.0	9.0	20.0	PKD 1390 100L6C / 100L6D	54	206-207
	28.6	479	0.9	31.48	6.0	20.0	9.0	20.0			
	32.5	422	1.0	27.72	6.0	19.0	9.0	19.0			
	36.7	373	1.1	24.55	7.0	19.0	9.0	19.0			
	43.0	318	1.3	20.93	7.0	18.0	9.0	18.0			
	51.5	266	1.5	17.49	7.0	16.0	9.0	17.0			
	58.9	232	1.7	15.27	7.0	16.0	9.0	17.0			
	73.3	187	1.2	12.27	7.0	16.0	9.0	16.0			
	82.9	165	1.3	10.86	7.0	15.0	9.0	15.0			
	97.2	141	1.5	9.26	4.0	20.0	9.0	15.0			
	111.2	123	1.5	8.09	4.0	20.0	9.0	14.0			
	25.3	532	0.8	55.26	7.0	20.0	9.0	20.0	PKD 1390 90L4C / 90L4D	44	206-207
	28.6	471	0.9	48.92	3.0	20.0	8.0	20.0			
	33.6	401	1.0	41.72	5.0	20.0	8.0	20.0			
	40.2	335	1.2	34.86	6.0	20.0	9.0	20.0			
	44.5	303	1.3	31.48	6.0	20.0	9.0	20.0			
	50.5	267	1.5	27.72	6.0	19.0	9.0	19.0			
	57.0	236	1.7	24.55	7.0	19.0	9.0	19.0			
	66.9	201	2.0	20.93	7.0	18.0	9.0	18.0			
	114.1	118	1.9	12.27	7.0	16.0	9.0	16.0			
	128.9	104	1.9	10.86	7.0	15.0	9.0	15.0			
	32.5	396	0.8	86.12	7.0	20.0	8.0	20.0	PKD 1390 90L2B / 90L2C	44	206-207
	36.5	353	0.9	76.68	7.0	20.0	9.0	20.0			
	44.6	288	1.1	62.74	7.0	20.0	8.0	20.0			
	50.7	254	1.2	55.26	7.0	20.0	9.0	20.0			
	57.2	225	1.4	48.92	3.0	20.0	8.0	20.0			
	67.1	192	1.6	41.72	5.0	20.0	8.0	20.0			
	80.3	160	1.9	34.86	6.0	20.0	9.0	20.0			
	88.9	145	2.1	31.48	6.0	20.0	9.0	20.0			
	101.0	127	2.4	27.72	6.0	19.0	9.0	19.0			
	114.1	113	2.7	24.55	7.0	19.0	9.0	19.0			
	228.2	56	3.0	12.27	7.0	16.0	9.0	16.0			
	257.8	50	3.0	10.86	7.0	15.0	9.0	15.0			
	24.6	565	1.2	36.59	7.3	12.0	-	-	PKD H 5290 100L6C / 100L6D	63	202-203
	28.1	494	1.3	32.02	7.7	12.0	-	-			
	31.6	440	1.4	28.46	7.7	12.0	-	-			
	35.5	392	1.7	25.37	7.2	12.0	-	-			
	40.5	343	1.9	22.20	7.2	12.0	-	-			
	45.6	305	2.1	19.73	7.2	12.0	-	-			
	50.4	275	2.2	17.84	7.2	12.0	-	-			
	57.7	241	2.5	15.61	7.2	12.0	-	-			
	64.8	214	2.6	13.88	7.2	12.0	-	-			
	72.6	191	2.8	12.40	7.2	12.0	-	-			
	26.7	515	1.1	52.42	6.2	12.0	-	-	PKD H 5290 90L4C / 90L4D	53	202-203
	30.5	450	1.1	45.86	6.2	12.0	-	-			
	34.3	400	1.1	40.77	7.0	12.0	-	-			
	38.3	359	1.8	36.59	7.3	12.0	-	-			
	43.7	315	2.0	32.02	7.7	12.0	-	-			
	49.2	280	2.1	28.46	7.7	12.0	-	-			
	53.4	250	1.7	52.42	6.2	12.0	-	-	PKD H 5290 90L2B / 90L2C	53	202-203
	61.1	218	1.8	45.86	6.2	12.0	-	-			
	68.7	194	1.8	40.77	7.0	12.0	-	-			
	76.5	174	2.9	36.59	7.3	12.0	-	-			

P_1 [kW]	n_2 [Min^{-1}]	M_2 [Nm]	f_B	i_{ges}	F_R [N]	F_A [N]	$F_{R\,GR}$ [N]	$F_{A\,GR}$ [N]	Tip / Type / Typ IE2 / IE3	Kg	mm
1.50	26.4	527	0.8	34.15	4.4	12.0	-	-	PKD F 4290 100L6C / 100L6D	51	198-199
	30.1	461	0.8	29.88	4.9	12.0	-	-			
	33.9	410	0.8	26.56	5.2	12.0	-	-			
	38.7	359	1.1	23.26	5.9	12.0	-	-			
	44.2	314	1.1	20.35	5.9	12.0	-	-			
	49.8	279	1.2	18.09	5.9	12.0	-	-			
	56.0	248	1.6	16.08	5.9	12.0	-	-			
	64.0	217	1.6	14.07	5.9	12.0	-	-			
	71.3	195	1.8	12.63	6.0	12.0	-	-			
	82.0	170	2.1	10.98	4.3	12.0	-	-			
	92.2	151	2.2	9.76	4.3	12.0	-	-			
	103.8	134	2.5	8.67	4.3	12.0	-	-			
	116.7	119	2.7	7.71	4.3	12.0	-	-			
	132.4	105	2.9	6.80	4.3	12.0	-	-			
	29.2	472	0.8	48.01	0.9	12.0	-	-	PKD F 4290 90L4C / 90L4D	41	198-199
	33.3	413	0.8	42.01	3.1	12.0	-	-			
	37.5	367	0.9	37.34	3.9	12.0	-	-			
	41.0	335	1.1	34.15	4.4	12.0	-	-			
	46.9	294	1.2	29.88	4.9	12.0	-	-			
	52.7	261	1.3	26.56	5.2	12.0	-	-			
	87.1	158	2.3	16.08	5.9	12.0	-	-			
	99.5	138	2.5	14.07	5.9	12.0	-	-			
	110.8	124	2.7	12.63	6.0	12.0	-	-			
	58.3	229	1.2	48.01	0.9	12.0	-	-	PKD F 4290 90L2B / 90L2C	41	198-199
	66.7	200	1.3	42.01	3.1	12.0	-	-			
	75.0	178	1.4	37.34	3.9	12.0	-	-			
	82.0	163	1.8	34.15	4.4	12.0	-	-			
	93.7	142	1.8	29.88	4.9	12.0	-	-			
	105.4	127	2.0	26.56	5.2	12.0	-	-			
	46.9	296	0.8	19.19	3.7	9.0	-	-	PKD C 1290 100L6C / 100L6D	42	194-195
	52.8	263	0.9	17.06	4.0	9.0	-	-			
	69.3	201	1.0	12.99	4.3	9.0	-	-			
	79.2	176	1.2	11.37	4.4	9.0	-	-			
	83.3	167	1.1	10.81	4.4	9.0	-	-			
	95.0	146	1.3	9.47	4.5	9.0	-	-			
	108.6	128	1.4	8.29	4.6	8.8	-	-			
	123.5	113	1.5	7.29	4.6	8.4	-	-			
	138.9	100	1.7	6.48	4.6	8.1	-	-			
	150.8	92	1.8	5.97	4.7	7.8	-	-			
	169.5	82	1.9	5.31	4.7	7.5	-	-			
	51.2	269	0.9	27.36	2.2	9.0	-	-	PKD C 1290 90L4C / 90L4D	32	194-195
	57.6	239	0.9	24.32	2.9	9.0	-	-			
	63.8	216	0.9	21.94	3.4	9.0	-	-			
	73.0	189	1.2	19.19	3.7	9.0	-	-			
	82.1	168	1.4	17.06	4.0	9.0	-	-			
	95.5	144	1.3	14.66	4.2	9.0	-	-			
	107.8	128	1.5	12.99	4.3	9.0	-	-			
	123.1	112	1.7	11.37	4.4	9.0	-	-			
	129.5	106	1.7	10.81	4.4	9.0	-	-			
	147.8	93	1.9	9.47	4.5	9.0	-	-			
	168.9	81	2.1	8.29	4.6	8.8	-	-			
	192.0	72	2.3	7.29	4.6	8.4	-	-			
	216.0	64	2.5	6.48	4.6	8.1	-	-			
	234.5	59	2.6	5.97	4.7	7.8	-	-			
	263.7	52	2.8	5.31	4.7	7.5	-	-			
	89.5	149	1.0	31.27	2.2	9.0	-	-	PKD C 1290 90L2B / 90L2C	32	194-195
	102.3	130	1.3	27.36	2.2	9.0	-	-			
	115.1	116	1.4	24.32	2.9	9.0	-	-			
	127.6	105	1.4	21.94	3.4	9.0	-	-			
	145.9	91	1.9	19.19	3.7	9.0	-	-			
	164.1	81	2.2	17.06	4.0	9.0	-	-			
	191.0	70	2.1	14.66	4.2	9.0	-	-			
	215.6	62	2.4	12.99	4.3	9.0	-	-			
	246.3	54	2.7	11.37	4.4	9.0	-	-			
	259.0	52	2.7	10.81	4.4	9.0	-	-			
	295.7	45	2.9	9.47	4.5	9.0	-	-			

P_1 [kW]	n_2 [Min^{-1}]	M_2 [Nm]	f_B	i_{ges}	F_R [N]	F_A [N]	$F_{R\,GR}$ [N]	$F_{A\,GR}$ [N]	Tip / Type / Typ IE2 / IE3	Kg	mm
1.50	89.6	153	0.8	15.62	-	-	-	-	PKD B 0290 90L4C / 90L4D	25	190-191
	103.9	132	0.9	13.48	-	-	-	-			
	118.7	116	1.0	11.79	-	-	-	-			
	135.3	102	1.1	10.35	2.7	5.6	-	-			
	154.5	89	1.2	9.06	2.9	5.6	-	-			
	175.0	79	1.3	8.00	3.0	5.4	-	-			
	198.6	69	1.4	7.05	3.1	5.2	-	-			
	231.8	59	1.5	6.04	3.2	5.0	-	-			
	262.2	52	1.6	5.34	3.2	4.7	-	-			
	293.5	47	1.7	4.77	3.2	4.6	-	-			
	340.6	40	1.9	4.11	3.1	4.3	-	-			
	123.1	108	0.8	22.74	2.7	5.6	-	-	PKD B 0290 90L2B / 90L2C	25	190-191
	207.7	64	1.4	13.48	2.7	5.6	-	-			
	237.5	56	1.6	11.79	2.7	5.6	-	-			
	270.5	49	1.7	10.35	2.7	5.6	-	-			
	309.1	43	1.8	9.06	2.9	5.6	-	-			
	350.0	38	2.0	8.00	3.0	5.4	-	-			
	397.2	34	2.1	7.05	3.1	5.2	-	-			
	463.6	29	2.4	6.04	3.2	5.0	-	-			
	524.3	25	2.5	5.34	3.2	4.7	-	-			
	587.0	23	2.7	4.77	3.2	4.6	-	-			
	681.3	20	2.9	4.11	3.1	4.3	-	-			
2.20	0.3	68442	0.8	3210.12	-	-	-	-	PKD G 9390/63 112M6C / 112M6D	1806	282
	0.3	57119	0.9	2679.06	-	-	-	-			
	0.4	49384	1.1	2316.27	-	-	-	-			
	0.4	43752	1.2	2052.10	-	-	-	-			
	0.5	37827	1.4	1774.21	-	-	-	-			
	0.3	58655	0.9	4441.42	-	-	-	-	PKD G 9390/63 100L4B / 100L4C	1798	282
	0.4	48764	1.0	3692.48	-	-	-	-			
	0.4	42394	1.2	3210.12	-	-	-	-			
	0.5	35380	1.4	2679.06	-	-	-	-			
	0.6	30589	1.6	2316.27	-	-	-	-			
	0.7	27101	1.8	2052.10	-	-	-	-			
	0.8	23431	2.1	1774.21	-	-	-	-			
	0.3	50333	0.8	8306.57	-	-	-	-	PKD G 9390/63 90L2D	1788	282
	0.4	47520	0.8	7842.34	-	-	-	-			
	0.4	40638	0.9	6706.55	-	-	-	-			
	0.5	33785	1.1	5575.65	-	-	-	-			
	0.6	26912	1.4	4441.42	-	-	-	-			
	0.8	22374	1.7	3692.48	-	-	-	-			
	0.9	19452	2.0	3210.12	-	-	-	-			
	1.0	16234	2.3	2679.06	-	-	-	-			
	1.2	14035	2.7	2316.27	-	-	-	-			
	0.6	35145	1.5	1623.67	-	-	-	-	PKD G 9390/62 112M6C / 112M6D	1808	282
	0.7	29305	1.8	1353.86	-	-	-	-			
	0.8	25222	2.1	1165.22	-	-	-	-			
	0.9	21198	2.5	979.31	-	-	-	-			
	1.1	17675	3.0	816.57	-	-	-	-			
	0.9	21930	2.3	1623.67	-	-	-	-	PKD G 9390/62 100L4B / 100L4C	1800	282
	1.0	18286	2.7	1353.86	-	-	-	-			
	0.5	38856	0.9	1795.13	144.0	70.0	-	-	PKD 9390/52 112M6C / 112M6D	1508	280
	0.6	30836	1.1	1424.59	144.0	70.0	160.0	70.0			
	0.8	24228	1.4	1119.32	150.0	70.0	160.0	70.0			
	1.1	18312	1.8	846.00	154.0	70.0	160.0	70.0			
	1.3	15293	2.2	706.54	152.0	70.0	160.0	70.0			
	1.5	13198	2.5	609.75	152.0	70.0	160.0	70.0			
	0.7	28557	1.1	2114.30	-	-	-	-	PKD 9390/52 100L4B / 100L4C	1500	280
	0.8	24246	1.3	1795.13	-	-	-	-			
	1.0	19241	1.7	1424.59	144.0	70.0	160.0	70.0			
	1.3	15118	2.1	1119.32	150.0	70.0	160.0	70.0			
	1.7	11426	2.8	846.00	154.0	70.0	160.0	70.0			

P_1 [kW]	n_2 [Min^{-1}]	M_2 [Nm]	f_B	i_{ges}	F_R [N]	F_A [N]	$F_{R\,GR}$ [N]	$F_{A\,GR}$ [N]	Tip / Type / Typ IE2 / IE3	Kg	mm
2.20	0.6	30978	0.8	4933.39	144.0	70.0	-	-	PKD 9390/52 90L2D	1490	280
	0.8	22325	0.9	3555.41	144.0	70.0	-	-			
	1.0	18294	1.1	2913.46	144.0	70.0	-	-			
	1.3	13276	1.8	2114.30	144.0	70.0	-	-			
	1.6	11272	2.2	1795.13	144.0	70.0	-	-			
	2.0	8945	2.7	1424.59	144.0	70.0	160.0	70.0			
	0.7	26055	0.8	1203.73	103.0	65.0	120.0	65.0	PKD G 8390/52 112M6C / 112M6D	938	280
	1.0	19693	1.1	909.80	112.0	65.0	120.0	65.0			
	1.3	15473	1.4	714.84	116.0	65.0	120.0	65.0			
	1.4	13499	1.6	623.65	118.0	65.0	120.0	65.0			
	2.1	9415	2.2	434.96	109.0	120.0	120.0	65.0			
	2.4	8214	2.6	379.47	109.0	120.0	120.0	65.0			
	1.0	19763	0.9	1463.24	92.0	65.0	120.0	65.0	PKD G 8390/52 100L4B / 100L4C	930	280
	1.2	16258	1.1	1203.73	103.0	65.0	120.0	65.0			
	1.5	12288	1.5	909.80	112.0	65.0	120.0	65.0			
	2.0	9655	1.9	714.84	116.0	65.0	120.0	65.0			
	2.2	8423	2.1	623.65	118.0	65.0	120.0	65.0			
	0.9	18956	0.8	3018.87	92.0	65.0	-	-	PKD G 8390/52 90L2D	920	280
	1.3	13275	1.1	2114.13	92.0	65.0	-	-			
	1.6	11218	1.4	1786.51	92.0	65.0	-	-			
	1.9	9188	1.7	1463.24	92.0	65.0	120.0	65.0			
	2.3	7558	2.0	1203.73	103.0	65.0	120.0	65.0			
	3.1	5713	2.7	909.80	112.0	65.0	120.0	65.0			
	3.7	5334	2.6	246.45	95.0	60.0	95.0	60.0	PKD 8390/52 112M6C / 112M6D	688	280
	1.3	15261	0.9	705.03	88.0	60.0	95.0	60.0	PKD 8390/42 112M6C / 112M6D	663	280
	1.5	13050	1.0	602.92	91.0	60.0	95.0	60.0			
	2.0	9618	1.4	444.35	94.0	60.0	95.0	60.0			
	2.4	8225	1.7	379.99	95.0	60.0	95.0	60.0			
	3.1	6191	2.2	286.02	78.0	60.0	95.0	60.0			
	1.4	13749	0.9	1017.96	78.0	60.0	95.0	60.0	PKD 8390/42 100L4B / 100L4C	655	280
	1.7	11418	1.1	845.40	85.0	60.0	95.0	60.0			
	2.0	9522	1.4	705.03	88.0	60.0	95.0	60.0			
	2.3	8143	1.6	602.92	91.0	60.0	95.0	60.0			
	3.2	6002	2.2	444.35	94.0	60.0	95.0	60.0			
	3.7	5132	2.5	379.99	95.0	60.0	95.0	60.0			
	1.4	12853	0.8	2046.84	78.0	60.0	-	-	PKD 8390/42 90L2D	645	280
	1.5	11378	0.9	1812.03	78.0	60.0	-	-			
	1.9	9215	1.1	1467.49	78.0	60.0	95.0	60.0			
	2.8	6392	1.5	1017.96	78.0	60.0	95.0	60.0			
	3.3	5308	1.9	845.40	85.0	60.0	95.0	60.0			
	4.0	4427	2.2	705.03	88.0	60.0	95.0	60.0			
	4.6	3786	2.6	602.92	91.0	60.0	95.0	60.0			
	3.3	5832	1.5	269.43	64.0	50.0	66.0	50.0	PKD 7390/42 112M6C / 112M6D	403	278
	4.6	4249	1.8	196.30	64.0	50.0	66.0	50.0			
	5.7	3399	2.0	157.05	65.0	50.0	66.0	49.0			
	6.7	2907	2.2	134.31	37.0	50.0	66.0	46.0			
	5.2	3639	2.3	269.43	64.0	50.0	66.0	50.0	PKD 7390/42 100L4B / 100L4C	395	278
	7.1	2651	2.8	196.30	64.0	50.0	66.0	50.0			
	8.9	2121	3.0	157.05	65.0	50.0	66.0	49.0			
	1.9	10193	0.9	470.91	57.0	50.0	66.0	50.0	PKD 7390/32 112M6C / 112M6D	386	278
	2.3	8328	1.1	384.74	60.0	50.0	66.0	50.0			
	2.9	6712	1.3	310.09	62.0	50.0	66.0	50.0			
	1.8	10334	0.8	765.14	38.0	50.0	66.0	50.0	PKD 7390/32 100L4B / 100L4C	378	278
	2.3	8051	1.1	596.10	51.0	50.0	66.0	50.0			
	3.0	6360	1.3	470.91	57.0	50.0	66.0	50.0			
	3.6	5196	1.6	384.74	60.0	50.0	66.0	50.0			
	4.5	4188	2.0	310.09	62.0	50.0	66.0	50.0			

P_1 [kW]	n_2 [Min^{-1}]	M_2 [Nm]	f_B	i_{ges}	F_R [N]	F_A [N]	$F_{R\,GR}$ [N]	$F_{A\,GR}$ [N]	Tip / Type / Typ IE2 / IE3	Kg	mm
2.20	2.4 2.9 3.7 4.7 5.9 7.3	7323 6106 4804 3743 2957 2416	0.9 1.1 1.3 1.7 2.2 2.7	1166.22 972.42 765.14 596.10 470.91 384.74	38.0 38.0 38.0 51.0 57.0 60.0	50.0 50.0 50.0 50.0 50.0 50.0	66.0 66.0 66.0 66.0 66.0 66.0	50.0 50.0 50.0 50.0 50.0 50.0	PKD 7390/32 90L2D	368	278
	3.7 4.3 6.6	5478 4618 3049	1.6 1.9 2.3	245.55 206.98 136.65	64.0 64.0 65.0	50.0 50.0 50.0	66.0 66.0 66.0	50.0 50.0 50.0	PKD 7390 112M6C / 112M6D	352	258-259
	5.7 6.8	3464 2920	2.5 2.9	245.55 206.98	64.0 64.0	50.0 50.0	66.0 66.0	50.0 50.0	PKD 7390 100L4B / 100L4C	344	258-259
	3.5 4.8 6.0 7.0	5592 4074 3260 2788	1.5 1.9 2.0 2.3	258.36 188.23 150.60 128.79	63.0 64.0 65.0 42.0	50.0 50.0 50.0 45.0	66.0 66.0 66.0 66.0	50.0 50.0 50.0 50.0	PKD 6390/42 112M6C / 112M6D	403	278
	5.4 7.4 9.3	3490 2542 2034	2.3 2.8 3.0	258.36 188.23 150.60	63.0 64.0 65.0	50.0 50.0 50.0	66.0 66.0 66.0	50.0 50.0 50.0	PKD 6390/42 100L4B / 100L4C	395	278
	2.0 2.4 3.0	9774 7986 6436	0.9 1.1 1.3	451.55 368.93 297.35	58.0 60.0 62.0	50.0 50.0 50.0	66.0 66.0 66.0	50.0 50.0 50.0	PKD 6390/32 112M6C / 112M6D	386	278
	1.9 2.4 3.1 3.8 4.7	9910 7720 6099 4983 4016	0.8 1.1 1.3 1.6 2.0	733.69 571.60 451.55 368.93 297.35	43.0 52.0 58.0 60.0 62.0	50.0 50.0 50.0 50.0 50.0	66.0 66.0 66.0 66.0 66.0	50.0 50.0 50.0 50.0 50.0	PKD 6390/32 100L4B / 100L4C	378	278
	2.5 3.0 3.8 4.9 6.2 7.6	7022 5855 4607 3589 2835 2317	0.9 1.1 1.4 1.7 2.2 2.7	1118.29 932.46 733.69 571.60 451.55 368.93	43.0 43.0 43.0 52.0 58.0 60.0	50.0 50.0 50.0 50.0 50.0 50.0	66.0 66.0 66.0 66.0 66.0 66.0	50.0 50.0 50.0 50.0 50.0 50.0	PKD 6390/32 90L2D	368	278
	3.8 4.5 7.0	5253 4422 2886	1.6 1.9 2.4	235.45 198.23 129.36	61.0 64.0 64.0	50.0 50.0 50.0	66.0 66.0 66.0	50.0 50.0 50.0	PKD 6390 112M6C / 112M6D	352	254-255
	5.9 7.1	3321 2796	2.5 2.9	235.45 198.23	61.0 64.0	50.0 50.0	66.0 66.0	50.0 50.0	PKD 6390 100L4B / 100L4C	344	254-255
	3.4 3.9 5.5	5815 5032 3626	0.9 1.0 1.4	264.64 228.99 165.02	36.0 18.0 38.0	45.0 45.0 45.0	38.0 38.0 38.0	45.0 45.0 44.0	PKD 5490 112M6C / 112M6D	230	250-251
	4.0 5.3 6.1 8.5	4816 3654 3162 2278	1.0 1.3 1.5 2.1	348.85 264.64 228.99 165.02	26.0 36.0 18.0 38.0	45.0 45.0 45.0 45.0	38.0 38.0 38.0 38.0	45.0 45.0 45.0 45.0	PKD 5490 100L4B / 100L4C	222	250-251
	4.8 6.1 8.0 10.6 12.2	3778 2987 2270 1722 1490	1.0 1.2 1.6 2.1 2.4	580.56 459.05 348.85 264.64 228.99	26.0 26.0 26.0 36.0 18.0	45.0 45.0 45.0 45.0 45.0	38.0 38.0 38.0 38.0 38.0	45.0 45.0 45.0 45.0 45.0	PKD 5490 90L2D	212	250-251
	3.1 3.6 4.5 5.3 6.2 7.5 8.8 10.2	6461 5519 4426 3780 3242 2677 2287 1966	0.8 0.9 1.1 1.3 1.2 1.9 2.2 2.6	289.62 247.36 198.37 169.43 145.30 120.01 102.50 88.12	31.0 33.0 35.0 36.0 37.0 37.0 35.0 35.0	45.0 45.0 45.0 45.0 45.0 45.0 45.0 45.0	38.0 38.0 38.0 38.0 38.0 38.0 38.0 38.0	45.0 45.0 44.0 42.0 41.0 39.0 38.0 36.0	PKD 5390 112M6C / 112M6D	212	246-247

P_1 [kW]	n_2 [Min^{-1}]	M_2 [Nm]	f_B	i_{ges}	F_R [N]	F_A [N]	$F_{R\,GR}$ [N]	$F_{A\,GR}$ [N]	Tip / Type / Typ IE2 / IE3	Kg	mm
2.20	4.8	4086	1.2	289.62	31.0	45.0	38.0	45.0	PKD 5390 100L4B / 100L4C	204	246-247
	5.7	3489	1.4	247.36	33.0	45.0	38.0	45.0			
	7.1	2798	1.7	198.37	35.0	45.0	38.0	44.0			
	8.3	2390	2.0	169.43	36.0	45.0	38.0	42.0			
	9.6	2050	2.3	145.30	37.0	45.0	38.0	41.0			
	11.7	1693	2.8	120.01	37.0	45.0	38.0	39.0			
	9.7	1953	1.9	289.62	31.0	45.0	38.0	45.0	PKD 5390 90L2D	194	246-247
	11.3	1668	2.2	247.36	33.0	45.0	38.0	45.0			
	19.3	980	2.8	145.30	37.0	45.0	38.0	41.0			
	5.2	3781	0.8	172.07	17.0	40.0	28.0	20.0	PKD 4490 112M6C / 112M6D	152	242-243
	6.9	2818	1.0	204.13	27.0	40.0	-	-	PKD 4490 100L4B / 100L4C	144	242-243
	8.1	2376	1.2	172.07	17.0	40.0	28.0	20.0			
	6.9	2632	0.8	404.53	27.0	40.0	28.0	31.0	PKD 4490 90L2D	134	242-243
	8.0	2280	0.9	350.42	27.0	40.0	28.0	28.0			
	10.0	1815	1.2	278.98	27.0	40.0	-	-			
	13.7	1328	1.6	204.13	27.0	40.0	-	-			
	16.3	1120	1.9	172.07	17.0	40.0	28.0	20.0			
	5.6	3568	0.8	159.93	24.0	40.0	28.0	24.0	PKD 4390 112M6C / 112M6D	137	238-239
	6.8	2964	1.0	132.86	25.0	40.0	28.0	23.0			
	7.6	2628	1.0	117.81	26.0	40.0	28.0	23.0			
	9.4	2132	1.4	95.57	27.0	40.0	28.0	23.0			
	10.4	1930	1.5	86.50	27.0	40.0	28.0	22.0			
	11.8	1697	1.7	76.08	27.0	40.0	28.0	22.0			
	13.1	1529	1.9	68.52	28.0	40.0	28.0	21.0			
	14.2	1410	2.1	63.21	18.0	40.0	28.0	21.0			
	16.2	1242	2.4	55.67	18.0	40.0	28.0	21.0			
	18.9	1062	2.8	47.61	18.0	40.0	28.0	19.0			
	6.0	3313	0.8	234.83	17.0	40.0	28.0	23.0	PKD 4390 100L4B / 100L4C	129	238-239
	7.2	2752	1.0	195.09	21.0	40.0	28.0	23.0			
	8.8	2256	1.2	159.93	24.0	40.0	28.0	24.0			
	10.5	1874	1.5	132.86	25.0	40.0	28.0	23.0			
	11.9	1662	1.4	117.81	26.0	40.0	28.0	23.0			
	14.6	1348	2.1	95.57	27.0	40.0	28.0	23.0			
	16.2	1220	2.3	86.50	27.0	40.0	28.0	22.0			
	18.4	1073	2.6	76.08	27.0	40.0	28.0	22.0			
	20.4	967	2.9	68.52	28.0	40.0	28.0	21.0			
	8.5	2222	1.0	329.57	17.0	40.0	28.0	28.0	PKD 4390 90L2D	119	238-239
	10.2	1846	1.2	273.80	17.0	40.0	28.0	28.0			
	11.9	1583	1.3	234.83	17.0	40.0	28.0	23.0			
	14.4	1315	1.6	195.09	21.0	40.0	28.0	23.0			
	16.9	1115	1.0	165.34	24.0	40.0	28.0	27.0			
	23.8	794	2.3	117.81	26.0	40.0	28.0	23.0			
	13.0	1400	0.8	215.12	15.0	15.0	-	-	PKD 3490 90L2D	80	234-235
	16.7	1090	1.1	167.59	15.0	15.0	-	-			
	9.6	2090	0.8	93.67	10.0	15.0	15.0	12.0	PKD 3390 112M6C / 112M6D	90	230-231
	10.7	1878	0.9	84.16	11.0	15.0	15.0	12.0			
	11.9	1694	1.0	75.92	11.0	15.0	15.0	12.0			
	14.0	1430	1.1	64.11	11.0	15.0	15.0	12.0			
	15.2	1320	1.2	59.15	11.0	15.0	15.0	12.0			
	18.0	1114	1.5	49.94	10.0	15.0	15.0	12.0			
	18.9	1063	1.5	47.67	10.0	15.0	15.0	12.0			
	22.3	901	1.8	40.37	10.0	15.0	15.0	11.0			
	23.6	850	1.9	38.09	10.0	15.0	15.0	11.0			
	25.2	795	2.0	35.65	1.0	15.0	15.0	11.0			
	30.3	662	2.4	29.67	1.0	15.0	15.0	11.0			
	35.9	559	2.8	25.06	1.0	15.0	15.0	10.0			
	37.6	534	3.0	23.92	1.0	15.0	15.0	10.0			

P_1 [kW]	n_2 [Min^{-1}]	M_2 [Nm]	f_B	i_{ges}	F_R [N]	F_A [N]	$F_{R\,GR}$ [N]	$F_{A\,GR}$ [N]	Tip / Type / Typ IE2 / IE3	Kg	mm
2.20	12.6	1565	1.0	110.94	7.0	15.0	15.0	12.0	PKD 3390 100L4B / 100L4C	82	230-231
	14.9	1321	1.2	93.67	10.0	15.0	15.0	12.0			
	16.6	1187	1.3	84.16	11.0	15.0	15.0	12.0			
	18.4	1071	1.4	75.92	11.0	15.0	15.0	12.0			
	21.8	904	1.7	64.11	11.0	15.0	15.0	12.0			
	23.7	834	1.9	59.15	11.0	15.0	15.0	12.0			
	28.0	704	2.2	49.94	10.0	15.0	15.0	12.0			
	29.4	672	2.3	47.67	10.0	15.0	15.0	12.0			
	34.7	569	2.7	40.37	10.0	15.0	15.0	11.0			
	36.8	537	2.9	38.09	10.0	15.0	15.0	11.0			
	14.2	1333	0.9	197.69	7.0	15.0	12.0	14.0	PKD 3390 90L2D	72	230-231
	14.9	1269	0.9	188.22	7.0	15.0	13.0	14.0			
	17.6	1072	1.1	158.92	7.0	15.0	15.0	14.0			
	20.1	941	1.3	139.49	7.0	15.0	15.0	14.0			
	23.8	794	1.5	117.78	7.0	15.0	15.0	14.0			
	25.2	748	1.6	110.94	7.0	15.0	15.0	12.0			
	29.9	632	1.9	93.67	10.0	15.0	15.0	12.0			
	33.3	567	2.1	84.16	11.0	15.0	15.0	12.0			
	36.9	512	2.3	75.92	11.0	15.0	15.0	12.0			
	43.7	432	2.7	64.11	11.0	15.0	15.0	12.0			
	47.3	399	3.0	59.15	11.0	15.0	15.0	12.0			
	17.3	1163	0.8	52.11	5.0	12.0	10.0	11.0	PKD 2390 112M6C / 112M6D	70	222-223
	18.4	1093	0.8	48.99	5.0	12.0	10.0	11.0			
	20.1	999	0.9	44.80	6.0	12.0	11.0	11.0			
	22.7	886	1.0	39.70	7.0	12.0	11.0	11.0			
	27.0	742	1.2	33.28	8.0	12.0	12.0	11.0			
	28.6	701	1.2	31.43	8.0	12.0	12.0	11.0			
	30.8	652	1.4	29.22	8.0	12.0	12.0	11.0			
	34.4	583	1.5	26.14	8.0	12.0	12.0	11.0			
	36.6	548	1.6	24.58	8.0	12.0	12.0	10.0			
	40.0	502	1.6	22.48	8.0	12.0	12.0	10.0			
	45.2	444	1.8	19.92	8.0	12.0	12.0	10.0			
	51.4	391	1.9	17.52	8.0	12.0	12.0	10.0			
	55.2	363	1.8	16.29	8.0	12.0	12.0	10.0			
	61.7	325	1.9	14.58	8.0	12.0	12.0	9.0			
	71.8	280	2.0	12.53	3.0	12.0	12.0	9.0			
	81.0	248	2.2	11.11	3.0	12.0	12.0	9.0			
	102.4	196	2.6	8.79	3.0	12.0	12.0	8.0			
	17.8	1112	0.8	78.85	4.0	12.0	10.0	13.0	PKD 2390 100L4B / 100L4C	62	222-223
	21.1	938	0.9	66.47	0.4	12.0	8.0	11.0			
	24.0	822	1.0	58.24	2.0	12.0	9.0	11.0			
	26.9	735	1.2	52.11	5.0	12.0	10.0	11.0			
	28.6	691	1.2	48.99	5.0	12.0	10.0	11.0			
	31.3	632	1.4	44.80	6.0	12.0	11.0	11.0			
	35.3	560	1.5	39.70	7.0	12.0	11.0	11.0			
	42.1	469	1.8	33.28	8.0	12.0	12.0	11.0			
	44.5	443	1.8	31.43	8.0	12.0	12.0	11.0			
	47.9	412	2.1	29.22	8.0	12.0	12.0	11.0			
	53.6	369	2.3	26.14	8.0	12.0	12.0	11.0			
	57.0	347	2.5	24.58	8.0	12.0	12.0	10.0			
	62.3	317	2.5	22.48	8.0	12.0	12.0	10.0			
	70.3	281	2.7	19.92	8.0	12.0	12.0	10.0			
	79.9	247	2.9	17.52	8.0	12.0	12.0	10.0			
	85.9	230	2.7	16.29	8.0	12.0	12.0	10.0			
	96.0	206	2.8	14.58	8.0	12.0	12.0	9.0			
	28.3	667	1.0	98.92	4.0	12.0	7.0	13.0	PKD 2390 90L2D	52	222-223
	35.5	532	1.2	78.85	4.0	12.0	10.0	13.0			
	42.1	448	1.5	66.47	4.0	12.0	8.0	11.0			
	48.1	393	1.7	58.24	2.0	12.0	9.0	11.0			
	53.7	351	1.9	52.11	5.0	12.0	10.0	11.0			
	57.2	330	2.0	48.99	5.0	12.0	10.0	11.0			
	62.5	302	2.2	44.80	6.0	12.0	11.0	11.0			
	70.5	268	2.4	39.70	7.0	12.0	11.0	11.0			
	84.1	224	2.9	33.28	8.0	12.0	12.0	11.0			
	89.1	212	2.9	31.43	8.0	12.0	12.0	11.0			

P_1 [kW]	n_2 [Min^{-1}]	M_2 [Nm]	f_B	i_{ges}	F_R [N]	F_A [N]	$F_{R\,GR}$ [N]	$F_{A\,GR}$ [N]	Tip / Type / Typ IE2 / IE3	Kg	mm
2.20	25.8	778	0.8	34.86	8.0	18.0	9.0	18.0	PKD G 1390 112M6C / 112M6D	63	214-215
	29.6	679	0.9	30.44	9.0	18.0	9.0	18.0			
	34.2	587	1.1	26.30	9.0	18.0	9.0	18.0			
	38.9	517	1.1	23.16	9.0	17.0	9.0	17.0			
	43.9	458	1.3	20.51	9.0	17.0	9.0	17.0			
	51.5	390	1.5	17.49	9.0	16.0	9.0	16.0			
	58.9	341	1.6	15.27	9.0	16.0	9.0	16.0			
	72.1	279	2.0	12.49	9.0	15.0	9.0	15.0			
	26.7	739	0.8	52.42	5.0	19.0	9.0	19.0	PKD G 1390 100L4B / 100L4C	55	214-215
	30.3	651	0.9	46.16	7.0	18.0	9.0	18.0			
	34.3	577	1.0	40.87	7.0	18.0	9.0	18.0			
	40.2	492	1.2	34.86	8.0	18.0	9.0	18.0			
	46.0	429	1.4	30.44	9.0	18.0	9.0	18.0			
	53.2	371	1.6	26.30	9.0	18.0	9.0	18.0			
	60.4	327	1.6	23.16	9.0	17.0	9.0	17.0			
	68.3	289	2.0	20.51	9.0	17.0	9.0	17.0			
	80.0	247	2.2	17.49	9.0	16.0	9.0	16.0			
	91.7	215	2.4	15.27	9.0	16.0	9.0	16.0			
	112.1	176	3.0	12.49	9.0	15.0	9.0	15.0			
	34.4	549	0.8	81.40	5.0	19.0	9.0	20.0	PKD G 1390 90L2D	45	214-215
	38.9	485	0.9	71.94	5.0	19.0	9.0	20.0			
	43.7	432	1.1	64.06	5.0	19.0	9.0	20.0			
	53.4	353	1.3	52.42	5.0	19.0	9.0	19.0			
	60.7	311	1.5	46.16	7.0	18.0	9.0	18.0			
	68.5	276	1.7	40.87	7.0	18.0	9.0	18.0			
	80.3	235	1.9	34.86	8.0	18.0	9.0	18.0			
	92.0	205	2.2	30.44	9.0	18.0	9.0	18.0			
	106.5	177	2.6	26.30	9.0	18.0	9.0	18.0			
	120.9	156	2.5	23.16	9.0	17.0	9.0	17.0			
	36.7	548	0.8	24.55	6.0	17.0	9.0	17.0	PKD 1390 112M6C / 112M6D	62	206-207
	43.0	467	0.9	20.93	6.0	17.0	9.0	17.0			
	51.5	390	1.0	17.49	7.0	16.0	9.0	16.0			
	58.9	341	1.2	15.27	7.0	16.0	9.0	16.0			
	73.3	274	0.8	12.27	7.0	15.0	9.0	15.0			
	82.9	242	0.9	10.86	7.0	15.0	9.0	15.0			
	97.2	207	1.0	9.26	7.0	14.0	9.0	14.0			
	111.2	180	1.0	8.09	7.0	14.0	9.0	14.0			
	40.2	492	0.8	34.86	3.0	18.0	8.0	18.0	PKD 1390 100L4B / 100L4C	54	206-207
	44.5	444	0.9	31.48	4.0	18.0	8.0	18.0			
	50.5	391	1.0	27.72	5.0	18.0	9.0	18.0			
	57.0	346	1.2	24.55	6.0	17.0	9.0	17.0			
	66.9	295	1.4	20.93	6.0	17.0	9.0	17.0			
	80.0	247	1.5	17.49	7.0	16.0	9.0	16.0			
	91.7	215	1.8	15.27	7.0	16.0	9.0	16.0			
	114.1	173	1.3	12.27	7.0	15.0	9.0	15.0			
	128.9	153	1.3	10.86	7.0	15.0	9.0	15.0			
	151.2	131	1.5	9.26	7.0	14.0	9.0	14.0			
	173.1	114	1.6	8.09	7.0	14.0	9.0	14.0			
	50.7	373	0.8	55.26	3.0	18.0	9.0	20.0	PKD 1390 90L2D	44	206-207
	57.2	330	0.9	48.92	3.0	18.0	8.0	20.0			
	67.1	281	1.1	41.72	3.0	18.0	8.0	20.0			
	80.3	235	1.3	34.86	3.0	18.0	8.0	18.0			
	88.9	212	1.4	31.48	4.0	18.0	8.0	18.0			
	101.0	187	1.6	27.72	5.0	18.0	9.0	18.0			
	114.1	166	1.8	24.55	6.0	17.0	9.0	17.0			
	133.8	141	2.2	20.93	6.0	17.0	9.0	17.0			
	160.1	118	2.4	17.49	7.0	16.0	9.0	16.0			
	183.4	103	2.8	15.27	7.0	16.0	9.0	16.0			
	228.2	83	2.0	12.27	7.0	15.0	9.0	15.0			
	257.8	73	2.1	10.86	7.0	15.0	9.0	15.0			
	302.4	62	2.4	9.26	7.0	14.0	9.0	14.0			
	346.1	55	2.5	8.09	7.0	14.0	9.0	14.0			

P_1 [kW]	n_2 [Min^{-1}]	M_2 [Nm]	f_B	i_{ges}	F_R [N]	F_A [N]	$F_{R\,GR}$ [N]	$F_{A\,GR}$ [N]	Tip / Type / Typ IE2 / IE3	Kg	mm
2.20	24.6	829	0.8	36.59	6.1	12.0	-	-	PKD H 5290 112M6C / 112M6D	71	202-203
	28.1	725	0.9	32.02	6.7	12.0	-	-			
	31.6	645	1.0	28.46	7.1	12.0	-	-			
	35.5	575	1.2	25.37	7.3	12.0	-	-			
	40.5	503	1.3	22.20	7.6	12.0	-	-			
	45.6	447	1.4	19.73	7.7	12.0	-	-			
	50.4	404	1.5	17.84	7.8	12.0	-	-			
	57.7	354	1.7	15.61	7.9	12.0	-	-			
	64.8	314	1.8	13.88	7.8	12.0	-	-			
	72.6	281	1.9	12.40	7.6	12.0	-	-			
	82.9	246	2.2	10.85	6.2	12.0	-	-			
	93.4	218	2.4	9.64	6.2	12.0	-	-			
	105.1	194	2.7	8.56	6.2	12.0	-	-			
	118.6	172	2.9	7.59	6.2	12.0	-	-			
	38.3	527	1.3	36.59	6.1	12.0	-	-	PKD H 5290 100L4B / 100L4C	63	202-203
	43.7	461	1.4	32.02	6.7	12.0	-	-			
	49.2	410	1.5	28.46	7.1	12.0	-	-			
	55.2	366	1.8	25.37	7.3	12.0	-	-			
	63.1	320	1.9	22.20	7.6	12.0	-	-			
	71.0	284	2.1	19.73	7.7	12.0	-	-			
	78.5	257	2.3	17.84	7.8	12.0	-	-			
	89.7	225	2.6	15.61	7.9	12.0	-	-			
	100.9	200	2.7	13.88	7.8	12.0	-	-			
	112.9	179	2.9	12.40	7.6	12.0	-	-			
	53.4	366	1.2	52.42	6.1	12.0	-	-	PKD H 5290 90L2D	53	202-203
	61.1	320	1.2	45.86	6.1	12.0	-	-			
	68.7	285	1.2	40.77	6.1	12.0	-	-			
	76.5	256	2.0	36.59	6.1	12.0	-	-			
	87.4	224	2.1	32.02	6.7	12.0	-	-			
	98.4	199	2.3	28.46	7.1	12.0	-	-			
	44.2	461	0.8	20.35	5.0	12.0	-	-	PKD F 4290 112M6C / 112M6D	59	198-199
	49.8	410	0.8	18.09	5.3	12.0	-	-			
	56.0	364	1.1	16.08	5.5	12.0	-	-			
	64.0	319	1.1	14.07	5.7	12.0	-	-			
	71.3	286	1.2	12.63	5.8	12.0	-	-			
	82.0	249	1.4	10.98	5.9	11.8	-	-			
	92.2	221	1.5	9.76	5.9	11.3	-	-			
	103.8	196	1.7	8.67	6.0	10.9	-	-			
	116.7	175	1.9	7.71	6.0	10.4	-	-			
	132.4	154	2.0	6.80	6.1	10.0	-	-			
	152.0	134	2.2	5.92	0.9	12.0	-	-			
	41.0	492	0.8	34.15	1.8	12.0	-	-	PKD F 4290 100L4B / 100L4C	51	198-199
	46.9	430	0.8	29.88	3.0	12.0	-	-			
	52.7	383	0.9	26.56	3.9	12.0	-	-			
	60.2	335	1.1	23.26	4.6	12.0	-	-			
	68.8	293	1.2	20.35	5.0	12.0	-	-			
	77.4	261	1.2	18.09	5.3	12.0	-	-			
	87.1	232	1.6	16.08	5.5	12.0	-	-			
	99.5	203	1.7	14.07	5.7	12.0	-	-			
	110.8	182	1.9	12.63	5.8	12.0	-	-			
	127.5	158	2.1	10.98	5.9	11.8	-	-			
	143.4	141	2.3	9.76	5.9	11.3	-	-			
	161.5	125	2.6	8.67	6.0	10.9	-	-			
	181.6	111	2.8	7.71	6.0	10.4	-	-			
	205.9	98	3.0	6.80	6.1	10.0	-	-			
	58.3	335	0.8	48.01	1.8	12.0	-	-	PKD F 4290 90L2D	41	198-199
	66.7	294	0.9	42.01	1.8	12.0	-	-			
	75.0	261	1.0	37.34	1.8	12.0	-	-			
	82.0	239	1.2	34.15	1.8	12.0	-	-			
	93.7	209	1.2	29.88	3.0	12.0	-	-			
	105.4	186	1.4	26.56	3.9	12.0	-	-			
	174.1	112	2.5	16.08	5.5	12.0	-	-			
	199.0	98	2.6	14.07	5.7	12.0	-	-			
	221.7	88	2.9	12.63	5.8	12.0	-	-			

P_1 [kW]	n_2 [Min^{-1}]	M_2 [Nm]	f_B	i_{ges}	F_R [N]	F_A [N]	$F_{R\,GR}$ [N]	$F_{A\,GR}$ [N]	Tip / Type / Typ IE2 / IE3	Kg	mm
2.20	73.0	276	0.8	19.19	2.3	9.0	-	-	PKD C 1290 100L4B / 100L4C	42	194-195
	82.1	246	0.9	17.06	2.9	9.0	-	-			
	107.8	187	1.0	12.99	3.8	9.0	-	-			
	123.1	164	1.2	11.37	4.0	9.0	-	-			
	129.5	156	1.2	10.81	4.1	8.8	-	-			
	147.8	136	1.3	9.47	4.3	8.5	-	-			
	168.9	119	1.5	8.29	4.4	8.2	-	-			
	192.0	105	1.6	7.29	4.5	7.9	-	-			
	216.0	93	1.7	6.48	4.5	7.6	-	-			
	234.5	86	1.8	5.97	4.6	7.4	-	-			
	263.7	77	1.9	5.31	4.5	7.1	-	-			
	102.3	191	0.9	27.36	2.3	9.0	-	-	PKD C 1290 90L2D	32	194-195
	115.1	170	0.9	24.32	2.3	9.0	-	-			
	127.6	153	1.0	21.94	2.3	9.0	-	-			
	145.9	134	1.3	19.19	2.3	9.0	-	-			
	164.1	119	1.5	17.06	2.9	9.0	-	-			
	191.0	102	1.4	14.66	3.8	9.0	-	-			
	215.6	91	1.6	12.99	3.8	9.0	-	-			
	246.3	79	1.9	11.37	4.0	9.0	-	-			
	259.0	76	1.8	10.81	4.1	8.8	-	-			
	295.7	66	2.0	9.47	4.3	8.5	-	-			
	337.8	58	2.3	8.29	4.4	8.2	-	-			
	384.1	51	2.5	7.29	4.5	7.9	-	-			
	432.1	45	2.7	6.48	4.5	7.6	-	-			
	469.0	42	2.8	5.97	4.6	7.4	-	-			
	527.3	37	3.0	5.31	4.5	7.1	-	-			
	179.3	109	0.8	15.62	2.7	5.6	-	-	PKD B 0290 90L2D	25	190-191
	207.7	94	1.0	13.48	2.7	5.6	-	-			
	237.5	82	1.1	11.79	2.7	5.6	-	-			
	270.5	72	1.2	10.35	2.7	5.6	-	-			
	309.1	63	1.3	9.06	2.7	5.6	-	-			
	350.0	56	1.4	8.00	2.7	5.6	-	-			
	397.2	49	1.5	7.05	2.7	5.6	-	-			
	463.6	42	1.6	6.04	2.7	5.6	-	-			
	524.3	37	1.7	5.34	2.7	5.6	-	-			
	587.0	33	1.8	4.77	2.7	5.6	-	-			
	681.3	29	2.0	4.11	2.7	5.6	-	-			
3.00	0.4	67342	0.8	2316.27	-	-	-	-	PKD G 9390/63 132S6A	1828	282
	0.4	59662	0.9	2052.10	-	-	-	-			
	0.5	51583	1.0	1774.21	-	-	-	-			
	0.4	66496	0.8	3692.48	-	-	-	-	PKD G 9390/63 100L4C / 100L4D	1798	282
	0.4	57810	0.9	3210.12	-	-	-	-			
	0.5	48246	1.0	2679.06	-	-	-	-			
	0.6	41713	1.2	2316.27	-	-	-	-			
	0.7	36955	1.4	2052.10	-	-	-	-			
	0.8	31951	1.6	1774.21	-	-	-	-			
	0.5	46071	0.8	5575.65	-	-	-	-	PKD G 9390/63 100L2C / 100L2D	1798	272
	0.6	36699	1.0	4441.42	-	-	-	-			
	0.8	30510	1.2	3692.48	-	-	-	-			
	0.9	26525	1.4	3210.12	-	-	-	-			
	1.0	22137	1.7	2679.06	-	-	-	-			
	1.2	19139	2.0	2316.27	-	-	-	-			
	1.4	16956	2.2	2052.10	-	-	-	-			
	1.6	14660	2.6	1774.21	-	-	-	-			
	0.6	47925	1.1	1623.67	-	-	-	-	PKD G 9390/62 132S6A	1830	282
	0.7	39961	1.3	1353.86	-	-	-	-			
	0.8	34393	1.5	1165.22	-	-	-	-			
	0.9	28906	1.8	979.31	-	-	-	-			
	1.1	24102	2.2	816.57	-	-	-	-			
	1.3	20744	2.5	702.80	-	-	-	-			
	1.5	17935	2.9	607.93	-	-	-	-			

P_1 [kW]	n_2 [Min^{-1}]	M_2 [Nm]	f_B	i_{ges}	F_R [N]	F_A [N]	$F_{R\,GR}$ [N]	$F_{A\,GR}$ [N]	Tip / Type / Typ IE2 / IE3	Kg	mm
3.00	0.9	29905	1.7	1623.67	-	-	-	-	PKD G 9390/62 100L4C / 100L4D	1800	282
	1.0	24935	2.0	1353.86	-	-	-	-			
	1.2	21461	2.3	1165.22	-	-	-	-			
	1.4	18037	2.8	979.31	-	-	-	-			
	1.7	13903	2.7	1623.67	-	-	-	-	PKD G 9390/62 100L2C / 100L2D	1800	282
	0.6	42049	0.8	1424.59	129.0	70.0	160.0	70.0	PKD 9390/52 132S6A	1530	280
	0.8	33038	1.0	1119.32	142.0	70.0	160.0	70.0			
	1.1	24971	1.3	846.00	149.0	70.0	160.0	70.0			
	1.3	20855	1.6	706.54	152.0	70.0	160.0	70.0			
	1.5	17998	1.9	609.75	154.0	70.0	160.0	70.0			
	2.0	13113	2.6	444.25	144.0	70.0	160.0	70.0			
	2.3	11400	2.9	386.23	144.0	70.0	160.0	70.0			
	0.7	38941	0.8	2114.30	-	-	-	-	PKD 9390/52 100L4C / 100L4D	1500	280
	0.8	33062	1.0	1795.13	-	-	-	-			
	1.0	26238	1.2	1424.59	129.0	70.0	160.0	70.0			
	1.3	20615	1.6	1119.32	142.0	70.0	160.0	70.0			
	1.7	15582	2.1	846.00	149.0	70.0	160.0	70.0			
	2.0	13013	2.5	706.54	152.0	70.0	160.0	70.0			
	2.3	11230	2.8	609.75	154.0	70.0	160.0	70.0			
	1.0	24947	0.8	2913.46	129.0	70.0	-	-	PKD 9390/52 100L2C / 100L2D	1500	280
	1.3	18104	1.3	2114.30	129.0	70.0	-	-			
	1.6	15371	1.6	1795.13	129.0	70.0	-	-			
	2.0	12198	2.0	1424.59	129.0	70.0	160.0	70.0			
	2.5	9584	2.5	1119.32	142.0	70.0	160.0	70.0			
	1.0	26854	0.8	909.80	102.0	65.0	120.0	65.0	PKD G 8390/52 132S6A	960	280
	1.3	21099	1.0	714.84	110.0	65.0	120.0	65.0			
	1.4	18408	1.1	623.65	113.0	65.0	120.0	65.0			
	2.1	12838	1.6	434.96	118.0	65.0	120.0	65.0			
	2.4	11201	1.9	379.47	119.0	65.0	120.0	65.0			
	3.3	8024	2.6	271.85	92.0	65.0	-	-			
	3.8	6976	3.0	236.35	92.0	65.0	-	-			
	1.2	22170	0.8	1203.73	83.0	65.0	120.0	65.0	PKD G 8390/52 100L4C / 100L4D	930	280
	1.5	16757	1.1	909.80	102.0	65.0	120.0	65.0			
	2.0	13166	1.4	714.84	110.0	65.0	120.0	65.0			
	2.2	11486	1.6	623.65	113.0	65.0	120.0	65.0			
	3.2	8011	2.2	434.96	118.0	65.0	120.0	65.0			
	3.7	6989	2.6	379.47	119.0	65.0	120.0	65.0			
	1.3	18102	0.8	2114.13	83.0	65.0	-	-	PKD G 8390/52 100L2C / 100L2D	930	280
	1.6	15297	1.0	1786.51	83.0	65.0	-	-			
	1.9	12529	1.2	1463.24	83.0	65.0	120.0	65.0			
	2.3	10307	1.5	1203.73	83.0	65.0	120.0	65.0			
	3.1	7790	2.0	909.80	102.0	65.0	120.0	65.0			
	3.9	6121	2.5	714.84	110.0	65.0	120.0	65.0			
	4.5	5340	2.8	623.65	113.0	65.0	120.0	65.0			
	3.7	7274	1.9	246.45	95.0	60.0	95.0	60.0	PKD 8390/52 132S6A	710	280
	4.9	5381	2.5	182.32	95.0	60.0	95.0	60.0			
	5.7	4539	2.9	246.45	95.0	60.0	95.0	60.0	PKD 8390/52 100L4C / 100L4D	680	280
	1.5	17796	0.8	602.92	85.0	60.0	95.0	60.0	PKD 8390/42 132S6A	685	280
	2.0	13116	1.0	444.35	91.0	60.0	95.0	60.0			
	2.4	11216	1.2	379.99	92.0	60.0	95.0	60.0			
	3.1	8442	1.6	286.02	94.0	60.0	95.0	60.0			
	1.7	15570	0.8	845.40	73.0	60.0	95.0	60.0	PKD 8390/42 100L4C / 100L4D	655	280
	2.0	12985	1.0	705.03	80.0	60.0	95.0	60.0			
	2.3	11104	1.2	602.92	85.0	60.0	95.0	60.0			
	3.2	8184	1.6	444.35	91.0	60.0	95.0	60.0			
	3.7	6999	1.9	379.99	92.0	60.0	95.0	60.0			
	4.9	5268	2.5	286.02	94.0	60.0	95.0	60.0			

P_1 [kW]	n_2 [Min^{-1}]	M_2 [Nm]	f_B	i_{ges}	F_R [N]	F_A [N]	$F_{R\,GR}$ [N]	$F_{A\,GR}$ [N]	Tip / Type / Typ IE2 / IE3	Kg	mm
3.00	1.9 2.8 3.3 4.0 4.6 6.3 7.4	12565 8716 7239 6037 5163 3805 3254	0.8 1.1 1.4 1.6 1.9 2.6 3.0	1467.49 1017.96 845.40 705.03 602.92 444.35 379.99	73.0 73.0 73.0 80.0 85.0 91.0 92.0	60.0 60.0 60.0 60.0 60.0 60.0 60.0	95.0 95.0 95.0 95.0 95.0 95.0 95.0	60.0 60.0 60.0 60.0 60.0 60.0 60.0	PKD 8390/42 100L2C / 100L2D	655	280
	3.9	7018	3.0	230.68	119.0	65.0	-	-	PKD G 8390 132S6A	884	266-267
	3.0 3.7 6.0	9026 7431 4528	1.5 1.8 3.0	296.68 244.25 148.84	91.0 91.0 91.0	60.0 60.0 60.0	- - -	- - -	PKD 8390 132S6A	634	262-263
	3.3 4.6 5.7 6.7	7953 5794 4636 3964	1.1 1.3 1.4 1.6	269.43 196.30 157.05 134.31	60.0 63.0 64.0 65.0	50.0 50.0 50.0 50.0	66.0 66.0 66.0 66.0	50.0 50.0 48.0 46.0	PKD 7390/42 132S6A	425	278
	5.2 7.1 8.9 10.4	4962 3615 2893 2474	1.7 2.0 2.2 2.5	269.43 196.30 157.05 134.31	60.0 63.0 64.0 65.0	50.0 50.0 50.0 50.0	66.0 66.0 66.0 66.0	50.0 50.0 48.0 46.0	PKD 7390/42 100L4C / 100L4D	395	278
	10.4	2307	2.8	269.43	60.0	50.0	-	-	PKD 7390/42 100L2C / 100L2D	395	278
	2.3 2.9	11356 9153	0.8 1.0	384.74 310.09	54.0 59.0	50.0 50.0	66.0 66.0	50.0 50.0	PKD 7390/32 132S6A	408	278
	2.3 3.0 3.6 4.5	10979 8673 7086 5711	0.8 1.0 1.2 1.5	596.10 470.91 384.74 310.09	51.0 47.0 54.0 59.0	50.0 50.0 50.0 50.0	66.0 66.0 66.0 66.0	50.0 50.0 50.0 50.0	PKD 7390/32 100L4C / 100L4D	378	278
	2.9 3.7 4.7 5.9 7.3 9.0	8326 6552 5104 4032 3294 2655	0.8 1.0 1.3 1.6 2.0 2.4	972.42 765.14 596.10 470.91 384.74 310.09	51.0 51.0 51.0 47.0 54.0 59.0	50.0 50.0 50.0 50.0 50.0 50.0	66.0 66.0 66.0 66.0 66.0 66.0	50.0 50.0 50.0 50.0 50.0 50.0	PKD 7390/32 100L2C / 100L2D	378	278
	3.7 4.3 4.8 5.7 6.6 8.2	7470 6297 5682 4790 4157 3349	1.2 1.4 1.6 1.9 1.7 2.7	245.55 206.98 186.78 157.44 136.65 110.10	61.0 63.0 65.0 65.0 65.0 64.0	50.0 50.0 50.0 50.0 50.0 50.0	66.0 66.0 66.0 66.0 66.0 66.0	50.0 50.0 47.0 46.0 49.0 47.0	PKD 7390 132S6A	374	258-259
	5.7 6.8 10.2	4724 3982 2629	1.8 2.1 2.5	245.55 206.98 136.65	61.0 63.0 65.0	50.0 50.0 50.0	66.0 66.0 66.0	50.0 50.0 49.0	PKD 7390 100L4C / 100L4D	344	258-259
	11.4	2258	2.9	245.55	61.0	50.0	66.0	50.0	PKD 7390 100L2C / 100L2D	344	258-259
	3.5 4.8 6.0 7.0	7626 5556 4445 3801	1.1 1.4 1.5 1.7	258.36 188.23 150.60 128.79	61.0 63.0 64.0 58.0	50.0 50.0 50.0 50.0	66.0 66.0 66.0 66.0	50.0 50.0 50.0 50.0	PKD 6390/42 132S6A	425	278
	5.4 7.4 9.3 10.9	4758 3467 2774 2372	1.7 2.1 2.2 2.5	258.36 188.23 150.60 128.79	61.0 63.0 64.0 58.0	50.0 50.0 50.0 50.0	66.0 66.0 66.0 -	50.0 50.0 50.0 -	PKD 6390/42 100L4C / 100L4D	395	278
	10.8	2212	2.8	258.36	61.0	50.0	66.0	50.0	PKD 6390/42 100L2C / 100L2D	395	278

P_1 [kW]	n_2 [Min^{-1}]	M_2 [Nm]	f_B	i_{ges}	F_R [N]	F_A [N]	$F_{R\,GR}$ [N]	$F_{A\,GR}$ [N]	Tip / Type / Typ IE2 / IE3	Kg	mm
3.00	2.4 3.0	10889 8777	0.8 1.0	368.93 297.35	55.0 59.0	50.0 50.0	66.0 66.0	50.0 50.0	**PKD 6390/32 132S6A**	408	278
	2.4 3.1 3.8 4.7	10528 8317 6795 5477	0.8 1.0 1.2 1.5	571.60 451.55 368.93 297.35	52.0 49.0 55.0 59.0	50.0 50.0 50.0 50.0	66.0 66.0 66.0 66.0	50.0 50.0 50.0 50.0	**PKD 6390/32 100L4C / 100L4D**	378	278
	3.0 3.8 4.9 6.2 7.6 9.4	7984 6282 4894 3866 3159 2546	0.8 1.0 1.3 1.6 2.0 2.4	932.46 733.69 571.60 451.55 368.93 297.35	52.0 52.0 52.0 49.0 55.0 59.0	50.0 50.0 50.0 50.0 50.0 50.0	66.0 66.0 66.0 66.0 66.0 66.0	50.0 50.0 50.0 50.0 50.0 50.0	**PKD 6390/32 100L2C / 100L2D**	378	278
	3.8 4.5 5.0 6.0 7.0 8.5	7163 6031 5449 4587 3935 3212	1.2 1.4 1.6 1.9 1.8 2.7	235.45 198.23 179.11 150.79 129.36 105.58	61.0 63.0 64.0 64.0 64.0 61.0	50.0 50.0 50.0 50.0 50.0 50.0	66.0 66.0 66.0 66.0 66.0 66.0	50.0 50.0 50.0 50.0 50.0 50.0	**PKD 6390 132S6A**	374	254-255
	5.9 7.1 10.8	4529 3813 2488	1.8 2.2 2.7	235.45 198.23 129.36	61.0 63.0 64.0	50.0 50.0 50.0	66.0 66.0 66.0	50.0 50.0 50.0	**PKD 6390 100L4C / 100L4D**	344	254-255
	11.9	2165	2.9	235.45	61.0	50.0	66.0	50.0	**PKD 6390 100L2C / 100L2D**	344	254-255
	5.3 6.1 8.5	4982 4311 3107	1.0 1.1 1.5	264.64 228.99 165.02	36.0 18.0 38.0	45.0 45.0 45.0	38.0 38.0 38.0	45.0 45.0 44.0	**PKD 5490 100L4C / 100L4D**	222	250-251
	8.0 10.6 12.2 17.0	3095 2348 2032 1464	1.2 1.6 1.8 2.5	348.85 264.64 228.99 165.02	36.0 36.0 18.0 38.0	45.0 45.0 45.0 45.0	38.0 38.0 38.0 38.0	45.0 45.0 45.0 45.0	**PKD 5490 100L2C / 100L2D**	222	250-251
	4.5 5.3 7.5 8.8 10.2 12.5 14.4 16.5	6035 5154 3651 3118 2681 2196 1900 1660	0.8 1.0 1.4 1.6 1.9 2.3 2.7 3.0	198.37 169.43 120.01 102.50 88.12 72.18 62.45 54.55	31.0 34.0 36.0 35.0 37.0 31.0 31.0 31.0	45.0 45.0 45.0 45.0 45.0 45.0 45.0 45.0	38.0 38.0 38.0 38.0 38.0 38.0 38.0 38.0	42.0 41.0 38.0 37.0 36.0 34.0 32.0 31.0	**PKD 5390 132S6A**	234	246-247
	4.8 5.7 7.1 8.3 9.6 11.7 13.7 15.9	5571 4758 3816 3259 2795 2309 1972 1695	0.9 1.0 1.3 1.5 1.7 2.1 2.4 2.8	289.62 247.36 198.37 169.43 145.30 120.01 102.50 88.12	20.0 26.0 31.0 34.0 35.0 36.0 35.0 37.0	45.0 45.0 45.0 45.0 45.0 45.0 45.0 45.0	38.0 38.0 38.0 38.0 38.0 38.0 38.0 38.0	43.0 43.0 42.0 41.0 40.0 38.0 37.0 36.0	**PKD 5390 100L4C / 100L4D**	204	246-247
	9.7 11.3 14.1 16.5 19.3	2663 2274 1824 1558 1336	1.4 1.6 2.0 2.3 2.0	289.62 247.36 198.37 169.43 145.30	20.0 26.0 31.0 34.0 35.0	45.0 45.0 45.0 45.0 45.0	38.0 38.0 38.0 38.0 38.0	43.0 43.0 42.0 41.0 40.0	**PKD 5390 100L2C / 100L2D**	204	246-247
	8.1	3240	0.9	172.07	17.0	40.0	28.0	20.0	**PKD 4490 100L4C / 100L4D**	144	242-243
	10.0 13.7 16.3	2475 1811 1527	0.9 1.2 1.4	278.98 204.13 172.07	17.0 17.0 17.0	40.0 40.0 40.0	- - 28.0	- - 20.0	**PKD 4490 100L2C / 100L2D**	144	242-243

P_1 [kW]	n_2 [Min^{-1}]	M_2 [Nm]	f_B	i_{ges}	F_R [N]	F_A [N]	$F_{R\,GR}$ [N]	$F_{A\,GR}$ [N]	Tip / Type / Typ IE2 / IE3	Kg	mm
3.00	9.4	2907	1.0	95.57	25.0	40.0	28.0	21.0	PKD 4390 132S6A	159	238-239
	10.4	2632	1.1	86.50	26.0	40.0	28.0	21.0			
	11.8	2315	1.3	76.08	27.0	40.0	28.0	20.0			
	13.1	2085	1.4	68.52	27.0	40.0	28.0	20.0			
	14.2	1923	1.5	63.21	27.0	40.0	28.0	20.0			
	16.2	1694	1.7	55.67	27.0	40.0	28.0	20.0			
	18.9	1448	2.0	47.61	17.0	40.0	28.0	19.0			
	22.2	1234	2.4	40.56	17.0	40.0	28.0	19.0			
	26.2	1046	2.8	34.38	17.0	40.0	28.0	18.0			
	8.8	3076	0.9	159.93	19.0	40.0	28.0	20.0	PKD 4390 100L4C / 100L4D	129	238-239
	10.5	2556	1.1	132.86	23.0	40.0	28.0	20.0			
	11.9	2266	1.1	117.81	24.0	40.0	28.0	21.0			
	14.6	1838	1.5	95.57	25.0	40.0	28.0	21.0			
	16.2	1664	1.7	86.50	26.0	40.0	28.0	21.0			
	18.4	1464	1.9	76.08	27.0	40.0	28.0	20.0			
	20.4	1318	2.1	68.52	27.0	40.0	28.0	20.0			
	22.1	1216	2.3	63.21	27.0	40.0	28.0	20.0			
	25.1	1071	2.6	55.67	27.0	40.0	28.0	20.0			
	11.9	2159	1.0	234.83	19.0	40.0	28.0	23.0	PKD 4390 100L2C / 100L2D	129	238-239
	14.4	1794	1.2	195.09	19.0	40.0	28.0	23.0			
	17.5	1471	1.4	159.93	19.0	40.0	28.0	20.0			
	21.1	1222	1.7	132.86	23.0	40.0	28.0	20.0			
	23.8	1083	1.7	117.81	24.0	40.0	28.0	21.0			
	29.3	879	2.4	95.57	25.0	40.0	28.0	21.0			
	32.4	795	2.7	86.50	26.0	40.0	28.0	21.0			
	36.8	700	3.0	76.08	27.0	40.0	28.0	20.0			
	15.2	1799	0.9	59.15	9.0	15.0	15.0	10.0	PKD 3390 132S6A	112	230-231
	18.0	1519	1.1	49.94	9.0	15.0	15.0	10.0			
	18.9	1450	1.1	47.67	9.0	15.0	15.0	11.0			
	22.3	1228	1.3	40.37	9.0	15.0	15.0	10.0			
	25.2	1085	1.5	35.65	9.0	15.0	15.0	10.0			
	30.3	903	1.7	29.67	9.0	14.0	15.0	10.0			
	35.9	762	2.1	25.06	7.0	15.0	15.0	10.0			
	37.6	728	2.2	23.92	7.0	15.0	15.0	10.0			
	44.4	616	2.6	20.25	7.0	15.0	15.0	10.0			
	52.6	520	2.9	17.10	7.0	15.0	15.0	9.0			
	71.0	386	2.7	12.68	7.0	15.0	15.0	9.0			
	83.8	327	2.9	10.74	7.0	15.0	15.0	8.0			
	14.9	1802	0.9	93.67	1.0	14.0	13.0	10.0	PKD 3390 100L4C / 100L4D	82	230-231
	16.6	1619	1.0	84.16	5.0	15.0	15.0	10.0			
	18.4	1460	1.1	75.92	8.0	15.0	15.0	10.0			
	21.8	1233	1.3	64.11	9.0	15.0	15.0	10.0			
	23.7	1138	1.4	59.15	9.0	15.0	15.0	10.0			
	28.0	961	1.6	49.94	9.0	15.0	15.0	10.0			
	29.4	917	1.7	47.67	9.0	15.0	15.0	11.0			
	34.7	777	2.0	40.37	9.0	15.0	15.0	10.0			
	36.8	733	2.1	38.09	9.0	15.0	15.0	10.0			
	39.3	686	2.3	35.65	9.0	15.0	15.0	10.0			
	47.2	571	2.6	29.67	9.0	14.0	15.0	10.0			
	17.6	1461	0.8	158.92	1.0	14.0	15.0	14.0	PKD 3390 100L2C / 100L2D	82	230-231
	25.2	1020	1.2	110.94	1.0	14.0	15.0	12.0			
	29.9	861	1.4	93.67	1.0	14.0	13.0	10.0			
	33.3	774	1.5	84.16	5.0	15.0	15.0	10.0			
	36.9	698	1.7	75.92	8.0	15.0	15.0	10.0			
	43.7	589	2.0	64.11	9.0	15.0	15.0	10.0			
	47.3	544	2.2	59.15	9.0	15.0	15.0	10.0			
	56.1	459	2.6	49.94	9.0	15.0	15.0	10.0			
	58.7	438	2.7	47.67	9.0	15.0	15.0	11.0			

P_1 [kW]	n_2 [Min^{-1}]	M_2 [Nm]	f_B	i_{ges}	F_R [N]	F_A [N]	$F_{R\,GR}$ [N]	$F_{A\,GR}$ [N]	Tip / Type / Typ IE2 / IE3	Kg	mm
3.00	24.0	1120	0.8	58.24	2.0	12.0	9.0	11.0	PKD 2390 100L4C / 100L4D	62	222-223
	26.9	1002	0.9	52.11	0.3	12.0	6.0	10.0			
	28.6	942	0.9	48.99	0.3	12.0	7.0	10.0			
	31.3	862	1.0	44.80	0.4	12.0	9.0	10.0			
	35.3	764	1.1	39.70	4.0	12.0	10.0	10.0			
	42.1	640	1.3	33.28	6.0	12.0	11.0	10.0			
	44.5	605	1.4	31.43	6.0	12.0	11.0	10.0			
	47.9	562	1.5	29.22	7.0	12.0	11.0	10.0			
	53.6	503	1.7	26.14	8.0	12.0	12.0	10.0			
	57.0	473	1.8	24.58	8.0	12.0	12.0	10.0			
	62.3	432	1.8	22.48	8.0	12.0	12.0	10.0			
	70.3	383	2.0	19.92	8.0	12.0	12.0	10.0			
	79.9	337	2.1	17.52	7.0	12.0	12.0	9.0			
	85.9	313	2.0	16.29	7.0	12.0	12.0	9.0			
	96.0	280	2.1	14.58	7.0	12.0	12.0	9.0			
	111.7	241	2.2	12.53	7.0	11.0	12.0	9.0			
	126.0	214	2.4	11.11	7.0	11.0	12.0	9.0			
	159.3	169	2.8	8.79	6.0	10.0	12.0	8.0			
	35.5	725	0.9	78.85	2.0	12.0	10.0	13.0	PKD 2390 100L2C / 100L2D	62	222-223
	42.1	611	1.1	66.47	2.0	12.0	8.0	11.0			
	48.1	536	1.2	58.24	2.0	12.0	9.0	11.0			
	53.7	479	1.4	52.11	3.0	12.0	6.0	10.0			
	57.2	450	1.5	48.99	3.0	12.0	7.0	10.0			
	62.5	412	1.6	44.80	4.0	12.0	9.0	10.0			
	70.5	365	1.8	39.70	4.0	12.0	10.0	10.0			
	84.1	306	2.1	33.28	6.0	12.0	11.0	10.0			
	89.1	289	2.2	31.43	6.0	12.0	11.0	10.0			
	95.8	269	2.4	29.22	7.0	12.0	11.0	10.0			
	107.1	240	2.7	26.14	8.0	12.0	12.0	10.0			
	113.9	226	2.9	24.58	8.0	12.0	12.0	10.0			
	124.6	207	2.9	22.48	8.0	12.0	12.0	10.0			
	34.3	786	0.8	40.87	7.0	18.0	9.0	18.0	PKD G 1390 100L4C / 100L4D	55	214-215
	40.2	671	0.9	34.86	6.0	16.0	9.0	16.0			
	46.0	586	1.0	30.44	7.0	16.0	9.0	16.0			
	53.2	506	1.2	26.30	8.0	16.0	9.0	16.0			
	60.4	446	1.2	23.16	8.0	16.0	9.0	16.0			
	68.3	395	1.5	20.51	9.0	16.0	9.0	16.0			
	80.0	336	1.6	17.49	9.0	15.0	9.0	15.0			
	91.7	294	1.8	15.27	9.0	15.0	9.0	15.0			
	112.1	240	2.2	12.49	9.0	15.0	9.0	15.0			
	43.7	589	0.8	64.06	7.0	18.0	9.0	20.0	PKD G 1390 100L2C / 100L2D	55	214-215
	53.4	482	1.0	52.42	7.0	18.0	9.0	19.0			
	60.7	424	1.1	46.16	7.0	18.0	9.0	18.0			
	68.5	376	1.2	40.87	7.0	18.0	8.0	18.0			
	80.3	321	1.4	34.86	6.0	16.0	9.0	18.0			
	92.0	280	1.6	30.44	7.0	16.0	9.0	18.0			
	106.5	242	1.9	26.30	8.0	16.0	9.0	18.0			
	120.9	213	1.9	23.16	8.0	16.0	9.0	17.0			
	136.5	189	2.3	20.51	9.0	16.0	9.0	17.0			
	160.1	161	2.6	17.49	9.0	15.0	9.0	16.0			
	183.4	140	2.8	15.27	9.0	15.0	9.0	16.0			
	50.5	533	0.8	27.72	5.0	18.0	9.0	18.0	PKD 1390 100L4C / 100L4D	54	206-207
	57.0	472	0.8	24.55	3.0	16.0	8.0	16.0			
	66.9	403	1.0	20.93	5.0	16.0	8.0	16.0			
	80.0	336	1.1	17.49	6.0	15.0	9.0	15.0			
	91.7	294	1.3	15.27	6.0	15.0	9.0	15.0			
	114.1	236	0.9	12.27	7.0	14.0	9.0	14.0			
	128.9	209	1.0	10.86	7.0	14.0	9.0	14.0			
	151.2	178	1.1	9.26	7.0	14.0	9.0	14.0			
	173.1	156	1.2	8.09	7.0	13.0	9.0	13.0			

P_1 [kW]	n_2 [Min^{-1}]	M_2 [Nm]	f_B	i_{ges}	F_R [N]	F_A [N]	$F_{R\,GR}$ [N]	$F_{A\,GR}$ [N]	Tip / Type / Typ IE2 / IE3	Kg	mm
3.00	67.1	384	0.8	41.72	5.0	18.0	8.0	20.0	PKD 1390 100L2C / 100L2D	54	206-207
	80.3	321	0.9	34.86	5.0	18.0	8.0	18.0			
	88.9	289	1.1	31.48	5.0	18.0	8.0	18.0			
	101.0	255	1.2	27.72	5.0	18.0	9.0	18.0			
	114.1	226	1.3	24.55	3.0	16.0	8.0	16.0			
	133.8	192	1.6	20.93	5.0	16.0	8.0	16.0			
	160.1	161	1.8	17.49	6.0	15.0	9.0	15.0			
	183.4	140	2.1	15.27	6.0	15.0	9.0	15.0			
	228.2	113	1.5	12.27	7.0	14.0	9.0	14.0			
	257.8	100	1.5	10.86	7.0	14.0	9.0	14.0			
	302.4	85	1.7	9.26	7.0	14.0	9.0	14.0			
	346.1	74	1.8	8.09	7.0	13.0	9.0	13.0			
	35.5	784	0.9	25.37	6.3	12.0	-	-	PKD H 5290 132S6A	93	202-203
	40.5	686	0.9	22.20	6.9	12.0	-	-			
	45.6	609	1.0	19.73	7.2	12.0	-	-			
	50.4	551	1.1	17.84	7.4	12.0	-	-			
	57.7	482	1.3	15.61	7.5	12.0	-	-			
	64.8	429	1.3	13.88	7.4	12.0	-	-			
	72.6	383	1.4	12.40	7.2	12.0	-	-			
	82.9	335	1.6	10.85	7.0	11.6	-	-			
	93.4	298	1.7	9.64	6.8	11.2	-	-			
	105.1	264	2.0	8.56	6.6	10.7	-	-			
	118.6	234	2.1	7.59	6.1	12.0	-	-			
	140.2	198	2.4	6.42	6.1	12.0	-	-			
	147.3	189	2.3	6.11	6.1	12.0	-	-			
	165.7	168	2.7	5.43	6.1	12.0	-	-			
	187.5	148	2.9	4.80	6.1	12.0	-	-			
	38.3	719	0.9	36.59	3.2	12.0	-	-	PKD H 5290 100L4C / 100L4D	63	202-203
	43.7	629	1.0	32.02	4.8	12.0	-	-			
	49.2	559	1.1	28.46	5.8	12.0	-	-			
	55.2	498	1.3	25.37	6.3	12.0	-	-			
	63.1	436	1.4	22.20	6.9	12.0	-	-			
	71.0	388	1.5	19.73	7.2	12.0	-	-			
	78.5	350	1.7	17.84	7.4	12.0	-	-			
	89.7	307	1.9	15.61	7.5	12.0	-	-			
	100.9	273	2.0	13.88	7.4	12.0	-	-			
	112.9	244	2.1	12.40	7.2	12.0	-	-			
	129.0	213	2.4	10.85	7.0	11.6	-	-			
	145.2	189	2.6	9.64	6.8	11.2	-	-			
	163.6	168	2.9	8.56	6.6	10.7	-	-			
	76.5	349	1.4	36.59	3.2	12.0	-	-	PKD H 5290 100L2C / 100L2D	63	202-203
	87.4	305	1.6	32.02	4.8	12.0	-	-			
	98.4	271	1.7	28.46	5.8	12.0	-	-			
	110.4	242	2.0	25.37	6.3	12.0	-	-			
	126.1	212	2.2	22.20	6.9	12.0	-	-			
	141.9	188	2.4	19.73	7.2	12.0	-	-			
	157.0	170	2.6	17.84	7.4	12.0	-	-			
	179.4	149	3.0	15.61	7.5	12.0	-	-			
	56.0	497	0.8	16.08	4.7	12.0	-	-	PKD F 4290 132S6A	81	198-199
	64.0	435	0.8	14.07	5.1	12.0	-	-			
	71.3	390	0.9	12.63	5.3	11.7	-	-			
	82.0	339	1.0	10.98	5.5	11.2	-	-			
	92.2	301	1.1	9.76	5.7	10.8	-	-			
	103.8	268	1.3	8.67	5.8	10.4	-	-			
	116.7	238	1.4	7.71	5.9	10.0	-	-			
	132.4	210	1.5	6.80	6.0	9.6	-	-			
	152.0	183	1.6	5.92	6.0	9.2	-	-			
	165.1	168	1.7	5.45	1.8	12.0	-	-			
	185.6	150	1.9	4.85	1.8	12.0	-	-			

P_1 [kW]	n_2 [Min^{-1}]	M_2 [Nm]	f_B	i_{ges}	F_R [N]	F_A [N]	$F_{R\,GR}$ [N]	$F_{A\,GR}$ [N]	Tip / Type / Typ IE2 / IE3	Kg	mm
3.00	60.2	457	0.8	23.26	2.1	12.0	-	-	PKD F 4290 100L4C / 100L4D	51	198-199
	68.8	400	0.9	20.35	3.5	12.0	-	-			
	77.4	355	0.9	18.09	4.2	12.0	-	-			
	87.1	316	1.2	16.08	4.7	12.0	-	-			
	99.5	276	1.2	14.07	5.1	12.0	-	-			
	110.8	248	1.4	12.63	5.3	11.7	-	-			
	127.5	216	1.6	10.98	5.5	11.2	-	-			
	143.4	192	1.7	9.76	5.7	10.8	-	-			
	161.5	170	1.9	8.67	5.8	10.4	-	-			
	181.6	151	2.0	7.71	5.9	10.0	-	-			
	205.9	134	2.2	6.80	6.0	9.6	-	-			
	236.5	116	2.4	5.92	6.0	9.2	-	-			
	82.0	325	0.9	34.15	2.1	12.0	-	-	PKD F 4290 100L2C / 100L2D	51	198-199
	93.7	285	0.9	29.88	2.1	12.0	-	-			
	105.4	253	1.0	26.56	2.1	12.0	-	-			
	120.4	222	1.3	23.26	2.1	12.0	-	-			
	137.6	194	1.3	20.35	3.5	12.0	-	-			
	154.8	172	1.4	18.09	4.2	12.0	-	-			
	174.1	153	1.8	16.08	4.7	12.0	-	-			
	199.0	134	1.9	14.07	5.1	12.0	-	-			
	221.7	120	2.1	12.63	5.3	11.7	-	-			
	255.0	105	2.4	10.98	5.5	11.2	-	-			
	286.9	93	2.6	9.76	5.7	10.8	-	-			
	323.0	83	2.9	8.67	5.8	10.4	-	-			
	107.8	255	0.8	12.99	3.8	9.0	-	-	PKD C 1290 100L4C / 100L4D	42	194-195
	123.1	223	0.9	11.37	3.3	8.2	-	-			
	129.5	212	0.8	10.81	3.4	8.1	-	-			
	147.8	186	0.9	9.47	3.8	7.9	-	-			
	168.9	163	1.1	8.29	4.0	7.7	-	-			
	192.0	143	1.2	7.29	4.2	7.4	-	-			
	216.0	127	1.3	6.48	4.3	7.2	-	-			
	234.5	117	1.3	5.97	4.4	7.0	-	-			
	263.7	104	1.4	5.31	4.3	6.8	-	-			
	145.9	183	1.0	19.19	3.8	9.0	-	-	PKD C 1290 100L2C / 100L2D	42	194-195
	164.1	163	1.1	17.06	3.8	9.0	-	-			
	215.6	124	1.2	12.99	3.8	9.0	-	-			
	246.3	108	1.4	11.37	3.3	8.2	-	-			
	259.0	103	1.3	10.81	3.4	8.1	-	-			
	295.7	90	1.5	9.47	3.8	7.9	-	-			
	337.8	79	1.7	8.29	4.0	7.7	-	-			
	384.1	69	1.8	7.29	4.2	7.4	-	-			
	432.1	62	2.0	6.48	4.3	7.2	-	-			
	469.0	57	2.1	5.97	4.4	7.0	-	-			
	527.3	51	2.2	5.31	4.3	6.8	-	-			
4.00	0.5	68777	0.8	1774.21	-	-	-	-	PKD G 9390/63 132M6A	1828	282
	0.5	64328	0.8	2679.06	-	-	-	-	PKD G 9390/63 112M4C / 112M4D	1806	282
	0.6	55617	0.9	2316.27	-	-	-	-			
	0.7	49274	1.0	2052.10	-	-	-	-			
	0.8	42601	1.2	1774.21	-	-	-	-			
	0.6	48932	0.8	4441.42	-	-	-	-	PKD G 9390/63 112M2B / 112M2C	1806	282
	0.8	40681	0.9	3692.48	-	-	-	-			
	0.9	35366	1.1	3210.12	-	-	-	-			
	1.0	29516	1.3	2679.06	-	-	-	-			
	1.2	25519	1.5	2316.27	-	-	-	-			
	1.4	22608	1.7	2052.10	-	-	-	-			
	1.6	19547	1.9	1774.21	-	-	-	-			
	0.6	63900	0.8	1623.67	-	-	-	-	PKD G 9390/62 132M6A	1830	282
	0.7	53281	1.0	1353.86	-	-	-	-			
	0.8	45857	1.1	1165.22	-	-	-	-			
	0.9	38541	1.4	979.31	-	-	-	-			
	1.1	32136	1.6	816.57	-	-	-	-			
	1.3	27659	1.9	702.80	-	-	-	-			
	1.5	23913	2.2	607.63	-	-	-	-			
	1.7	21186	2.5	538.33	-	-	-	-			
	1.9	18663	2.8	474.22	-	-	-	-			

P_1 [kW]	n_2 [Min^{-1}]	M_2 [Nm]	f_B	i_{ges}	F_R [N]	F_A [N]	$F_{R\,GR}$ [N]	$F_{A\,GR}$ [N]	Tip / Type / Typ IE2 / IE3	Kg	mm
4.00	0.9	39873	1.3	1623.67	-	-	-	-	PKD G 9390/62 112M4C / 112M4D	1808	282
	1.0	33247	1.5	1353.86	-	-	-	-			
	1.2	28614	1.7	1165.22	-	-	-	-			
	1.4	24049	2.1	979.31	-	-	-	-			
	1.7	20053	2.5	816.57	-	-	-	-			
	2.0	17259	2.9	702.80	-	-	-	-			
	1.7	18537	2.0	1623.67	-	-	-	-	PKD G 9390/62 112M2B / 112M2C	1808	282
	2.1	15457	2.5	1353.86	-	-	-	-			
	2.4	13303	2.9	1165.22	-	-	-	-			
	0.8	44051	0.8	1119.32	128.0	70.0	160.0	70.0	PKD 9390/52 132M6A	1530	280
	1.1	33294	1.0	846.00	142.0	70.0	160.0	70.0			
	1.3	27806	1.2	706.54	147.0	70.0	160.0	70.0			
	1.5	23997	1.4	609.75	150.0	70.0	160.0	70.0			
	2.0	17484	1.9	444.25	154.0	70.0	160.0	70.0			
	2.3	15200	2.2	386.23	129.0	70.0	160.0	70.0			
	3.2	11075	3.0	281.40	129.0	70.0	160.0	70.0			
	1.0	34984	0.9	1424.59	102.0	70.0	160.0	70.0	PKD 9390/52 112M4C / 112M4D	1508	280
	1.3	27487	1.2	1119.32	128.0	70.0	160.0	70.0			
	1.7	20775	1.5	846.00	142.0	70.0	160.0	70.0			
	2.0	17351	1.8	706.54	147.0	70.0	160.0	70.0			
	2.3	14974	2.1	609.75	150.0	70.0	160.0	70.0			
	3.2	10910	2.9	444.25	154.0	70.0	160.0	70.0			
	1.3	24138	1.0	2114.30	102.0	70.0	-	-	PKD 9390/52 112M2B / 112M2C	1508	280
	1.6	20495	1.2	1795.13	102.0	70.0	-	-			
	2.0	16264	1.5	1424.59	102.0	70.0	160.0	70.0			
	2.5	12779	1.9	1119.32	128.0	70.0	160.0	70.0			
	3.3	9659	2.5	846.00	142.0	70.0	160.0	70.0			
	4.0	8066	3.0	706.54	147.0	70.0	160.0	70.0			
	3.0	12079	2.8	297.79	143.0	70.0	-	-	PKD 9390 132M6A	1454	270-271
	1.4	24544	0.9	623.65	106.0	65.0	120.0	65.0	PKD G 8390/52 132M6A	960	280
	2.1	17118	1.2	434.96	115.0	65.0	120.0	65.0			
	2.4	14934	1.4	379.47	117.0	65.0	120.0	65.0			
	3.3	10699	2.0	271.85	120.0	65.0	120.0	65.0			
	3.8	9302	2.3	236.35	83.0	65.0	120.0	65.0			
	1.5	22342	0.8	909.80	83.0	65.0	120.0	65.0	PKD G 8390/52 112M4C / 112M4D	938	280
	2.0	17554	1.0	714.84	99.0	65.0	120.0	65.0			
	2.2	15315	1.2	623.65	106.0	65.0	120.0	65.0			
	3.2	10681	1.7	434.96	115.0	65.0	120.0	65.0			
	3.7	9319	1.9	379.47	117.0	65.0	120.0	65.0			
	5.1	6676	2.7	271.85	120.0	65.0	120.0	65.0			
	1.9	16705	0.9	1463.24	83.0	65.0	120.0	65.0	PKD G 8390/52 112M2B / 112M2C	938	280
	2.3	13743	1.1	1203.73	83.0	65.0	120.0	65.0			
	3.1	10387	1.5	909.80	83.0	65.0	120.0	65.0			
	3.9	8161	1.9	714.84	99.0	65.0	120.0	65.0			
	4.5	7120	2.1	623.65	106.0	65.0	120.0	65.0			
	3.7	9699	1.4	246.45	94.0	60.0	95.0	60.0	PKD 8390/52 132M6A	710	280
	4.9	7175	1.9	182.32	95.0	60.0	95.0	60.0			
	6.1	5760	2.4	146.35	95.0	60.0	95.0	60.0			
	7.3	4866	2.6	123.64	95.0	60.0	95.0	60.0			
	5.7	6052	2.1	246.45	94.0	60.0	95.0	60.0	PKD 8390/52 112M4C / 112M4D	688	280
	7.7	4477	2.9	182.32	95.0	60.0	95.0	60.0			
	2.0	17487	0.8	444.35	86.0	60.0	95.0	60.0	PKD 8390/42 132M6A	685	280
	2.4	14955	0.9	379.99	89.0	60.0	95.0	60.0			
	3.1	11256	1.2	286.02	93.0	60.0	95.0	60.0			
	2.0	17314	0.8	705.03	80.0	60.0	95.0	60.0	PKD 8390/42 112M4C / 112M4D	663	280
	2.3	14806	0.9	602.92	76.0	60.0	95.0	60.0			
	3.2	10912	1.2	444.35	86.0	60.0	95.0	60.0			
	3.7	9331	1.4	379.99	89.0	60.0	95.0	60.0			
	4.9	7024	1.9	286.02	93.0	60.0	95.0	60.0			

P_1 [kW]	n_2 [Min^{-1}]	M_2 [Nm]	f_B	i_{ges}	F_R [N]	F_A [N]	$F_{R\,GR}$ [N]	$F_{A\,GR}$ [N]	Tip / Type / Typ IE2 / IE3	Kg	mm
4.00	2.8 3.3 4.0 4.6 6.3 7.4 9.8	11622 9652 8049 6883 5073 4338 3265	0.9 1.0 1.2 1.4 1.9 2.3 3.0	1017.96 845.40 705.03 602.92 444.35 379.99 286.02	80.0 80.0 80.0 76.0 86.0 89.0 93.0	60.0 60.0 60.0 60.0 60.0 60.0 60.0	95.0 95.0 95.0 95.0 95.0 95.0 95.0	60.0 60.0 60.0 60.0 60.0 60.0 60.0	PKD 8390/42 112M2B / 112M2C	663	280
	3.9 4.6	9357 7871	2.2 2.7	230.68 194.04	119.0 119.0	65.0 65.0	120.0 120.0	65.0 65.0	PKD G 8390 132M6A	884	266-267
	3.0 3.7 6.0 7.3 7.7	12034 9908 6037 4971 4728	1.1 1.4 2.3 2.7 2.9	296.68 244.25 148.84 122.54 116.55	91.0 91.0 91.0 91.0 91.0	60.0 60.0 60.0 60.0 60.0	95.0 95.0 95.0 95.0 95.0	60.0 60.0 60.0 60.0 60.0	PKD 8390 132M6A	634	262-263
	3.3 4.6 5.7 6.7	10603 7725 6181 5286	0.8 1.0 1.1 1.2	269.43 196.30 157.05 134.31	56.0 61.0 63.0 58.0	50.0 50.0 50.0 50.0	66.0 66.0 66.0 66.0	50.0 48.0 46.0 39.0	PKD 7390/42 132M6A	425	278
	5.2 7.1 8.9 10.4	6616 4821 3857 3298	1.3 1.5 1.7 1.9	269.43 196.30 157.05 134.31	56.0 61.0 63.0 58.0	50.0 50.0 50.0 50.0	66.0 66.0 66.0 66.0	50.0 48.0 46.0 46.0	PKD 7390/42 112M4C / 112M4D	403	278
	10.4 14.3 17.8	3076 2241 1793	2.1 2.5 2.7	269.43 196.30 157.05	56.0 61.0 63.0	50.0 50.0 50.0	66.0 66.0 66.0	50.0 48.0 46.0	PKD 7390/42 112M2B / 112M2C	403	278
	3.6 4.5	9448 7615	0.9 1.1	384.74 310.09	44.0 53.0	50.0 50.0	66.0 66.0	50.0 50.0	PKD 7390/32 112M4C / 112M4D	386	278
	4.7 5.9 7.3 9.0	6806 5376 4392 3540	0.9 1.2 1.5 1.8	596.10 470.91 384.74 310.09	44.0 44.0 44.0 53.0	50.0 50.0 50.0 50.0	66.0 66.0 66.0 66.0	50.0 50.0 50.0 50.0	PKD 7390/32 112M2B / 112M2C	386	278
	3.7 4.3 4.8 5.7 6.6 8.2 9.8 11.3	9960 8396 7576 6386 5543 4466 3709 3229	0.9 1.1 1.2 1.4 1.3 2.0 2.4 2.8	245.55 206.98 186.78 157.44 136.65 110.10 91.45 79.61	58.0 60.0 64.0 64.0 64.0 64.0 61.0 61.0	50.0 50.0 50.0 50.0 50.0 50.0 50.0 50.0	66.0 66.0 66.0 66.0 66.0 66.0 66.0 66.0	50.0 50.0 47.0 46.0 47.0 46.0 44.0 41.0	PKD 7390 132M6A	374	258-259
	5.7 6.8 10.2 12.7	6298 5309 3505 2824	1.3 1.6 1.9 3.0	245.55 206.98 136.65 110.10	58.0 60.0 64.0 64.0	50.0 50.0 50.0 50.0	66.0 66.0 66.0 66.0	50.0 50.0 47.0 46.0	PKD 7390 112M4C / 112M4D	352	258-259
	11.4 13.5 20.5	3010 2538 1675	2.1 2.5 3.0	245.55 206.98 136.65	58.0 60.0 64.0	50.0 50.0 50.0	66.0 66.0 66.0	50.0 50.0 47.0	PKD 7390 112M2B / 112M2C	352	258-259
	3.5 4.8 6.0 7.0	10168 7408 5927 5069	0.8 1.0 1.1 1.2	258.36 188.23 150.60 128.79	57.0 61.0 63.0 58.0	50.0 50.0 50.0 50.0	66.0 66.0 66.0 66.0	50.0 50.0 50.0 44.0	PKD 6390/42 132M6A	425	278
	5.4 7.4 9.3 10.9	6345 4622 3698 3163	1.3 1.6 1.7 1.9	258.36 188.23 150.60 128.79	57.0 61.0 63.0 58.0	50.0 50.0 50.0 50.0	66.0 66.0 66.0 66.0	50.0 50.0 50.0 44.0	PKD 6390/42 112M4C / 112M4D	403	278
	10.8 14.9 18.6	2950 2149 1719	2.1 2.5 2.7	258.36 188.23 150.60	57.0 61.0 63.0	50.0 50.0 50.0	66.0 66.0 66.0	50.0 50.0 50.0	PKD 6390/42 112M2B / 112M2C	403	278

P_1 [kW]	n_2 [Min^{-1}]	M_2 [Nm]	f_B	i_{ges}	F_R [N]	F_A [N]	$F_{R\,GR}$ [N]	$F_{A\,GR}$ [N]	Tip / Type / Typ IE2 / IE3	Kg	mm
4.00	3.8 4.7	9060 7302	0.9 1.1	368.93 297.35	47.0 54.0	50.0 50.0	66.0 66.0	50.0 50.0	PKD 6390/32 112M4C / 112M4D	386	278
	4.9 6.2 7.6 9.4	6526 5155 4212 3395	1.0 1.2 1.5 1.8	571.60 451.55 368.93 297.35	47.0 47.0 47.0 54.0	50.0 50.0 50.0 50.0	66.0 66.0 66.0 66.0	50.0 50.0 50.0 50.0	PKD 6390/32 112M2B / 112M2C	386	278
	3.8 4.5 5.0 6.0 7.0 8.5 10.3 11.8	9551 8041 7265 6116 5247 4283 3557 3096	0.9 1.1 1.2 1.4 1.3 2.0 2.4 2.8	235.45 198.23 179.11 150.79 129.36 105.58 87.70 76.33	58.0 61.0 63.0 63.0 63.0 64.0 61.0 61.0	50.0 50.0 50.0 50.0 50.0 50.0 50.0 50.0	66.0 66.0 66.0 66.0 66.0 66.0 66.0 66.0	50.0 50.0 50.0 50.0 50.0 50.0 46.0 45.0	PKD 6390 132M6A	374	254-255
	5.9 7.1 10.8 13.3	6039 5084 3318 2708	1.4 1.6 2.0 3.0	235.45 198.23 129.36 105.58	58.0 61.0 63.0 64.0	50.0 50.0 50.0 50.0	66.0 66.0 66.0 66.0	50.0 50.0 50.0 50.0	PKD 6390 112M4C / 112M4D	352	254-255
	11.9	2887	2.2	235.45	58.0	50.0	66.0	50.0	PKD 6390 112M2B / 112M2C	352	254-255
	6.1 8.5	5748 4142	0.8 1.2	228.99 165.02	18.0 38.0	45.0 45.0	38.0 -	39.0 -	PKD 5490 112M4C / 112M4D	230	250-251
	8.0 10.6 12.2 17.0	4127 3131 2709 1952	0.9 1.2 1.3 1.9	348.85 264.64 228.99 165.02	18.0 18.0 18.0 38.0	45.0 45.0 45.0 45.0	38.0 - 38.0 -	45.0 - 39.0 -	PKD 5490 112M2B / 112M2C	230	250-251
	7.5 8.8 10.2 12.5 14.4 16.5 20.0	4868 4158 3574 2928 2533 2213 1825	1.0 1.2 1.4 1.7 2.0 2.3 2.8	120.01 102.50 88.12 72.18 62.45 54.55 45.00	34.0 36.0 36.0 37.0 38.0 20.0 20.0	45.0 45.0 45.0 45.0 45.0 45.0 45.0	38.0 38.0 38.0 38.0 38.0 38.0 38.0	36.0 35.0 34.0 33.0 32.0 31.0 29.0	PKD 5390 132M6A	234	246-247
	5.7 7.1 8.3 9.6 11.7 13.7 15.9 19.4 22.4	6344 5088 4346 3727 3078 2629 2260 1851 1602	0.8 0.9 1.1 1.3 1.6 1.8 2.1 2.6 3.0	247.36 198.37 169.43 145.30 120.01 102.50 88.12 72.18 62.45	26.0 25.0 29.0 32.0 34.0 36.0 36.0 37.0 38.0	45.0 45.0 45.0 45.0 45.0 45.0 45.0 45.0 45.0	38.0 38.0 38.0 38.0 38.0 38.0 38.0 38.0 38.0	43.0 39.0 38.0 37.0 36.0 35.0 34.0 33.0 32.0	PKD 5390 112M4C / 112M4D	212	246-247
	9.7 11.3 14.1 16.5 19.3 23.3 27.3	3551 3033 2432 2077 1781 1471 1257	1.0 1.2 1.5 1.8 1.5 2.5 2.9	289.62 247.36 198.37 169.43 145.30 120.01 102.50	26.0 26.0 25.0 29.0 32.0 34.0 36.0	45.0 45.0 45.0 45.0 45.0 45.0 45.0	38.0 38.0 38.0 38.0 38.0 38.0 38.0	43.0 43.0 39.0 38.0 37.0 36.0 35.0	PKD 5390 112M2B / 112M2C	212	246-247
	13.7 16.3	2415 2036	0.9 1.0	204.13 172.07	17.0 17.0	40.0 40.0	- 28.0	- 20.0	PKD 4490 112M2B / 112M2C	152	242-243

P_1 [kW]	n_2 [Min^{-1}]	M_2 [Nm]	f_B	i_{ges}	F_R [N]	F_A [N]	$F_{R\,GR}$ [N]	$F_{A\,GR}$ [N]	Tip / Type / Typ IE2 / IE3	Kg	mm
4.00	9.4	3877	0.8	95.57	23.0	40.0	28.0	18.0	PKD 4390 132M6A	159	238-239
	10.4	3509	0.8	86.50	24.0	40.0	28.0	18.0			
	11.8	3086	1.0	76.08	25.0	40.0	28.0	18.0			
	13.1	2779	1.1	68.52	26.0	40.0	28.0	18.0			
	14.2	2564	1.1	63.21	26.0	40.0	28.0	18.0			
	16.2	2258	1.3	55.67	27.0	40.0	28.0	18.0			
	18.9	1931	1.5	47.61	27.0	40.0	28.0	17.0			
	22.2	1645	1.8	40.56	27.0	40.0	28.0	17.0			
	26.2	1395	2.1	34.38	19.0	40.0	28.0	17.0			
	32.2	1133	2.6	27.93	19.0	40.0	28.0	16.0			
	37.7	969	2.9	23.88	19.0	40.0	28.0	15.0			
	10.5	3408	0.8	132.86	17.0	40.0	28.0	17.0	PKD 4390 112M4C / 112M4D	137	238-239
	11.9	3022	0.8	117.81	19.0	40.0	28.0	18.0			
	14.6	2451	1.1	95.57	23.0	40.0	28.0	18.0			
	16.2	2219	1.3	86.50	24.0	40.0	28.0	18.0			
	18.4	1951	1.4	76.08	25.0	40.0	28.0	18.0			
	20.4	1757	1.6	68.52	26.0	40.0	28.0	18.0			
	22.1	1621	1.7	63.21	26.0	40.0	28.0	18.0			
	25.1	1428	2.0	55.67	27.0	40.0	28.0	18.0			
	29.4	1221	2.3	47.61	27.0	40.0	28.0	17.0			
	34.5	1040	2.7	40.56	27.0	40.0	28.0	17.0			
	14.4	2392	0.9	195.09	17.0	40.0	28.0	23.0	PKD 4390 112M2B / 112M2C	137	238-239
	17.5	1961	1.1	159.93	17.0	40.0	28.0	20.0			
	21.1	1629	1.3	132.86	17.0	40.0	28.0	17.0			
	23.8	1444	1.3	117.81	19.0	40.0	28.0	18.0			
	29.3	1172	1.8	95.57	23.0	40.0	28.0	18.0			
	32.4	1060	2.0	86.50	24.0	40.0	28.0	18.0			
	36.8	933	2.3	76.08	25.0	40.0	28.0	18.0			
	40.9	840	2.5	68.52	26.0	40.0	28.0	18.0			
	44.3	775	2.7	63.21	26.0	40.0	28.0	18.0			
	18.0	2026	0.8	49.94	7.0	12.0	15.0	9.0	PKD 3390 132M6A	112	230-231
	18.9	1934	0.8	47.67	7.0	12.0	15.0	9.0			
	22.3	1638	1.0	40.37	8.0	13.0	15.0	9.0			
	30.3	1204	1.3	29.67	8.0	13.0	15.0	9.0			
	35.9	1017	1.5	25.06	8.0	12.0	15.0	9.0			
	37.6	970	1.7	23.92	8.0	12.0	15.0	9.0			
	44.4	821	1.9	20.25	8.0	12.0	15.0	9.0			
	52.6	694	2.2	17.10	1.0	14.0	15.0	9.0			
	57.2	638	2.3	15.73	1.0	14.0	15.0	9.0			
	66.5	549	2.6	13.54	1.0	14.0	15.0	8.0			
	71.0	514	2.0	12.68	1.0	14.0	15.0	8.0			
	83.8	436	2.2	10.74	1.0	14.0	15.0	8.0			
	105.9	345	2.7	8.50	1.0	14.0	15.0	7.0			
	18.4	1947	0.8	75.92	1.0	10.0	12.0	8.0	PKD 3390 112M4C / 112M4D	90	230-231
	21.8	1644	0.9	64.11	6.0	11.0	15.0	9.0			
	23.7	1517	1.0	59.15	7.0	12.0	15.0	9.0			
	28.0	1281	1.2	49.94	7.0	12.0	15.0	9.0			
	29.4	1223	1.3	47.67	7.0	12.0	15.0	9.0			
	34.7	1035	1.5	40.37	8.0	13.0	15.0	9.0			
	36.8	977	1.6	38.09	8.0	13.0	15.0	9.0			
	39.3	914	1.7	35.65	8.0	13.0	15.0	9.0			
	47.2	761	2.0	29.67	8.0	13.0	15.0	9.0			
	55.9	643	2.3	25.06	8.0	12.0	15.0	9.0			
	58.5	614	2.5	23.92	8.0	12.0	15.0	9.0			
	69.1	519	2.9	20.25	8.0	12.0	15.0	9.0			
	25.2	1360	0.9	110.94	1.0	10.0	15.0	12.0	PKD 3390 112M2B / 112M2C	90	230-231
	29.9	1148	1.0	93.67	1.0	10.0	13.0	10.0			
	33.3	1032	1.1	84.16	1.0	10.0	15.0	10.0			
	36.9	931	1.3	75.92	1.0	10.0	12.0	8.0			
	43.7	786	1.5	64.11	6.0	11.0	15.0	9.0			
	47.3	725	1.6	59.15	7.0	12.0	15.0	9.0			
	56.1	612	1.9	49.94	7.0	12.0	15.0	9.0			
	58.7	584	2.0	47.67	7.0	12.0	15.0	9.0			
	69.4	495	2.4	40.37	8.0	13.0	15.0	9.0			
	73.5	467	2.5	38.09	8.0	13.0	15.0	9.0			
	78.5	437	2.7	35.65	8.0	13.0	15.0	9.0			

P_1 [kW]	n_2 [Min^{-1}]	M_2 [Nm]	f_B	i_{ges}	F_R [N]	F_A [N]	$F_{R\,GR}$ [N]	$F_{A\,GR}$ [N]	Tip / Type / Typ IE2 / IE3	Kg	mm
4.00	35.3	1018	0.8	39.70	0.3	11.0	6.0	9.0	PKD 2390 112M4C / 112M4D	70	222-223
	42.1	854	1.0	33.28	0.4	11.0	8.0	9.0			
	44.5	806	1.0	31.43	3.0	11.0	9.0	9.0			
	47.9	749	1.1	29.22	4.0	12.0	10.0	9.0			
	53.6	670	1.3	26.14	6.0	12.0	11.0	9.0			
	57.0	630	1.4	24.58	6.0	11.0	11.0	9.0			
	62.3	577	1.4	22.48	7.0	12.0	11.0	9.0			
	70.3	511	1.5	19.92	7.0	11.0	12.0	9.0			
	79.9	449	1.6	17.52	7.0	11.0	12.0	8.0			
	85.9	418	1.5	16.29	7.0	11.0	12.0	8.0			
	96.0	374	1.6	14.58	6.0	11.0	12.0	8.0			
	111.7	321	1.7	12.53	6.0	10.0	12.0	8.0			
	126.0	285	1.8	11.11	6.0	10.0	12.0	8.0			
	159.3	225	2.1	8.79	6.0	9.0	12.0	8.0			
	42.1	815	0.8	66.47	3.0	11.0	8.0	11.0	PKD 2390 112M2B / 112M2C	70	222-223
	48.1	714	0.9	58.24	3.0	11.0	9.0	11.0			
	53.7	639	1.0	52.11	3.0	11.0	6.0	10.0			
	57.2	601	1.1	48.99	3.0	11.0	7.0	10.0			
	62.5	549	1.2	44.80	3.0	11.0	9.0	10.0			
	70.5	487	1.3	39.70	3.0	11.0	6.0	9.0			
	84.1	408	1.6	33.28	4.0	11.0	8.0	9.0			
	89.1	385	1.6	31.43	3.0	11.0	9.0	9.0			
	95.8	358	1.8	29.22	4.0	12.0	10.0	9.0			
	107.1	320	2.0	26.14	6.0	12.0	11.0	9.0			
	113.9	301	2.2	24.58	6.0	11.0	11.0	9.0			
	124.6	276	2.2	22.48	7.0	12.0	11.0	9.0			
	140.6	244	2.4	19.92	7.0	11.0	12.0	9.0			
	159.8	215	2.5	17.52	7.0	11.0	12.0	8.0			
	171.9	200	2.4	16.29	7.0	11.0	12.0	8.0			
	192.0	179	2.5	14.58	6.0	11.0	12.0	8.0			
	223.5	154	2.7	12.53	6.0	10.0	12.0	8.0			
	252.0	136	2.9	11.11	6.0	10.0	12.0	8.0			
	46.0	781	0.8	30.44	7.0	16.0	9.0	16.0	PKD G 1390 112M4C / 112M4D	63	214-215
	53.2	675	0.9	26.30	6.0	14.0	9.0	14.0			
	60.4	594	0.9	23.16	7.0	14.0	9.0	14.0			
	68.3	526	1.1	20.51	8.0	14.0	9.0	14.0			
	80.0	449	1.2	17.49	9.0	14.0	9.0	14.0			
	91.7	392	1.3	15.27	9.0	14.0	9.0	14.0			
	112.1	320	1.6	12.49	9.0	14.0	9.0	14.0			
	60.7	566	0.8	46.16	7.0	16.0	9.0	18.0	PKD G 1390 112M2B / 112M2C	63	214-215
	68.5	501	0.9	40.87	7.0	16.0	9.0	18.0			
	80.3	427	1.1	34.86	7.0	16.0	9.0	16.0			
	92.0	373	1.2	30.44	7.0	16.0	9.0	16.0			
	106.5	322	1.4	26.30	6.0	14.0	9.0	14.0			
	120.9	284	1.4	23.16	7.0	14.0	9.0	14.0			
	136.5	251	1.8	20.51	8.0	14.0	9.0	14.0			
	160.1	214	1.9	17.49	9.0	14.0	9.0	14.0			
	183.4	187	2.1	15.27	9.0	14.0	9.0	14.0			
	224.2	153	2.6	12.49	9.0	14.0	9.0	14.0			
	80.0	449	0.8	17.49	4.0	14.0	8.0	14.0	PKD 1390 112M4C / 112M4D	62	206-207
	91.7	392	1.0	15.27	5.0	14.0	9.0	14.0			
	151.2	238	0.8	9.26	7.0	13.0	9.0	13.0			
	173.1	207	0.9	8.09	7.0	13.0	9.0	13.0			
	88.9	386	0.8	31.48	4.0	14.0	8.0	18.0	PKD 1390 112M2B / 112M2C	62	206-207
	101.0	340	0.9	27.72	4.0	18.0	9.0	18.0			
	114.1	301	1.0	24.55	4.0	16.0	8.0	16.0			
	133.8	257	1.2	20.93	4.0	16.0	8.0	16.0			
	160.1	214	1.3	17.49	4.0	14.0	8.0	14.0			
	183.4	187	1.5	15.27	5.0	14.0	9.0	14.0			
	228.2	150	1.1	12.27	7.0	13.0	9.0	14.0			
	257.8	133	1.1	10.86	7.0	13.0	9.0	14.0			
	302.4	114	1.3	9.26	7.0	13.0	9.0	13.0			
	346.1	99	1.4	8.09	7.0	13.0	9.0	13.0			

P_1 [kW]	n_2 [Min^{-1}]	M_2 [Nm]	f_B	i_{ges}	F_R [N]	F_A [N]	$F_{R\,GR}$ [N]	$F_{A\,GR}$ [N]	Tip / Type / Typ IE2 / IE3	Kg	mm
4.00	45.6	812	0.8	19.73	6.2	12.0	-	-	PKD H 5290 132M6A	93	202-203
	50.4	735	0.8	17.84	6.7	12.0	-	-			
	57.7	643	1.0	15.61	6.9	11.9	-	-			
	64.8	572	1.0	13.88	6.9	11.6	-	-			
	72.6	511	1.1	12.40	6.8	11.3	-	-			
	82.9	447	1.2	10.85	6.6	10.9	-	-			
	93.4	397	1.3	9.64	6.4	10.5	-	-			
	105.1	353	1.5	8.56	6.3	10.2	-	-			
	118.6	313	1.6	7.59	6.1	9.8	-	-			
	140.2	264	1.8	6.42	5.9	9.3	-	-			
	147.3	252	1.8	6.11	3.2	12.0	-	-			
	165.7	224	2.0	5.43	3.2	12.0	-	-			
	187.5	198	2.2	4.80	3.2	12.0	-	-			
	43.7	839	0.8	32.02	4.8	12.0	-	-	PKD H 5290 112M4C / 112M4D	71	202-203
	49.2	745	0.8	28.46	2.8	12.0	-	-			
	55.2	665	1.0	25.37	4.5	12.0	-	-			
	63.1	582	1.1	22.20	5.6	12.0	-	-			
	71.0	517	1.2	19.73	6.2	12.0	-	-			
	78.5	467	1.3	17.84	6.7	12.0	-	-			
	89.7	409	1.4	15.61	6.9	11.9	-	-			
	100.9	364	1.5	13.88	6.9	11.6	-	-			
	112.9	325	1.6	12.40	6.8	11.3	-	-			
	129.0	284	1.8	10.85	6.6	10.9	-	-			
	145.2	253	2.0	9.64	6.4	10.5	-	-			
	163.6	224	2.2	8.56	6.3	10.2	-	-			
	184.5	199	2.4	7.59	6.1	9.8	-	-			
	218.1	168	2.7	6.42	5.9	9.3	-	-			
	76.5	465	1.1	36.59	4.8	12.0	-	-	PKD H 5290 112M2B / 112M2C	71	202-203
	87.4	407	1.2	32.02	4.8	12.0	-	-			
	98.4	362	1.3	28.46	2.8	12.0	-	-			
	110.4	322	1.5	25.37	4.5	12.0	-	-			
	126.1	282	1.7	22.20	5.6	12.0	-	-			
	141.9	251	1.8	19.73	6.2	12.0	-	-			
	157.0	227	2.0	17.84	6.7	12.0	-	-			
	179.4	198	2.2	15.61	6.9	11.9	-	-			
	201.7	176	2.3	13.88	6.9	11.6	-	-			
	225.8	158	2.5	12.40	6.8	11.3	-	-			
	258.1	138	2.8	10.85	6.6	10.9	-	-			
	82.0	452	0.8	10.98	5.0	10.4	-	-	PKD F 4290 132M6A	81	198-199
	92.2	402	0.8	9.76	5.3	10.0	-	-			
	103.8	357	0.9	8.67	5.5	9.8	-	-			
	116.7	318	1.0	7.71	5.7	9.4	-	-			
	132.4	280	1.1	6.80	5.8	9.1	-	-			
	152.0	244	1.2	5.92	5.7	8.7	-	-			
	165.1	224	1.2	5.45	2.1	12.0	-	-			
	185.6	200	1.4	4.85	2.1	12.0	-	-			
	87.1	421	0.9	16.08	3.3	11.4	-	-	PKD F 4290 112M4C / 112M4D	59	198-199
	99.5	369	0.9	14.07	4.2	11.0	-	-			
	110.8	331	1.0	12.63	4.6	10.7	-	-			
	127.5	288	1.2	10.98	5.0	10.4	-	-			
	143.4	256	1.3	9.76	5.3	10.0	-	-			
	161.5	227	1.4	8.67	5.5	9.8	-	-			
	181.6	202	1.5	7.71	5.7	9.4	-	-			
	205.9	178	1.7	6.80	5.8	9.1	-	-			
	236.5	155	1.8	5.92	5.7	8.7	-	-			
	120.4	296	1.0	23.26	3.3	11.4	-	-	PKD F 4290 112M2B / 112M2C	59	198-199
	137.6	259	1.0	20.35	3.3	11.4	-	-			
	154.8	230	1.1	18.09	3.3	11.4	-	-			
	174.1	204	1.4	16.08	3.3	11.4	-	-			
	199.0	179	1.4	14.07	4.2	11.0	-	-			
	221.7	160	1.6	12.63	4.6	10.7	-	-			
	255.0	139	1.8	10.98	5.0	10.4	-	-			
	286.9	124	2.0	9.76	5.3	10.0	-	-			
	323.0	110	2.2	8.67	5.5	9.8	-	-			
	363.2	98	2.4	7.71	5.7	9.4	-	-			
	411.8	86	2.6	6.80	5.8	9.1	-	-			
	473.0	75	2.8	5.92	5.7	8.7	-	-			

P_1 [kW]	n_2 [Min^{-1}]	M_2 [Nm]	f_B	i_{ges}	F_R [N]	F_A [N]	$F_{R\,GR}$ [N]	$F_{A\,GR}$ [N]	Tip / Type / Typ IE2 / IE3	Kg	mm
5.50	0.8	58577	0.9	1774.21	-	-	-	-	PKD G 9390/63 132S4A / 132S4B	1828	282
	0.9	48629	0.8	3210.12	-	-	-	-	PKD G 9390/63 132S2B / 132S2C	1828	282
	1.0	40584	0.9	2679.06	-	-	-	-			
	1.2	35088	1.1	2316.27	-	-	-	-			
	1.4	31086	1.2	2052.10	-	-	-	-			
	1.6	26877	1.4	1774.21	-	-	-	-			
	0.8	63054	0.8	1165.22	-	-	-	-	PKD G 9390/62 132M6B	1830	282
	0.9	52994	1.0	979.31	-	-	-	-			
	1.1	44187	1.2	816.57	-	-	-	-			
	1.3	38031	1.4	702.80	-	-	-	-			
	1.5	32881	1.6	607.63	-	-	-	-			
	1.7	29131	1.8	538.33	-	-	-	-			
	1.9	25662	2.0	474.22	-	-	-	-			
	2.1	23323	2.3	431.00	-	-	-	-			
	2.4	20073	2.6	370.95	-	-	-	-			
	2.8	17355	3.0	320.72	-	-	-	-			
	0.9	54825	0.9	1623.67	-	-	-	-	PKD G 9390/62 132S4A / 132S4B	1830	282
	1.0	45715	1.1	1353.86	-	-	-	-			
	1.2	39345	1.3	1165.22	-	-	-	-			
	1.4	33067	1.5	979.31	-	-	-	-			
	1.7	27572	1.8	816.57	-	-	-	-			
	2.0	23731	2.1	702.80	-	-	-	-			
	2.3	20517	2.4	607.63	-	-	-	-			
	2.6	18177	2.8	538.33	-	-	-	-			
	1.7	25488	1.5	1623.67	-	-	-	-	PKD G 9390/62 132S2B / 132S2C	1830	282
	2.1	21253	1.8	1353.86	-	-	-	-			
	2.4	18292	2.1	1165.22	-	-	-	-			
	2.9	15373	2.5	979.31	-	-	-	-			
	3.4	12819	3.0	816.57	-	-	-	-			
	1.3	38233	0.9	706.54	135.0	70.0	160.0	70.0	PKD 9390/52 132M6B	1530	280
	1.5	32996	1.0	609.75	143.0	70.0	160.0	70.0			
	2.0	24040	1.4	444.25	150.0	70.0	160.0	70.0			
	2.3	20900	1.6	386.23	152.0	70.0	160.0	70.0			
	3.2	15228	2.2	281.40	102.0	70.0	160.0	70.0			
	1.3	37795	0.8	1119.32	93.0	70.0	160.0	70.0	PKD 9390/52 132S4A / 132S4B	1530	280
	1.7	28566	1.1	846.00	124.0	70.0	160.0	70.0			
	2.0	23857	1.3	706.54	135.0	70.0	160.0	70.0			
	2.3	20589	1.6	609.75	143.0	70.0	160.0	70.0			
	3.2	15001	2.1	444.25	150.0	70.0	160.0	70.0			
	3.6	13041	2.5	386.23	152.0	70.0	160.0	70.0			
	1.6	28180	0.9	1795.13	93.0	70.0	-	-	PKD 9390/52 132S2B / 132S2C	1530	280
	2.0	22363	1.1	1424.59	93.0	70.0	-	-			
	2.5	17571	1.4	1119.32	93.0	70.0	160.0	70.0			
	3.3	13281	1.8	846.00	124.0	70.0	160.0	70.0			
	4.0	11091	2.2	706.54	135.0	70.0	160.0	70.0			
	4.6	9572	2.5	609.75	143.0	70.0	160.0	70.0			
	3.0	16609	2.0	297.79	143.0	70.0	-	-	PKD 9390 132M6B	1454	270-271
	3.6	14125	2.4	253.26	148.0	70.0	-	-			
	4.7	10502	3.0	297.79	143.0	70.0	-	-	PKD 9390 132S4A / 132S4B	1454	270-271
	2.1	23537	0.9	434.96	107.0	65.0	120.0	65.0	PKD G 8390/52 132M6B	960	280
	2.4	20534	1.0	379.47	111.0	65.0	120.0	65.0			
	3.3	14711	1.4	271.85	117.0	65.0	120.0	65.0			
	3.8	12790	1.6	236.35	118.0	65.0	120.0	65.0			
	5.2	9318	2.3	172.19	83.0	65.0	120.0	65.0			
	6.2	7838	2.4	144.85	83.0	65.0	120.0	65.0			
	2.2	21058	0.9	623.65	87.0	65.0	120.0	65.0	PKD G 8390/52 132S4A / 132S4B	960	280
	3.2	14687	1.2	434.96	107.0	65.0	120.0	65.0			
	3.7	12813	1.4	379.47	111.0	65.0	120.0	65.0			
	5.1	9179	2.0	271.85	117.0	65.0	120.0	65.0			
	5.9	7981	2.3	236.35	118.0	65.0	120.0	65.0			

P_1 [kW]	n_2 [Min^{-1}]	M_2 [Nm]	f_B	i_{ges}	F_R [N]	F_A [N]	$F_{R\,GR}$ [N]	$F_{A\,GR}$ [N]	Tip / Type / Typ IE2 / IE3	Kg	mm
5.50	2.3 3.1 3.9 4.5 6.4 7.4	18896 14282 11222 9790 6828 5957	0.8 1.1 1.4 1.6 2.2 2.6	1203.73 909.80 714.84 623.65 434.96 379.47	87.0 87.0 87.0 87.0 107.0 111.0	65.0 65.0 65.0 65.0 65.0 65.0	120.0 120.0 120.0 120.0 120.0 120.0	65.0 65.0 65.0 65.0 65.0 65.0	PKD G 8390/52 132S2B / 132S2C	960	280
	3.7 4.9 6.1 7.3	13336 9866 7919 6691	1.0 1.4 1.7 1.9	246.45 182.32 146.35 123.64	94.0 95.0 95.0 79.0	60.0 60.0 60.0 60.0	95.0 95.0 95.0 95.0	60.0 60.0 60.0 60.0	PKD 8390/52 132M6B	710	280
	5.7 7.7 9.6 11.3	8322 6156 4942 4175	1.6 2.1 2.6 2.9	246.45 182.32 146.35 123.64	94.0 - 95.0 79.0	60.0 - 60.0 60.0	95.0 95.0 95.0 95.0	60.0 60.0 60.0 60.0	PKD 8390/52 132S4A / 132S4B	710	280
	11.4	3869	2.6	246.45	94.0	60.0	95.0	60.0	PKD 8390/52 132S2B / 132S2C	710	280
	3.1	15478	0.9	286.02	71.0	60.0	95.0	60.0	PKD 8390/42 132M6B	685	280
	3.2 3.7 4.9	15004 12831 9658	0.9 1.0 1.3	444.35 379.99 286.02	76.0 81.0 71.0	60.0 60.0 60.0	95.0 95.0 95.0	60.0 60.0 60.0	PKD 8390/42 132S4A / 132S4B	685	280
	4.0 4.6 6.3 7.4 9.8	11068 9465 6975 5965 4490	0.9 1.0 1.4 1.7 2.2	705.03 602.92 444.35 379.99 286.02	76.0 76.0 76.0 81.0 71.0	60.0 60.0 60.0 60.0 60.0	95.0 95.0 95.0 95.0 95.0	60.0 60.0 60.0 60.0 60.0	PKD 8390/42 132S2B / 132S2C	685	280
	3.9 4.6	12866 10822	1.6 1.9	230.68 194.04	119.0 119.0	65.0 65.0	120.0 120.0	65.0 65.0	PKD G 8390 132M6B	884	266-267
	6.1 7.2	8135 6843	2.5 2.9	230.68 194.04	119.0 119.0	65.0 65.0	120.0 120.0	65.0 65.0	PKD G 8390 132S4A / 132S4B	884	266-267
	3.0 3.7 6.0 7.3 7.7 9.4 10.8	16547 13623 8301 6835 6500 5352 4626	0.8 1.0 1.6 2.0 2.1 2.6 3.0	296.68 244.25 148.84 122.54 116.55 95.96 82.95	88.0 91.0 95.0 91.0 91.0 91.0 91.0	60.0 60.0 60.0 60.0 60.0 60.0 60.0	95.0 95.0 95.0 95.0 95.0 95.0 95.0	60.0 60.0 60.0 60.0 60.0 60.0 60.0	PKD 8390 132M6B	634	262-263
	4.7 5.7 9.4 11.4	10463 8614 5249 4322	1.2 1.5 2.5 3.0	296.68 244.25 148.84 122.54	88.0 91.0 95.0 91.0	60.0 60.0 60.0 60.0	95.0 95.0 95.0 95.0	60.0 60.0 60.0 60.0	PKD 8390 132S4A / 132S4B	634	262-263
	9.4 11.5	5001 4117	1.9 2.4	296.68 244.25	88.0 91.0	60.0 60.0	95.0 95.0	60.0 60.0	PKD 8390 132S2B / 132S2C	634	262-263
	5.7 6.7	8499 7268	0.8 0.9	157.05 134.31	60.0 58.0	50.0 50.0	66.0 66.0	43.0 39.0	PKD 7390/42 132M6B	425	278
	5.2 7.1 8.9 10.4	9098 6628 5303 4535	0.9 1.1 1.2 1.4	269.43 196.30 157.05 134.31	46.0 56.0 60.0 58.0	50.0 50.0 50.0 50.0	66.0 66.0 66.0 66.0	45.0 44.0 43.0 39.0	PKD 7390/42 132S4A / 132S4B	425	278
	10.4 14.3 17.8 20.8	4230 3082 2465 2108	1.5 1.8 2.0 2.2	269.43 196.30 157.05 134.31	46.0 56.0 60.0 58.0	50.0 50.0 50.0 50.0	66.0 66.0 66.0 66.0	45.0 44.0 43.0 46.0	PKD 7390/42 132S2B / 132S2C	425	278
	4.5	10471	0.8	310.09	37.0	50.0	66.0	48.0	PKD 7390/32 132S4A / 132S4B	408	278

PGR DRIVE TECHNOLOGIES

P_1 [kW]	n_2 [Min^{-1}]	M_2 [Nm]	f_B	i_{ges}	F_R [N]	F_A [N]	$F_{R\,GR}$ [N]	$F_{A\,GR}$ [N]	Tip / Type / Typ IE2 / IE3	Kg	mm
5.50	5.9 7.3 9.0	7392 6040 4868	0.9 1.1 1.3	470.91 384.74 310.09	37.0 37.0 37.0	50.0 50.0 50.0	66.0 66.0 66.0	50.0 50.0 48.0	PKD 7390/32 132S2B / 132S2C	408	278
	4.3 4.8 5.7 6.6 8.2 9.8 11.3 12.8 15.4	11544 10417 8781 7622 6141 5101 4440 3909 3259	0.8 0.9 1.0 0.9 1.5 1.7 2.0 2.3 2.7	206.98 186.78 157.44 136.65 110.10 91.45 79.61 70.08 58.44	55.0 57.0 60.0 61.0 63.0 64.0 64.0 58.0 58.0	50.0 50.0 50.0 50.0 50.0 50.0 50.0 50.0 50.0	66.0 66.0 66.0 66.0 66.0 66.0 66.0 66.0 66.0	47.0 47.0 46.0 44.0 43.0 42.0 41.0 40.0 37.0	PKD 7390 132M6B	374	258-259
	5.7 6.8 7.5 8.9 10.2 12.7 15.3 17.6	8660 7300 6587 5552 4819 3883 3225 2808	1.0 1.2 1.3 1.5 1.4 2.2 2.6 3.0	245.55 206.98 186.78 157.44 136.65 110.10 91.45 79.61	50.0 55.0 57.0 60.0 61.0 63.0 64.0 64.0	50.0 50.0 50.0 50.0 50.0 50.0 50.0 50.0	66.0 66.0 66.0 66.0 66.0 66.0 66.0 66.0	48.0 47.0 47.0 46.0 44.0 43.0 42.0 41.0	PKD 7390 132S4A / 132S4B	374	258-259
	11.4 13.5 15.0 17.8 20.5	4139 3489 3149 2654 2304	1.6 1.9 2.1 2.4 2.2	245.55 206.98 186.78 157.44 136.65	50.0 55.0 57.0 60.0 61.0	50.0 50.0 50.0 50.0 50.0	66.0 66.0 66.0 66.0 66.0	48.0 47.0 47.0 46.0 44.0	PKD 7390 132S2B / 132S2C	374	258-259
	6.0 7.0	8149 6969	0.8 0.9	150.60 128.79	63.0 58.0	50.0 50.0	66.0 66.0	50.0 44.0	PKD 6390/42 132M6B	425	278
	5.4 7.4 9.3 10.9	8724 6356 5085 4349	0.9 1.1 1.2 1.4	258.36 188.23 150.60 128.79	48.0 49.0 63.0 58.0	50.0 50.0 50.0 50.0	66.0 66.0 66.0 66.0	50.0 50.0 50.0 44.0	PKD 6390/42 132S4A / 132S4B	425	278
	10.8 14.9 18.6 21.7	4056 2955 2364 2022	1.5 1.9 2.0 2.3	258.36 188.23 150.60 128.79	48.0 49.0 63.0 58.0	50.0 50.0 50.0 50.0	66.0 66.0 66.0 66.0	50.0 50.0 50.0 44.0	PKD 6390/42 132S2B / 132S2C	425	278
	4.7	10040	0.8	297.35	42.0	45.0	66.0	50.0	PKD 6390/32 132S4A / 132S4B	408	278
	6.2 7.6 9.4	7088 5791 4668	0.9 1.1 1.3	451.55 368.93 297.35	42.0 42.0 42.0	45.0 45.0 45.0	66.0 66.0 66.0	50.0 50.0 50.0	PKD 6390/32 132S2B / 132S2C	408	278
	4.5 5.0 6.0 7.0 8.5 10.3 11.8 13.4 16.1	11056 9990 8410 7215 5889 4891 4257 3748 3125	0.8 0.9 1.0 1.0 1.5 1.8 2.0 2.3 2.8	198.23 179.11 150.79 129.36 105.58 87.70 76.33 67.20 56.03	56.0 58.0 60.0 61.0 63.0 64.0 64.0 58.0 58.0	50.0 50.0 50.0 50.0 50.0 50.0 50.0 50.0 50.0	66.0 66.0 66.0 66.0 66.0 66.0 66.0 66.0 66.0	50.0 50.0 50.0 50.0 48.0 46.0 45.0 44.0 41.0	PKD 6390 132M6B	374	254-255
	5.9 7.1 7.8 9.3 10.8 13.3 16.0 18.3	8304 6991 6317 5318 4562 3723 3093 2692	1.0 1.2 1.3 1.5 1.4 2.2 2.7 3.0	235.45 198.23 179.11 150.79 129.36 105.58 87.70 76.33	52.0 56.0 58.0 60.0 61.0 63.0 64.0 64.0	50.0 50.0 50.0 50.0 50.0 50.0 50.0 50.0	66.0 66.0 66.0 66.0 66.0 66.0 66.0 66.0	50.0 50.0 50.0 50.0 50.0 48.0 46.0 45.0	PKD 6390 132S4A / 132S4B	374	254-255
	11.9 14.1 15.6 18.6 21.6	3969 3342 3019 2542 2181	1.6 1.9 2.1 2.5 2.3	235.45 198.23 179.11 150.79 129.36	52.0 56.0 58.0 60.0 61.0	50.0 50.0 50.0 50.0 50.0	66.0 66.0 66.0 66.0 66.0	50.0 50.0 50.0 50.0 50.0	PKD 6390 132S2B / 132S2C	374	254-255

P_1 [kW]	n_2 [Min^{-1}]	M_2 [Nm]	f_B	i_{ges}	F_R [N]	F_A [N]	$F_{R\,GR}$ [N]	$F_{A\,GR}$ [N]	Tip / Type / Typ IE2 / IE3	Kg	mm
5.50	7.5	6693	0.8	120.01	30.0	45.0	38.0	33.0	PKD 5390 132M6B	234	246-247
	8.8	5717	0.9	102.50	32.0	45.0	38.0	33.0			
	10.2	4915	1.0	88.12	34.0	45.0	38.0	32.0			
	12.5	4026	1.3	72.18	36.0	45.0	38.0	31.0			
	14.4	3483	1.4	62.45	37.0	45.0	38.0	31.0			
	16.5	3042	1.7	54.55	37.0	45.0	38.0	30.0			
	20.0	2510	2.0	45.00	38.0	45.0	38.0	29.0			
	22.6	2216	2.3	39.74	26.0	45.0	38.0	28.0			
	24.9	2020	2.5	36.21	26.0	45.0	38.0	27.0			
	28.7	1747	2.9	31.33	26.0	45.0	38.0	25.0			
	8.3	5975	0.8	169.43	16.0	45.0	38.0	34.0	PKD 5390 132S4A / 132S4B	234	246-247
	11.7	4232	1.1	120.01	30.0	45.0	38.0	33.0			
	13.7	3615	1.3	102.50	32.0	45.0	38.0	33.0			
	15.9	3108	1.5	88.12	34.0	45.0	38.0	32.0			
	19.4	2546	1.9	72.18	36.0	45.0	38.0	31.0			
	22.4	2202	2.2	62.45	37.0	45.0	38.0	31.0			
	25.7	1924	2.5	54.55	37.0	45.0	38.0	30.0			
	31.1	1587	3.0	45.00	38.0	45.0	38.0	29.0			
	14.1	3344	1.1	198.37	16.0	45.0	38.0	39.0	PKD 5390 132S2B / 132S2C	234	246-247
	16.5	2856	1.3	169.43	16.0	45.0	38.0	34.0			
	23.3	2023	1.8	120.01	30.0	45.0	45.0	38.0			
	27.3	1728	2.1	102.50	32.0	45.0	38.0	33.0			
	31.8	1485	2.5	88.12	34.0	45.0	38.0	32.0			
	38.8	1217	3.0	72.18	36.0	45.0	38.0	31.0			
	13.1	3822	0.8	68.52	23.0	40.0	28.0	16.0	PKD 4390 132M6B	159	238-239
	14.2	3525	0.8	63.21	24.0	40.0	28.0	16.0			
	16.2	3105	0.9	55.67	25.0	40.0	28.0	16.0			
	18.9	2655	1.1	47.61	26.0	40.0	28.0	16.0			
	22.2	2262	1.3	40.56	27.0	40.0	28.0	16.0			
	26.2	1918	1.5	34.38	27.0	40.0	28.0	16.0			
	32.2	1558	1.9	27.93	28.0	40.0	28.0	15.0			
	37.7	1332	2.1	23.88	17.0	40.0	28.0	15.0			
	44.2	1135	2.4	20.35	17.0	40.0	28.0	15.0			
	49.3	1018	2.5	18.25	17.0	40.0	28.0	13.0			
	57.4	875	2.4	15.69	17.0	40.0	28.0	13.0			
	67.1	748	2.8	13.42	17.0	40.0	28.0	13.0			
	78.7	637	2.5	11.43	17.0	40.0	28.0	12.0			
	87.8	572	2.8	10.25	17.0	40.0	28.0	12.0			
	95.5	525	3.0	9.42	17.0	40.0	28.0	12.0			
	101.9	492	3.0	8.83	17.0	40.0	28.0	12.0			
	14.6	3370	0.8	95.57	17.0	40.0	28.0	15.0	PKD 4390 132S4A / 132S4B	159	238-239
	16.2	3051	0.9	86.50	20.0	40.0	28.0	15.0			
	18.4	2683	1.0	76.08	22.0	40.0	28.0	15.0			
	20.4	2416	1.2	68.52	23.0	40.0	28.0	16.0			
	22.1	2229	1.3	63.21	24.0	40.0	28.0	16.0			
	25.1	1963	1.4	55.67	25.0	40.0	28.0	16.0			
	29.4	1679	1.7	47.61	26.0	40.0	28.0	16.0			
	34.5	1430	2.0	40.56	27.0	40.0	28.0	16.0			
	40.7	1212	2.3	34.38	27.0	40.0	28.0	16.0			
	50.1	985	2.8	27.93	28.0	39.0	28.0	15.0			
	17.5	2696	0.8	159.93	17.0	40.0	28.0	20.0	PKD 4390 132S2B / 132S2C	159	238-239
	21.1	2240	1.0	132.86	17.0	40.0	28.0	17.0			
	29.3	1611	1.3	95.57	17.0	40.0	28.0	15.0			
	32.4	1458	1.5	86.50	20.0	40.0	28.0	15.0			
	36.8	1283	1.7	76.08	22.0	40.0	28.0	15.0			
	40.9	1155	1.8	68.52	23.0	40.0	28.0	16.0			
	44.3	1066	2.0	63.21	24.0	40.0	28.0	16.0			
	50.3	938	2.3	55.67	25.0	40.0	28.0	16.0			
	58.8	803	2.7	47.61	26.0	40.0	28.0	16.0			

P_1 [kW]	n_2 [Min^{-1}]	M_2 [Nm]	f_B	i_{ges}	F_R [N]	F_A [N]	$F_{R\,GR}$ [N]	$F_{A\,GR}$ [N]	Tip / Type / Typ IE2 / IE3	Kg	mm
5.50	30.3	1655	1.0	29.67	6.0	10.0	15.0	8.0	PKD 3390 132M6B	112	230-231
	35.9	1398	1.1	25.06	7.0	10.0	15.0	8.0			
	37.6	1334	1.2	23.92	7.0	10.0	15.0	8.0			
	44.4	1129	1.4	20.25	7.0	10.0	15.0	8.0			
	52.6	954	1.6	17.10	7.0	10.0	15.0	8.0			
	57.2	877	1.7	15.73	7.0	10.0	15.0	8.0			
	66.5	755	1.9	13.54	7.0	10.0	15.0	8.0			
	71.0	707	1.5	12.68	6.0	9.0	15.0	8.0			
	83.8	599	1.6	10.74	6.0	9.0	15.0	7.0			
	105.9	474	1.9	8.50	6.0	9.0	15.0	7.0			
	28.0	1761	0.9	49.94	1.0	7.0	14.0	7.0	PKD 3390 132S4A / 132S4B	112	230-231
	29.4	1681	0.9	47.67	4.0	8.0	15.0	7.0			
	34.7	1424	1.1	40.37	6.0	9.0	15.0	8.0			
	47.2	1046	1.4	29.67	6.0	10.0	15.0	8.0			
	55.9	884	1.7	25.06	7.0	10.0	15.0	8.0			
	58.5	844	1.8	23.92	7.0	10.0	15.0	8.0			
	69.1	714	2.1	20.25	7.0	10.0	15.0	8.0			
	81.9	603	2.4	17.10	7.0	10.0	15.0	8.0			
	89.0	555	2.5	15.73	7.0	10.0	15.0	8.0			
	103.4	478	2.8	13.54	7.0	10.0	15.0	8.0			
	110.4	447	2.2	12.68	6.0	9.0	15.0	8.0			
	130.4	379	2.4	10.74	6.0	9.0	15.0	7.0			
	164.7	300	2.9	8.50	6.0	9.0	15.0	7.0			
	47.3	997	1.2	59.15	1.0	7.0	15.0	9.0	PKD 3390 132S2B / 132S2C	112	230-231
	56.1	842	1.4	49.94	1.0	7.0	14.0	7.0			
	58.7	804	1.5	47.67	4.0	8.0	15.0	7.0			
	69.4	681	1.7	40.37	6.0	9.0	15.0	8.0			
	94.4	500	2.3	29.67	6.0	10.0	15.0	8.0			
	111.7	422	2.7	25.06	7.0	10.0	15.0	8.0			
	117.1	403	2.9	23.92	7.0	10.0	15.0	8.0			
	72.6	702	0.8	12.40	6.1	10.2	-	-	PKD H 5290 132M6B	93	202-203
	82.9	614	0.9	10.85	6.0	9.9	-	-			
	93.4	546	1.0	9.64	5.9	9.7	-	-			
	105.1	485	1.1	8.56	5.8	9.4	-	-			
	118.6	430	1.2	7.59	5.7	9.2	-	-			
	140.2	364	1.3	6.42	5.6	8.8	-	-			
	147.3	346	1.3	6.11	5.5	8.6	-	-			
	165.7	307	1.5	5.43	5.4	8.3	-	-			
	187.5	272	1.6	4.80	5.3	8.0	-	-			
	63.1	800	0.8	22.20	3.0	10.7	-	-	PKD H 5290 132S4A / 132S4B	93	202-203
	71.0	711	0.8	19.73	3.6	10.8	-	-			
	78.5	643	0.9	17.84	4.8	10.6	-	-			
	89.7	562	1.0	15.61	5.8	10.5	-	-			
	100.9	500	1.1	13.88	6.1	10.3	-	-			
	112.9	447	1.2	12.40	6.1	10.2	-	-			
	129.0	391	1.3	10.85	6.0	9.9	-	-			
	145.2	347	1.4	9.64	5.9	9.7	-	-			
	163.6	308	1.6	8.56	5.8	9.4	-	-			
	184.5	273	1.7	7.59	5.7	9.2	-	-			
	218.1	231	1.9	6.42	5.6	8.8	-	-			
	229.1	220	1.9	6.11	5.5	8.6	-	-			
	257.8	196	2.2	5.43	5.4	8.3	-	-			
	291.7	173	2.4	4.80	5.3	8.0	-	-			
	110.4	443	1.1	25.37	3.0	10.7	-	-	PKD H 5290 132S2B / 132S2C	93	202-203
	126.1	388	1.2	22.20	3.0	10.7	-	-			
	141.9	345	1.3	19.73	3.6	10.8	-	-			
	157.0	312	1.4	17.84	4.8	10.6	-	-			
	179.4	273	1.6	15.61	5.8	10.5	-	-			
	201.7	242	1.7	13.88	6.1	10.3	-	-			
	225.8	217	1.8	12.40	6.1	10.2	-	-			
	258.1	190	2.1	10.85	6.0	9.9	-	-			
	290.5	168	2.2	9.64	5.9	9.7	-	-			
	327.1	150	2.5	8.56	5.8	9.4	-	-			
	368.9	133	2.7	7.59	5.7	9.2	-	-			
	436.1	112	3.0	6.42	5.6	8.8	-	-			
	458.3	107	3.0	6.11	5.5	8.6	-	-			

P_1 [kW]	n_2 [Min^{-1}]	M_2 [Nm]	f_B	i_{ges}	F_R [N]	F_A [N]	$F_{R\,GR}$ [N]	$F_{A\,GR}$ [N]	Tip / Type / Typ IE2 / IE3	Kg	mm
5.50	132.4	385	0.8	6.80	5.4	8.4	-	-	PKD F 4290 132M6B	81	198-199
	152.0	335	0.9	5.92	5.3	8.1	-	-			
	165.1	309	0.9	5.45	5.3	8.0	-	-			
	185.6	275	1.0	4.85	5.2	7.7	-	-			
	127.5	395	0.8	10.98	3.7	9.2	-	-	PKD F 4290 132S4A / 132S4B	81	198-199
	143.4	352	0.9	9.76	4.4	9.0	-	-			
	161.5	312	1.0	8.67	4.8	8.8	-	-			
	181.6	278	1.1	7.71	5.1	8.6	-	-			
	205.9	245	1.2	6.80	5.4	8.4	-	-			
	236.5	213	1.3	5.92	5.3	8.1	-	-			
	256.9	196	1.4	5.45	5.3	8.0	-	-			
	288.7	175	1.5	4.85	5.2	7.7	-	-			
	154.8	316	0.8	18.09	3.7	9.2	-	-	PKD F 4290 132S2B / 132S2C	81	198-199
	174.1	281	1.0	16.08	3.7	9.2	-	-			
	199.0	246	1.1	14.07	3.7	9.2	-	-			
	221.7	221	1.2	12.63	3.7	9.2	-	-			
	255.0	192	1.3	10.98	3.7	9.2	-	-			
	286.9	170	1.4	9.76	4.4	9.0	-	-			
	323.0	151	1.6	8.67	4.8	8.8	-	-			
	363.2	135	1.7	7.71	5.1	8.6	-	-			
	411.8	119	1.9	6.80	5.4	8.4	-	-			
	473.0	103	2.1	5.92	5.3	8.1	-	-			
	513.8	95	2.1	5.45	5.3	8.0	-	-			
	577.3	85	2.4	4.85	5.2	7.7	-	-			
7.50	1.2	47848	0.8	2316.27	-	-	-	-	PKD G 9390/63 132S2C / 132S2D	1828	282
	1.4	42391	0.9	2052.10	-	-	-	-			
	1.6	36650	1.0	1774.21	-	-	-	-			
	1.1	60256	0.9	816.57	-	-	-	-	PKD G 9390/62 160M6B / 160M6C	1866	282
	1.3	51860	1.0	702.80	-	-	-	-			
	1.5	44838	1.2	607.63	-	-	-	-			
	1.7	39724	1.3	538.33	-	-	-	-			
	1.9	34993	1.5	474.22	-	-	-	-			
	2.1	31804	1.7	431.00	-	-	-	-			
	2.4	27373	1.9	370.95	-	-	-	-			
	2.8	23666	2.2	320.72	-	-	-	-			
	3.0	21928	2.4	297.17	-	-	-	-			
	3.3	19930	2.6	270.09	-	-	-	-			
	3.9	17231	3.0	233.51	-	-	-	-			
	1.0	62338	0.8	1353.86	-	-	-	-	PKD G 9390/62 132M4C / 132M4D	1830	282
	1.2	53652	0.9	1165.22	-	-	-	-			
	1.4	45092	1.1	979.31	-	-	-	-			
	1.7	37599	1.3	816.57	-	-	-	-			
	2.0	32360	1.5	702.80	-	-	-	-			
	2.3	27978	1.8	607.63	-	-	-	-			
	2.6	24787	2.0	538.33	-	-	-	-			
	3.0	21835	2.3	474.22	-	-	-	-			
	3.2	19845	2.5	431.00	-	-	-	-			
	3.8	17080	2.9	370.95	-	-	-	-			
	1.7	34757	1.1	1623.67	-	-	-	-	PKD G 9390/62 132S2C / 132S2D	1830	282
	2.1	28981	1.3	1353.86	-	-	-	-			
	2.4	24943	1.5	1165.22	-	-	-	-			
	2.9	20963	1.8	979.31	-	-	-	-			
	3.4	17480	2.2	816.57	-	-	-	-			
	4.0	15044	2.5	702.80	-	-	-	-			
	4.6	13007	2.9	607.63	-	-	-	-			
	2.0	32782	1.0	444.25	143.0	70.0	160.0	70.0	PKD 9390/52 160M6B / 160M6C	1566	280
	2.3	28500	1.2	386.23	146.0	70.0	160.0	70.0			
	3.2	20765	1.6	281.40	152.0	70.0	160.0	70.0			
	4.0	16467	2.0	223.16	93.0	70.0	160.0	70.0			
	4.7	14152	2.4	191.78	93.0	70.0	160.0	70.0			
	1.7	38954	0.8	846.00	85.0	70.0	160.0	70.0	PKD 9390/52 132M4C / 132M4D	1530	280
	2.0	32532	1.0	706.54	110.0	70.0	160.0	70.0			
	2.3	28076	1.1	609.75	127.0	70.0	160.0	70.0			
	3.2	20455	1.6	444.25	143.0	70.0	160.0	70.0			
	3.6	17784	1.8	386.23	146.0	70.0	160.0	70.0			
	5.0	12957	2.5	281.40	152.0	70.0	160.0	70.0			

P_1 [kW]	n_2 [Min^{-1}]	M_2 [Nm]	f_B	i_{ges}	F_R [N]	F_A [N]	$F_{R\,GR}$ [N]	$F_{A\,GR}$ [N]	Tip / Type / Typ IE2 / IE3	Kg	mm
7.50	2.0 2.5 3.3 4.0 4.6 6.3 7.2	30495 23961 18110 15124 13053 9510 8268	0.8 1.0 1.3 1.6 1.9 2.6 2.9	1424.59 1119.32 846.00 706.54 609.75 444.25 386.23	85.0 85.0 85.0 110.0 127.0 143.0 146.0	70.0 70.0 70.0 70.0 70.0 70.0 70.0	160.0 160.0 160.0 160.0 160.0 160.0 160.0	70.0 70.0 70.0 70.0 70.0 70.0 70.0	PKD 9390/52 132S2C / 132S2D	1530	280
	3.0 3.6 4.6 5.9	22649 19262 15030 11645	1.5 1.7 2.2 2.9	297.79 253.26 197.62 153.11	143.0 148.0 143.0 143.0	70.0 70.0 70.0 70.0	160.0 160.0 160.0 160.0	70.0 70.0 70.0 70.0	PKD 9390 160M6B / 160M6C	1490	270-271
	4.7 5.5	14321 12180	2.2 2.6	297.79 253.26	143.0 148.0	70.0 70.0	- -	- -	PKD 9390 132M4C / 132M4D	1454	270-271
	3.3 3.8 5.2 6.2	20060 17440 12706 10689	1.0 1.2 1.7 1.8	271.85 236.35 172.19 144.85	112.0 115.0 119.0 120.0	65.0 65.0 65.0 65.0	120.0 120.0 120.0 120.0	65.0 65.0 65.0 65.0	PKD G 8390/52 160M6B / 160M6C	996	280
	3.2 3.7 5.1 5.9 8.1 9.7	20028 17473 12517 10883 7928 6670	0.9 1.0 1.4 1.7 2.3 2.7	434.96 379.47 271.85 236.35 172.19 144.85	91.0 100.0 112.0 115.0 119.0 120.0	65.0 65.0 65.0 65.0 65.0 65.0	120.0 120.0 120.0 120.0 120.0 120.0	65.0 65.0 65.0 65.0 65.0 65.0	PKD G 8390/52 132M4C / 132M4D	960	280
	3.1 3.9 4.5 6.4 7.4 10.3 11.8	19476 15302 13350 9311 8123 5819 5059	0.8 1.0 1.1 1.6 1.9 2.6 3.0	909.80 714.84 623.65 434.96 379.47 271.85 236.35	91.0 91.0 91.0 91.0 100.0 112.0 115.0	65.0 65.0 65.0 65.0 65.0 65.0 65.0	120.0 120.0 120.0 120.0 120.0 120.0 120.0	65.0 65.0 65.0 65.0 65.0 65.0 65.0	PKD G 8390/52 132S2C / 132S2D	960	280
	3.7 4.9 6.1 7.3	18186 13454 10799 9124	0.8 1.0 1.3 1.4	246.45 182.32 146.35 123.64	94.0 95.0 95.0 79.0	60.0 60.0 60.0 60.0	95.0 95.0 95.0 95.0	60.0 60.0 60.0 60.0	PKD 8390/52 160M6B / 160M6C	746	280
	5.7 7.7 9.6 11.3	11348 8395 6739 5693	1.1 1.5 1.9 2.1	246.45 182.32 146.35 123.64	94.0 - 95.0 79.0	60.0 - 60.0 60.0	95.0 95.0 95.0 95.0	60.0 60.0 60.0 60.0	PKD 8390/52 132M4C / 132M4D	710	280
	11.4 15.4	5276 3903	1.9 2.5	246.45 182.32	94.0 95.0	60.0 60.0	95.0 95.0	60.0 60.0	PKD 8390/52 132S2C / 132S2D	710	280
	4.9	13170	1.0	286.02	71.0	60.0	95.0	60.0	PKD 8390/42 132M4C / 132M4D	685	280
	4.6 6.3 7.4 9.8	12906 9512 8134 6123	0.8 1.0 1.2 1.6	602.92 444.35 379.99 286.02	71.0 71.0 71.0 71.0	60.0 60.0 60.0 60.0	95.0 95.0 95.0 95.0	60.0 60.0 60.0 60.0	PKD 8390/42 132S2C / 132S2D	685	280
	3.9 4.6 5.9 7.0 7.7 9.9	17544 14758 11551 9716 8870 6893	1.2 1.4 1.8 2.2 2.4 3.0	230.68 194.04 151.87 127.75 116.62 90.63	115.0 117.0 119.0 119.0 119.0 119.0	65.0 65.0 65.0 65.0 65.0 65.0	120.0 120.0 120.0 120.0 120.0 120.0	65.0 65.0 65.0 65.0 65.0 65.0	PKD G 8390 160M6B / 160M6C	920	266-267
	6.1 7.2	11094 9332	1.8 2.1	230.68 194.04	115.0 117.0	65.0 65.0	120.0 120.0	65.0 65.0	PKD G 8390 132M4C / 132M4D	884	266-267
	12.1	5503	2.9	230.68	115.0	65.0	120.0	65.0	PKD G 8390 132S2C / 132S2D	884	266-267

P_1 [kW]	n_2 [Min^{-1}]	M_2 [Nm]	f_B	i_{ges}	F_R [N]	F_A [N]	$F_{R\,GR}$ [N]	$F_{A\,GR}$ [N]	Tip / Type / Typ IE2 / IE3	Kg	mm
7.50	6.0	11320	1.2	148.84	93.0	60.0	95.0	60.0	PKD 8390 160M6B / 160M6C	670	262-263
	7.3	9320	1.5	122.54	91.0	60.0	95.0	60.0			
	7.7	8864	1.5	116.55	94.0	60.0	95.0	60.0			
	9.4	7298	1.9	95.96	95.0	60.0	95.0	60.0			
	10.8	6309	2.2	82.95	88.0	60.0	95.0	60.0			
	12.6	5443	2.5	71.56	88.0	60.0	95.0	60.0			
	14.4	4748	2.9	62.43	88.0	60.0	95.0	60.0			
	4.7	14268	0.9	296.68	79.0	60.0	95.0	60.0	PKD 8390 132M4C / 132M4D	634	262-263
	5.7	11746	1.1	244.25	85.0	60.0	95.0	60.0			
	9.4	7158	1.8	148.84	93.0	60.0	95.0	60.0			
	11.4	5893	2.2	122.54	91.0	60.0	-	-			
	12.0	5605	2.3	116.55	94.0	60.0	95.0	60.0			
	14.6	4615	2.8	95.96	95.0	60.0	95.0	60.0			
	9.4	6820	1.4	296.68	79.0	60.0	95.0	60.0	PKD 8390 132S2C / 132S2D	634	262-263
	11.5	5615	1.8	244.25	85.0	60.0	95.0	60.0			
	18.8	3421	2.9	148.84	93.0	60.0	95.0	60.0			
	7.1	9039	0.8	196.30	47.0	50.0	66.0	39.0	PKD 7390/42 132M4C / 132M4D	425	278
	8.9	7231	0.9	157.05	54.0	50.0	66.0	39.0			
	10.4	6184	1.0	134.31	58.0	50.0	66.0	39.0			
	10.4	5768	1.1	269.43	47.0	50.0	66.0	45.0	PKD 7390/42 132S2C / 132S2D	425	278
	14.3	4202	1.3	196.30	47.0	50.0	66.0	39.0			
	17.8	3362	1.4	157.05	54.0	50.0	66.0	39.0			
	20.8	2875	1.6	134.31	58.0	50.0	66.0	39.0			
	7.3	8236	0.8	384.74	37.0	50.0	66.0	50.0	PKD 7390/32 132S2C / 132S2D	408	278
	9.0	6638	1.0	310.09	37.0	50.0	66.0	48.0			
	8.2	8374	1.1	110.10	60.0	50.0	66.0	41.0	PKD 7390 160M6B / 160M6C	410	258-259
	9.8	6955	1.3	91.45	62.0	50.0	66.0	40.0			
	11.3	6055	1.5	79.61	63.0	50.0	66.0	39.0			
	12.8	5330	1.7	70.08	64.0	50.0	66.0	38.0			
	15.4	4445	2.0	58.44	64.0	50.0	66.0	37.0			
	17.9	3825	2.3	50.29	50.0	50.0	66.0	39.0			
	21.9	3121	2.6	41.04	50.0	50.0	66.0	33.0			
	6.8	9954	0.9	206.98	55.0	50.0	66.0	47.0	PKD 7390 132M4C / 132M4D	374	258-259
	7.5	8982	0.9	186.78	49.0	50.0	66.0	42.0			
	8.9	7571	1.1	157.44	54.0	50.0	66.0	42.0			
	10.2	6572	1.0	136.65	61.0	50.0	66.0	41.0			
	12.7	5295	1.6	110.10	60.0	50.0	66.0	40.0			
	15.3	4398	1.9	91.45	62.0	50.0	66.0	39.0			
	17.6	3829	2.2	79.61	63.0	50.0	66.0	38.0			
	20.0	3370	2.5	70.08	64.0	50.0	66.0	37.0			
	24.0	2810	3.0	58.44	64.0	50.0	66.0	36.0			
	11.4	5645	1.1	245.55	50.0	50.0	66.0	48.0	PKD 7390 132S2C / 132S2D	374	258-259
	13.5	4758	1.4	206.98	55.0	50.0	66.0	47.0			
	15.0	4294	1.5	186.78	49.0	50.0	66.0	42.0			
	17.8	3619	1.8	157.44	54.0	50.0	66.0	42.0			
	20.5	3141	1.6	136.65	61.0	50.0	66.0	44.0			
	25.4	2531	2.6	110.10	60.0	50.0	66.0	41.0			
	7.4	8667	0.8	188.23	49.0	50.0	66.0	45.0	PKD 6390/42 132M4C / 132M4D	425	278
	9.3	6934	0.9	150.60	63.0	50.0	66.0	50.0			
	10.9	5930	1.0	128.79	58.0	50.0	66.0	44.0			
	10.8	5531	1.1	258.36	49.0	50.0	66.0	50.0	PKD 6390/42 132S2C / 132S2D	425	278
	14.9	4029	1.4	188.23	49.0	50.0	66.0	45.0			
	18.6	3224	1.5	150.60	63.0	50.0	66.0	50.0			
	21.7	2757	1.7	128.79	58.0	50.0	66.0	44.0			
	7.6	7897	0.8	368.93	42.0	45.0	66.0	50.0	PKD 6390/32 132S2C / 132S2D	408	278
	9.4	6365	1.0	297.35	42.0	45.0	66.0	50.0			

P_1 [kW]	n_2 [Min^{-1}]	M_2 [Nm]	f_B	i_{ges}	F_R [N]	F_A [N]	$F_{R\,GR}$ [N]	$F_{A\,GR}$ [N]	Tip / Type / Typ IE2 / IE3	Kg	mm
7.50	6.0	11468	0.8	150.79	55.0	50.0	66.0	47.0	PKD 6390 160M6B / 160M6C	410	254-255
	10.3	6670	1.3	87.70	62.0	50.0	66.0	44.0			
	11.8	5805	1.5	76.33	63.0	50.0	66.0	43.0			
	13.4	5111	1.7	67.20	63.0	50.0	66.0	42.0			
	16.1	4261	2.0	56.03	64.0	50.0	66.0	41.0			
	18.7	3668	2.3	48.23	52.0	50.0	66.0	39.0			
	22.9	2993	2.6	39.35	52.0	50.0	66.0	36.0			
	7.1	9533	0.9	198.23	56.0	50.0	66.0	50.0	PKD 6390 132M4C / 132M4D	374	254-255
	7.8	8614	1.0	179.11	51.0	50.0	66.0	48.0			
	9.3	7252	1.1	150.79	55.0	50.0	66.0	47.0			
	10.8	6221	1.1	129.36	61.0	50.0	66.0	50.0			
	13.3	5077	1.6	105.58	61.0	50.0	66.0	45.0			
	16.0	4218	1.9	87.70	62.0	50.0	66.0	44.0			
	18.3	3671	2.2	76.33	63.0	50.0	66.0	43.0			
	20.8	3232	2.5	67.20	63.0	50.0	66.0	42.0			
	25.0	2695	3.0	56.03	64.0	50.0	66.0	41.0			
	11.9	5412	1.2	235.45	56.0	50.0	66.0	50.0	PKD 6390 132S2C / 132S2D	374	254-255
	14.1	4557	1.4	198.23	56.0	50.0	66.0	50.0			
	15.6	4117	1.5	179.11	51.0	50.0	66.0	48.0			
	18.6	3466	1.8	150.79	55.0	50.0	66.0	47.0			
	21.6	2974	1.7	129.36	61.0	50.0	66.0	50.0			
	26.5	2427	2.6	105.58	61.0	50.0	66.0	45.0			
	10.2	6702	0.8	88.12	29.0	45.0	38.0	30.0	PKD 5390 160M6B / 160M6C	270	246-247
	12.5	5490	0.9	72.18	33.0	45.0	38.0	29.0			
	14.4	4750	1.1	62.45	34.0	45.0	38.0	29.0			
	16.5	4149	1.2	54.55	35.0	45.0	38.0	28.0			
	20.0	3422	1.5	45.00	37.0	45.0	38.0	27.0			
	22.6	3022	1.7	39.74	37.0	45.0	38.0	27.0			
	24.9	2754	1.8	36.21	37.0	45.0	38.0	26.0			
	28.7	2383	2.1	31.33	16.0	45.0	38.0	25.0			
	32.9	2082	2.3	27.37	16.0	45.0	38.0	24.0			
	38.5	1778	2.5	23.38	16.0	45.0	38.0	23.0			
	39.9	1717	2.6	22.58	16.0	45.0	38.0	23.0			
	45.1	1517	3.0	19.94	16.0	45.0	38.0	22.0			
	11.7	5771	0.8	120.01	19.0	45.0	38.0	30.0	PKD 5390 132M4C / 132M4D	234	246-247
	13.7	4929	1.0	102.50	26.0	45.0	38.0	30.0			
	15.9	4238	1.1	88.12	29.0	45.0	38.0	30.0			
	19.4	3471	1.4	72.18	33.0	45.0	38.0	29.0			
	22.4	3003	1.6	62.45	34.0	45.0	38.0	29.0			
	25.7	2623	1.8	54.55	35.0	45.0	38.0	28.0			
	31.1	2164	2.2	45.00	37.0	45.0	38.0	27.0			
	35.2	1911	2.5	39.74	37.0	45.0	38.0	27.0			
	38.7	1741	2.8	36.21	37.0	45.0	38.0	26.0			
	14.1	4560	0.8	198.37	19.0	45.0	38.0	39.0	PKD 5390 132S2C / 132S2D	234	246-247
	16.5	3895	0.9	169.43	19.0	45.0	38.0	34.0			
	23.3	2759	1.3	120.01	19.0	45.0	38.0	30.0			
	27.3	2356	1.5	102.50	26.0	45.0	38.0	30.0			
	31.8	2026	1.8	88.12	29.0	45.0	38.0	30.0			
	38.8	1659	2.2	72.18	33.0	45.0	38.0	29.0			
	44.8	1436	2.5	62.45	34.0	45.0	38.0	29.0			
	51.3	1254	2.9	54.55	35.0	45.0	38.0	28.0			
	18.9	3621	0.8	47.61	24.0	39.0	28.0	14.0	PKD 4390 160M6B / 160M6C	195	238-239
	22.2	3085	1.0	40.56	25.0	38.0	28.0	14.0			
	26.2	2615	1.1	34.38	26.0	38.0	28.0	14.0			
	32.2	2124	1.4	27.93	27.0	37.0	28.0	14.0			
	37.7	1816	1.6	23.88	27.0	36.0	28.0	14.0			
	44.2	1548	1.8	20.35	26.0	35.0	28.0	14.0			
	49.3	1388	1.9	18.25	26.0	35.0	28.0	13.0			
	57.4	1193	1.8	15.69	25.0	33.0	28.0	13.0			
	67.1	1021	2.1	13.42	23.0	31.0	28.0	13.0			
	78.7	869	1.8	11.43	23.0	31.0	28.0	12.0			
	87.8	780	2.0	10.25	22.0	30.0	28.0	12.0			
	95.5	716	2.2	9.42	17.0	40.0	28.0	12.0			
	101.9	672	2.2	8.83	17.0	40.0	28.0	12.0			

P_1 [kW]	n_2 [Min^{-1}]	M_2 [Nm]	f_B	i_{ges}	F_R [N]	F_A [N]	$F_{R\,GR}$ [N]	$F_{A\,GR}$ [N]	Tip / Type / Typ IE2 / IE3	Kg	mm
7.50	18.4	3659	0.8	76.08	22.0	40.0	28.0	15.0	PKD 4390 132M4C / 132M4D	159	238-239
	20.4	3295	0.8	68.52	18.0	38.0	28.0	12.0			
	22.1	3040	0.9	63.21	20.0	38.0	28.0	12.0			
	25.1	2677	1.0	55.67	22.0	39.0	28.0	13.0			
	29.4	2290	1.2	47.61	24.0	39.0	28.0	14.0			
	34.5	1951	1.4	40.56	25.0	38.0	28.0	14.0			
	40.7	1653	1.7	34.38	26.0	38.0	28.0	14.0			
	50.1	1343	2.1	27.93	27.0	37.0	28.0	14.0			
	58.6	1148	2.4	23.88	27.0	36.0	28.0	14.0			
	68.8	979	2.7	20.35	26.0	35.0	28.0	14.0			
	76.7	878	2.8	18.25	26.0	35.0	28.0	13.0			
	89.2	755	2.7	15.69	25.0	33.0	28.0	13.0			
	122.5	550	2.7	11.43	23.0	31.0	28.0	12.0			
	136.6	493	3.0	10.25	22.0	30.0	28.0	12.0			
	29.3	2197	1.0	95.57	22.0	40.0	28.0	15.0	PKD 4390 132S2C / 132S2D	159	238-239
	32.4	1988	1.1	86.50	22.0	40.0	28.0	15.0			
	36.8	1749	1.2	76.08	22.0	40.0	28.0	15.0			
	40.9	1575	1.4	68.52	18.0	38.0	28.0	12.0			
	44.3	1453	1.5	63.21	20.0	38.0	28.0	12.0			
	50.3	1280	1.7	55.67	22.0	39.0	28.0	13.0			
	58.8	1094	1.9	47.61	24.0	39.0	28.0	14.0			
	69.0	932	2.3	40.56	25.0	38.0	28.0	14.0			
	81.4	790	2.7	34.38	26.0	38.0	28.0	14.0			
	34.7	1941	0.8	40.37	1.0	4.0	13.0	5.0	PKD 3390 132M4C / 132M4D	112	230-231
	47.2	1427	1.1	29.67	4.0	6.0	15.0	6.0			
	55.9	1205	1.2	25.06	5.0	7.0	15.0	7.0			
	58.5	1150	1.3	23.92	5.0	7.0	15.0	7.0			
	69.1	974	1.5	20.25	5.0	8.0	15.0	7.0			
	81.9	822	1.8	17.10	6.0	8.0	15.0	7.0			
	89.0	756	1.9	15.73	6.0	8.0	15.0	7.0			
	103.4	651	2.1	13.54	6.0	8.0	15.0	7.0			
	110.4	610	1.6	12.68	5.0	8.0	15.0	7.0			
	130.4	516	1.7	10.74	5.0	8.0	15.0	7.0			
	164.7	409	2.2	8.50	5.0	8.0	15.0	7.0			
	47.3	1360	0.9	59.15	1.0	4.0	15.0	9.0	PKD 3390 132S2C / 132S2D	112	230-231
	56.1	1148	1.0	49.94	1.0	4.0	14.0	7.0			
	58.7	1096	1.1	47.67	1.0	4.0	15.0	7.0			
	69.4	928	1.3	40.37	1.0	4.0	13.0	5.0			
	94.4	682	1.7	29.67	4.0	6.0	15.0	6.0			
	111.7	576	2.0	25.06	5.0	7.0	15.0	7.0			
	117.1	550	2.1	23.92	5.0	7.0	15.0	7.0			
	138.3	465	2.4	20.25	5.0	8.0	15.0	7.0			
	163.7	393	2.8	17.10	6.0	8.0	15.0	7.0			
	178.0	362	2.9	15.73	6.0	8.0	15.0	7.0			
	220.8	291	2.6	12.68	5.0	8.0	15.0	7.0			
	260.7	247	2.8	10.74	5.0	8.0	15.0	7.0			
	89.7	767	0.8	15.61	5.8	10.5	-	-	PKD H 5290 132M4C / 132M4D	93	202-203
	100.9	682	0.8	13.88	4.2	8.8	-	-			
	112.9	609	0.8	12.40	5.1	8.8	-	-			
	129.0	533	1.0	10.85	5.2	8.7	-	-			
	145.2	473	1.0	9.64	5.2	8.6	-	-			
	163.6	420	1.2	8.56	5.2	8.5	-	-			
	184.5	373	1.3	7.59	5.1	8.3	-	-			
	218.1	315	1.4	6.42	5.1	8.1	-	-			
	229.1	300	1.4	6.11	5.1	7.9	-	-			
	257.8	267	1.6	5.43	5.0	7.8	-	-			
	291.7	236	1.7	4.80	4.9	7.5	-	-			

P_1 [kW]	n_2 [Min^{-1}]	M_2 [Nm]	f_B	i_{ges}	F_R [N]	F_A [N]	$F_{R\,GR}$ [N]	$F_{A\,GR}$ [N]	Tip / Type / Typ IE2 / IE3	Kg	mm
7.50	110.4	604	0.8	25.37	5.8	10.5	-	-	PKD H 5290 132S2C / 132S2D	93	202-203
	126.1	529	0.9	22.20	5.8	10.5	-	-			
	141.9	470	1.0	19.73	5.8	10.5	-	-			
	157.0	425	1.0	17.84	5.8	10.5	-	-			
	179.4	372	1.2	15.61	5.8	10.5	-	-			
	201.7	331	1.2	13.88	4.2	8.8	-	-			
	225.8	295	1.3	12.40	5.1	8.8	-	-			
	258.1	258	1.5	10.85	5.2	8.7	-	-			
	290.5	230	1.6	9.64	5.2	8.6	-	-			
	327.1	204	1.8	8.56	5.2	8.5	-	-			
	368.9	181	2.0	7.59	5.1	8.3	-	-			
	436.1	153	2.2	6.42	5.1	8.1	-	-			
	458.3	146	2.2	6.11	5.1	7.9	-	-			
	515.7	129	2.5	5.43	5.0	7.8	-	-			
	583.3	114	2.7	4.80	4.9	7.5	-	-			
	161.5	426	0.8	8.67	4.8	8.8	-	-	PKD F 4290 132M4C / 132M4D	81	198-199
	181.6	379	0.8	7.71	4.0	7.6	-	-			
	205.9	334	0.9	6.80	4.6	7.5	-	-			
	236.5	291	1.0	5.92	4.8	7.3	-	-			
	256.9	268	1.0	5.45	4.8	7.3	-	-			
	288.7	238	1.1	4.85	4.7	7.1	-	-			
	199.0	335	0.8	14.07	4.8	8.8	-	-	PKD F 4290 132S2C / 132S2D	81	198-199
	221.7	301	0.9	12.63	4.8	8.8	-	-			
	255.0	262	1.0	10.98	4.8	8.8	-	-			
	286.9	232	1.0	9.76	4.8	8.8	-	-			
	323.0	207	1.2	8.67	4.8	8.8	-	-			
	363.2	184	1.3	7.71	4.0	7.6	-	-			
	411.8	162	1.4	6.80	4.6	7.5	-	-			
	473.0	141	1.5	5.92	4.8	7.3	-	-			
	513.8	130	1.6	5.45	4.8	7.3	-	-			
	577.3	116	1.7	4.85	4.7	7.1	-	-			
9.20	1.6	44957	0.8	1774.21	-	-	-	-	PKD G 9390/63 132M2	1828	282
	1.3	63615	0.8	702.80	-	-	-	-	PKD G 9390/62 160M6	1866	282
	1.5	55001	1.0	607.63	-	-	-	-			
	1.7	48728	1.1	538.33	-	-	-	-			
	1.9	42925	1.2	474.22	-	-	-	-			
	2.1	39013	1.3	431.00	-	-	-	-			
	2.4	33577	1.6	370.95	-	-	-	-			
	2.8	29031	1.8	320.72	-	-	-	-			
	3.0	26899	2.0	297.17	-	-	-	-			
	3.3	24448	2.1	270.09	-	-	-	-			
	3.9	21137	2.5	233.51	-	-	-	-			
	1.2	65813	0.8	1165.22	-	-	-	-	PKD G 9390/62 132M4	1830	282
	1.4	55313	0.9	979.31	-	-	-	-			
	1.7	46121	1.1	816.57	-	-	-	-			
	2.0	39695	1.3	702.80	-	-	-	-			
	2.3	34320	1.5	607.63	-	-	-	-			
	2.6	30406	1.6	538.33	-	-	-	-			
	3.0	26785	1.9	474.22	-	-	-	-			
	3.2	24343	2.1	431.00	-	-	-	-			
	3.8	20952	2.4	370.95	-	-	-	-			
	4.4	18115	2.8	320.72	-	-	-	-			
	4.7	16785	3.0	297.17	-	-	-	-			
	1.7	42635	0.9	1623.67	-	-	-	-	PKD G 9390/62 132M2	1830	282
	2.1	35550	1.1	1353.86	-	-	-	-			
	2.4	30597	1.2	1165.22	-	-	-	-			
	2.9	25715	1.5	979.31	-	-	-	-			
	3.4	21442	1.8	816.57	-	-	-	-			
	4.0	18454	2.1	702.80	-	-	-	-			
	4.6	15955	2.4	607.63	-	-	-	-			
	5.2	14136	2.7	538.33	-	-	-	-			

P_1 [kW]	n_2 [Min^{-1}]	M_2 [Nm]	f_B	i_{ges}	F_R [N]	F_A [N]	$F_{R\,GR}$ [N]	$F_{A\,GR}$ [N]	Tip / Type / Typ IE2 / IE3	Kg	mm
9.20	2.0	40212	0.8	444.25	134.0	70.0	160.0	70.0	PKD 9390/52 160M6	1566	280
	2.3	34960	1.0	386.23	141.0	70.0	160.0	70.0			
	3.2	25471	1.3	281.40	149.0	70.0	160.0	70.0			
	4.0	20200	1.7	223.16	85.0	70.0	160.0	70.0			
	4.7	17359	1.9	191.78	85.0	70.0	160.0	70.0			
	2.0	39906	0.8	706.54	86.0	70.0	160.0	70.0	PKD 9390/52 132M4	1530	280
	2.3	34440	0.9	609.75	108.0	70.0	160.0	70.0			
	3.2	25092	1.3	444.25	134.0	70.0	160.0	70.0			
	3.6	21815	1.5	386.23	141.0	70.0	160.0	70.0			
	5.0	15894	2.0	281.40	149.0	70.0	160.0	70.0			
	2.5	29392	0.8	1119.32	86.0	70.0	160.0	70.0	PKD 9390/52 132M2	1530	280
	3.3	22215	1.1	846.00	86.0	70.0	160.0	70.0			
	4.0	18553	1.3	706.54	86.0	70.0	160.0	70.0			
	4.6	16011	1.5	609.75	108.0	70.0	160.0	70.0			
	6.3	11665	2.1	444.25	134.0	70.0	160.0	70.0			
	7.2	10142	2.4	386.23	141.0	70.0	160.0	70.0			
	4.5	18712	2.8	200.57	220.0	100.0	-	-	PKD G 9390 160M6	1735	274-275
	3.0	27782	1.2	297.79	143.0	70.0	160.0	70.0	PKD 9390 160M6	1490	270-271
	3.6	23628	1.4	253.26	143.0	70.0	160.0	70.0			
	4.6	18437	1.8	197.62	143.0	70.0	160.0	70.0			
	5.9	14284	2.4	153.11	143.0	70.0	160.0	70.0			
	7.5	11218	3.0	120.24	143.0	70.0	160.0	70.0			
	4.7	17567	1.8	297.79	-	-	-	-	PKD 9390 132M4	1454	270-271
	5.5	14940	2.1	253.26	-	-	-	-			
	9.4	8397	2.9	297.79	143.0	70.0	160.0	70.0	PKD 9390 132M2	1454	270-271
	3.3	24607	0.9	271.85	106.0	65.0	120.0	65.0	PKD G 8390/52 160M6	996	280
	3.8	21394	1.0	236.35	110.0	65.0	120.0	65.0			
	5.2	15586	1.3	172.19	116.0	65.0	120.0	65.0			
	6.2	13111	1.4	144.85	118.0	65.0	120.0	65.0			
	3.7	21433	0.8	379.47	86.0	65.0	120.0	65.0	PKD G 8390/52 132M4	960	280
	5.1	15354	1.2	271.85	106.0	65.0	120.0	65.0			
	5.9	13349	1.3	236.35	110.0	65.0	120.0	65.0			
	8.1	9726	1.9	172.19	116.0	65.0	120.0	65.0			
	9.7	8181	2.2	144.85	118.0	65.0	120.0	65.0			
	3.9	18771	0.8	714.84	86.0	65.0	120.0	65.0	PKD G 8390/52 132M2	960	280
	4.5	16376	0.9	623.65	86.0	65.0	120.0	65.0			
	6.4	11421	1.3	434.96	86.0	65.0	120.0	65.0			
	7.4	9964	1.5	379.47	86.0	65.0	120.0	65.0			
	10.3	7138	2.1	271.85	106.0	65.0	120.0	65.0			
	11.8	6206	2.4	236.35	110.0	65.0	120.0	65.0			
	4.9	16503	0.8	182.32	94.0	60.0	95.0	60.0	PKD 8390/52 160M6	746	280
	6.1	13247	1.0	146.35	94.0	60.0	-	-			
	7.3	11192	1.1	123.64	94.0	60.0	-	-			
	5.7	13920	0.9	246.45	-	-	-	-	PKD 8390/52 132M4	710	280
	7.7	10298	1.3	182.32	-	-	-	-			
	9.6	8266	1.6	146.35	-	-	-	-			
	11.3	6983	1.7	123.64	-	-	-	-			
	11.4	6471	1.5	246.45	94.0	60.0	-	-	PKD 8390/52 132M2	710	280
	15.4	4787	2.1	182.32	94.0	60.0	95.0	-			
	19.1	3843	2.6	146.35	94.0	60.0	-	-			
	22.6	3247	2.8	123.64	94.0	60.0	-	-			
	4.9	16155	0.8	286.02	71.0	60.0	95.0	60.0	PKD 8390/42 132M4	685	280
	6.3	11668	0.8	444.35	71.0	60.0	95.0	60.0	PKD 8390/42 132M2	685	280
	7.4	9978	1.0	379.99	71.0	60.0	95.0	60.0			
	9.8	7510	1.3	286.02	71.0	60.0	95.0	60.0			

P_1 [kW]	n_2 [Min^{-1}]	M_2 [Nm]	f_B	i_{ges}	F_R [N]	F_A [N]	$F_{R\,GR}$ [N]	$F_{A\,GR}$ [N]	Tip / Type / Typ IE2 / IE3	Kg	mm
9.20	3.9	21521	1.0	230.68	111.0	65.0	120.0	65.0	PKD G 8390 160M6	920	266-267
	4.6	18103	1.2	194.04	115.0	65.0	120.0	65.0			
	5.9	14169	1.5	151.87	120.0	65.0	120.0	65.0			
	7.0	11918	1.8	127.75	120.0	65.0	120.0	65.0			
	7.7	10880	1.9	116.62	120.0	65.0	120.0	65.0			
	9.9	8455	2.5	90.63	115.0	65.0	120.0	65.0			
	11.5	7309	2.9	78.34	115.0	65.0	120.0	65.0			
	6.1	13608	1.5	230.68	111.0	65.0	120.0	65.0	PKD G 8390 132M4	884	266-267
	7.2	11447	1.7	194.04	115.0	65.0	120.0	65.0			
	12.0	6880	2.9	116.62	120.0	65.0	120.0	65.0			
	12.1	6505	2.3	230.68	111.0	65.0	120.0	65.0	PKD G 8390 132M2	884	266-267
	14.4	5471	2.8	194.04	115.0	65.0	120.0	65.0			
	6.0	13886	1.0	148.84	91.0	60.0	95.0	60.0	PKD 8390 160M6	670	262-263
	7.3	11432	1.2	122.54	93.0	60.0	95.0	60.0			
	7.7	10874	1.3	116.55	93.0	60.0	95.0	60.0			
	9.4	8953	1.5	95.96	94.0	60.0	95.0	60.0			
	10.8	7739	1.8	82.95	95.0	60.0	95.0	60.0			
	12.6	6676	2.0	71.56	79.0	60.0	95.0	60.0			
	14.4	5824	2.3	62.43	79.0	60.0	95.0	60.0			
	16.9	4981	2.7	53.39	79.0	60.0	95.0	60.0			
	5.7	14409	0.9	244.25	79.0	60.0	95.0	60.0	PKD 8390 132M4	634	262-263
	9.4	8780	1.5	148.84	91.0	60.0	95.0	60.0			
	11.4	7229	1.8	122.54	-	-	-	-			
	12.0	6875	1.9	116.55	93.0	60.0	95.0	60.0			
	14.6	5661	2.3	95.96	94.0	60.0	95.0	60.0			
	16.9	4893	2.7	82.95	95.0	60.0	95.0	60.0			
	9.4	8366	1.1	296.68	79.0	60.0	95.0	60.0	PKD 8390 132M2	634	262-263
	11.5	6887	1.4	244.25	79.0	60.0	95.0	60.0			
	18.8	4197	2.4	148.84	91.0	60.0	95.0	60.0			
	22.8	3455	2.9	122.54	93.0	60.0	95.0	60.0			
	24.0	3286	3.0	116.55	93.0	60.0	95.0	60.0			
	10.4	7586	0.8	134.31	-	-	66.0	39.0	PKD 7390/42 132M4	425	278
	10.4	7075	0.9	269.43	47.0	50.0	66.0	45.0	PKD 7390/42 132M2	425	278
	14.3	5155	1.1	196.30	47.0	50.0	66.0	39.0			
	17.8	4124	1.2	157.05	47.0	50.0	66.0	39.0			
	20.8	3527	1.3	134.31	47.0	50.0	66.0	39.0			
	9.0	8142	0.8	310.09	37.0	50.0	66.0	48.0	PKD 7390/32 132M2	408	278
	8.2	10272	0.9	110.10	58.0	50.0	66.0	38.0	PKD 7390 160M6	410	258-259
	9.8	8532	1.0	91.45	60.0	50.0	66.0	38.0			
	11.3	7427	1.2	79.61	62.0	50.0	66.0	37.0			
	12.8	6538	1.4	70.08	63.0	50.0	66.0	37.0			
	15.4	5452	1.6	58.44	64.0	50.0	66.0	35.0			
	17.9	4692	1.8	50.29	64.0	50.0	66.0	35.0			
	21.9	3829	2.1	41.04	55.0	50.0	66.0	33.0			
	25.6	3280	2.7	35.16	55.0	50.0	66.0	31.0			
	7.5	11018	0.8	186.78	37.0	50.0	66.0	38.0	PKD 7390 132M4	374	258-259
	8.9	9288	0.9	157.44	48.0	50.0	66.0	38.0			
	10.2	8061	0.8	136.65	-	-	-	-			
	12.7	6495	1.3	110.10	58.0	50.0	66.0	38.0			
	15.3	5395	1.6	91.45	60.0	50.0	66.0	38.0			
	17.6	4696	1.8	79.61	62.0	50.0	66.0	37.0			
	20.0	4134	2.1	70.08	63.0	50.0	66.0	37.0			
	24.0	3447	2.5	58.44	64.0	50.0	66.0	35.0			
	27.8	2967	2.8	50.29	64.0	50.0	66.0	35.0			

P_1 [kW]	n_2 [Min^{-1}]	M_2 [Nm]	f_B	i_{ges}	F_R [N]	F_A [N]	$F_{R\,GR}$ [N]	$F_{A\,GR}$ [N]	Tip / Type / Typ IE2 / IE3	Kg	mm
9.20	11.4	6924	0.9	245.55	37.0	50.0	66.0	48.0	PKD 7390 132M2	374	258-259
	13.5	5836	1.1	206.98	37.0	50.0	66.0	47.0			
	15.0	5267	1.2	186.78	37.0	50.0	66.0	38.0			
	17.8	4439	1.5	157.44	48.0	50.0	66.0	38.0			
	20.5	3853	1.3	136.65	58.0	50.0	66.0	44.0			
	25.4	3105	2.1	110.10	58.0	50.0	66.0	38.0			
	30.6	2579	2.5	91.45	60.0	50.0	66.0	38.0			
	35.2	2245	2.9	79.61	62.0	50.0	66.0	37.0			
	10.9	7274	0.8	128.79	-	-	66.0	44.0	PKD 6390/42 132M4	425	278
	10.8	6784	0.9	258.36	49.0	50.0	66.0	50.0	PKD 6390/42 132M2	425	278
	14.9	4943	1.1	188.23	49.0	50.0	66.0	45.0			
	18.6	3955	1.2	150.60	49.0	50.0	-	-			
	21.7	3382	1.3	128.79	49.0	50.0	66.0	44.0			
	9.4	7808	0.8	297.35	42.0	45.0	66.0	50.0	PKD 6390/32 132M2	408	278
	10.3	8182	1.1	87.70	61.0	50.0	66.0	42.0	PKD 6390 160M6	410	254-255
	11.8	7121	1.2	76.33	62.0	50.0	66.0	41.0			
	13.4	6269	1.4	67.20	63.0	50.0	66.0	41.0			
	16.1	5227	1.6	56.03	63.0	50.0	66.0	39.0			
	18.7	4500	1.8	48.23	64.0	50.0	66.0	38.0			
	22.9	3671	2.1	39.35	56.0	50.0	66.0	36.0			
	26.7	3145	2.7	33.71	56.0	50.0	66.0	35.0			
	7.8	10566	0.8	179.11	41.0	50.0	66.0	44.0	PKD 6390 132M4	374	254-255
	9.3	8895	0.9	150.79	49.0	50.0	66.0	44.0			
	10.8	7631	0.9	129.36	-	-	-	-			
	13.3	6228	1.3	105.58	58.0	50.0	66.0	43.0			
	16.0	5174	1.6	87.70	61.0	50.0	66.0	42.0			
	18.3	4503	1.8	76.33	62.0	50.0	66.0	41.0			
	20.8	3964	2.1	67.20	63.0	50.0	66.0	41.0			
	25.0	3305	2.5	56.03	63.0	50.0	66.0	39.0			
	29.0	2845	2.8	48.23	64.0	50.0	66.0	38.0			
	11.9	6639	0.9	235.45	41.0	50.0	66.0	50.0	PKD 6390 132M2	374	254-255
	14.1	5590	1.1	198.23	41.0	50.0	66.0	50.0			
	15.6	5051	1.2	179.11	41.0	50.0	66.0	44.0			
	18.6	4252	1.5	150.79	49.0	50.0	66.0	44.0			
	21.6	3648	1.4	129.36	58.0	50.0	66.0	50.0			
	26.5	2977	2.1	105.58	58.0	50.0	66.0	43.0			
	31.9	2473	2.5	87.70	61.0	50.0	66.0	42.0			
	36.7	2152	2.9	76.33	62.0	50.0	66.0	41.0			
	14.4	5826	0.9	62.45	32.0	45.0	38.0	27.0	PKD 5390 160M6	270	246-247
	16.5	5089	1.0	54.55	34.0	45.0	38.0	27.0			
	20.0	4198	1.2	45.00	35.0	45.0	38.0	26.0			
	22.6	3708	1.4	39.74	36.0	45.0	38.0	26.0			
	24.9	3378	1.5	36.21	37.0	45.0	38.0	25.0			
	28.7	2923	1.7	31.33	37.0	45.0	38.0	25.0			
	32.9	2553	1.9	27.37	38.0	45.0	38.0	24.0			
	38.5	2181	2.1	23.38	19.0	45.0	38.0	23.0			
	39.9	2107	2.1	22.58	19.0	45.0	38.0	23.0			
	45.1	1860	2.4	19.94	19.0	45.0	38.0	22.0			
	50.1	1675	2.7	17.95	19.0	45.0	38.0	22.0			
	55.0	1527	3.0	16.37	19.0	45.0	38.0	21.0			
	83.8	1002	3.0	10.74	19.0	45.0	38.0	19.0			
	13.7	6047	0.8	102.50	-	-	38.0	30.0	PKD 5390 132M4	234	246-247
	15.9	5198	0.9	88.12	23.0	45.0	38.0	27.0			
	19.4	4258	1.1	72.18	30.0	45.0	38.0	27.0			
	22.4	3684	1.3	62.45	32.0	45.0	38.0	27.0			
	25.7	3218	1.5	54.55	34.0	45.0	38.0	27.0			
	31.1	2655	1.8	45.00	35.0	45.0	38.0	26.0			
	35.2	2344	2.0	39.74	36.0	45.0	38.0	26.0			
	38.7	2136	2.2	36.21	37.0	45.0	38.0	25.0			
	44.7	1848	2.6	31.33	37.0	45.0	38.0	25.0			
	51.2	1615	2.8	27.37	38.0	45.0	38.0	24.0			

P_1 [kW]	n_2 [Min^{-1}]	M_2 [Nm]	f_B	i_{ges}	F_R [N]	F_A [N]	$F_{R\,GR}$ [N]	$F_{A\,GR}$ [N]	Tip / Type / Typ IE2 / IE3	Kg	mm
9.20	16.5	4778	0.8	169.43	23.0	45.0	38.0	34.0	PKD 5390 132M2	234	246-247
	23.3	3384	1.1	120.01	23.0	45.0	38.0	33.0			
	27.3	2890	1.3	102.50	23.0	45.0	38.0	33.0			
	31.8	2485	1.5	88.12	23.0	45.0	38.0	32.0			
	38.8	2035	1.8	72.18	30.0	45.0	38.0	31.0			
	44.8	1761	2.1	62.45	32.0	45.0	38.0	31.0			
	51.3	1538	2.4	54.55	34.0	45.0	38.0	30.0			
	62.2	1269	2.9	45.00	35.0	45.0	38.0	29.0			
	22.2	3784	0.8	40.56	23.0	36.0	28.0	10.0	PKD 4390 160M6	195	246-247
	26.2	3207	0.9	34.38	25.0	35.0	28.0	11.0			
	32.2	2606	1.1	27.93	26.0	35.0	28.0	12.0			
	37.7	2228	1.3	23.88	26.0	34.0	28.0	12.0			
	44.2	1899	1.4	20.35	26.0	34.0	28.0	12.0			
	49.3	1703	1.5	18.25	25.0	33.0	28.0	12.0			
	57.4	1464	1.4	15.69	24.0	32.0	28.0	11.0			
	67.1	1252	1.7	13.42	23.0	31.0	28.0	11.0			
	78.7	1066	1.5	11.43	22.0	30.0	28.0	11.0			
	87.8	956	1.6	10.25	22.0	30.0	28.0	11.0			
	95.5	879	1.8	9.42	21.0	29.0	28.0	11.0			
	101.9	824	1.8	8.83	21.0	29.0	28.0	11.0			
	22.1	3729	0.8	63.21	-	-	28.0	12.0	PKD 4390 132M4	159	238-239
	25.1	3284	0.9	55.67	18.0	35.0	28.0	11.0			
	29.4	2809	1.0	47.61	21.0	35.0	28.0	12.0			
	34.5	2393	1.2	40.56	23.0	36.0	28.0	12.0			
	40.7	2028	1.4	34.38	25.0	35.0	28.0	13.0			
	50.1	1648	1.7	27.93	26.0	35.0	28.0	13.0			
	58.6	1409	1.9	23.88	26.0	34.0	28.0	13.0			
	68.8	1200	2.2	20.35	26.0	34.0	28.0	13.0			
	76.7	1077	2.3	18.25	25.0	33.0	28.0	13.0			
	89.2	926	2.2	15.69	24.0	32.0	28.0	12.0			
	104.3	792	2.5	13.42	23.0	31.0	28.0	12.0			
	122.5	674	2.2	11.43	22.0	30.0	28.0	12.0			
	136.6	605	2.5	10.25	22.0	30.0	28.0	12.0			
	148.6	556	2.7	9.42	21.0	29.0	28.0	11.0			
	158.6	521	2.7	8.83	21.0	29.0	28.0	11.0			
	29.3	2695	0.8	95.57	18.0	35.0	28.0	15.0	PKD 4390 132M2	159	238-239
	32.4	2439	0.9	86.50	18.0	35.0	28.0	15.0			
	36.8	2145	1.0	76.08	18.0	35.0	28.0	15.0			
	40.9	1932	1.1	68.52	18.0	35.0	28.0	16.0			
	44.3	1782	1.2	63.21	18.0	35.0	28.0	16.0			
	50.3	1570	1.4	55.67	18.0	35.0	28.0	16.0			
	58.8	1342	1.6	47.61	21.0	35.0	28.0	16.0			
	69.0	1144	1.9	40.56	23.0	36.0	28.0	16.0			
	81.4	969	2.2	34.38	25.0	35.0	28.0	16.0			
	100.3	788	2.7	27.93	26.0	35.0	28.0	15.0			
	117.3	673	3.0	23.88	26.0	34.0	28.0	15.0			
	47.2	1750	0.9	29.67	2.0	4.0	15.0	5.0	PKD 3390 132M/4	112	230-231
	55.9	1478	1.0	25.06	3.0	5.0	15.0	5.0			
	58.5	1411	1.1	23.92	4.0	5.0	15.0	6.0			
	69.1	1195	1.3	20.25	4.0	6.0	15.0	6.0			
	81.9	1009	1.4	17.10	5.0	6.0	15.0	6.0			
	89.0	928	1.5	15.73	5.0	7.0	15.0	6.0			
	103.4	799	1.7	13.54	5.0	7.0	15.0	6.0			
	110.4	748	1.3	12.68	5.0	6.0	15.0	6.0			
	130.4	634	1.4	10.74	5.0	6.0	15.0	6.0			
	164.7	501	1.8	8.50	5.0	7.0	15.0	6.0			

P_1 [kW]	n_2 [Min^{-1}]	M_2 [Nm]	f_B	i_{ges}	F_R [N]	F_A [N]	$F_{R\,GR}$ [N]	$F_{A\,GR}$ [N]	Tip / Type / Typ IE2 / IE3	Kg	mm
9.20	56.1	1408	0.8	49.94	2.0	4.0	14.0	7.0	PKD 3390 132M/2	112	230-231
	58.7	1344	0.9	47.67	2.0	4.0	15.0	7.0			
	69.4	1138	1.0	40.37	2.0	4.0	15.0	8.0			
	94.4	837	1.4	29.67	2.0	4.0	15.0	8.0			
	111.7	707	1.6	25.06	3.0	5.0	15.0	8.0			
	117.1	674	1.7	23.92	4.0	5.0	15.0	8.0			
	138.3	571	2.0	20.25	4.0	6.0	15.0	8.0			
	163.7	482	2.3	17.10	5.0	6.0	15.0	8.0			
	178.0	444	2.4	15.73	5.0	7.0	15.0	8.0			
	206.8	382	2.7	13.54	5.0	7.0	15.0	8.0			
	220.8	358	2.1	12.68	5.0	6.0	15.0	8.0			
	260.7	303	2.3	10.74	5.0	6.0	15.0	7.0			
	329.4	240	2.8	8.50	5.0	7.0	15.0	7.0			
	129.0	654	0.8	10.85	4.4	7.7	-	-	PKD H 5290 132M4	93	202-203
	145.2	581	0.9	9.64	4.6	7.7	-	-			
	163.6	516	1.0	8.56	4.6	7.7	-	-			
	184.5	457	1.0	7.59	4.7	7.6	-	-			
	218.1	387	1.2	6.42	4.7	7.5	-	-			
	229.1	368	1.1	6.11	4.7	7.4	-	-			
	257.8	327	1.3	5.43	4.6	7.2	-	-			
	291.7	289	1.4	4.80	4.6	7.1	-	-			
	141.9	577	0.8	19.73	4.4	7.7	-	-	PKD H 5290 132M2	93	202-203
	157.0	521	0.9	17.84	4.4	7.7	-	-			
	179.4	456	1.0	15.61	4.4	7.7	-	-			
	201.7	406	1.0	13.88	4.4	7.7	-	-			
	225.8	362	1.1	12.40	4.4	7.7	-	-			
	258.1	317	1.2	10.85	4.4	7.7	-	-			
	290.5	282	1.3	9.64	4.6	7.7	-	-			
	327.1	250	1.5	8.56	4.6	7.7	-	-			
	368.9	222	1.6	7.59	4.7	7.6	-	-			
	436.1	188	1.8	6.42	4.7	7.5	-	-			
	458.3	179	1.8	6.11	4.7	7.4	-	-			
	515.7	159	2.0	5.43	4.6	7.2	-	-			
	583.3	140	2.2	4.80	4.6	7.1	-	-			
	236.5	357	0.8	5.92	4.3	6.7	-	-	PKD F 4290 132M4	81	198-199
	256.9	328	0.8	5.45	4.4	6.7	-	-			
	288.7	292	0.9	4.85	4.4	6.5	-	-			
	255.0	321	0.8	10.98	4.3	6.7	-	-	PKD F 4290 132M2	81	198-199
	286.9	285	0.9	9.76	4.3	6.7	-	-			
	323.0	253	1.0	8.67	4.3	6.7	-	-			
	363.2	225	1.0	7.71	4.3	6.7	-	-			
	411.8	199	1.1	6.80	4.3	6.7	-	-			
	473.0	173	1.2	5.92	4.3	6.7	-	-			
	513.8	159	1.3	5.45	4.4	6.7	-	-			
	577.3	142	1.4	4.85	4.4	6.5	-	-			
11.0	1.5	65762	0.8	607.63	-	-	-	-	PKD G 9390/62 160L6B / 160L6D	1866	282
	1.7	58262	0.9	538.33	-	-	-	-			
	1.9	51323	1.0	474.22	-	-	-	-			
	2.1	46646	1.1	431.00	-	-	-	-			
	2.4	40147	1.3	370.95	-	-	-	-			
	2.8	34710	1.5	320.72	-	-	-	-			
	3.0	32162	1.6	297.17	-	-	-	-			
	3.3	29231	1.8	270.09	-	-	-	-			
	3.9	25272	2.1	233.51	-	-	-	-			
	1.4	66135	0.8	979.31	-	-	-	-	PKD G 9390/62 160M4C	1866	282
	1.7	55145	0.9	816.57	-	-	-	-			
	2.0	47462	1.1	702.80	-	-	-	-			
	2.3	41035	1.2	607.63	-	-	-	-			
	2.6	36355	1.4	538.33	-	-	-	-			
	3.0	32025	1.6	474.22	-	-	-	-			
	3.2	29106	1.7	431.00	-	-	-	-			
	3.8	25051	2.0	370.95	-	-	-	-			
	4.4	21659	2.3	320.72	-	-	-	-			
	4.7	20069	2.5	297.17	-	-	-	-			
	5.2	18240	2.7	270.09	-	-	-	-			

P_1 [kW]	n_2 [Min^{-1}]	M_2 [Nm]	f_B	i_{ges}	F_R [N]	F_A [N]	$F_{R\,GR}$ [N]	$F_{A\,GR}$ [N]	Tip / Type / Typ IE2 / IE3	Kg	mm
11.0	2.1	42506	0.9	1353.86	-	-	-	-	PKD G 9390/62 160M2B / 160M2C	1866	282
	2.4	36583	1.0	1165.22	-	-	-	-			
	2.9	30746	1.2	979.31	-	-	-	-			
	3.4	25637	1.5	816.57	-	-	-	-			
	4.0	22065	1.7	702.80	-	-	-	-			
	4.6	19077	2.0	607.63	-	-	-	-			
	5.2	16901	2.2	538.33	-	-	-	-			
	5.9	14889	2.6	474.22	-	-	-	-			
	6.5	13532	2.8	431.00	-	-	-	-			
	2.3	41800	0.8	386.23	132.0	70.0	160.0	70.0	PKD 9390/52 160L6B / 160L6D	1566	280
	3.2	30455	1.1	281.40	116.0	70.0	160.0	70.0			
	4.0	24152	1.4	223.16	153.0	70.0	160.0	70.0			
	4.7	20756	1.6	191.78	154.0	70.0	160.0	70.0			
	2.3	41178	0.8	609.75	127.0	70.0	160.0	70.0	PKD 9390/52 160M4C	1566	280
	3.2	30001	1.1	444.25	122.0	70.0	160.0	70.0			
	3.6	26083	1.2	386.23	132.0	70.0	160.0	70.0			
	5.0	19004	1.7	281.40	116.0	70.0	160.0	70.0			
	6.3	15070	2.1	223.16	153.0	70.0	160.0	70.0			
	7.3	12951	2.5	191.78	154.0	70.0	160.0	70.0			
	3.3	26561	0.9	846.00	127.0	70.0	160.0	70.0	PKD 9390/52 160M2B / 160M2C	1566	280
	4.0	22183	1.1	706.54	127.0	70.0	160.0	70.0			
	4.6	19144	1.3	609.75	127.0	70.0	160.0	70.0			
	6.3	13948	1.7	444.25	122.0	70.0	160.0	70.0			
	7.2	12126	2.0	386.23	132.0	70.0	160.0	70.0			
	10.0	8835	2.8	281.40	116.0	70.0	160.0	70.0			
	4.5	22373	2.3	200.57	220.0	100.0	-	-	PKD G 9390 160L6B / 160L6D	1735	274-275
	5.2	19344	2.7	173.41	220.0	100.0	-	-			
	3.0	33218	1.0	297.79	143.0	70.0	160.0	70.0	PKD 9390 160L6B / 160L6D	1490	270-271
	3.6	28251	1.2	253.26	148.0	70.0	160.0	70.0			
	4.6	22044	1.5	197.62	152.0	70.0	160.0	70.0			
	5.9	17079	2.0	153.11	155.0	70.0	160.0	70.0			
	7.5	13413	2.5	120.24	143.0	70.0	160.0	70.0			
	8.8	11419	2.9	102.37	143.0	70.0	160.0	70.0			
	4.7	21004	1.5	297.79	143.0	70.0	160.0	70.0	PKD 9390 160M4C	1490	270-271
	5.5	17863	1.8	253.26	148.0	70.0	160.0	70.0			
	7.1	13939	2.3	197.62	152.0	70.0	160.0	70.0			
	9.1	10799	3.0	153.11	155.0	70.0	160.0	70.0			
	9.4	10040	2.4	297.79	143.0	70.0	160.0	70.0	PKD 9390 160M2B / 160M2C	1490	270-271
	11.1	8539	2.8	253.26	148.0	70.0	160.0	70.0			
	3.8	25579	0.8	236.35	105.0	65.0	120.0	65.0	PKD G 8390/52 160L6B / 160L6D	996	280
	5.2	18636	1.1	172.19	114.0	65.0	120.0	65.0			
	6.2	15677	1.2	144.85	116.0	65.0	120.0	65.0			
	5.1	18359	1.0	271.85	98.0	65.0	120.0	65.0	PKD G 8390/52 160M4C	996	280
	5.9	15961	1.1	236.35	105.0	65.0	120.0	65.0			
	8.1	11628	1.5	172.19	114.0	65.0	120.0	65.0			
	9.7	9782	1.8	144.85	116.0	65.0	120.0	65.0			
	4.5	19580	0.8	623.65	98.0	65.0	-	-	PKD G 8390/52 160M2B / 160M2C	996	280
	6.4	13656	1.1	434.96	98.0	65.0	120.0	65.0			
	7.4	11914	1.3	379.47	98.0	65.0	120.0	65.0			
	10.3	8535	1.8	271.85	98.0	65.0	120.0	65.0			
	11.8	7420	2.0	236.35	105.0	65.0	120.0	65.0			
	16.3	5406	2.8	172.19	114.0	65.0	120.0	65.0			
	19.3	4548	3.0	144.85	116.0	65.0	120.0	65.0			
	6.1	15839	0.9	146.35	95.0	60.0	-	-	PKD 8390/52 160L6B / 160L6D	746	280
	7.3	13381	0.9	123.64	79.0	60.0	95.0	60.0			

P_1 [kW]	n_2 [Min^{-1}]	M_2 [Nm]	f_B	i_{ges}	F_R [N]	F_A [N]	$F_{R\ GR}$ [N]	$F_{A\ GR}$ [N]	Tip / Type / Typ IE2 / IE3	Kg	mm
11.0	5.7	16643	0.8	246.45	94.0	60.0	-	-	PKD 8390/52 160M4C	746	280
	7.7	12312	1.1	182.32	83.0	60.0	95.0	60.0			
	9.6	9883	1.3	146.35	95.0	60.0	-	-			
	11.3	8350	1.4	123.64	79.0	60.0	-	-			
	11.4	7738	1.3	246.45	94.0	60.0	-	-	PKD 8390/52 160M2B / 160M2C	746	280
	15.4	5724	1.7	182.32	83.0	60.0	95.0	60.0			
	19.1	4595	2.2	146.35	95.0	60.0	-	-			
	22.6	3882	2.3	123.64	79.0	60.0	-	-			
	7.4	11930	0.8	379.99	71.0	60.0	-	-	PKD 8390/42 160M2B / 160M2C	721	280
	9.8	8980	1.1	286.02	71.0	60.0	95.0	60.0			
	3.9	25732	0.8	230.68	105.0	65.0	120.0	65.0	PKD G 8390 160L6B / 160L6D	920	266-267
	4.6	21645	1.0	194.04	111.0	65.0	120.0	65.0			
	5.9	16941	1.2	151.87	116.0	65.0	120.0	65.0			
	7.0	14250	1.5	127.75	117.0	65.0	120.0	65.0			
	7.7	13009	1.6	116.62	119.0	65.0	120.0	65.0			
	9.9	10110	2.1	90.63	111.0	65.0	120.0	65.0			
	11.5	8739	2.4	78.34	111.0	65.0	-	-			
	13.3	7538	2.8	67.58	111.0	65.0	120.0	65.0			
	6.1	16271	1.2	230.68	105.0	65.0	120.0	65.0	PKD G 8390 160M4C	920	266-267
	7.2	13686	1.5	194.04	111.0	65.0	120.0	65.0			
	9.2	10712	1.9	151.87	116.0	65.0	120.0	65.0			
	11.0	9011	2.2	127.75	117.0	65.0	120.0	65.0			
	12.0	8226	2.4	116.62	119.0	65.0	120.0	65.0			
	12.1	7777	2.0	230.68	105.0	65.0	120.0	65.0	PKD G 8390 160M2B / 160M2C	920	266-267
	14.4	6542	2.3	194.04	111.0	65.0	120.0	65.0			
	18.4	5120	3.0	151.87	116.0	65.0	120.0	65.0			
	6.0	16603	0.8	148.84	88.0	60.0	95.0	60.0	PKD 8390 160L6B / 160L6D	670	262-263
	7.3	13669	1.0	122.54	91.0	60.0	95.0	60.0			
	7.7	13001	1.0	116.55	92.0	60.0	95.0	60.0			
	9.4	10704	1.3	95.96	93.0	60.0	95.0	60.0			
	10.8	9253	1.5	82.95	94.0	60.0	95.0	60.0			
	12.6	7982	1.7	71.56	95.0	60.0	95.0	60.0			
	14.4	6964	2.0	62.43	95.0	60.0	95.0	60.0			
	16.9	5956	2.3	53.39	79.0	60.0	95.0	60.0			
	20.1	4990	2.7	44.73	79.0	60.0	95.0	60.0			
	21.6	4642	2.9	41.61	79.0	60.0	95.0	60.0			
	5.7	17228	0.8	244.25	79.0	60.0	95.0	60.0	PKD 8390 160M4C	670	262-263
	9.4	10498	1.2	148.84	88.0	60.0	95.0	60.0			
	11.4	8643	1.5	122.54	91.0	60.0	95.0	60.0			
	12.0	8221	1.6	116.55	92.0	60.0	95.0	60.0			
	14.6	6768	1.9	95.96	93.0	60.0	95.0	60.0			
	16.9	5851	2.2	82.95	94.0	60.0	95.0	60.0			
	19.6	5047	2.6	71.56	95.0	60.0	95.0	60.0			
	22.4	4403	3.0	62.43	95.0	60.0	95.0	60.0			
	9.4	10002	1.0	296.68	79.0	60.0	95.0	60.0	PKD 8390 160M2B / 160M2C	670	262-263
	11.5	8235	1.2	244.25	79.0	60.0	95.0	60.0			
	18.8	5018	2.0	148.84	88.0	60.0	95.0	60.0			
	22.8	4131	2.4	122.54	91.0	60.0	95.0	60.0			
	24.0	3929	2.5	116.55	92.0	60.0	95.0	60.0			
	10.4	8459	0.8	269.43	47.0	50.0	-	-	PKD 7390/42 160M2B / 160M2C	461	278
	14.3	6163	0.9	196.30	47.0	50.0	66.0	39.0			
	17.8	4931	1.0	157.05	47.0	50.0	66.0	39.0			
	20.8	4217	1.1	134.31	47.0	50.0	66.0	39.0			

P_1 [kW]	n_2 [Min^{-1}]	M_2 [Nm]	f_B	i_{ges}	F_R [N]	F_A [N]	$F_{R\,GR}$ [N]	$F_{A\,GR}$ [N]	Tip / Type / Typ IE2 / IE3	Kg	mm
11.0	9.8	10201	0.9	91.45	58.0	50.0	66.0	36.0	PKD 7390 160L6B / 160L6D	410	258-259
	11.3	8880	1.0	79.61	60.0	50.0	66.0	35.0			
	12.8	7817	1.1	70.08	61.0	50.0	66.0	35.0			
	15.4	6519	1.4	58.44	63.0	50.0	66.0	34.0			
	17.9	5610	1.5	50.29	63.0	50.0	66.0	33.0			
	21.9	4578	1.8	41.04	61.0	50.0	66.0	32.0			
	25.6	3922	2.3	35.16	37.0	50.0	66.0	31.0			
	30.7	3271	2.7	29.32	37.0	50.0	66.0	29.0			
	8.9	11105	0.8	157.44	37.0	50.0	66.0	35.0	PKD 7390 160M4C	410	258-259
	12.7	7766	1.1	110.10	54.0	50.0	66.0	36.0			
	15.3	6450	1.3	91.45	58.0	50.0	66.0	36.0			
	17.6	5615	1.5	79.61	60.0	50.0	66.0	35.0			
	20.0	4943	1.7	70.08	61.0	50.0	66.0	35.0			
	24.0	4122	2.1	58.44	63.0	50.0	66.0	34.0			
	27.8	3547	2.3	50.29	63.0	50.0	66.0	33.0			
	34.1	2895	2.7	41.04	61.0	50.0	66.0	32.0			
	15.0	6297	1.0	186.78	37.0	50.0	66.0	42.0	PKD 7390 160M2B / 160M2C	410	258-259
	17.8	5308	1.2	157.44	37.0	50.0	66.0	35.0			
	25.4	3712	1.7	110.10	54.0	50.0	66.0	36.0			
	30.6	3083	2.1	91.45	58.0	50.0	66.0	36.0			
	35.2	2684	2.4	79.61	60.0	50.0	66.0	35.0			
	40.0	2363	2.7	70.08	61.0	50.0	66.0	35.0			
	10.8	8111	0.8	258.36	49.0	50.0	-	-	PKD 6390/42 160M2B / 160M2C	461	278
	14.9	5910	0.9	188.23	49.0	50.0	66.0	45.0			
	18.6	4728	1.0	150.60	49.0	50.0	66.0	45.0			
	21.7	4043	1.1	128.79	49.0	50.0	66.0	44.0			
	10.3	9783	0.9	87.70	59.0	50.0	66.0	40.0	PKD 6390 160L6B / 160L6D	410	254-255
	11.8	8514	1.0	76.33	60.0	50.0	66.0	40.0			
	13.4	7496	1.1	67.20	61.0	50.0	66.0	39.0			
	16.1	6250	1.4	56.03	63.0	50.0	66.0	38.0			
	18.7	5380	1.5	48.23	63.0	50.0	66.0	37.0			
	22.9	4389	1.8	39.35	61.0	50.0	66.0	36.0			
	26.7	3760	2.3	33.71	41.0	50.0	66.0	35.0			
	32.0	3136	2.7	28.11	41.0	50.0	66.0	32.0			
	9.3	10636	0.8	150.79	41.0	50.0	66.0	40.0	PKD 6390 160M4C	410	254-255
	16.0	6186	1.3	87.70	59.0	50.0	66.0	40.0			
	18.3	5384	1.5	76.33	60.0	50.0	66.0	40.0			
	20.8	4740	1.7	67.20	61.0	50.0	66.0	39.0			
	25.0	3952	2.1	56.03	63.0	50.0	66.0	38.0			
	29.0	3402	2.3	48.23	63.0	50.0	66.0	37.0			
	35.6	2775	2.7	39.35	61.0	50.0	66.0	36.0			
	15.6	6039	1.0	179.11	41.0	50.0	66.0	44.0	PKD 6390 160M2B / 160M2C	410	254-255
	18.6	5084	1.2	150.79	41.0	50.0	66.0	40.0			
	31.9	2957	2.1	87.70	59.0	50.0	66.0	40.0			
	36.7	2573	2.4	76.33	60.0	50.0	66.0	40.0			
	41.7	2266	2.8	67.20	61.0	50.0	66.0	39.0			
	16.5	6085	0.8	54.55	32.0	45.0	38.0	25.0	PKD 5390 160L6B / 160L6D	270	246-247
	20.0	5020	1.0	45.00	34.0	45.0	38.0	25.0			
	22.6	4433	1.1	39.74	35.0	45.0	38.0	25.0			
	24.9	4039	1.2	36.21	36.0	45.0	38.0	24.0			
	28.7	3495	1.4	31.33	37.0	45.0	38.0	24.0			
	32.9	3053	1.6	27.37	37.0	45.0	38.0	23.0			
	38.5	2608	1.7	23.38	38.0	45.0	38.0	23.0			
	39.9	2519	1.8	22.58	38.0	45.0	38.0	22.0			
	45.1	2224	2.0	19.94	23.0	45.0	38.0	22.0			
	50.1	2002	2.3	17.95	23.0	45.0	38.0	22.0			
	55.0	1826	2.5	16.37	23.0	45.0	38.0	21.0			
	66.7	1506	3.0	13.50	23.0	45.0	38.0	20.0			
	83.8	1198	2.5	10.74	23.0	45.0	38.0	19.0			
	89.4	1123	2.6	10.07	23.0	45.0	38.0	18.0			
	95.1	1055	2.6	9.46	23.0	45.0	38.0	18.0			
	110.7	907	3.0	8.13	23.0	45.0	38.0	17.0			

P_1 [kW]	n_2 [Min^{-1}]	M_2 [Nm]	f_B	i_{ges}	F_R [N]	F_A [N]	$F_{R\,GR}$ [N]	$F_{A\,GR}$ [N]	Tip / Type / Typ IE2 / IE3	Kg	mm
11.0	15.9	6215	0.8	88.12	16.0	45.0	38.0	25.0	PKD 5390 160M4C	270	246-247
	19.4	5091	0.9	72.18	25.0	45.0	38.0	25.0			
	22.4	4405	1.1	62.45	29.0	45.0	38.0	25.0			
	25.7	3848	1.2	54.55	32.0	45.0	38.0	25.0			
	31.1	3174	1.5	45.00	34.0	45.0	38.0	25.0			
	35.2	2803	1.7	39.74	35.0	45.0	38.0	25.0			
	38.7	2554	1.9	36.21	36.0	45.0	38.0	24.0			
	44.7	2210	2.2	31.33	37.0	45.0	38.0	24.0			
	51.2	1931	2.4	27.37	37.0	45.0	38.0	23.0			
	59.9	1649	2.6	23.38	38.0	45.0	38.0	23.0			
	62.0	1593	2.7	22.58	38.0	45.0	38.0	22.0			
	31.8	2971	1.2	88.12	16.0	45.0	38.0	25.0	PKD 5390 160M2B / 160M2C	270	246-247
	38.8	2434	1.5	72.18	25.0	45.0	38.0	25.0			
	44.8	2105	1.7	62.45	29.0	45.0	38.0	25.0			
	51.3	1839	2.0	54.55	32.0	45.0	38.0	25.0			
	62.2	1517	2.4	45.00	34.0	45.0	38.0	25.0			
	70.5	1340	2.7	39.74	35.0	45.0	38.0	25.0			
	77.3	1221	3.0	36.21	36.0	45.0	38.0	24.0			
	26.2	3835	0.8	34.38	23.0	33.0	28.0	11.0	PKD 4390 160L6B / 160L6D	195	238-239
	32.2	3116	0.9	27.93	25.0	33.0	28.0	12.0			
	37.7	2664	1.1	23.88	25.0	33.0	28.0	12.0			
	44.2	2270	1.2	20.35	25.0	32.0	28.0	12.0			
	49.3	2036	1.3	18.25	24.0	32.0	28.0	12.0			
	57.4	1750	1.2	15.69	23.0	31.0	28.0	11.0			
	67.1	1497	1.4	13.42	23.0	30.0	28.0	11.0			
	78.7	1275	1.2	11.43	22.0	29.0	28.0	11.0			
	87.8	1143	1.4	10.25	21.0	29.0	28.0	11.0			
	95.5	1051	1.5	9.42	21.0	28.0	28.0	11.0			
	101.9	985	1.5	8.83	21.0	28.0	28.0	11.0			
	29.4	3358	0.8	47.61	18.0	32.0	28.0	10.0	PKD 4390 160M4C	195	238-239
	34.5	2861	1.0	40.56	21.0	32.0	28.0	10.0			
	40.7	2425	1.2	34.38	23.0	33.0	28.0	11.0			
	50.1	1970	1.4	27.93	25.0	33.0	28.0	12.0			
	58.6	1684	1.6	23.88	25.0	33.0	28.0	12.0			
	68.8	1435	1.8	20.35	25.0	32.0	28.0	12.0			
	76.7	1287	1.9	18.25	24.0	32.0	28.0	12.0			
	89.2	1107	1.8	15.69	23.0	31.0	28.0	11.0			
	104.3	947	2.1	13.42	23.0	30.0	28.0	11.0			
	122.5	806	1.9	11.43	22.0	29.0	28.0	11.0			
	136.6	723	2.1	10.25	21.0	29.0	28.0	11.0			
	148.6	664	2.3	9.42	21.0	28.0	28.0	11.0			
	158.6	623	2.2	8.83	21.0	28.0	28.0	11.0			
	40.9	2310	0.9	68.52	18.0	32.0	28.0	12.0	PKD 4390 160M2B / 160M2C	195	238-239
	50.3	1877	1.1	55.67	18.0	32.0	28.0	13.0			
	58.8	1605	1.3	47.61	18.0	32.0	28.0	10.0			
	69.0	1367	1.6	40.56	21.0	32.0	28.0	10.0			
	81.4	1159	1.8	34.38	23.0	33.0	28.0	10.0			
	100.3	942	2.3	27.93	25.0	33.0	28.0	12.0			
	117.3	805	2.5	23.88	25.0	33.0	28.0	12.0			
	137.6	686	2.9	20.35	25.0	32.0	28.0	12.0			
	153.4	615	3.0	18.25	24.0	32.0	28.0	12.0			
	178.5	529	2.9	15.69	23.0	31.0	28.0	11.0			
	245.0	385	3.0	11.43	22.0	29.0	28.0	11.0			
15.0	1.9	69986	0.8	474.22	-	-	-	-	PKD G 9390/62 180L6A / 180L6B	1907	282
	2.1	63608	0.8	431.00	-	-	-	-			
	2.4	54746	1.0	370.95	-	-	-	-			
	2.8	47332	1.1	320.72	-	-	-	-			
	3.0	43857	1.2	297.17	-	-	-	-			
	3.3	39860	1.3	270.09	-	-	-	-			
	3.9	34462	1.5	233.51	-	-	-	-			
	4.3	30837	1.7	208.95	-	-	-	-			

P_1 [kW]	n_2 [Min^{-1}]	M_2 [Nm]	f_B	i_{ges}	F_R [N]	F_A [N]	$F_{R\,GR}$ [N]	$F_{A\,GR}$ [N]	Tip / Type / Typ IE2 / IE3	Kg	mm
15.0	2.0	64720	0.8	702.80	-	-	-	-	PKD G 9390/62 160L4B	1866	282
	2.3	55956	0.9	607.63	-	-	-	-			
	2.6	49574	1.0	538.33	-	-	-	-			
	3.0	43671	1.1	474.22	-	-	-	-			
	3.2	39690	1.3	431.00	-	-	-	-			
	3.8	34161	1.5	370.95	-	-	-	-			
	4.4	29535	1.7	320.72	-	-	-	-			
	4.7	27366	1.8	297.17	-	-	-	-			
	5.2	24872	2.0	270.09	-	-	-	-			
	6.0	21504	2.3	233.51	-	-	-	-			
	2.4	49886	0.8	1165.22	-	-	-	-	PKD G 9390/62 160M2C / 160M2D	1866	282
	2.9	41927	0.9	979.31	-	-	-	-			
	3.4	34960	1.1	816.57	-	-	-	-			
	4.0	30089	1.3	702.80	-	-	-	-			
	4.6	26014	1.5	607.63	-	-	-	-			
	5.2	23047	1.6	538.33	-	-	-	-			
	5.9	20303	1.9	474.22	-	-	-	-			
	6.5	18452	2.1	431.00	-	-	-	-			
	7.5	15881	2.4	370.95	-	-	-	-			
	8.7	13731	2.8	320.72	-	-	-	-			
	9.4	12723	3.0	297.17	-	-	-	-			
	3.2	41530	0.8	281.40	116.0	70.0	160.0	70.0	PKD 9390/52 180L6A / 180L6B	1607	280
	4.0	32934	1.0	223.16	134.0	70.0	160.0	70.0			
	4.7	28303	1.2	191.78	154.0	70.0	-	-			
	3.2	40911	0.8	444.25	122.0	70.0	160.0	70.0	PKD 9390/52 160L4B	1566	280
	3.6	35568	0.9	386.23	104.0	70.0	160.0	70.0			
	5.0	25914	1.2	281.40	116.0	70.0	160.0	70.0			
	6.3	20551	1.6	223.16	134.0	70.0	160.0	70.0			
	7.3	17661	1.8	191.78	154.0	70.0	160.0	70.0			
	4.0	30249	0.8	706.54	122.0	70.0	160.0	70.0	PKD 9390/52 160M2C / 160M2D	1566	280
	4.6	26105	0.9	609.75	122.0	70.0	160.0	70.0			
	6.3	19020	1.3	444.25	122.0	70.0	160.0	70.0			
	7.2	16536	1.5	386.23	104.0	70.0	160.0	70.0			
	10.0	12048	2.0	281.40	116.0	70.0	160.0	70.0			
	12.5	9554	2.5	223.16	134.0	70.0	160.0	70.0			
	14.6	8211	3.0	191.78	154.0	70.0	160.0	70.0			
	4.5	30509	1.7	200.57	220.0	100.0	-	-	PKD G 9390 180L6A / 180L6B	1776	274-275
	5.2	26378	2.0	173.41	220.0	100.0	-	-			
	5.8	23469	2.2	154.29	220.0	100.0	-	-			
	6.7	20311	2.6	133.53	220.0	100.0	-	-			
	7.6	17976	2.9	118.18	220.0	100.0	-	-			
	7.0	19291	2.6	200.57	220.0	100.0	-	-	PKD G 9390 160L4B	1735	274-275
	8.1	16679	3.0	173.41	220.0	100.0	-	-			
	3.6	38524	0.9	253.26	138.0	70.0	160.0	70.0	PKD 9390 180L6A / 180L6B	1531	270-271
	4.6	30060	1.1	197.62	146.0	70.0	160.0	70.0			
	5.9	23290	1.4	153.11	151.0	70.0	160.0	70.0			
	7.5	18290	1.8	120.24	154.0	70.0	160.0	70.0			
	8.8	15572	2.2	102.37	143.0	70.0	160.0	70.0			
	9.8	13953	2.4	91.73	143.0	70.0	160.0	70.0			
	11.3	12167	2.8	79.99	143.0	70.0	160.0	70.0			
	4.7	28642	1.1	297.79	128.0	70.0	160.0	70.0	PKD 9390 160L4B	1490	270-271
	5.5	24359	1.3	253.26	138.0	70.0	160.0	70.0			
	7.1	19008	1.7	197.62	146.0	70.0	160.0	70.0			
	9.1	14726	2.2	153.11	151.0	70.0	160.0	70.0			
	11.6	11565	2.8	120.24	154.0	70.0	160.0	70.0			
	9.4	13691	1.8	297.79	128.0	70.0	160.0	70.0	PKD 9390 160M2C / 160M2D	1490	270-271
	11.1	11644	2.1	253.26	138.0	70.0	160.0	70.0			
	14.2	9086	2.7	197.62	146.0	70.0	160.0	70.0			
	5.2	25412	0.8	172.19	114.0	65.0	120.0	65.0	PKD G 8390/52 180L6A / 180L6B	1037	280
	6.2	21377	0.9	144.85	103.0	65.0	120.0	65.0			

P_1 [kW]	n_2 [Min^{-1}]	M_2 [Nm]	f_B	i_{ges}	F_R [N]	F_A [N]	$F_{R\,GR}$ [N]	$F_{A\,GR}$ [N]	Tip / Type / Typ IE2 / IE3	Kg	mm
15.0	5.9 8.1 9.7	21765 15857 13339	0.8 1.1 1.3	236.35 172.19 144.85	105.0 114.0 103.0	65.0 65.0 65.0	120.0 120.0 120.0	65.0 65.0 65.0	PKD G 8390/52 160L4B	996	280
	6.4 7.4 10.3 11.8 16.3 19.3	18622 16246 11639 10119 7372 6201	0.8 0.9 1.3 1.5 2.1 2.2	434.96 379.47 271.85 236.35 172.19 144.85	105.0 105.0 105.0 105.0 114.0 103.0	65.0 65.0 65.0 65.0 65.0 65.0	120.0 - 120.0 120.0 120.0 120.0	65.0 - 65.0 65.0 65.0 65.0	PKD G 8390/52 160M2C / 160M2D	996	280
	7.7 9.6 11.3	16790 13477 11386	0.8 1.0 1.1	182.32 146.35 123.64	83.0 95.0 79.0	60.0 60.0 60.0	95.0 - 95.0	60.0 - 60.0	PKD 8390/52 160L4B	746	280
	11.4 15.4 19.1 22.6	10551 7806 6266 5293	0.9 1.3 1.6 1.7	246.45 182.32 146.35 123.64	83.0 83.0 95.0 79.0	60.0 60.0 60.0 60.0	- 95.0 - 95.0	- 60.0 - 60.0	PKD 8390/52 160M2C / 160M2D	746	280
	9.8	12245	0.8	286.02	71.0	60.0	95.0	60.0	PKD 8390/42 160M2C / 160M2D	721	280
	5.9 7.0 7.7 9.9 11.5 13.3 15.3 17.9	23101 19432 17739 13786 11916 10280 8968 7669	0.9 1.1 1.2 1.5 1.8 2.0 2.3 2.7	151.87 127.75 116.62 90.63 78.34 67.58 58.96 50.42	109.0 113.0 116.0 118.0 105.0 105.0 105.0 105.0	65.0 65.0 65.0 65.0 65.0 65.0 65.0 65.0	120.0 120.0 120.0 120.0 - 120.0 120.0 120.0	65.0 65.0 65.0 65.0 - 65.0 65.0 65.0	PKD G 8390 180L6A / 180L6B	961	266-267
	6.1 7.2 9.2 11.0 12.0 15.4 17.9	22187 18663 14607 12287 11217 8717 7535	0.9 1.1 1.4 1.6 1.8 2.3 2.7	230.68 194.04 151.87 127.75 116.62 90.63 78.34	88.0 99.0 109.0 113.0 116.0 118.0 -	65.0 65.0 65.0 65.0 65.0 65.0 -	120.0 120.0 120.0 120.0 120.0 120.0 -	65.0 65.0 65.0 65.0 65.0 65.0 -	PKD G 8390 160L4B	920	266-267
	12.1 14.4 18.4 21.9 24.0	10605 8921 6982 5873 5362	1.4 1.7 2.2 2.6 2.8	230.68 194.04 151.87 127.75 116.62	88.0 99.0 109.0 113.0 116.0	65.0 65.0 65.0 65.0 65.0	120.0 120.0 120.0 120.0 120.0	65.0 65.0 65.0 65.0 65.0	PKD G 8390 160M2C / 160M2D	920	266-267
	7.7 9.4 10.8 12.6 14.4 16.9 20.1 21.6 25.1 28.7	17729 14597 12618 10885 9496 8121 6804 6329 5461 4764	0.8 0.9 1.1 1.3 1.4 1.7 2.0 2.2 2.5 2.9	116.55 95.96 82.95 71.56 62.43 53.39 44.73 41.61 35.90 31.32	87.0 90.0 92.0 93.0 94.0 94.0 89.0 79.0 79.0 79.0	60.0 60.0 60.0 60.0 60.0 60.0 60.0 60.0 60.0 60.0	95.0 95.0 95.0 95.0 95.0 95.0 95.0 95.0 95.0 95.0	60.0 60.0 60.0 60.0 60.0 60.0 60.0 60.0 60.0 60.0	PKD 8390 180L6A / 180L6B	711	262-263
	9.4 11.4 12.0 14.6 16.9 19.6 22.4 26.2 31.3	14316 11786 11210 9230 7978 6883 6005 5135 4302	0.9 1.1 1.2 1.4 1.6 1.9 2.2 2.5 3.0	148.84 122.54 116.55 95.96 82.95 71.56 62.43 53.39 44.73	79.0 86.0 87.0 90.0 92.0 93.0 94.0 94.0 89.0	60.0 60.0 60.0 60.0 60.0 60.0 60.0 60.0 60.0	95.0 95.0 95.0 95.0 95.0 95.0 95.0 95.0 95.0	60.0 60.0 60.0 60.0 60.0 60.0 60.0 60.0 60.0	PKD 8390 160L4B	670	262-263

P_1 [kW]	n_2 [Min^{-1}]	M_2 [Nm]	f_B	i_{ges}	F_R [N]	F_A [N]	$F_{R\,GR}$ [N]	$F_{A\,GR}$ [N]	Tip / Type / Typ IE2 / IE3	Kg	mm
15.0	11.5	11229	0.9	244.25	79.0	60.0	-	-	PKD 8390 160M2C / 160M2D	670	262-263
	18.8	6843	1.4	148.84	79.0	60.0	95.0	60.0			
	22.8	5634	1.8	122.54	86.0	60.0	95.0	60.0			
	24.0	5358	1.8	116.55	87.0	60.0	95.0	60.0			
	29.2	4412	2.2	95.96	90.0	60.0	95.0	60.0			
	33.8	3814	2.6	82.95	92.0	60.0	95.0	60.0			
	39.1	3290	3.0	71.56	93.0	60.0	95.0	60.0			
	20.8	5750	0.8	134.31	47.0	50.0	-	-	PKD 7390/42 160M2C / 160M2D	461	278
	12.8	10660	0.8	70.08	57.0	50.0	66.0	31.0	PKD 7390 180L6A / 180L6B	451	258-259
	15.4	8889	1.0	58.44	60.0	50.0	66.0	31.0			
	17.9	7650	1.1	50.29	60.0	50.0	66.0	31.0			
	20.1	6816	1.2	44.81	56.0	50.0	-	-			
	21.9	6243	1.3	41.04	58.0	50.0	66.0	30.0			
	25.6	5348	1.7	35.16	56.0	50.0	66.0	30.0			
	30.7	4460	2.0	29.32	54.0	50.0	66.0	29.0			
	35.7	3838	2.3	25.23	37.0	50.0	66.0	28.0			
	40.0	3419	2.6	22.48	37.0	50.0	66.0	26.0			
	43.7	3132	2.8	20.59	37.0	50.0	66.0	26.0			
	49.0	2794	2.9	18.37	37.0	50.0	66.0	26.0			
	64.1	2136	2.6	14.04	37.0	50.0	66.0	23.0			
	71.9	1903	2.8	12.51	37.0	50.0	-	-			
	74.6	1834	2.9	12.06	37.0	50.0	-	-			
	78.5	1743	3.0	11.46	37.0	50.0	-	-			
	12.7	10590	0.8	110.10	41.0	50.0	66.0	30.0	PKD 7390 160L4B	410	258-259
	15.3	8796	1.0	91.45	50.0	50.0	66.0	31.0			
	17.6	7657	1.1	79.61	54.0	50.0	66.0	31.0			
	20.0	6740	1.3	70.08	57.0	50.0	66.0	31.0			
	24.0	5621	1.5	58.44	60.0	50.0	66.0	31.0			
	27.8	4837	1.7	50.29	60.0	50.0	66.0	31.0			
	34.1	3947	2.0	41.04	58.0	50.0	66.0	30.0			
	39.8	3382	2.5	35.16	56.0	50.0	66.0	30.0			
	47.7	2820	3.0	29.32	54.0	50.0	66.0	29.0			
	15.0	8587	0.8	186.78	41.0	50.0	66.0	38.0	PKD 7390 160M2C / 160M2D	410	258-259
	17.8	7238	0.9	157.44	41.0	50.0	66.0	35.0			
	25.4	5062	1.3	110.10	41.0	50.0	66.0	30.0			
	30.6	4204	1.5	91.45	50.0	50.0	66.0	31.0			
	35.2	3660	1.8	79.61	54.0	50.0	66.0	31.0			
	40.0	3222	2.0	70.08	57.0	50.0	66.0	31.0			
	47.9	2687	2.4	58.44	60.0	50.0	66.0	31.0			
	55.7	2312	2.7	50.29	60.0	50.0	66.0	31.0			
	21.7	5514	0.8	128.79	49.0	50.0	-	-	PKD 6390/42 160M2C / 160M2D	461	278
	13.4	10222	0.8	67.20	58.0	50.0	66.0	36.0	PKD 6390 180L6A / 180L6B	451	254-255
	16.1	8523	1.0	56.03	60.0	50.0	66.0	35.0			
	18.7	7336	1.1	48.23	60.0	50.0	66.0	35.0			
	20.9	6536	1.2	42.97	59.0	50.0	66.0	31.0			
	22.9	5986	1.3	39.35	59.0	50.0	66.0	34.0			
	26.7	5128	1.7	33.71	57.0	50.0	66.0	33.0			
	32.0	4276	2.0	28.11	55.0	50.0	66.0	32.0			
	37.2	3680	2.3	24.19	41.0	50.0	66.0	31.0			
	41.7	3280	2.6	21.56	41.0	50.0	66.0	28.0			
	45.6	3003	2.9	19.74	41.0	50.0	66.0	30.0			
	51.1	2680	2.9	17.62	41.0	50.0	66.0	29.0			
	67.7	2022	2.6	13.29	41.0	50.0	66.0	26.0			
	76.0	1801	2.8	11.84	41.0	50.0	66.0	25.0			
	78.8	1737	2.9	11.42	41.0	50.0	66.0	25.0			

P_1 [kW]	n_2 [Min^{-1}]	M_2 [Nm]	f_B	i_{ges}	F_R [N]	F_A [N]	$F_{R\,GR}$ [N]	$F_{A\,GR}$ [N]	Tip / Type / Typ IE2 / IE3	Kg	mm
15.0	16.0	8435	1.0	87.70	52.0	50.0	66.0	36.0	PKD 6390 160L4B	410	254-255
	18.3	7342	1.1	76.33	55.0	50.0	66.0	36.0			
	20.8	6463	1.3	67.20	58.0	50.0	66.0	36.0			
	25.0	5389	1.5	56.03	60.0	50.0	66.0	35.0			
	29.0	4639	1.7	48.23	60.0	50.0	66.0	35.0			
	35.6	3785	2.0	39.35	59.0	50.0	66.0	34.0			
	41.5	3242	2.5	33.71	57.0	50.0	66.0	33.0			
	49.8	2704	3.0	28.11	55.0	50.0	66.0	32.0			
	15.6	8235	0.8	179.11	52.0	50.0	66.0	44.0	PKD 6390 160M2C / 160M2D	410	254-255
	18.6	6933	0.9	150.79	52.0	50.0	66.0	40.0			
	31.9	4032	1.5	87.70	52.0	50.0	66.0	36.0			
	36.7	3509	1.8	76.33	55.0	50.0	66.0	36.0			
	41.7	3089	2.0	67.20	58.0	50.0	66.0	36.0			
	50.0	2576	2.4	56.03	60.0	50.0	66.0	35.0			
	58.1	2217	2.7	48.23	60.0	50.0	66.0	35.0			
	22.6	6045	0.8	39.74	32.0	45.0	38.0	22.0	PKD 5390 180L6A / 180L6B	311	246-247
	32.9	4163	1.2	27.37	36.0	45.0	38.0	22.0			
	38.5	3556	1.3	23.38	37.0	45.0	38.0	21.0			
	39.9	3435	1.3	22.58	37.0	45.0	38.0	21.0			
	45.1	3033	1.5	19.94	37.0	45.0	38.0	21.0			
	50.1	2730	1.7	17.95	37.0	45.0	38.0	20.0			
	55.0	2490	1.8	16.37	37.0	45.0	38.0	20.0			
	66.7	2053	2.2	13.50	33.0	42.0	38.0	19.0			
	75.5	1813	2.3	11.92	33.0	42.0	38.0	19.0			
	83.8	1634	1.9	10.74	33.0	42.0	38.0	18.0			
	89.4	1532	1.9	10.07	33.0	41.0	38.0	18.0			
	95.1	1439	1.9	9.46	32.0	41.0	38.0	18.0			
	110.7	1237	2.2	8.13	16.0	45.0	38.0	17.0			
	22.4	6007	0.8	62.45	16.0	45.0	38.0	22.0	PKD 5390 160L4B	270	246-247
	25.7	5247	0.9	54.55	24.0	45.0	38.0	22.0			
	31.1	4328	1.1	45.00	29.0	45.0	38.0	22.0			
	35.2	3822	1.3	39.74	32.0	45.0	38.0	22.0			
	38.7	3483	1.4	36.21	33.0	45.0	38.0	22.0			
	44.7	3013	1.6	31.33	35.0	45.0	38.0	22.0			
	51.2	2633	1.7	27.37	36.0	45.0	38.0	22.0			
	59.9	2249	1.9	23.38	37.0	45.0	38.0	21.0			
	62.0	2172	2.0	22.58	37.0	45.0	38.0	21.0			
	70.2	1918	2.2	19.94	37.0	45.0	38.0	21.0			
	78.0	1726	2.5	17.95	37.0	45.0	38.0	20.0			
	85.5	1575	2.7	16.37	37.0	45.0	38.0	20.0			
	130.4	1033	2.8	10.74	33.0	42.0	38.0	18.0			
	139.0	969	2.9	10.07	33.0	41.0	38.0	18.0			
	148.0	910	2.9	9.46	32.0	41.0	38.0	18.0			
	31.8	4051	0.9	88.12	16.0	45.0	38.0	25.0	PKD 5390 160M2C / 160M2D	270	246-247
	38.8	3318	1.1	72.18	16.0	45.0	38.0	25.0			
	44.8	2871	1.3	62.45	16.0	45.0	38.0	22.0			
	51.3	2508	1.5	54.55	24.0	45.0	38.0	22.0			
	62.2	2069	1.8	45.00	29.0	45.0	38.0	22.0			
	70.5	1827	2.0	39.74	32.0	45.0	38.0	22.0			
	77.3	1665	2.2	36.21	33.0	45.0	38.0	22.0			
	89.4	1440	2.5	31.33	35.0	45.0	38.0	22.0			
	102.3	1258	2.8	27.37	36.0	45.0	38.0	22.0			
	119.8	1075	3.0	23.38	37.0	45.0	38.0	21.0			
	40.7	3307	0.8	34.38	18.0	27.0	23.0	8.0	PKD 4390 160L4B	195	238-239
	50.1	2686	1.0	27.93	22.0	28.0	25.0	9.0			
	58.6	2297	1.2	23.88	23.0	29.0	26.0	9.0			
	68.8	1957	1.3	20.35	23.0	29.0	27.0	10.0			
	76.7	1755	1.4	18.25	23.0	29.0	27.0	10.0			
	89.2	1509	1.3	15.69	22.0	28.0	26.0	10.0			
	104.3	1291	1.5	13.42	21.0	27.0	26.0	10.0			
	122.5	1099	1.4	11.43	21.0	27.0	26.0	10.0			
	136.6	986	1.5	10.25	20.0	27.0	26.0	10.0			
	148.6	906	1.7	9.42	20.0	26.0	26.0	10.0			
	158.6	849	1.6	8.83	20.0	26.0	26.0	10.0			

P_1 [kW]	n_2 [Min^{-1}]	M_2 [Nm]	f_B	i_{ges}	F_R [N]	F_A [N]	$F_{R\,GR}$ [N]	$F_{A\,GR}$ [N]	Tip / Type / Typ IE2 / IE3	Kg	mm
15.0	50.3	2559	0.8	55.67	18.0	27.0	28.0	11.0	PKD 4390 160M2C / 160M2D	195	238-239
	58.8	2189	1.0	47.61	18.0	27.0	28.0	10.0			
	69.0	1865	1.1	40.56	18.0	27.0	28.0	10.0			
	81.4	1581	1.3	34.38	18.0	27.0	23.0	8.0			
	100.3	1284	1.7	27.93	22.0	28.0	25.0	9.0			
	117.3	1098	1.9	23.88	23.0	29.0	26.0	9.0			
	137.6	936	2.1	20.35	23.0	29.0	27.0	10.0			
	153.4	839	2.2	18.25	23.0	29.0	27.0	10.0			
	178.5	721	2.1	15.69	22.0	28.0	26.0	10.0			
	208.6	617	2.5	13.42	21.0	27.0	26.0	10.0			
	245.0	525	2.2	11.43	21.0	27.0	26.0	10.0			
	273.2	471	2.4	10.25	20.0	27.0	26.0	10.0			
	297.2	433	2.6	9.42	20.0	26.0	26.0	10.0			
	317.1	406	2.6	8.83	20.0	26.0	26.0	10.0			
18.5	2.4	67519	0.8	370.95	-	-	-	-	PKD G 9390/62 200L6B / 200L6C	1965	282
	2.8	58377	0.9	320.72	-	-	-	-			
	3.0	54090	1.0	297.17	-	-	-	-			
	3.3	49161	1.1	270.09	-	-	-	-			
	3.9	42503	1.2	233.51	-	-	-	-			
	4.3	38033	1.4	208.95	-	-	-	-			
	2.6	61142	0.8	538.33	-	-	-	-	PKD G 9390/62 180M4A / 180M4B	1907	282
	3.0	53860	0.9	474.22	-	-	-	-			
	3.2	48952	1.0	431.00	-	-	-	-			
	3.8	42131	1.2	370.95	-	-	-	-			
	4.4	36426	1.4	320.72	-	-	-	-			
	4.7	33752	1.5	297.17	-	-	-	-			
	5.2	30676	1.6	270.09	-	-	-	-			
	6.0	26521	1.9	233.51	-	-	-	-			
	6.7	23732	2.1	208.95	-	-	-	-			
	3.4	43117	0.9	816.57	-	-	-	-	PKD G 9390/62 160M2D / 160L2C	1866	282
	4.0	37110	1.0	702.80	-	-	-	-			
	4.6	32084	1.2	607.63	-	-	-	-			
	5.2	28425	1.3	538.33	-	-	-	-			
	5.9	25040	1.5	474.22	-	-	-	-			
	6.5	22758	1.7	431.00	-	-	-	-			
	7.5	19587	1.9	370.95	-	-	-	-			
	8.7	16935	2.2	320.72	-	-	-	-			
	9.4	15691	2.4	297.17	-	-	-	-			
	10.4	14261	2.7	270.09	-	-	-	-			
	5.0	31961	1.0	281.40	116.0	70.0	160.0	70.0	PKD 9390/52 180M4A / 180M4B	1607	280
	6.3	25346	1.3	223.16	134.0	70.0	160.0	70.0			
	7.3	21782	1.5	191.78	154.0	70.0	-	-			
	4.6	32196	0.8	609.75	116.0	70.0	-	-	PKD 9390/52 160M2D / 160L2C	1566	280
	6.3	23457	1.0	444.25	116.0	70.0	160.0	70.0			
	7.2	20394	1.2	386.23	116.0	70.0	160.0	70.0			
	10.0	14859	1.6	281.40	116.0	70.0	160.0	70.0			
	12.5	11783	2.1	223.16	134.0	70.0	160.0	70.0			
	14.6	10126	2.4	191.78	154.0	70.0	160.0	70.0			
	4.5	37628	1.4	200.57	220.0	100.0	-	-	PKD G 9390 200L6B / 200L6C	1834	274-275
	5.2	32532	1.6	173.41	220.0	100.0	-	-			
	5.8	28945	1.8	154.29	220.0	100.0	-	-			
	6.7	25051	2.1	133.53	220.0	100.0	-	-			
	7.6	22171	2.4	118.18	220.0	100.0	-	-			
	8.8	19169	2.7	102.18	220.0	100.0	-	-			
	7.0	23793	2.1	200.57	220.0	100.0	-	-	PKD G 9390 180M4A / 180M4B	1776	274-275
	8.1	20571	2.4	173.41	220.0	100.0	-	-			
	9.1	18303	2.7	154.29	220.0	100.0	-	-			

P_1 [kW]	n_2 [Min^{-1}]	M_2 [Nm]	f_B	i_{ges}	F_R [N]	F_A [N]	$F_{R\,GR}$ [N]	$F_{A\,GR}$ [N]	Tip / Type / Typ IE2 / IE3	Kg	mm
18.5	4.6	37074	0.9	197.62	139.0	70.0	160.0	70.0	PKD 9390 200L6B / 200L6C	1589	270-271
	7.5	22557	1.5	120.24	152.0	70.0	160.0	70.0			
	8.8	19205	1.7	102.37	153.0	70.0	160.0	70.0			
	9.8	17209	2.0	91.73	155.0	70.0	160.0	70.0			
	11.3	15006	2.2	79.99	128.0	70.0	160.0	70.0			
	13.0	12950	2.6	69.03	128.0	70.0	160.0	70.0			
	4.7	35325	0.9	297.79	128.0	70.0	160.0	70.0	PKD 9390 180M4A / 180M4B	1531	270-271
	5.5	30043	1.1	253.26	138.0	70.0	160.0	70.0			
	7.1	23443	1.4	197.62	139.0	70.0	160.0	70.0			
	9.1	18163	1.8	153.11	147.0	70.0	160.0	70.0			
	11.6	14263	2.2	120.24	152.0	70.0	160.0	70.0			
	13.7	12144	2.6	102.37	153.0	70.0	160.0	70.0			
	15.3	10881	2.9	91.73	155.0	70.0	160.0	70.0			
	9.4	16885	1.4	297.79	128.0	70.0	160.0	70.0	PKD 9390 160M2D / 160L2C	1490	270-271
	11.1	14360	1.7	253.26	138.0	70.0	160.0	70.0			
	14.2	11205	2.2	197.62	139.0	70.0	160.0	70.0			
	18.3	8682	2.8	153.11	147.0	70.0	160.0	70.0			
	8.1	19557	0.9	172.19	94.0	65.0	120.0	65.0	PKD G 8390/52 180M4A / 180M4B	1037	280
	9.7	16452	1.1	144.85	103.0	65.0	120.0	65.0			
	7.4	20037	0.8	379.47	94.0	65.0	-	-	PKD G 8390/52 160M2D / 160L2C	996	280
	10.3	14354	1.1	271.85	94.0	65.0	120.0	65.0			
	11.8	12480	1.2	236.35	94.0	65.0	120.0	65.0			
	16.3	9092	1.7	172.19	94.0	65.0	120.0	65.0			
	19.3	7648	1.8	144.85	103.0	65.0	120.0	65.0			
	9.6	16622	0.8	146.35	95.0	60.0	-	-	PKD 8390/52 180M4A / 180M4B	787	280
	11.3	14043	0.9	123.64	79.0	60.0	95.0	60.0			
	11.4	13013	0.8	246.45	95.0	60.0	-	-	PKD 8390/52 160M2D / 160L2C	746	280
	15.4	9627	1.0	182.32	95.0	60.0	-	-			
	19.1	7728	1.3	146.35	95.0	60.0	-	-			
	22.6	6528	1.4	123.64	79.0	60.0	95.0	60.0			
	7.0	23966	0.9	127.75	107.0	65.0	120.0	65.0	PKD G 8390 200L6B / 200L6C	1019	266-267
	9.9	17003	1.2	90.63	116.0	65.0	120.0	65.0			
	11.5	14697	1.4	78.34	119.0	65.0	120.0	65.0			
	13.3	12678	1.7	67.58	119.0	65.0	120.0	65.0			
	15.3	11061	1.9	58.96	120.0	65.0	120.0	65.0			
	17.9	9459	2.2	50.42	88.0	65.0	120.0	65.0			
	21.3	7924	2.7	42.24	88.0	65.0	120.0	65.0			
	25.3	6666	2.8	35.53	88.0	65.0	120.0	65.0			
	7.2	23018	0.9	194.04	99.0	65.0	120.0	65.0	PKD G 8390 180M4A / 180M4B	961	266-267
	9.2	18016	1.1	151.87	101.0	65.0	120.0	65.0			
	11.0	15154	1.3	127.75	107.0	65.0	120.0	65.0			
	12.0	13834	1.4	116.62	112.0	65.0	120.0	65.0			
	15.4	10751	1.9	90.63	116.0	65.0	120.0	65.0			
	17.9	9293	2.2	78.34	-	-	-	-			
	20.7	8017	2.5	67.58	119.0	65.0	120.0	65.0			
	23.7	6994	2.9	58.96	120.0	65.0	120.0	65.0			
	12.1	13080	1.2	230.68	99.0	65.0	120.0	65.0	PKD G 8390 160M2D / 160L2C	920	266-267
	14.4	11002	1.4	194.04	99.0	65.0	120.0	65.0			
	18.4	8611	1.8	151.87	101.0	65.0	120.0	65.0			
	21.9	7244	2.1	127.75	107.0	65.0	120.0	65.0			
	24.0	6613	2.3	116.62	112.0	65.0	120.0	65.0			
	30.9	5139	3.0	90.63	116.0	65.0	120.0	65.0			

P_1 [kW]	n_2 [Min^{-1}]	M_2 [Nm]	f_B	i_{ges}	F_R [N]	F_A [N]	$F_{R\,GR}$ [N]	$F_{A\,GR}$ [N]	Tip / Type / Typ IE2 / IE3	Kg	mm
18.5	9.4	18002	0.8	95.96	86.0	60.0	95.0	60.0	PKD 8390 200L6B / 200L6C	769	262-263
	10.8	15562	0.9	82.95	89.0	60.0	95.0	60.0			
	12.6	13425	1.0	71.56	91.0	60.0	95.0	60.0			
	14.4	11712	1.2	62.43	92.0	60.0	95.0	60.0			
	16.9	10016	1.4	53.39	91.0	60.0	95.0	60.0			
	20.1	8392	1.6	44.73	87.0	60.0	95.0	60.0			
	21.6	7806	1.7	41.61	86.0	60.0	95.0	60.0			
	25.1	6735	2.0	35.90	79.0	60.0	95.0	60.0			
	28.7	5876	2.3	31.32	79.0	60.0	95.0	60.0			
	33.6	5026	2.7	26.79	79.0	60.0	95.0	60.0			
	11.4	14536	0.9	122.54	86.0	60.0	95.0	60.0	PKD 8390 180M4A / 180M4B	711	262-263
	12.0	13826	0.9	116.55	82.0	60.0	95.0	60.0			
	14.6	11383	1.1	95.96	86.0	60.0	95.0	60.0			
	16.9	9840	1.3	82.95	89.0	60.0	95.0	60.0			
	19.6	8489	1.5	71.56	91.0	60.0	95.0	60.0			
	22.4	7406	1.8	62.43	92.0	60.0	95.0	60.0			
	26.2	6333	2.1	53.39	91.0	60.0	95.0	60.0			
	31.3	5306	2.5	44.73	87.0	60.0	95.0	60.0			
	33.6	4936	2.6	41.61	86.0	60.0	95.0	60.0			
	18.8	8440	1.2	148.84	86.0	60.0	95.0	60.0	PKD 8390 160M2D / 160L2C	670	262-263
	22.8	6948	1.4	122.54	86.0	60.0	95.0	60.0			
	24.0	6609	1.5	116.55	82.0	60.0	95.0	60.0			
	29.2	5441	1.8	95.96	86.0	60.0	95.0	60.0			
	33.8	4703	2.1	82.95	89.0	60.0	95.0	60.0			
	39.1	4058	2.4	71.56	91.0	60.0	95.0	60.0			
	44.9	3540	2.8	62.43	92.0	60.0	95.0	60.0			
	15.4	10964	0.8	58.44	57.0	50.0	66.0	28.0	PKD 7390 200L6B / 200L6C	509	258-259
	17.9	9435	0.9	50.29	57.0	50.0	66.0	29.0			
	20.1	8407	1.0	44.81	56.0	50.0	66.0	29.0			
	21.9	7699	1.1	41.04	55.0	50.0	66.0	29.0			
	25.6	6596	1.4	35.16	54.0	50.0	66.0	28.0			
	30.7	5501	1.6	29.32	53.0	50.0	66.0	28.0			
	35.7	4733	1.9	25.23	51.0	50.0	66.0	27.0			
	40.0	4217	2.1	22.48	41.0	50.0	66.0	26.0			
	43.7	3863	2.3	20.59	41.0	50.0	66.0	26.0			
	49.0	3446	2.4	18.37	41.0	50.0	66.0	26.0			
	54.7	3084	2.6	16.44	41.0	50.0	66.0	24.0			
	58.1	2906	2.7	15.49	41.0	50.0	66.0	24.0			
	64.1	2634	2.1	14.04	41.0	50.0	66.0	23.0			
	71.9	2347	2.2	12.51	41.0	50.0	62.0	21.0			
	74.6	2263	2.3	12.06	41.0	50.0	62.0	21.0			
	78.5	2150	2.4	11.46	41.0	50.0	61.0	21.0			
	88.1	1917	2.6	10.22	41.0	50.0	60.0	21.0			
	98.4	1717	2.9	9.15	41.0	50.0	59.0	21.0			
	15.3	10848	0.8	91.45	39.0	50.0	66.0	27.0	PKD 7390 180M4A / 180M4B	451	258-259
	17.6	9444	0.9	79.61	47.0	50.0	66.0	28.0			
	20.0	8313	1.0	70.08	52.0	50.0	66.0	28.0			
	24.0	6932	1.2	58.44	57.0	50.0	66.0	28.0			
	27.8	5966	1.4	50.29	57.0	50.0	66.0	29.0			
	31.2	5316	1.4	44.81	56.0	50.0	66.0	29.0			
	34.1	4868	1.6	41.04	55.0	50.0	66.0	29.0			
	39.8	4171	2.0	35.16	54.0	50.0	66.0	28.0			
	47.7	3478	2.4	29.32	53.0	50.0	66.0	28.0			
	55.5	2993	2.8	25.23	51.0	50.0	66.0	27.0			
	25.4	6243	1.0	110.10	39.0	50.0	66.0	30.0	PKD 7390 160M2D / 160L2C	410	258-259
	30.6	5185	1.2	91.45	39.0	50.0	66.0	27.0			
	35.2	4514	1.4	79.61	47.0	50.0	66.0	28.0			
	40.0	3974	1.6	70.08	52.0	50.0	66.0	28.0			
	47.9	3314	1.9	58.44	57.0	50.0	66.0	28.0			
	55.7	2852	2.2	50.29	57.0	50.0	66.0	29.0			
	68.2	2327	2.5	41.04	55.0	50.0	66.0	29.0			

P_1 [kW]	n_2 [Min^{-1}]	M_2 [Nm]	f_B	i_{ges}	F_R [N]	F_A [N]	$F_{R\,GR}$ [N]	$F_{A\,GR}$ [N]	Tip / Type / Typ IE2 / IE3	Kg	mm
18.5	16.1	10511	0.8	56.03	57.0	50.0	66.0	33.0	PKD 6390 200L6B / 200L6C	509	254-255
	18.7	9048	0.9	48.23	57.0	50.0	66.0	33.0			
	20.9	8061	1.0	42.97	57.0	50.0	66.0	32.0			
	22.9	7382	1.1	39.35	56.0	50.0	66.0	32.0			
	26.7	6324	1.4	33.71	55.0	50.0	66.0	32.0			
	32.0	5274	1.6	28.11	53.0	50.0	66.0	31.0			
	37.2	4538	1.9	24.19	52.0	50.0	66.0	30.0			
	41.7	4045	2.1	21.56	52.0	50.0	66.0	29.0			
	45.6	3703	2.3	19.74	52.0	50.0	66.0	29.0			
	51.1	3306	2.4	17.62	52.0	50.0	66.0	27.0			
	57.1	2957	2.6	15.76	52.0	50.0	66.0	27.0			
	60.7	2782	2.7	14.83	52.0	50.0	66.0	26.0			
	67.7	2493	2.1	13.29	52.0	50.0	66.0	26.0			
	76.0	2221	2.3	11.84	52.0	50.0	66.0	25.0			
	78.8	2142	2.4	11.42	52.0	50.0	66.0	25.0			
	82.9	2035	2.5	10.85	52.0	50.0	66.0	25.0			
	93.0	1816	2.6	9.68	52.0	50.0	66.0	24.0			
	103.9	1625	2.9	8.66	52.0	50.0	66.0	23.0			
	16.0	10403	0.8	87.70	44.0	50.0	66.0	33.0	PKD 6390 180M4A / 180M4B	451	254-255
	18.3	9055	0.9	76.33	49.0	50.0	66.0	33.0			
	20.8	7972	1.0	67.20	53.0	50.0	66.0	33.0			
	25.0	6647	1.2	56.03	57.0	50.0	66.0	33.0			
	29.0	5721	1.4	48.23	57.0	50.0	66.0	33.0			
	32.6	5097	1.5	42.97	57.0	50.0	66.0	32.0			
	35.6	4668	1.6	39.35	56.0	50.0	66.0	32.0			
	41.5	3999	2.1	33.71	55.0	50.0	66.0	32.0			
	49.8	3335	2.5	28.11	53.0	50.0	66.0	31.0			
	57.9	2870	2.9	24.19	52.0	50.0	66.0	30.0			
	31.9	4973	1.3	87.70	44.0	50.0	66.0	33.0	PKD 6390 160M2D / 160L2C	410	254-255
	36.7	4328	1.4	76.33	49.0	50.0	66.0	33.0			
	41.7	3810	1.6	67.20	53.0	50.0	66.0	33.0			
	50.0	3177	2.0	56.03	57.0	50.0	66.0	33.0			
	58.1	2735	2.2	48.23	57.0	50.0	66.0	33.0			
	71.2	2231	2.5	39.35	56.0	50.0	66.0	32.0			
	31.1	5338	0.9	45.00	23.0	45.0	38.0	20.0	PKD 5390 180M4A / 180M4B	311	246-247
	35.2	4714	1.0	39.74	28.0	45.0	38.0	20.0			
	51.2	3247	1.4	27.37	34.0	45.0	38.0	20.0			
	59.9	2773	1.6	23.38	35.0	45.0	38.0	20.0			
	62.0	2679	1.6	22.58	36.0	45.0	38.0	20.0			
	70.2	2365	1.8	19.94	36.0	45.0	38.0	20.0			
	78.0	2129	2.0	17.95	37.0	45.0	38.0	20.0			
	85.5	1942	2.2	16.37	35.0	45.0	38.0	19.0			
	103.7	1601	2.7	13.50	34.0	45.0	38.0	18.0			
	117.4	1414	2.8	11.92	33.0	45.0	38.0	18.0			
	130.4	1274	2.3	10.74	33.0	45.0	38.0	18.0			
	139.0	1195	2.3	10.07	32.0	45.0	38.0	17.0			
	148.0	1122	2.3	9.46	32.0	45.0	38.0	17.0			
	172.2	964	2.7	8.13	31.0	45.0	38.0	17.0			
	38.8	4093	0.9	72.18	23.0	45.0	38.0	25.0	PKD 5390 160M2D / 160L2C	270	246-247
	44.8	3541	1.0	62.45	23.0	45.0	38.0	22.0			
	51.3	3093	1.2	54.55	23.0	45.0	38.0	22.0			
	62.2	2552	1.4	45.00	23.0	45.0	38.0	20.0			
	70.5	2253	1.6	39.74	28.0	45.0	38.0	20.0			
	77.3	2053	1.8	36.21	34.0	45.0	38.0	20.0			
	89.4	1776	2.1	31.33	34.0	45.0	38.0	20.0			
	102.3	1552	2.3	27.37	34.0	45.0	38.0	20.0			
	119.8	1326	2.5	23.38	35.0	45.0	38.0	20.0			
	124.0	1280	2.6	22.58	36.0	45.0	38.0	20.0			
	140.4	1131	2.9	19.94	36.0	45.0	38.0	20.0			

P_1 [kW]	n_2 [Min^{-1}]	M_2 [Nm]	f_B	i_{ges}	F_R [N]	F_A [N]	$F_{R\,GR}$ [N]	$F_{A\,GR}$ [N]	Tip / Type / Typ IE2 / IE3	Kg	mm
18.5	58.8	2700	0.8	47.61	18.0	27.0	28.0	10.0	PKD 4390 160M2D / 160L2C	195	238-239
	69.0	2300	0.9	40.56	18.0	27.0	28.0	10.0			
	81.4	1949	1.1	34.38	18.0	27.0	23.0	8.0			
	100.3	1584	1.3	27.93	18.0	27.0	25.0	9.0			
	117.3	1354	1.5	23.88	18.0	27.0	26.0	9.0			
	137.6	1154	1.7	20.35	18.0	27.0	27.0	10.0			
	153.4	1035	1.8	18.25	18.0	27.0	27.0	10.0			
	178.5	890	1.7	15.69	18.0	27.0	26.0	10.0			
	208.6	761	2.0	13.42	18.0	27.0	26.0	10.0			
	245.0	648	1.8	11.43	18.0	27.0	26.0	10.0			
	273.2	581	2.0	10.25	18.0	27.0	26.0	10.0			
	297.2	534	2.1	9.42	18.0	27.0	26.0	10.0			
	317.1	501	2.1	8.83	18.0	27.0	26.0	10.0			
22.0	2.8	69421	0.8	320.72	-	-	-	-	PKD G 9390/62 200L6C / 200L6D	1965	282
	3.0	64323	0.8	297.17	-	-	-	-			
	3.3	58462	0.9	270.09	-	-	-	-			
	3.9	50544	1.0	233.51	-	-	-	-			
	4.3	45228	1.2	208.95	-	-	-	-			
	3.0	64050	0.8	474.22	-	-	-	-	PKD G 9390/62 180M4B / 180L4B	1907	282
	3.2	58213	0.9	431.00	-	-	-	-			
	3.8	50102	1.0	370.95	-	-	-	-			
	4.4	43318	1.2	320.72	-	-	-	-			
	4.7	40137	1.2	297.17	-	-	-	-			
	5.2	36480	1.4	270.09	-	-	-	-			
	6.0	31539	1.6	233.51	-	-	-	-			
	6.7	28222	1.8	208.95	-	-	-	-			
	4.0	44130	0.9	702.80	-	-	-	-	PKD G 9390/62 180M2A	1907	282
	4.6	38154	1.0	607.63	-	-	-	-			
	5.2	33803	1.1	538.33	-	-	-	-			
	5.9	29777	1.3	474.22	-	-	-	-			
	6.5	27063	1.4	431.00	-	-	-	-			
	7.5	23293	1.6	370.95	-	-	-	-			
	8.7	20139	1.9	320.72	-	-	-	-			
	9.4	18660	2.0	297.17	-	-	-	-			
	10.4	16960	2.2	270.09	-	-	-	-			
	12.0	14663	2.6	233.51	-	-	-	-			
	13.4	13120	2.9	208.95	-	-	-	-			
	5.0	38007	0.8	281.40	93.0	70.0	160.0	70.0	PKD 9390/52 180M4B / 180L4B	1607	280
	6.3	30141	1.1	223.16	121.0	70.0	160.0	70.0			
	7.3	25903	1.2	191.78	154.0	70.0	-	-			
	7.2	24252	1.0	386.23	93.0	70.0	160.0	70.0	PKD 9390/52 180M2A	1607	280
	10.0	17670	1.4	281.40	93.0	70.0	160.0	70.0			
	12.5	14013	1.7	223.16	121.0	70.0	160.0	70.0			
	14.6	12042	2.0	191.78	154.0	70.0	160.0	70.0			
	4.5	44746	1.2	200.57	220.0	100.0	-	-	PKD G 9390 200L6C / 200L6D	1834	274-275
	5.2	38687	1.4	173.41	220.0	100.0	-	-			
	5.8	34422	1.5	154.29	220.0	100.0	-	-			
	6.7	29790	1.8	133.53	220.0	100.0	-	-			
	7.6	26366	2.0	118.18	220.0	100.0	-	-			
	8.8	22796	2.3	102.18	220.0	100.0	-	-			
	10.0	19989	2.6	89.60	220.0	100.0	-	-			
	11.1	18167	2.9	81.43	220.0	100.0	-	-			
	7.0	28294	1.8	200.57	220.0	100.0	-	-	PKD G 9390 180M4B / 180L4B	1776	274-275
	8.1	24462	2.0	173.41	220.0	100.0	-	-			
	9.1	21765	2.3	154.29	220.0	100.0	-	-			
	10.5	18837	2.7	133.53	220.0	100.0	-	-			
	11.8	16671	3.0	118.18	220.0	100.0	-	-			
	14.0	13524	2.8	200.57	220.0	100.0	-	-	PKD G 9390 180M2A	1776	274-275

P_1 [kW]	n_2 [Min^{-1}]	M_2 [Nm]	f_B	i_{ges}	F_R [N]	F_A [N]	$F_{R\,GR}$ [N]	$F_{A\,GR}$ [N]	Tip / Type / Typ IE2 / IE3	Kg	mm
22.0	4.6	44088	0.8	197.62	129.0	70.0	160.0	70.0	PKD 9390 200L6C / 200L6D	1589	270-271
	7.5	26825	1.3	120.24	149.0	70.0	160.0	70.0			
	8.8	22838	1.5	102.37	151.0	70.0	160.0	70.0			
	9.8	20465	1.6	91.73	153.0	70.0	160.0	70.0			
	11.3	17845	1.9	79.99	154.0	70.0	160.0	70.0			
	13.0	15400	2.2	69.03	128.0	70.0	160.0	70.0			
	15.3	13098	2.6	58.71	128.0	70.0	160.0	70.0			
	18.1	11099	3.0	49.75	128.0	70.0	160.0	70.0			
	4.7	42008	0.8	297.79	128.0	70.0	160.0	70.0	PKD 9390 180M4B / 180L4B	1531	270-271
	5.5	35727	0.9	253.26	138.0	70.0	160.0	70.0			
	7.1	27878	1.1	197.62	129.0	70.0	160.0	70.0			
	9.1	21599	1.5	153.11	142.0	70.0	160.0	70.0			
	11.6	16962	1.9	120.24	149.0	70.0	160.0	70.0			
	13.7	14441	2.2	102.37	151.0	70.0	160.0	70.0			
	15.3	12940	2.5	91.73	153.0	70.0	160.0	70.0			
	17.5	11284	2.8	79.99	154.0	70.0	160.0	70.0			
	9.4	20080	1.2	297.79	128.0	70.0	160.0	70.0	PKD 9390 180M2A	1531	270-271
	11.1	17077	1.4	253.26	138.0	70.0	160.0	70.0			
	14.2	13325	1.8	197.62	129.0	70.0	160.0	70.0			
	18.3	10324	2.4	153.11	142.0	70.0	160.0	70.0			
	23.3	8108	3.0	120.24	149.0	70.0	160.0	70.0			
	8.1	23257	0.8	172.19	78.0	65.0	120.0	65.0	PKD G 8390/52 180M4B / 180L4B	1037	280
	9.7	19564	0.9	144.85	103.0	65.0	120.0	65.0			
	10.3	17070	0.9	271.85	78.0	65.0	120.0	65.0	PKD G 8390/52 180M2A	1037	280
	11.8	14841	1.0	236.35	78.0	65.0	120.0	65.0			
	16.3	10812	1.4	172.19	78.0	65.0	120.0	65.0			
	19.3	9095	1.5	144.85	103.0	65.0	120.0	65.0			
	15.4	11448	0.9	182.32	95.0	60.0	-	-	PKD 8390/52 180M2A	787	280
	19.1	9190	1.1	146.35	95.0	60.0	-	-			
	22.6	7764	1.2	123.64	95.0	60.0	95.0	60.0			
	9.9	20219	1.0	90.63	112.0	65.0	120.0	65.0	PKD G 8390 200L6C / 200L6D	1019	266-267
	11.5	17477	1.2	78.34	117.0	65.0	-	-			
	13.3	15077	1.4	67.58	117.0	65.0	120.0	65.0			
	15.3	13154	1.6	58.96	119.0	65.0	120.0	65.0			
	17.9	11249	1.9	50.42	116.0	65.0	120.0	65.0			
	21.3	9424	2.2	42.24	99.0	65.0	120.0	65.0			
	25.3	7927	2.4	35.53	99.0	65.0	120.0	65.0			
	9.2	21424	0.9	151.87	91.0	65.0	120.0	65.0	PKD G 8390 180M4B / 180L4B	961	266-267
	11.0	18021	1.1	127.75	99.0	65.0	120.0	65.0			
	12.0	16451	1.2	116.62	103.0	65.0	120.0	65.0			
	15.4	12785	1.6	90.63	112.0	65.0	120.0	65.0			
	17.9	11051	1.8	78.34	-	-	-	-			
	20.7	9533	2.1	67.58	117.0	65.0	120.0	65.0			
	23.7	8317	2.4	58.96	119.0	65.0	120.0	65.0			
	27.8	7113	2.8	50.42	116.0	65.0	120.0	65.0			
	12.1	15555	1.0	230.68	91.0	65.0	120.0	65.0	PKD G 8390 180M2A	961	266-267
	14.4	13084	1.2	194.04	91.0	65.0	120.0	65.0			
	18.4	10241	1.5	151.87	91.0	65.0	120.0	65.0			
	21.9	8614	1.8	127.75	99.0	65.0	120.0	65.0			
	24.0	7864	1.9	116.62	103.0	65.0	120.0	65.0			
	30.9	6111	2.5	90.63	112.0	65.0	120.0	65.0			
	35.7	5282	2.9	78.34	117.0	65.0	-	-			
	12.6	15965	0.9	71.56	88.0	60.0	95.0	60.0	PKD 8390 200L6C / 200L6D	769	262-263
	14.4	13928	1.0	62.43	90.0	60.0	95.0	60.0			
	16.9	11911	1.1	53.39	89.0	60.0	95.0	60.0			
	20.1	9979	1.4	44.73	86.0	60.0	95.0	60.0			
	21.6	9283	1.5	41.61	84.0	60.0	95.0	60.0			
	25.1	8009	1.7	35.90	82.0	60.0	95.0	60.0			
	28.7	6987	2.0	31.32	80.0	60.0	95.0	60.0			
	33.6	5977	2.3	26.79	86.0	60.0	95.0	60.0			
	40.1	5006	2.7	22.44	86.0	60.0	95.0	59.0			

P_1 [kW]	n_2 [Min^{-1}]	M_2 [Nm]	f_B	i_{ges}	F_R [N]	F_A [N]	$F_{R\,GR}$ [N]	$F_{A\,GR}$ [N]	Tip / Type / Typ IE2 / IE3	Kg	mm
22.0	11.4	17286	0.8	122.54	86.0	60.0	95.0	60.0	PKD 8390 180M4B / 180L4B	711	262-263
	12.0	16441	0.8	116.55	82.0	60.0	95.0	60.0			
	14.6	13537	1.0	95.96	81.0	60.0	95.0	60.0			
	16.9	11702	1.1	82.95	85.0	60.0	95.0	60.0			
	19.6	10095	1.3	71.56	88.0	60.0	95.0	60.0			
	22.4	8807	1.5	62.43	90.0	60.0	95.0	60.0			
	26.2	7532	1.7	53.39	89.0	60.0	95.0	60.0			
	31.3	6310	2.1	44.73	86.0	60.0	95.0	60.0			
	33.6	5870	2.2	41.61	84.0	60.0	95.0	60.0			
	39.0	5064	2.6	35.90	82.0	60.0	95.0	60.0			
	44.7	4418	2.9	31.32	80.0	60.0	95.0	60.0			
	18.8	10036	1.0	148.84	86.0	60.0	95.0	60.0	PKD 8390 180M2A	711	262-263
	22.8	8263	1.2	122.54	86.0	60.0	95.0	60.0			
	24.0	7859	1.3	116.55	82.0	60.0	95.0	60.0			
	29.2	6471	1.5	95.96	81.0	60.0	95.0	60.0			
	33.8	5593	1.8	82.95	85.0	60.0	95.0	60.0			
	39.1	4825	2.0	71.56	88.0	60.0	95.0	60.0			
	44.9	4210	2.3	62.43	90.0	60.0	95.0	60.0			
	52.4	3600	2.7	53.39	89.0	60.0	95.0	60.0			
	17.9	11220	0.8	50.29	54.0	50.0	66.0	27.0	PKD 7390 200L6C / 200L6D	509	258-259
	20.1	9997	0.8	44.81	53.0	50.0	66.0	27.0			
	21.9	9156	0.9	41.04	53.0	50.0	66.0	27.0			
	25.6	7844	1.1	35.16	52.0	50.0	66.0	27.0			
	30.7	6541	1.4	29.32	51.0	50.0	66.0	26.0			
	35.7	5629	1.6	25.23	49.0	50.0	66.0	26.0			
	40.0	5015	1.8	22.48	48.0	50.0	66.0	26.0			
	43.7	4594	1.9	20.59	48.0	50.0	66.0	25.0			
	49.0	4098	2.0	18.37	47.0	50.0	66.0	25.0			
	54.7	3668	2.1	16.44	44.0	50.0	66.0	24.0			
	58.1	3456	2.3	15.49	44.0	50.0	66.0	24.0			
	64.1	3132	1.7	14.04	44.0	50.0	66.0	23.0			
	71.9	2791	1.9	12.51	41.0	50.0	62.0	21.0			
	74.6	2691	2.0	12.06	40.0	50.0	62.0	21.0			
	78.5	2557	2.1	11.46	39.0	50.0	61.0	21.0			
	88.1	2280	2.2	10.22	39.0	50.0	60.0	21.0			
	98.4	2041	2.4	9.15	39.0	50.0	59.0	21.0			
	17.6	11230	0.8	79.61	47.0	50.0	66.0	28.0	PKD 7390 180M4B / 180L4B	451	258-259
	20.0	9886	0.9	70.08	45.0	50.0	66.0	25.0			
	24.0	8244	1.0	58.44	52.0	50.0	66.0	26.0			
	27.8	7094	1.2	50.29	54.0	50.0	66.0	27.0			
	31.2	6321	1.2	44.81	53.0	50.0	66.0	27.0			
	34.1	5789	1.3	41.04	53.0	50.0	66.0	27.0			
	39.8	4960	1.7	35.16	52.0	50.0	66.0	27.0			
	47.7	4136	2.1	29.32	51.0	50.0	66.0	26.0			
	55.5	3559	2.4	25.23	49.0	50.0	66.0	26.0			
	62.3	3171	2.7	22.48	48.0	50.0	66.0	26.0			
	68.0	2905	2.9	20.59	48.0	50.0	66.0	25.0			
	76.2	2591	3.0	18.37	47.0	50.0	66.0	25.0			
	99.7	1981	2.6	14.04	44.0	50.0	66.0	23.0			
	111.9	1765	2.8	12.51	41.0	50.0	62.0	21.0			
	116.1	1701	2.9	12.06	40.0	50.0	62.0	21.0			
	30.6	6166	1.0	91.45	47.0	50.0	66.0	27.0	PKD 7390 180M2A	451	258-259
	35.2	5368	1.2	79.61	47.0	50.0	66.0	28.0			
	40.0	4725	1.4	70.08	45.0	50.0	66.0	25.0			
	47.9	3941	1.6	58.44	52.0	50.0	66.0	26.0			
	55.7	3391	1.8	50.29	54.0	50.0	66.0	27.0			
	62.5	3022	1.9	44.81	53.0	50.0	66.0	27.0			
	68.2	2767	2.1	41.04	53.0	50.0	66.0	27.0			
	79.6	2371	2.7	35.16	52.0	50.0	66.0	27.0			

P_1 [kW]	n_2 [Min^{-1}]	M_2 [Nm]	f_B	i_{ges}	F_R [N]	F_A [N]	$F_{R\,GR}$ [N]	$F_{A\,GR}$ [N]	Tip / Type / Typ IE2 / IE3	Kg	mm
22.0	18.7	10760	0.8	48.23	54.0	50.0	66.0	31.0	PKD 6390 200L6C / 200L6D	509	254-255
	20.9	9586	0.8	42.97	54.0	50.0	66.0	31.0			
	22.9	8779	0.9	39.35	53.0	50.0	66.0	30.0			
	26.7	7521	1.1	33.71	53.0	50.0	66.0	30.0			
	32.0	6271	1.4	28.11	51.0	50.0	66.0	29.0			
	37.2	5397	1.6	24.19	50.0	50.0	66.0	29.0			
	41.7	4810	1.8	21.56	49.0	50.0	66.0	28.0			
	45.6	4404	2.0	19.74	48.0	50.0	66.0	28.0			
	51.1	3931	2.0	17.62	47.0	50.0	66.0	27.0			
	57.1	3516	2.2	15.76	44.0	50.0	66.0	27.0			
	60.7	3309	2.3	14.83	44.0	50.0	66.0	26.0			
	67.7	2965	1.8	13.29	44.0	50.0	66.0	26.0			
	76.0	2641	1.9	11.84	43.0	50.0	66.0	25.0			
	78.8	2548	2.0	11.42	42.0	50.0	66.0	25.0			
	82.9	2421	2.1	10.85	44.0	50.0	66.0	25.0			
	93.0	2160	2.2	9.68	44.0	50.0	66.0	24.0			
	103.9	1932	2.4	8.66	44.0	50.0	66.0	23.0			
	18.3	10768	0.8	76.33	49.0	50.0	66.0	33.0	PKD 6390 180M4B / 180L4B	451	254-255
	20.8	9480	0.9	67.20	48.0	50.0	66.0	30.0			
	25.0	7904	1.0	56.03	53.0	50.0	66.0	30.0			
	29.0	6804	1.2	48.23	54.0	50.0	66.0	31.0			
	32.6	6062	1.2	42.97	54.0	50.0	66.0	31.0			
	35.6	5551	1.3	39.35	53.0	50.0	66.0	30.0			
	41.5	4755	1.7	33.71	53.0	50.0	66.0	30.0			
	49.8	3965	2.1	28.11	51.0	50.0	66.0	29.0			
	57.9	3412	2.4	24.19	50.0	50.0	66.0	29.0			
	64.9	3041	2.7	21.56	49.0	50.0	66.0	28.0			
	70.9	2785	2.9	19.74	48.0	50.0	66.0	28.0			
	79.5	2486	3.0	17.62	47.0	50.0	66.0	27.0			
	105.3	1875	2.7	13.29	44.0	50.0	66.0	26.0			
	118.2	1670	2.9	11.84	43.0	50.0	66.0	25.0			
	122.6	1611	3.0	11.42	42.0	50.0	66.0	25.0			
	31.9	5914	1.1	87.70	49.0	50.0	66.0	33.0	PKD 6390 180M2A	451	254-255
	36.7	5147	1.2	76.33	49.0	50.0	66.0	33.0			
	41.7	4531	1.4	67.20	48.0	50.0	66.0	30.0			
	50.0	3778	1.6	56.03	53.0	50.0	66.0	30.0			
	58.1	3252	1.8	48.23	54.0	50.0	66.0	31.0			
	65.2	2897	1.9	42.97	54.0	50.0	66.0	31.0			
	71.2	2653	2.1	39.35	53.0	50.0	66.0	30.0			
	83.1	2273	2.7	33.71	53.0	50.0	66.0	30.0			
	31.1	6348	0.8	45.00	23.0	45.0	38.0	20.0	PKD 5390 180M4B / 180L4B	311	246-247
	35.2	5606	0.9	39.74	21.0	44.0	38.0	18.0			
	51.2	3861	1.2	27.37	32.0	45.0	38.0	19.0			
	59.9	3298	1.3	23.38	34.0	44.0	38.0	19.0			
	62.0	3185	1.3	22.58	34.0	44.0	38.0	19.0			
	70.2	2813	1.5	19.94	35.0	44.0	38.0	19.0			
	78.0	2532	1.7	17.95	35.0	43.0	38.0	19.0			
	85.5	2309	1.9	16.37	34.0	42.0	38.0	18.0			
	103.7	1904	2.3	13.50	33.0	41.0	38.0	18.0			
	117.4	1682	2.3	11.92	32.0	40.0	38.0	17.0			
	130.4	1515	1.9	10.74	32.0	39.0	38.0	17.0			
	139.0	1421	2.0	10.07	31.0	39.0	38.0	17.0			
	148.0	1334	1.9	9.46	31.0	39.0	38.0	17.0			
	172.2	1147	2.3	8.13	30.0	38.0	38.0	16.0			
	51.3	3678	1.0	54.55	23.0	45.0	38.0	22.0	PKD 5390 180M2A	311	246-247
	62.2	3034	1.2	45.00	23.0	45.0	38.0	22.0			
	70.5	2680	1.4	39.74	21.0	44.0	38.0	18.0			
	102.3	1846	1.9	27.37	32.0	45.0	38.0	19.0			
	119.8	1577	2.1	23.38	34.0	44.0	38.0	19.0			
	124.0	1523	2.1	22.58	34.0	44.0	38.0	19.0			
	140.4	1345	2.4	19.94	35.0	44.0	38.0	19.0			
	156.0	1210	2.7	17.95	35.0	43.0	38.0	19.0			
	171.0	1104	3.0	16.37	34.0	42.0	38.0	18.0			
	260.7	724	3.0	10.74	32.0	39.0	38.0	17.0			

P_1 [kW]	n_2 [Min^{-1}]	M_2 [Nm]	f_B	i_{ges}	F_R [N]	F_A [N]	$F_{R\,GR}$ [N]	$F_{A\,GR}$ [N]	Tip / Type / Typ IE2 / IE3	Kg	mm
30.0	3.9	68924	0.8	233.51	-	-	-	-	PKD G 9390/62 225M6B / 225M6C	2038	282
	4.3	61675	0.9	208.95	-	-	-	-			
	4.4	59070	0.8	320.72	-	-	-	-	PKD G 9390/62 200L4C / 200L4D	1965	282
	4.7	54732	0.9	297.17	-	-	-	-			
	5.2	49745	1.0	270.09	-	-	-	-			
	6.0	43008	1.2	233.51	-	-	-	-			
	6.7	38484	1.3	208.95	-	-	-	-			
	5.2	46095	0.8	538.33	-	-	-	-	PKD G 9390/62 200L2B / 200L2C	1965	282
	5.9	40605	0.9	474.22	-	-	-	-			
	6.5	36905	1.0	431.00	-	-	-	-			
	7.5	31763	1.2	370.95	-	-	-	-			
	8.7	27462	1.4	320.72	-	-	-	-			
	9.4	25445	1.5	297.17	-	-	-	-			
	10.4	23127	1.6	270.09	-	-	-	-			
	12.0	19994	1.9	233.51	-	-	-	-			
	13.4	17891	2.1	208.95	-	-	-	-			
	4.5	61018	0.9	200.57	220.0	100.0	-	-	PKD G 9390 225M6B / 225M6C	1907	274-275
	5.2	52755	1.0	173.41	220.0	100.0	-	-			
	5.8	46938	1.1	154.29	220.0	100.0	-	-			
	6.7	40623	1.3	133.53	220.0	100.0	-	-			
	7.6	35953	1.5	118.18	220.0	100.0	-	-			
	8.8	31085	1.7	102.18	220.0	100.0	-	-			
	10.0	27258	1.9	89.60	220.0	100.0	-	-			
	11.1	24773	2.1	81.43	220.0	100.0	-	-			
	12.8	21420	2.5	70.41	220.0	100.0	-	-			
	13.8	19796	2.7	65.07	220.0	100.0	-	-			
	7.0	38583	1.3	200.57	220.0	100.0	-	-	PKD G 9390 200L4C / 200L4D	1834	274-275
	8.1	33358	1.5	173.41	220.0	100.0	-	-			
	9.1	29680	1.7	154.29	220.0	100.0	-	-			
	10.5	25686	1.9	133.53	220.0	100.0	-	-			
	11.8	22734	2.2	118.18	220.0	100.0	-	-			
	13.7	19656	2.5	102.18	220.0	100.0	-	-			
	15.6	17236	2.9	89.60	220.0	100.0	-	-			
	14.0	18442	2.1	200.57	220.0	100.0	-	-	PKD G 9390 200L2B / 200L2C	1834	274-275
	16.1	15945	2.4	173.41	220.0	100.0	-	-			
	18.1	14187	2.7	154.29	220.0	100.0	-	-			
	7.5	36580	0.9	120.24	139.0	70.0	160.0	70.0	PKD 9390 225M6B / 225M6C	1662	270-271
	8.8	31143	1.1	102.37	145.0	70.0	160.0	70.0			
	9.8	27906	1.2	91.73	148.0	70.0	160.0	70.0			
	11.3	24335	1.4	79.99	150.0	70.0	160.0	70.0			
	13.0	21000	1.6	69.03	153.0	70.0	160.0	70.0			
	15.3	17861	1.9	58.71	154.0	70.0	160.0	70.0			
	18.1	15135	2.2	49.75	128.0	70.0	160.0	70.0			
	22.1	12403	2.7	40.77	128.0	70.0	160.0	70.0			
	23.0	11907	2.8	39.14	128.0	70.0	160.0	70.0			
	7.1	38015	0.8	197.62	129.0	70.0	160.0	70.0	PKD 9390 200L4C / 200L4D	1589	270-271
	11.6	23130	1.4	120.24	139.0	70.0	160.0	70.0			
	13.7	19692	1.6	102.37	145.0	70.0	160.0	70.0			
	15.3	17646	1.8	91.73	148.0	70.0	160.0	70.0			
	17.5	15387	2.1	79.99	150.0	70.0	160.0	70.0			
	20.3	13279	2.4	69.03	153.0	70.0	160.0	70.0			
	23.8	11294	2.8	58.71	154.0	70.0	160.0	70.0			
	14.2	18171	1.3	197.62	129.0	70.0	160.0	70.0	PKD 9390 200L2B / 200L2C	1589	270-271
	23.3	11056	2.2	120.24	139.0	70.0	160.0	70.0			
	27.4	9413	2.6	102.37	145.0	70.0	160.0	70.0			
	30.5	8435	2.9	91.73	148.0	70.0	160.0	70.0			

P_1 [kW]	n_2 [Min^{-1}]	M_2 [Nm]	f_B	i_{ges}	F_R [N]	F_A [N]	$F_{R\,GR}$ [N]	$F_{A\,GR}$ [N]	Tip / Type / Typ IE2 / IE3	Kg	mm
30.0	9.9	27572	0.8	90.63	102.0	65.0	120.0	65.0	PKD G 8390 225M6B / 225M6C	1092	266-267
	11.5	23833	0.9	78.34	113.0	65.0	-	-			
	13.3	20559	1.0	67.58	113.0	65.0	120.0	65.0			
	15.3	17937	1.2	58.96	114.0	65.0	120.0	65.0			
	17.9	15339	1.4	50.42	111.0	65.0	120.0	65.0			
	21.3	12850	1.6	42.24	108.0	65.0	120.0	65.0			
	25.3	10809	1.7	35.53	104.0	65.0	120.0	65.0			
	30.4	8999	2.3	29.58	91.0	65.0	120.0	65.0			
	35.6	7697	2.7	25.30	91.0	65.0	120.0	65.0			
	11.0	24575	0.8	127.75	107.0	65.0	120.0	65.0	PKD G 8390 200L4C / 200L4D	1019	266-267
	15.4	17434	1.1	90.63	102.0	65.0	120.0	65.0			
	17.9	15070	1.3	78.34	-	-	-	-			
	20.7	13000	1.5	67.58	113.0	65.0	120.0	65.0			
	23.7	11342	1.8	58.96	114.0	65.0	120.0	65.0			
	27.8	9699	2.1	50.42	111.0	65.0	120.0	65.0			
	33.1	8125	2.5	42.24	108.0	65.0	120.0	65.0			
	39.4	6835	2.6	35.53	104.0	65.0	120.0	65.0			
	18.4	13964	1.1	151.87	107.0	65.0	120.0	65.0	PKD G 8390 200L2B / 200L2C	1019	266-267
	21.9	11747	1.3	127.75	107.0	65.0	120.0	65.0			
	30.9	8333	1.8	90.63	102.0	65.0	120.0	65.0			
	35.7	7203	2.1	78.34	113.0	65.0	-	-			
	41.4	6214	2.4	67.58	113.0	65.0	120.0	65.0			
	47.5	5421	2.8	58.96	114.0	65.0	120.0	65.0			
	16.9	16242	0.8	53.39	83.0	60.0	95.0	60.0	PKD 8390 225M6B / 225M6C	842	262-263
	20.1	13608	1.0	44.73	81.0	60.0	95.0	60.0			
	21.6	12659	1.1	41.61	80.0	60.0	95.0	60.0			
	25.1	10922	1.2	35.90	78.0	60.0	95.0	60.0			
	28.7	9528	1.4	31.32	76.0	60.0	95.0	60.0			
	33.6	8150	1.7	26.79	74.0	60.0	95.0	60.0			
	40.1	6827	2.0	22.44	71.0	60.0	95.0	59.0			
	44.6	6139	2.2	20.18	86.0	60.0	95.0	54.0			
	51.9	5272	2.6	17.33	86.0	60.0	95.0	56.0			
	72.9	3757	2.3	12.35	86.0	60.0	95.0	51.0			
	16.9	15957	0.8	82.95	76.0	60.0	95.0	60.0	PKD 8390 200L4C / 200L4D	769	262-263
	19.6	13766	0.9	71.56	80.0	60.0	95.0	60.0			
	22.4	12009	1.1	62.43	84.0	60.0	95.0	60.0			
	26.2	10270	1.3	53.39	83.0	60.0	95.0	60.0			
	31.3	8604	1.5	44.73	81.0	60.0	95.0	60.0			
	33.6	8004	1.6	41.61	80.0	60.0	95.0	60.0			
	39.0	6906	1.9	35.90	78.0	60.0	95.0	60.0			
	44.7	6025	2.2	31.32	76.0	60.0	95.0	60.0			
	52.3	5153	2.5	26.79	74.0	60.0	95.0	60.0			
	62.4	4317	3.0	22.44	71.0	60.0	95.0	59.0			
	24.0	10717	0.9	116.55	76.0	60.0	95.0	60.0	PKD 8390 200L2B / 200L2C	769	262-263
	29.2	8823	1.1	95.96	76.0	60.0	95.0	60.0			
	33.8	7627	1.3	82.95	76.0	60.0	95.0	60.0			
	39.1	6580	1.5	71.56	80.0	60.0	95.0	60.0			
	44.9	5740	1.7	62.43	84.0	60.0	95.0	60.0			
	52.4	4909	2.0	53.39	83.0	60.0	95.0	60.0			
	62.6	4113	2.4	44.73	81.0	60.0	95.0	60.0			
	67.3	3826	2.6	41.61	80.0	60.0	95.0	60.0			
	78.0	3301	3.0	35.90	78.0	60.0	95.0	60.0			

P_1 [kW]	n_2 [Min^{-1}]	M_2 [Nm]	f_B	i_{ges}	F_R [N]	F_A [N]	$F_{R\,GR}$ [N]	$F_{A\,GR}$ [N]	Tip / Type / Typ IE2 / IE3	Kg	mm
30.0	25.6	10696	0.8	35.16	47.0	50.0	66.0	23.0	PKD 7390 225M6B / 225M6C	582	258-259
	30.7	8920	1.0	29.32	47.0	50.0	66.0	23.0			
	35.7	7676	1.2	25.23	46.0	50.0	66.0	23.0			
	40.0	6839	1.3	22.48	45.0	50.0	66.0	23.0			
	43.7	6264	1.4	20.59	45.0	50.0	66.0	23.0			
	49.0	5589	1.5	18.37	44.0	50.0	66.0	23.0			
	54.7	5001	1.6	16.44	43.0	50.0	66.0	23.0			
	58.1	4712	1.7	15.49	43.0	50.0	65.0	22.0			
	64.1	4271	1.3	14.04	41.0	50.0	63.0	22.0			
	71.9	3806	1.4	12.51	41.0	50.0	62.0	21.0			
	74.6	3669	1.4	12.06	40.0	50.0	62.0	21.0			
	78.5	3486	1.5	11.46	40.0	50.0	61.0	21.0			
	88.1	3109	1.6	10.22	39.0	50.0	60.0	21.0			
	98.4	2784	1.8	9.15	38.0	50.0	59.0	21.0			
	24.0	11242	0.8	58.44	52.0	50.0	66.0	26.0	PKD 7390 200L4C / 200L4D	509	258-259
	27.8	9674	0.8	50.29	46.0	50.0	66.0	22.0			
	31.2	8620	0.9	44.81	47.0	50.0	66.0	22.0			
	34.1	7895	1.0	41.04	47.0	50.0	66.0	23.0			
	39.8	6764	1.3	35.16	47.0	50.0	66.0	23.0			
	47.7	5640	1.5	29.32	47.0	50.0	66.0	23.0			
	55.5	4853	1.8	25.23	46.0	50.0	66.0	23.0			
	62.3	4324	2.0	22.48	45.0	50.0	66.0	23.0			
	68.0	3961	2.1	20.59	45.0	50.0	66.0	23.0			
	76.2	3534	2.2	18.37	44.0	50.0	66.0	23.0			
	85.2	3162	2.4	16.44	43.0	50.0	66.0	23.0			
	90.4	2980	2.5	15.49	43.0	50.0	65.0	22.0			
	99.7	2701	1.9	14.04	41.0	50.0	63.0	22.0			
	111.9	2406	2.1	12.51	41.0	50.0	62.0	21.0			
	116.1	2320	2.2	12.06	40.0	50.0	62.0	21.0			
	122.2	2204	2.3	11.46	40.0	50.0	61.0	21.0			
	137.0	1966	2.4	10.22	39.0	50.0	60.0	21.0			
	153.0	1760	2.7	9.15	38.0	50.0	59.0	21.0			
	40.0	6444	1.0	70.08	52.0	50.0	66.0	25.0	PKD 7390 200L2B / 200L2C	509	258-259
	47.9	5374	1.2	58.44	52.0	50.0	66.0	26.0			
	55.7	4624	1.3	50.29	46.0	50.0	66.0	22.0			
	62.5	4120	1.4	44.81	47.0	50.0	66.0	22.0			
	68.2	3774	1.6	41.04	47.0	50.0	66.0	23.0			
	79.6	3233	2.0	35.16	47.0	50.0	66.0	23.0			
	95.5	2696	2.4	29.32	47.0	50.0	66.0	23.0			
	111.0	2320	2.8	25.23	46.0	50.0	66.0	23.0			
	26.7	10255	0.8	33.71	48.0	50.0	66.0	27.0	PKD 6390 225M6B / 225M6C	582	254-255
	32.0	8552	1.0	28.11	47.0	50.0	66.0	27.0			
	37.2	7359	1.2	24.19	46.0	50.0	66.0	26.0			
	41.7	6559	1.3	21.56	46.0	50.0	66.0	26.0			
	45.6	6005	1.4	19.74	45.0	50.0	66.0	26.0			
	51.1	5360	1.5	17.62	45.0	50.0	66.0	26.0			
	57.1	4795	1.6	15.76	44.0	50.0	66.0	25.0			
	60.7	4512	1.7	14.83	43.0	50.0	66.0	25.0			
	67.7	4043	1.3	13.29	42.0	50.0	66.0	24.0			
	76.0	3602	1.4	11.84	41.0	50.0	66.0	24.0			
	78.8	3474	1.5	11.42	41.0	50.0	66.0	24.0			
	82.9	3301	1.5	10.85	40.0	50.0	66.0	23.0			
	93.0	2945	1.6	9.68	39.0	50.0	66.0	23.0			
	103.9	2635	1.8	8.66	38.0	50.0	66.0	23.0			

P_1 [kW]	n_2 [Min^{-1}]	M_2 [Nm]	f_B	i_{ges}	F_R [N]	F_A [N]	$F_{R\,GR}$ [N]	$F_{A\,GR}$ [N]	Tip / Type / Typ IE2 / IE3	Kg	mm
30.0	25.0	10778	0.8	56.03	53.0	50.0	66.0	30.0	PKD 6390 200L4C / 200L4D	509	254-255
	29.0	9278	0.9	48.23	47.0	50.0	66.0	26.0			
	32.6	8266	0.9	42.97	47.0	50.0	66.0	26.0			
	35.6	7570	1.0	39.35	48.0	50.0	66.0	26.0			
	41.5	6485	1.3	33.71	48.0	50.0	66.0	27.0			
	49.8	5407	1.5	28.11	47.0	50.0	66.0	27.0			
	57.9	4653	1.8	24.19	46.0	50.0	66.0	26.0			
	64.9	4147	2.0	21.56	46.0	50.0	66.0	26.0			
	70.9	3797	2.2	19.74	45.0	50.0	66.0	26.0			
	79.5	3389	2.2	17.62	45.0	50.0	66.0	26.0			
	88.8	3032	2.4	15.76	44.0	50.0	66.0	25.0			
	94.4	2853	2.5	14.83	43.0	50.0	66.0	25.0			
	105.3	2557	2.0	13.29	42.0	50.0	66.0	24.0			
	118.2	2278	2.1	11.84	41.0	50.0	66.0	24.0			
	122.6	2197	2.2	11.42	41.0	50.0	66.0	24.0			
	129.0	2087	2.3	10.85	40.0	50.0	66.0	23.0			
	144.6	1862	2.4	9.68	39.0	50.0	66.0	23.0			
	161.7	1666	2.7	8.66	38.0	50.0	66.0	23.0			
	41.7	6179	1.0	67.20	53.0	50.0	66.0	30.0	PKD 6390 200L2B / 200L2C	509	254-255
	50.0	5152	1.2	56.03	53.0	50.0	66.0	30.0			
	58.1	4435	1.4	48.23	47.0	50.0	66.0	26.0			
	65.2	3951	1.4	42.97	47.0	50.0	66.0	26.0			
	71.2	3618	1.6	39.35	48.0	50.0	66.0	26.0			
	83.1	3100	2.0	33.71	48.0	50.0	66.0	27.0			
	99.6	2585	2.4	28.11	47.0	50.0	66.0	27.0			
	115.8	2224	2.8	24.19	46.0	50.0	66.0	26.0			
37.0	5.2	61352	0.8	270.09	220.0	100.0	-	-	PKD G 9390/62 225M4A / 225M4B	2038	282
	6.0	53043	0.9	233.51	220.0	100.0	-	-			
	6.7	47464	1.1	208.95	220.0	100.0	-	-			
	5.9	50080	0.8	474.22	-	-	-	-	PKD G 9390/62 200L2C / 200L2D	1965	282
	6.5	45516	0.8	431.00	-	-	-	-			
	7.5	39174	1.0	370.95	-	-	-	-			
	8.7	33870	1.1	320.72	-	-	-	-			
	9.4	31383	1.2	297.17	-	-	-	-			
	10.4	28523	1.3	270.09	-	-	-	-			
	12.0	24660	1.5	233.51	-	-	-	-			
	13.4	22066	1.7	208.95	-	-	-	-			
	7.0	47585	1.1	200.57	220.0	100.0	-	-	PKD G 9390 225M4A / 225M4B	1907	274-275
	8.1	41141	1.2	173.41	220.0	100.0	-	-			
	9.1	36605	1.4	154.29	220.0	100.0	-	-			
	10.5	31680	1.6	133.53	220.0	100.0	-	-			
	11.8	28038	1.8	118.18	220.0	100.0	-	-			
	13.7	24242	2.1	102.18	220.0	100.0	-	-			
	15.6	21258	2.4	89.60	220.0	100.0	-	-			
	17.2	19319	2.6	81.43	220.0	100.0	-	-			
	19.9	16705	3.0	70.41	220.0	100.0	-	-			
	14.0	22745	1.7	200.57	220.0	100.0	-	-	PKD G 9390 200L2C / 200L2D	1834	274-275
	16.1	19665	1.9	173.41	220.0	100.0	-	-			
	18.1	17497	2.2	154.29	220.0	100.0	-	-			
	21.0	15143	2.5	133.53	220.0	100.0	-	-			
	23.7	13402	2.8	118.18	220.0	100.0	-	-			
	11.6	28527	1.1	120.24	128.0	70.0	160.0	70.0	PKD 9390 225M4A / 225M4B	1662	270-271
	13.7	24287	1.3	102.37	137.0	70.0	160.0	70.0			
	15.3	21763	1.5	91.73	142.0	70.0	160.0	70.0			
	17.5	18978	1.7	79.99	146.0	70.0	160.0	70.0			
	20.3	16377	2.0	69.03	149.0	70.0	160.0	70.0			
	23.8	13929	2.3	58.71	152.0	70.0	160.0	70.0			
	28.1	11803	2.7	49.75	154.0	70.0	160.0	70.0			
	14.2	22411	1.1	197.62	128.0	70.0	160.0	70.0	PKD 9390 200L2C / 200L2D	1589	270-271
	23.3	13636	1.8	120.24	128.0	70.0	160.0	70.0			
	27.4	11609	2.1	102.37	137.0	70.0	160.0	70.0			
	30.5	10403	2.3	91.73	142.0	70.0	160.0	70.0			
	35.0	9071	2.7	79.99	146.0	70.0	160.0	70.0			

P_1 [kW]	n_2 [Min^{-1}]	M_2 [Nm]	f_B	i_{ges}	F_R [N]	F_A [N]	$F_{R\,GR}$ [N]	$F_{A\,GR}$ [N]	Tip / Type / Typ IE2 / IE3	Kg	mm
37.0	15.4	21502	0.9	90.63	90.0	65.0	120.0	65.0	PKD G 8390 225M4A / 225M4B	1092	266-267
	17.9	18586	1.1	78.34	-	-	-	-			
	20.7	16033	1.2	67.58	107.0	65.0	120.0	65.0			
	23.7	13988	1.4	58.96	109.0	65.0	120.0	65.0			
	27.8	11962	1.7	50.42	107.0	65.0	120.0	65.0			
	33.1	10021	2.0	42.24	104.0	65.0	120.0	65.0			
	39.4	8429	2.1	35.53	100.0	65.0	120.0	65.0			
	47.3	7018	2.8	29.58	97.0	65.0	120.0	65.0			
	18.4	17223	0.9	151.87	90.0	65.0	-	-	PKD G 8390 200L2C / 200L2D	1019	266-267
	21.9	14487	1.0	127.75	90.0	65.0	-	-			
	30.9	10278	1.5	90.63	90.0	65.0	120.0	65.0			
	35.7	8884	1.7	78.34	107.0	65.0	-	-			
	41.4	7664	2.0	67.58	107.0	65.0	120.0	65.0			
	47.5	6686	2.3	58.96	109.0	65.0	120.0	65.0			
	55.5	5718	2.7	50.42	107.0	65.0	120.0	65.0			
	19.6	16978	0.8	71.56	73.0	60.0	95.0	60.0	PKD 8390 225M4A / 225M4B	842	262-263
	22.4	14811	0.9	62.43	78.0	60.0	95.0	60.0			
	26.2	12667	1.0	53.39	78.0	60.0	95.0	60.0			
	31.3	10612	1.2	44.73	77.0	60.0	95.0	60.0			
	33.6	9872	1.3	41.61	76.0	60.0	95.0	60.0			
	39.0	8517	1.5	35.90	75.0	60.0	95.0	60.0			
	44.7	7431	1.7	31.32	73.0	60.0	95.0	60.0			
	52.3	6356	2.0	26.79	71.0	60.0	95.0	59.0			
	62.4	5324	2.4	22.44	69.0	60.0	95.0	57.0			
	69.4	4788	2.7	20.18	-	-	-	-			
	113.4	2930	2.9	12.35	60.0	60.0	95.0	50.0			
	29.2	10882	0.9	95.96	73.0	60.0	95.0	60.0	PKD 8390 200L2C / 200L2D	769	262-263
	33.8	9407	1.1	82.95	73.0	60.0	95.0	60.0			
	39.1	8115	1.2	71.56	73.0	60.0	95.0	60.0			
	44.9	7080	1.4	62.43	78.0	60.0	95.0	60.0			
	52.4	6055	1.6	53.39	78.0	60.0	95.0	60.0			
	62.6	5073	1.9	44.73	77.0	60.0	95.0	60.0			
	67.3	4719	2.1	41.61	76.0	60.0	95.0	60.0			
	78.0	4071	2.4	35.90	75.0	60.0	95.0	60.0			
	89.4	3552	2.8	31.32	73.0	60.0	95.0	60.0			
	34.1	9737	0.8	41.04	42.0	50.0	58.0	19.0	PKD 7390 225M4A / 225M4B	582	258-259
	39.8	8342	1.0	35.16	43.0	50.0	61.0	20.0			
	47.7	6956	1.2	29.32	43.0	50.0	62.0	21.0			
	55.5	5986	1.4	25.23	43.0	50.0	63.0	21.0			
	62.3	5333	1.6	22.48	43.0	50.0	63.0	21.0			
	68.0	4885	1.7	20.59	42.0	50.0	63.0	21.0			
	76.2	4358	1.8	18.37	42.0	50.0	63.0	21.0			
	85.2	3900	1.9	16.44	41.0	50.0	62.0	21.0			
	90.4	3675	2.0	15.49	41.0	50.0	61.0	21.0			
	99.7	3331	1.6	14.04	40.0	50.0	59.0	20.0			
	111.9	2968	1.7	12.51	39.0	50.0	59.0	20.0			
	116.1	2861	1.7	12.06	39.0	50.0	58.0	20.0			
	122.2	2719	1.8	11.46	38.0	50.0	58.0	20.0			
	137.0	2425	1.9	10.22	38.0	50.0	57.0	20.0			
	153.0	2171	2.2	9.15	37.0	50.0	57.0	19.0			
	40.0	7947	0.8	70.08	42.0	50.0	66.0	25.0	PKD 7390 200L2C / 200L2D	509	258-259
	47.9	6627	1.0	58.44	42.0	50.0	66.0	26.0			
	55.7	5703	1.1	50.29	42.0	50.0	66.0	22.0			
	62.5	5082	1.2	44.81	42.0	50.0	66.0	22.0			
	68.2	4654	1.3	41.04	42.0	50.0	58.0	19.0			
	79.6	3987	1.6	35.16	43.0	50.0	61.0	20.0			
	95.5	3325	1.9	29.32	43.0	50.0	62.0	21.0			
	111.0	2861	2.3	25.23	43.0	50.0	63.0	21.0			
	124.6	2549	2.5	22.48	43.0	50.0	63.0	21.0			
	136.0	2335	2.8	20.59	42.0	50.0	63.0	21.0			
	152.4	2083	2.8	18.37	42.0	50.0	63.0	21.0			
	199.4	1592	2.5	14.04	40.0	50.0	59.0	20.0			
	223.8	1419	2.7	12.51	39.0	50.0	59.0	20.0			
	232.2	1368	2.8	12.06	39.0	50.0	58.0	20.0			
	244.3	1300	2.9	11.46	38.0	50.0	58.0	20.0			

P_1 [kW]	n_2 [Min^{-1}]	M_2 [Nm]	f_B	i_{ges}	F_R [N]	F_A [N]	$F_{R\,GR}$ [N]	$F_{A\,GR}$ [N]	Tip / Type / Typ IE2 / IE3	Kg	mm
37.0	35.6	9336	0.8	39.35	42.0	50.0	66.0	23.0	PKD 6390 225M4A / 225M4B	582	254-255
	41.5	7998	1.0	33.71	43.0	50.0	66.0	24.0			
	49.8	6669	1.2	28.11	43.0	50.0	66.0	24.0			
	57.9	5739	1.4	24.19	43.0	50.0	66.0	24.0			
	64.9	5115	1.6	21.56	43.0	50.0	66.0	24.0			
	70.9	4683	1.8	19.74	43.0	50.0	66.0	24.0			
	79.5	4180	1.8	17.62	42.0	50.0	66.0	24.0			
	88.8	3739	1.9	15.76	42.0	50.0	66.0	24.0			
	94.4	3518	2.0	14.83	41.0	50.0	66.0	24.0			
	105.3	3153	1.6	13.29	40.0	49.0	66.0	23.0			
	118.2	2809	1.7	11.84	39.0	48.0	66.0	23.0			
	122.6	2709	1.8	11.42	39.0	48.0	66.0	22.0			
	129.0	2574	1.9	10.85	39.0	47.0	66.0	22.0			
	144.6	2297	2.0	9.68	38.0	47.0	66.0	22.0			
	161.7	2055	2.2	8.66	37.0	46.0	65.0	22.0			
	41.7	7621	0.8	67.20	42.0	50.0	66.0	30.0	PKD 6390 200L2C / 200L2D	509	254-255
	50.0	6354	1.0	56.03	42.0	50.0	66.0	30.0			
	58.1	5469	1.1	48.23	42.0	50.0	66.0	26.0			
	65.2	4873	1.2	42.97	42.0	50.0	66.0	26.0			
	71.2	4462	1.3	39.35	42.0	50.0	66.0	23.0			
	83.1	3823	1.6	33.71	43.0	50.0	66.0	24.0			
	99.6	3188	2.0	28.11	43.0	50.0	66.0	24.0			
	115.8	2743	2.3	24.19	43.0	50.0	66.0	24.0			
	129.9	2445	2.5	21.56	43.0	50.0	66.0	24.0			
	141.8	2239	2.8	19.74	43.0	50.0	66.0	24.0			
	158.9	1998	2.9	17.62	42.0	50.0	66.0	24.0			
	210.7	1507	2.5	13.29	40.0	49.0	66.0	23.0			
	236.5	1343	2.7	11.84	39.0	48.0	66.0	23.0			
	245.2	1295	2.8	11.42	39.0	48.0	66.0	22.0			
	258.1	1230	3.0	10.85	39.0	47.0	66.0	22.0			
45.0	6.0	64511	0.8	233.51	220.0	100.0	-	-	PKD G 9390/62 225M4B / 225M4C	2038	282
	6.7	57726	0.9	208.95	220.0	100.0	-	-			
	7.5	47644	0.8	370.95	-	-	-	-	PKD G 9390/62 225M2B	2038	282
	8.7	41193	0.9	320.72	-	-	-	-			
	9.4	38168	1.0	297.17	-	-	-	-			
	10.4	34690	1.1	270.09	-	-	-	-			
	12.0	29992	1.3	233.51	-	-	-	-			
	13.4	26837	1.4	208.95	-	-	-	-			
	7.0	57874	0.9	200.57	220.0	100.0	-	-	PKD G 9390 225M4B / 225M4C	1907	274-275
	8.1	50037	1.0	173.41	220.0	100.0	-	-			
	9.1	44520	1.1	154.29	220.0	100.0	-	-			
	10.5	38530	1.3	133.53	220.0	100.0	-	-			
	11.8	34100	1.5	118.18	220.0	100.0	-	-			
	13.7	29484	1.7	102.18	220.0	100.0	-	-			
	15.6	25854	1.9	89.60	220.0	100.0	-	-			
	17.2	23496	2.1	81.43	220.0	100.0	-	-			
	19.9	20317	2.5	70.41	220.0	100.0	-	-			
	21.5	18776	2.7	65.07	-	-	-	-			
	14.0	27663	1.4	200.57	220.0	100.0	-	-	PKD G 9390 225M2B	1907	274-275
	16.1	23917	1.6	173.41	220.0	100.0	-	-			
	18.1	21280	1.8	154.29	220.0	100.0	-	-			
	21.0	18417	2.1	133.53	220.0	100.0	-	-			
	23.7	16300	2.3	118.18	220.0	100.0	-	-			
	27.4	14093	2.7	102.18	220.0	100.0	-	-			
	11.6	34695	0.9	120.34	128.0	70.0	160.0	70.0	PKD 9390 225M4B / 225M4C	1662	270-271
	13.7	29538	1.1	102.37	125.0	70.0	160.0	70.0			
	15.3	26468	1.2	91.73	134.0	70.0	160.0	70.0			
	17.5	23081	1.4	79.99	139.0	70.0	160.0	70.0			
	20.3	19918	1.6	69.03	145.0	70.0	160.0	70.0			
	23.8	16941	1.9	58.71	149.0	70.0	160.0	70.0			
	28.1	14355	2.2	49.75	152.0	70.0	160.0	70.0			
	34.3	11764	2.7	40.77	154.0	70.0	160.0	70.0			
	35.8	11294	2.8	39.14	155.0	70.0	160.0	70.0			

P_1 [kW]	n_2 [Min^{-1}]	M_2 [Nm]	f_B	i_{ges}	F_R [N]	F_A [N]	$F_{R\,GR}$ [N]	$F_{A\,GR}$ [N]	Tip / Type / Typ IE2 / IE3	Kg	mm
45.0	23.3	16584	1.5	120.24	128.0	70.0	160.0	70.0	PKD 9390 225M2B	1662	270-271
	27.4	14119	1.7	102.37	125.0	70.0	160.0	70.0			
	30.5	12652	1.9	91.73	134.0	70.0	160.0	70.0			
	35.0	11033	2.2	79.99	139.0	70.0	160.0	70.0			
	40.6	9521	2.6	69.03	145.0	70.0	160.0	70.0			
	47.7	8098	3.0	58.71	149.0	70.0	160.0	70.0			
	15.4	26151	0.8	90.63	90.0	65.0	120.0	65.0	PKD G 8390 225M4B / 225M4C	1092	266-267
	17.9	22605	0.9	78.34	-	-	-	-			
	20.7	19500	1.0	67.58	98.0	65.0	120.0	65.0			
	23.7	17013	1.2	58.96	103.0	65.0	120.0	65.0			
	27.8	14549	1.4	50.42	102.0	65.0	120.0	65.0			
	33.1	12188	1.6	42.24	100.0	65.0	120.0	65.0			
	39.4	10252	1.8	35.53	97.0	65.0	120.0	65.0			
	47.3	8535	2.3	29.58	94.0	65.0	120.0	65.0			
	55.3	7300	2.7	25.30	92.0	65.0	120.0	65.0			
	30.9	12500	1.2	90.63	90.0	65.0	120.0	65.0	PKD G 8390 225M2B	1092	266-267
	35.7	10805	1.4	78.34	98.0	65.0	120.0	65.0			
	41.4	9321	1.6	67.58	98.0	65.0	120.0	65.0			
	47.5	8132	1.9	58.96	103.0	65.0	120.0	65.0			
	55.5	6954	2.2	50.42	102.0	65.0	120.0	65.0			
	66.3	5826	2.6	42.24	100.0	65.0	120.0	65.0			
	78.8	4900	2.8	35.53	97.0	65.0	120.0	65.0			
	26.2	15405	0.8	53.39	72.0	60.0	95.0	60.0	PKD 8390 225M4B / 225M4C	842	262-263
	31.3	12907	1.0	44.73	72.0	60.0	95.0	60.0			
	33.6	12006	1.1	41.61	72.0	60.0	95.0	60.0			
	39.0	10359	1.3	35.90	71.0	60.0	95.0	59.0			
	44.7	9037	1.4	31.32	70.0	60.0	95.0	58.0			
	52.3	7730	1.7	26.79	69.0	60.0	95.0	57.0			
	62.4	6475	2.0	22.44	67.0	60.0	95.0	55.0			
	69.4	5823	2.2	20.18	66.0	60.0	95.0	54.0			
	80.8	5001	2.6	17.33	64.0	60.0	95.0	53.0			
	113.4	3564	2.4	12.35	59.0	60.0	95.0	49.0			
	33.8	11441	0.9	82.95	72.0	60.0	95.0	60.0	PKD 8390 225M2B	842	262-263
	39.1	9870	1.0	71.56	72.0	60.0	95.0	60.0			
	44.9	8611	1.1	62.43	72.0	60.0	95.0	60.0			
	52.4	7364	1.3	53.39	72.0	60.0	95.0	60.0			
	62.6	6169	1.6	44.73	72.0	60.0	95.0	60.0			
	67.3	5739	1.7	41.61	72.0	60.0	95.0	60.0			
	78.0	4951	2.0	35.90	71.0	60.0	95.0	59.0			
	89.4	4320	2.3	31.32	70.0	60.0	95.0	58.0			
	104.5	3695	2.7	26.79	69.0	60.0	95.0	57.0			
	39.8	10145	0.8	35.16	43.0	50.0	61.0	20.0	PKD 7390 225M4B / 225M4C	582	258-259
	47.7	8460	1.0	29.32	39.0	50.0	55.0	18.0			
	55.5	7280	1.2	25.23	39.0	50.0	56.0	19.0			
	62.3	6487	1.3	22.48	40.0	50.0	57.0	19.0			
	68.0	5941	1.4	20.59	40.0	50.0	57.0	19.0			
	76.2	5301	1.5	18.37	39.0	50.0	58.0	20.0			
	85.2	4744	1.6	16.44	39.0	50.0	58.0	20.0			
	90.4	4470	1.7	15.49	39.0	50.0	57.0	19.0			
	99.7	4051	1.3	14.04	37.0	50.0	55.0	19.0			
	111.9	3610	1.4	12.51	37.0	50.0	55.0	19.0			
	116.1	3480	1.4	12.06	37.0	50.0	55.0	19.0			
	122.2	3307	1.5	11.46	37.0	49.0	55.0	19.0			
	137.0	2949	1.6	10.22	36.0	49.0	54.0	19.0			
	153.0	2640	1.8	9.15	36.0	48.0	54.0	18.0			

P_1 [kW]	n_2 [Min^{-1}]	M_2 [Nm]	f_B	i_{ges}	F_R [N]	F_A [N]	$F_{R\,GR}$ [N]	$F_{A\,GR}$ [N]	Tip / Type / Typ IE2 / IE3	Kg	mm
45.0	47.9	8060	0.8	58.44	43.0	50.0	-	-	PKD 7390 225M2B	582	258-259
	55.7	6936	0.9	50.29	43.0	50.0	66.0	22.0			
	62.5	6180	0.9	44.81	43.0	50.0	66.0	22.0			
	68.2	5660	1.0	41.04	43.0	50.0	58.0	19.0			
	79.6	4849	1.3	35.16	43.0	50.0	61.0	20.0			
	95.5	4044	1.6	29.32	39.0	50.0	55.0	18.0			
	111.0	3480	1.9	25.23	39.0	50.0	56.0	19.0			
	124.6	3101	2.1	22.48	40.0	50.0	57.0	19.0			
	136.0	2840	2.3	20.59	40.0	50.0	57.0	19.0			
	152.4	2534	2.3	18.37	39.0	50.0	58.0	20.0			
	170.3	2267	2.5	16.44	39.0	50.0	58.0	20.0			
	180.8	2136	2.7	15.49	39.0	50.0	57.0	19.0			
	199.4	1936	2.0	14.04	37.0	50.0	55.0	19.0			
	223.8	1725	2.2	12.51	37.0	50.0	55.0	19.0			
	232.2	1663	2.3	12.06	37.0	50.0	55.0	19.0			
	244.3	1581	2.4	11.46	37.0	49.0	55.0	19.0			
	274.0	1410	2.5	10.22	36.0	49.0	54.0	19.0			
	306.0	1262	2.8	9.15	36.0	48.0	54.0	18.0			
	41.5	9727	0.8	33.71	43.0	50.0	66.0	24.0	PKD 6390 225M4B / 225M4C	582	254-255
	49.8	8111	1.0	28.11	39.0	47.0	66.0	21.0			
	57.9	6980	1.2	24.19	40.0	48.0	66.0	22.0			
	64.9	6221	1.3	21.56	40.0	48.0	66.0	22.0			
	70.9	5696	1.4	19.74	40.0	48.0	66.0	22.0			
	79.5	5084	1.5	17.62	40.0	48.0	66.0	22.0			
	88.8	4547	1.6	15.76	40.0	48.0	66.0	22.0			
	94.4	4279	1.7	14.83	39.0	47.0	66.0	22.0			
	105.3	3835	1.3	13.29	38.0	46.0	66.0	21.0			
	118.2	3416	1.4	11.84	37.0	45.0	65.0	21.0			
	122.6	3295	1.5	11.42	37.0	45.0	65.0	21.0			
	129.0	3131	1.5	10.85	37.0	45.0	65.0	21.0			
	144.6	2793	1.6	9.68	36.0	44.0	64.0	21.0			
	161.7	2499	1.8	8.66	36.0	44.0	63.0	21.0			
	50.0	7728	0.8	56.03	43.0	50.0	-	-	PKD 6390 225M2B	582	254-255
	58.1	6652	0.9	48.23	43.0	50.0	66.0	26.0			
	65.2	5927	0.9	42.97	43.0	50.0	66.0	26.0			
	71.2	5427	1.0	39.35	43.0	50.0	66.0	23.0			
	83.1	4649	1.3	33.71	43.0	50.0	66.0	24.0			
	99.6	3877	1.6	28.11	39.0	47.0	66.0	21.0			
	115.8	3336	1.9	24.19	40.0	48.0	66.0	22.0			
	129.9	2974	2.1	21.56	40.0	48.0	66.0	22.0			
	141.8	2723	2.3	19.74	40.0	48.0	66.0	22.0			
	158.9	2430	2.3	17.62	40.0	48.0	66.0	22.0			
	177.7	2174	2.5	15.76	40.0	48.0	66.0	22.0			
	188.8	2045	2.7	14.83	39.0	47.0	66.0	22.0			
	210.7	1833	2.1	13.29	38.0	46.0	66.0	21.0			
	236.5	1633	2.2	11.84	37.0	45.0	65.0	21.0			
	245.2	1575	2.3	11.42	37.0	45.0	65.0	21.0			
	258.1	1496	2.4	10.85	37.0	45.0	65.0	21.0			
	289.3	1335	2.6	9.68	36.0	44.0	64.0	21.0			
	323.3	1194	2.9	8.66	36.0	44.0	63.0	21.0			
55.0	9.1	54413	0.9	154.29	220.0	100.0	-	-	PKD G 9390 250M4A / 250M4B	2080	274-275
	10.5	47092	1.1	133.53	220.0	100.0	-	-			
	11.8	41678	1.2	118.18	220.0	100.0	-	-			
	13.7	36036	1.4	102.18	220.0	100.0	-	-			
	15.6	31599	1.6	89.60	220.0	100.0	-	-			
	17.2	28718	1.7	81.43	220.0	100.0	-	-			
	19.9	24831	2.0	70.41	220.0	100.0	-	-			
	21.5	22948	2.2	65.07	-	-	-	-			
	24.9	19841	2.5	56.26	-	-	-	-			
	29.3	16854	3.0	47.79	210.9	100.0	-	-			
	18.1	26009	1.5	154.29	220.0	100.0	-	-	PKD G 9390 250M2A	2080	274-275
	21.0	22510	1.7	133.53	220.0	100.0	-	-			
	23.7	19922	1.9	118.18	220.0	100.0	-	-			
	27.4	17225	2.2	102.18	220.0	100.0	-	-			
	31.3	15104	2.5	89.60	220.0	100.0	-	-			
	34.4	13727	2.8	81.43	220.0	100.0	-	-			

P_1 [kW]	n_2 [Min^{-1}]	M_2 [Nm]	f_B	i_{ges}	F_R [N]	F_A [N]	$F_{R\,GR}$ [N]	$F_{A\,GR}$ [N]	Tip / Type / Typ IE2 / IE3	Kg	mm
55.0	13.7	36103	0.9	102.37	104.0	70.0	160.0	70.0	PKD 9390 250M4A / 250M4B	1835	270-271
	15.3	32350	1.0	91.73	119.0	70.0	160.0	70.0			
	17.5	28210	1.1	79.99	132.0	70.0	160.0	70.0			
	20.3	24345	1.3	69.03	137.0	70.0	160.0	70.0			
	23.8	20705	1.5	58.71	144.0	70.0	160.0	70.0			
	28.1	17545	1.8	49.75	149.0	70.0	160.0	70.0			
	34.3	14378	2.2	40.77	152.0	70.0	160.0	70.0			
	35.8	13803	2.3	39.14	152.0	70.0	160.0	70.0			
	41.0	12037	2.7	34.13	154.0	70.0	160.0	70.0			
	27.4	17257	1.4	102.37	104.0	70.0	160.0	70.0	PKD 9390 250M2A	1835	270-271
	30.5	15463	1.6	91.73	119.0	70.0	160.0	70.0			
	35.0	13484	1.8	79.99	132.0	70.0	160.0	70.0			
	40.6	11637	2.1	69.03	137.0	70.0	160.0	70.0			
	47.7	9897	2.5	58.71	144.0	70.0	160.0	70.0			
	56.3	8387	2.9	49.75	149.0	70.0	160.0	70.0			
	20.7	23833	0.8	67.58	83.0	65.0	120.0	65.0	PKD G 8390 250M4A / 250M4B	1265	266-267
	23.7	20793	1.0	58.96	94.0	65.0	120.0	65.0			
	27.8	17782	1.1	50.42	95.0	65.0	120.0	65.0			
	33.1	14897	1.3	42.24	94.0	65.0	120.0	65.0			
	39.4	12530	1.4	35.53	92.0	65.0	120.0	65.0			
	47.3	10432	1.9	29.58	90.0	65.0	120.0	65.0			
	55.3	8922	2.2	25.30	88.0	65.0	120.0	65.0			
	66.1	7473	2.7	21.19	86.0	65.0	120.0	63.0			
	78.5	6288	3.0	17.83	82.0	65.0	120.0	61.0			
	94.9	5202	2.9	14.75	78.0	65.0	120.0	58.0			
	35.7	13206	1.2	78.34	83.0	65.0	-	-	PKD G 8390 250M2A	1265	266-267
	41.4	11392	1.3	67.58	83.0	65.0	120.0	65.0			
	47.5	9939	1.5	58.96	94.0	65.0	120.0	65.0			
	55.5	8499	1.8	50.42	95.0	65.0	120.0	65.0			
	66.3	7121	2.1	42.24	94.0	65.0	120.0	65.0			
	78.8	5989	2.3	35.53	92.0	65.0	120.0	65.0			
	94.7	4986	3.0	29.58	90.0	65.0	120.0	65.0			
	31.3	15775	0.8	44.73	66.0	60.0	95.0	55.0	PKD 8390 250M4A / 250M4B	1015	262-263
	33.6	14675	0.9	41.61	66.0	60.0	95.0	55.0			
	39.0	12661	1.0	35.90	66.0	60.0	95.0	55.0			
	44.7	11046	1.2	31.32	66.0	60.0	95.0	55.0			
	52.3	9448	1.4	26.79	65.0	60.0	95.0	54.0			
	62.4	7914	1.6	22.44	64.0	60.0	95.0	53.0			
	69.4	7117	1.8	20.18	63.0	60.0	95.0	52.0			
	80.8	6112	2.1	17.33	61.0	60.0	95.0	51.0			
	95.6	5163	2.5	14.64	60.0	60.0	95.0	49.0			
	113.4	4355	1.9	12.35	57.0	60.0	95.0	47.0			
	173.9	2839	2.5	8.05	52.0	60.0	95.0	43.0			
	39.1	12063	0.8	71.56	73.0	60.0	95.0	60.0	PKD 8390 250M2A	1015	262-263
	44.9	10524	0.9	62.43	78.0	60.0	95.0	60.0			
	52.4	9000	1.1	53.39	72.0	60.0	95.0	60.0			
	62.6	7540	1.3	44.73	66.0	60.0	95.0	55.0			
	67.3	7014	1.4	41.61	66.0	60.0	95.0	55.0			
	78.0	6052	1.6	35.90	66.0	60.0	95.0	55.0			
	89.4	5280	1.9	31.32	66.0	60.0	95.0	55.0			
	104.5	4516	2.2	26.79	65.0	60.0	95.0	54.0			
	124.8	3783	2.6	22.44	64.0	60.0	95.0	53.0			
	138.8	3402	2.9	20.18	63.0	60.0	95.0	52.0			
75.0	10.5	64216	0.8	133.53	220.0	100.0	-	-	PKD G 9390 280M4B / 280M4C	2280	274-275
	11.8	56834	0.9	118.18	220.0	100.0	-	-			
	13.7	49139	1.0	102.18	220.0	100.0	-	-			
	15.6	43090	1.2	89.60	220.0	100.0	-	-			
	17.2	39161	1.3	81.43	220.0	100.0	-	-			
	19.9	33861	1.5	70.41	216.8	100.0	-	-			
	21.5	31293	1.6	65.07	214.5	100.0	-	-			
	24.9	27056	1.8	56.26	208.7	100.0	-	-			
	29.3	22983	2.2	47.79	202.7	100.0	-	-			
	33.9	19871	2.5	41.32	196.5	100.0	-	-			
	38.6	17428	2.9	36.24	191.5	100.0	-	-			

P_1 [kW]	n_2 [Min^{-1}]	M_2 [Nm]	f_B	i_{ges}	F_R [N]	F_A [N]	$F_{R\,GR}$ [N]	$F_{A\,GR}$ [N]	Tip / Type / Typ IE2 / IE3	Kg	mm
75.0	18.1	35467	1.1	154.29	220.0	100.0	-	-	PKD G 9390 280M2B / 280M2C	2280	274-275
	21.0	30695	1.2	133.53	220.0	100.0	-	-			
	23.7	27166	1.4	118.18	220.0	100.0	-	-			
	27.4	23488	1.6	102.18	220.0	100.0	-	-			
	31.3	20597	1.8	89.60	220.0	100.0	-	-			
	34.4	18719	2.0	81.43	220.0	100.0	-	-			
	39.8	16185	2.3	70.41	216.8	100.0	-	-			
	43.0	14958	2.5	65.07	214.5	100.0	-	-			
	49.8	12933	2.9	56.26	208.7	100.0	-	-			
	17.5	38468	0.8	79.99	104.0	70.0	160.0	70.0	PKD 9390 280M4B / 280M4C	2035	270-271
	20.3	33197	1.0	69.03	120.0	70.0	160.0	70.0			
	23.8	28234	1.1	58.71	130.0	70.0	160.0	70.0			
	28.1	23925	1.3	49.75	139.0	70.0	160.0	70.0			
	34.3	19607	1.6	40.77	146.0	70.0	160.0	70.0			
	35.8	18823	1.7	39.14	147.0	70.0	160.0	70.0			
	41.0	16413	1.9	34.13	150.0	70.0	160.0	70.0			
	47.7	14115	2.3	29.35	152.0	70.0	160.0	70.0			
	56.1	12004	2.7	24.96	154.0	70.0	160.0	70.0			
	81.0	8315	2.5	17.29	156.0	70.0	160.0	70.0			
	98.8	6815	2.8	14.17	157.0	70.0	160.0	70.0			
	30.5	21086	1.2	91.73	119.0	70.0	160.0	70.0	PKD 9390 280M2B / 280M2C	2035	270-271
	35.0	18388	1.3	79.99	104.0	70.0	160.0	70.0			
	40.6	15868	1.5	69.03	120.0	70.0	160.0	70.0			
	47.7	13496	1.8	58.71	130.0	70.0	160.0	70.0			
	56.3	11436	2.1	49.75	139.0	70.0	160.0	70.0			
	68.7	9372	2.6	40.77	146.0	70.0	160.0	70.0			
	71.5	8997	2.7	39.14	147.0	70.0	160.0	70.0			
	27.8	24248	0.8	50.42	82.0	65.0	120.0	61.0	PKD G 8390 280M4B / 280M4C	1465	266-267
	33.1	20314	1.0	42.24	84.0	65.0	120.0	62.0			
	39.4	17087	1.1	35.53	82.0	65.0	120.0	61.0			
	47.3	14225	1.4	29.58	83.0	65.0	120.0	62.0			
	55.3	12167	1.6	25.30	82.0	65.0	120.0	61.0			
	66.1	10190	2.0	21.19	80.0	65.0	120.0	59.0			
	78.5	8575	2.2	17.83	78.0	65.0	120.0	58.0			
	85.5	7873	2.4	16.37	77.0	65.0	120.0	57.0			
	94.9	7093	2.1	14.75	75.0	65.0	120.0	55.0			
	113.3	5944	2.4	12.36	72.0	65.0	120.0	54.0			
	120.4	5593	3.0	11.63	72.0	65.0	120.0	54.0			
	146.8	4588	2.8	9.54	69.0	65.0	120.0	51.0			
	35.7	18008	0.8	78.34	82.0	65.0	-	-	PKD G 8390 280M2B / 280M2C	1465	266-267
	41.4	15535	1.0	67.58	82.0	65.0	120.0	65.0			
	47.5	13553	1.1	58.96	82.0	65.0	120.0	65.0			
	55.5	11590	1.3	50.42	82.0	65.0	120.0	61.0			
	66.3	9710	1.6	42.24	84.0	65.0	120.0	62.0			
	78.8	8167	1.7	35.53	82.0	65.0	120.0	61.0			
	94.7	6800	2.2	29.58	83.0	65.0	120.0	62.0			
	110.7	5816	2.6	25.30	82.0	65.0	120.0	61.0			
	39.0	17265	0.8	35.90	66.0	60.0	95.0	55.0	PKD 8390 280M4B / 280M4C	1215	262-263
	44.7	15062	0.9	31.32	57.0	60.0	95.0	48.0			
	52.3	12884	1.0	26.79	58.0	60.0	95.0	48.0			
	62.4	10792	1.2	22.44	58.0	60.0	95.0	48.0			
	69.4	9705	1.3	20.18	57.0	60.0	95.0	48.0			
	80.8	8334	1.6	17.33	57.0	60.0	95.0	47.0			
	95.6	7041	1.8	14.64	56.0	60.0	95.0	46.0			
	113.4	5939	1.4	12.35	53.0	60.0	95.0	44.0			
	173.9	3871	1.9	8.05	50.0	60.0	95.0	41.0			
	52.4	12273	0.8	53.39	66.0	60.0	95.0	60.0	PKD 8390 280M2B / 280M2C	1215	262-263
	62.6	10282	1.0	44.73	66.0	60.0	95.0	55.0			
	78.0	8252	1.2	35.90	66.0	60.0	95.0	55.0			
	89.4	7200	1.4	31.32	57.0	60.0	95.0	48.0			
	104.5	6158	1.6	26.79	58.0	60.0	95.0	48.0			
	124.8	5158	1.9	22.44	58.0	60.0	95.0	48.0			
	138.8	4639	2.1	20.18	57.0	60.0	95.0	48.0			
	161.6	3984	2.5	17.33	57.0	60.0	95.0	47.0			
	191.3	3365	2.9	14.64	56.0	60.0	95.0	46.0			
	226.7	2839	2.2	12.35	53.0	60.0	95.0	44.0			
	347.8	1850	3.0	8.05	50.0	60.0	95.0	41.0			

PGR DRIVE TECHNOLOGIES

P_1 [kW]	n_2 [Min^{-1}]	M_2 [Nm]	f_B	i_{ges}	F_R [N]	F_A [N]	$F_{R\,GR}$ [N]	$F_{A\,GR}$ [N]	Tip / Type / Typ IE2 / IE3	Kg	mm
90.0	13.7	58967	0.8	102.18	213.2	100.0	-	-	PKD G 9390 280M4C / 280M4D	2280	274-275
	15.6	51708	1.0	89.60	212.6	100.0	-	-			
	17.2	46993	1.1	81.43	211.3	100.0	-	-			
	19.9	40633	1.2	70.41	207.5	100.0	-	-			
	21.5	37551	1.3	65.07	206.2	100.0	-	-			
	24.9	32467	1.5	56.26	201.3	100.0	-	-			
	29.3	27579	1.8	47.79	196.8	100.0	-	-			
	33.9	23845	2.1	41.32	191.4	100.0	-	-			
	38.6	20914	2.4	36.24	187.0	100.0	-	-			
	42.5	19004	2.6	32.93	183.3	100.0	-	-			
	49.2	16430	3.0	28.47	178.0	100.0	-	-			
	18.1	42561	0.9	154.29	213.2	100.0	-	-	PKD G 9390 280M2C / 280M2D	2280	274-275
	21.0	36834	1.0	133.53	213.2	100.0	-	-			
	23.7	32600	1.2	118.18	213.2	100.0	-	-			
	27.4	28186	1.3	102.18	213.2	100.0	-	-			
	31.3	24716	1.5	89.60	212.6	100.0	-	-			
	34.4	22462	1.7	81.43	211.3	100.0	-	-			
	39.8	19422	2.0	70.41	207.5	100.0	-	-			
	43.0	17949	2.1	65.07	206.2	100.0	-	-			
	49.8	15519	2.4	56.26	201.3	100.0	-	-			
	58.6	13183	2.9	47.79	196.8	100.0	-	-			
	20.3	39837	0.8	69.03	98.0	70.0	160.0	70.0	PKD 9390 280M4C / 280M4D	2035	270-271
	23.8	33881	0.9	58.71	115.0	70.0	160.0	70.0			
	28.1	28710	1.1	49.75	130.0	70.0	160.0	70.0			
	34.3	23528	1.4	40.77	140.0	70.0	160.0	70.0			
	35.8	22587	1.4	39.14	141.0	70.0	160.0	70.0			
	41.0	19696	1.6	34.13	145.0	70.0	160.0	70.0			
	47.7	16938	1.9	29.35	149.0	70.0	160.0	70.0			
	56.1	14404	2.2	24.96	152.0	70.0	160.0	70.0			
	68.6	11778	2.7	20.41	154.0	70.0	160.0	70.0			
	81.0	9978	2.1	17.29	155.0	70.0	160.0	70.0			
	98.8	8177	2.4	14.17	157.0	70.0	160.0	70.0			
	121.1	6671	2.8	11.56	-	-	160.0	70.0			
	130.7	6181	2.9	10.71	-	-	160.0	70.0			
	30.5	25304	1.0	91.73	98.0	70.0	160.0	70.0	PKD 9390 280M2C / 280M2D	2035	270-271
	35.0	22065	1.1	79.99	98.0	70.0	160.0	70.0			
	40.6	19042	1.3	69.03	98.0	70.0	160.0	70.0			
	47.7	16195	1.5	58.71	115.0	70.0	160.0	70.0			
	56.3	13723	1.8	49.75	130.0	70.0	160.0	70.0			
	68.7	11246	2.2	40.77	140.0	70.0	160.0	70.0			
	71.5	10797	2.3	39.14	141.0	70.0	160.0	70.0			
	82.0	9415	2.6	34.13	145.0	70.0	160.0	70.0			
	95.4	8096	3.0	29.35	149.0	70.0	160.0	70.0			
	33.1	24376	0.8	42.24	75.0	65.0	120.0	56.0	PKD G 8390 280M4C / 280M4D	1465	266-267
	39.4	20504	0.9	35.53	76.0	65.0	120.0	56.0			
	47.3	17070	1.2	29.58	77.0	65.0	120.0	57.0			
	55.3	14600	1.4	25.30	77.0	65.0	120.0	57.0			
	66.1	12229	1.6	21.19	76.0	65.0	120.0	56.0			
	78.5	10290	1.8	17.83	74.0	65.0	120.0	55.0			
	85.5	9447	2.0	16.37	74.0	65.0	120.0	55.0			
	94.9	8512	1.8	14.75	71.0	65.0	120.0	53.0			
	113.3	7133	2.0	12.36	70.0	65.0	120.0	52.0			
	120.4	6712	2.5	11.63	70.0	65.0	120.0	52.0			
	146.8	5505	2.4	9.54	67.0	65.0	120.0	50.0			
	173.7	4651	2.6	8.06	65.0	65.0	120.0	48.0			
	41.4	18642	0.8	67.58	75.0	65.0	120.0	65.0	PKD 8390 280M2C / 280M2D	1465	262-263
	47.5	16264	0.9	58.96	75.0	65.0	120.0	65.0			
	55.5	13908	1.1	50.42	75.0	65.0	120.0	61.0			
	66.3	11652	1.3	42.24	75.0	65.0	120.0	56.0			
	78.8	9801	1.4	35.53	76.0	65.0	120.0	56.0			
	94.7	8160	1.9	29.58	77.0	65.0	120.0	57.0			
	110.7	6979	2.2	25.30	77.0	65.0	120.0	57.0			
	132.1	5845	2.6	21.19	76.0	65.0	120.0	56.0			
	157.0	4918	2.9	17.83	74.0	65.0	120.0	55.0			
	189.8	4069	2.8	14.75	71.0	65.0	120.0	53.0			

P_1 [kW]	n_2 [Min^{-1}]	M_2 [Nm]	f_B	i_{ges}	F_R [N]	F_A [N]	$F_{R\,GR}$ [N]	$F_{A\,GR}$ [N]	Tip / Type / Typ IE2 / IE3	Kg	mm
90.0	52.3	15460	0.8	26.79	52.0	60.0	95.0	44.0	PKD 8390 280M4C / 280M4D	1215	262-263
	62.4	12950	1.0	22.44	53.0	60.0	95.0	44.0			
	69.4	11646	1.1	20.18	53.0	60.0	95.0	45.0			
	80.8	10001	1.3	17.33	53.0	60.0	95.0	44.0			
	95.6	8449	1.5	14.64	53.0	60.0	95.0	44.0			
	113.4	7127	1.2	12.35	50.0	60.0	95.0	42.0			
	173.9	4646	1.5	8.05	48.0	60.0	94.0	40.0			
	62.6	12339	0.8	44.73	52.0	60.0	95.0	55.0	PKD 8390 280M2C / 280M2D	1215	262-263
	78.0	9903	1.0	35.90	52.0	60.0	95.0	55.0			
	89.4	8640	1.1	31.32	52.0	60.0	95.0	48.0			
	104.5	7390	1.3	26.79	52.0	60.0	95.0	44.0			
	124.8	6190	1.6	22.44	53.0	60.0	95.0	44.0			
	138.8	5567	1.8	20.18	53.0	60.0	95.0	45.0			
	161.6	4780	2.1	17.33	53.0	60.0	95.0	44.0			
	191.3	4038	2.4	14.64	53.0	60.0	95.0	44.0			
	226.7	3407	1.9	12.35	50.0	60.0	95.0	42.0			
	347.8	2221	2.5	8.05	48.0	60.0	94.0	40.0			
110	15.6	63198	0.8	89.60	196.8	100.0	-	-	PKD G 9390 315S4C	2645	274-275
	17.2	57435	0.9	81.43	197.2	100.0	-	-			
	19.9	49663	1.0	70.41	195.2	100.0	-	-			
	21.5	45896	1.1	65.07	194.8	100.0	-	-			
	24.9	39682	1.3	56.26	191.5	100.0	-	-			
	29.3	33708	1.5	47.79	188.4	100.0	-	-			
	33.9	29144	1.7	41.32	184.1	100.0	-	-			
	38.6	25561	2.0	36.24	180.8	100.0	-	-			
	42.5	23227	2.2	32.93	177.7	100.0	-	-			
	49.2	20081	2.5	28.47	172.5	100.0	-	-			
	53.2	18557	2.7	26.31	170.7	100.0	-	-			
	27.4	34450	1.1	102.18	196.8	100.0	-	-	PKD G 9390 315S2C	2645	274-275
	31.3	30208	1.3	89.60	196.8	100.0	-	-			
	34.4	27454	1.4	81.43	197.2	100.0	-	-			
	39.8	23739	1.6	70.41	195.2	100.0	-	-			
	43.0	21938	1.7	65.07	194.8	100.0	-	-			
	49.8	18968	2.0	56.26	191.5	100.0	-	-			
	58.6	16112	2.4	47.79	188.4	100.0	-	-			
	67.8	13931	2.7	41.32	184.1	100.0	-	-			
	23.8	41410	0.8	58.71	85.0	70.0	160.0	70.0	PKD 9390 315S4C	2400	270-271
	28.1	35090	0.9	49.75	113.0	70.0	160.0	70.0			
	34.3	28757	1.1	40.77	130.0	70.0	160.0	70.0			
	41.0	24073	1.3	34.13	139.0	70.0	160.0	70.0			
	47.7	20702	1.5	29.35	144.0	70.0	160.0	70.0			
	56.1	17605	1.8	24.96	149.0	70.0	160.0	70.0			
	68.6	14396	2.2	20.41	152.0	70.0	160.0	70.0			
	81.0	12195	1.7	17.29	154.0	70.0	160.0	70.0			
	98.8	9995	1.9	14.17	155.0	70.0	160.0	70.0			
	121.1	8154	2.3	11.56	157.0	70.0	160.0	70.0			
	130.7	7554	2.4	10.71	157.0	70.0	160.0	70.0			
	35.0	26968	0.9	79.99	85.0	70.0	160.0	70.0	PKD 9390 315S2C	2400	270-271
	40.6	23273	1.0	69.03	85.0	70.0	160.0	70.0			
	47.7	19794	1.2	58.71	85.0	70.0	160.0	70.0			
	56.3	16773	1.4	49.75	113.0	70.0	160.0	70.0			
	68.7	13746	1.8	40.77	130.0	70.0	160.0	70.0			
	82.0	11507	2.1	34.13	139.0	70.0	160.0	70.0			
	95.4	9895	2.5	29.35	144.0	70.0	160.0	70.0			
	112.2	8415	2.9	24.96	149.0	70.0	160.0	70.0			
	161.9	5829	2.7	17.29	154.0	70.0	160.0	70.0			

P_1 [kW]	n_2 [Min^{-1}]	M_2 [Nm]	f_B	i_{ges}	F_R [N]	F_A [N]	$F_{R\,GR}$ [N]	$F_{A\,GR}$ [N]	Tip / Type / Typ IE2 / IE3	Kg	mm
110	47.3	20864	1.0	29.58	70.0	65.0	120.0	52.0	PKD G 8390 315S4C	1830	266-267
	55.3	17845	1.1	25.30	71.0	65.0	120.0	53.0			
	66.1	14946	1.3	21.19	71.0	65.0	120.0	53.0			
	78.5	12576	1.5	17.83	70.0	65.0	120.0	52.0			
	85.5	11546	1.6	16.37	70.0	65.0	120.0	52.0			
	94.9	10404	1.4	14.75	67.0	65.0	120.0	50.0			
	113.3	8718	1.6	12.36	66.0	65.0	120.0	49.0			
	120.4	8203	2.1	11.63	67.0	65.0	120.0	50.0			
	146.8	6729	1.9	9.54	64.0	65.0	120.0	48.0			
	173.7	5685	2.1	8.06	63.0	65.0	118.0	46.0			
	47.5	19878	0.8	58.96	70.0	65.0	120.0	65.0	PKD G 8390 315S2C	1830	266-267
	55.5	16999	0.9	50.42	70.0	65.0	120.0	61.0			
	66.3	14241	1.1	42.24	70.0	65.0	120.0	56.0			
	78.8	11979	1.1	35.53	70.0	65.0	120.0	56.0			
	94.7	9973	1.5	29.58	70.0	65.0	120.0	52.0			
	110.7	8530	1.8	25.30	71.0	65.0	120.0	53.0			
	132.1	7144	2.1	21.19	71.0	65.0	120.0	53.0			
	157.0	6011	2.4	17.83	70.0	65.0	120.0	52.0			
	171.0	5519	2.6	16.37	70.0	65.0	120.0	52.0			
	189.8	4973	2.3	14.75	67.0	65.0	120.0	50.0			
	226.5	4167	2.6	12.36	66.0	65.0	120.0	49.0			
	62.4	15828	0.8	22.44	-	-	95.0	44.0	PKD 8390 315S4C	1580	262-263
	80.8	12223	1.1	17.33	-	-	95.0	44.0			
	95.6	10326	1.3	14.64	-	-	95.0	44.0			
	113.4	8711	1.0	12.35	-	-	95.0	42.0			
	173.9	5678	1.3	8.05	-	-	94.0	40.0			
	89.4	10559	0.9	31.32	52.0	60.0	95.0	48.0	PKD 8390 315S2C	1580	262-263
	104.5	9032	1.1	26.79	52.0	60.0	95.0	44.0			
	124.8	7566	1.3	22.44	52.0	60.0	95.0	44.0			
	161.6	5843	1.7	17.33	52.0	60.0	95.0	44.0			
	191.3	4936	2.0	14.64	52.0	60.0	95.0	44.0			
	226.7	4164	1.5	12.35	52.0	60.0	95.0	42.0			
	347.8	2714	2.0	8.05	52.0	60.0	94.0	40.0			
132	19.9	59595	0.8	70.41	180.9	100.0	-	-	PKD G 9390 315M4C / 315M4B	2645	274-275
	21.5	55075	0.9	65.07	182.1	100.0	-	-			
	24.9	47619	1.1	56.26	181.2	100.0	-	-			
	29.3	40450	1.2	47.79	179.5	100.0	-	-			
	33.9	34973	1.4	41.32	176.5	100.0	-	-			
	38.6	30674	1.6	36.24	174.4	100.0	-	-			
	42.5	27872	1.8	32.93	171.9	100.0	-	-			
	49.2	24097	2.1	28.47	167.3	100.0	-	-			
	53.2	22269	2.2	26.31	165.3	100.0	-	-			
	61.5	19256	2.6	22.75	160.7	100.0	-	-			
	72.1	16429	3.0	19.41	156.1	100.0	-	-			
	27.4	41340	0.9	102.18	180.9	100.0	-	-	PKD 9390 315M2C / 315M2B	2645	270-271
	31.3	36250	1.0	89.60	180.9	100.0	-	-			
	34.4	32945	1.2	81.43	180.9	100.0	-	-			
	39.8	28486	1.3	70.41	180.9	100.0	-	-			
	43.0	26326	1.4	65.07	182.1	100.0	-	-			
	49.8	22762	1.7	56.26	181.2	100.0	-	-			
	58.6	19335	2.0	47.79	179.5	100.0	-	-			
	67.8	16717	2.3	41.32	176.5	100.0	-	-			
	77.3	14662	2.6	36.24	174.4	100.0	-	-			
	85.0	13323	2.9	32.93	171.9	100.0	-	-			
	28.1	42109	0.8	49.75	85.0	70.0	160.0	70.0	PKD 9390 315M4C / 315M4B	2400	270-271
	34.3	34508	0.9	40.77	116.0	70.0	160.0	70.0			
	41.0	28888	1.1	34.13	-	-	-	-			
	47.7	24842	1.3	29.35	138.0	70.0	160.0	70.0			
	56.1	21126	1.5	24.96	144.0	70.0	160.0	70.0			
	68.6	17275	1.9	20.41	149.0	70.0	160.0	70.0			
	81.0	14634	1.4	17.29	152.0	70.0	160.0	70.0			
	98.8	11994	1.6	14.17	154.0	70.0	160.0	70.0			
	121.1	9784	1.9	11.56	156.0	70.0	160.0	69.0			
	130.7	9065	2.0	10.71	156.0	70.0	160.0	68.0			

P_1 [kW]	n_2 [Min^{-1}]	M_2 [Nm]	f_B	i_{ges}	F_R [N]	F_A [N]	$F_{R\,GR}$ [N]	$F_{A\,GR}$ [N]	Tip / Type / Typ IE2 / IE3	Kg	mm
132	35.0	32362	0.8	79.99	85.0	70.0	-	-	PKD 9390 315M2C / 315M2B	2400	270-271
	40.6	27928	0.9	69.03	85.0	70.0	160.0	70.0			
	47.7	23753	1.0	58.71	85.0	70.0	160.0	70.0			
	56.3	20128	1.2	49.75	85.0	70.0	160.0	70.0			
	68.7	16495	1.5	40.77	116.0	70.0	160.0	70.0			
	82.0	13808	1.8	34.13	138.0	70.0	160.0	70.0			
	95.4	11874	2.0	29.35	138.0	70.0	160.0	70.0			
	112.2	10098	2.4	24.96	144.0	70.0	160.0	70.0			
	137.2	8257	2.9	20.41	149.0	70.0	160.0	70.0			
	161.9	6995	2.2	17.29	152.0	70.0	160.0	70.0			
	197.6	5733	2.6	14.17	154.0	70.0	160.0	69.0			
	242.2	4677	3.0	11.56	156.0	70.0	160.0	68.0			
	47.3	25037	0.8	29.58	-	-	120.0	52.0	PKD G 8390 315M4C / 315M4B	1830	266-267
	55.3	21414	0.9	25.30	64.0	65.0	120.0	47.0			
	66.1	17935	1.1	21.19	65.0	65.0	120.0	48.0			
	78.5	15091	1.3	17.83	65.0	65.0	120.0	48.0			
	85.5	13856	1.4	16.37	66.0	65.0	120.0	49.0			
	94.9	12484	1.2	14.75	63.0	65.0	120.0	47.0			
	113.3	10462	1.3	12.36	62.0	65.0	119.0	46.0			
	120.4	9844	1.7	11.63	64.0	65.0	120.0	47.0			
	146.8	8075	1.6	9.54	61.0	65.0	117.0	45.0			
	173.7	6822	1.8	8.06	60.0	65.0	114.0	45.0			
	66.3	17089	0.9	42.24	64.0	65.0	120.0	56.0	PKD G 8390 315M2C / 315M2B	1830	266-267
	78.8	14375	1.0	35.53	64.0	65.0	120.0	56.0			
	94.7	11967	1.3	29.58	64.0	65.0	120.0	52.0			
	110.7	10236	1.5	25.30	64.0	65.0	120.0	47.0			
	132.1	8573	1.8	21.19	65.0	65.0	120.0	48.0			
	157.0	7214	2.0	17.83	65.0	65.0	120.0	48.0			
	171.0	6623	2.2	16.37	66.0	65.0	120.0	49.0			
	189.8	5968	1.9	14.75	63.0	65.0	120.0	47.0			
	226.5	5001	2.1	12.36	62.0	65.0	119.0	46.0			
	240.8	4705	2.7	11.63	64.0	65.0	120.0	47.0			
	293.5	3860	2.6	9.54	61.0	65.0	117.0	45.0			
	347.4	3261	2.8	8.06	60.0	65.0	114.0	45.0			
	80.8	14668	0.9	17.33	-	-	-	-	PKD 8390 315M4C / 315M4B	1580	262-263
	95.6	12391	1.0	14.64	-	-	-	-			
	113.4	10453	0.8	12.35	-	-	-	-			
	173.9	6814	1.1	8.05	-	-	-	-			
	89.4	12671	0.8	31.32	52.0	60.0	-	-	PKD 8390 315M2C / 315M2B	1580	262-263
	104.5	10839	0.9	26.79	52.0	60.0	95.0	44.0			
	124.8	9079	1.1	22.44	52.0	60.0	95.0	44.0			
	161.6	7011	1.4	17.33	52.0	60.0	95.0	44.0			
	191.3	5923	1.7	14.64	52.0	60.0	95.0	44.0			
	226.7	4997	1.3	12.35	52.0	60.0	95.0	42.0			
	347.8	3257	1.7	8.05	52.0	60.0	94.0	40.0			
160	24.9	57720	0.9	56.26	166.4	100.0	-	-	PKD G 9390 315L4C / 315L4A	2645	274-275
	29.3	49030	1.0	47.79	168.0	100.0	-	-			
	33.9	42392	1.2	41.32	166.4	100.0	-	-			
	38.6	37180	1.3	36.24	165.2	100.0	-	-			
	42.5	33784	1.5	32.93	163.5	100.0	-	-			
	49.2	29209	1.7	28.47	160.3	100.0	-	-			
	53.2	26993	1.9	26.31	159.2	100.0	-	-			
	61.5	23340	2.1	22.75	155.3	100.0	-	-			
	72.1	19914	2.5	19.41	151.6	100.0	-	-			
	83.4	17215	2.9	16.78	147.2	100.0	-	-			

P_1 [kW]	n_2 [Min^{-1}]	M_2 [Nm]	f_B	i_{ges}	F_R [N]	F_A [N]	$F_{R\,GR}$ [N]	$F_{A\,GR}$ [N]	Tip / Type / Typ IE2 / IE3	Kg	mm
160	27.4	50109	0.8	102.18	166.4	100.0	-	-	PKD G 9390 315L2C / 315L2A	2645	274-275
	31.3	43940	0.9	89.60	166.4	100.0	-	-			
	34.4	39933	1.0	81.43	166.4	100.0	-	-			
	39.8	34529	1.1	70.41	166.4	100.0	-	-			
	43.0	31910	1.2	65.07	166.4	100.0	-	-			
	49.8	27590	1.4	56.26	166.4	100.0	-	-			
	58.6	23436	1.6	47.79	168.0	100.0	-	-			
	67.8	20263	1.9	41.32	166.4	100.0	-	-			
	77.3	17772	2.1	36.24	165.2	100.0	-	-			
	85.0	16149	2.4	32.93	163.5	100.0	-	-			
	98.3	13962	2.7	28.47	160.3	100.0	-	-			
	106.4	12902	2.9	26.31	159.2	100.0	-	-			
	34.3	41828	0.8	40.77	89.0	70.0	160.0	70.0	PKD 9390 315L4C / 315L4A	2400	270-271
	41.0	35015	0.9	34.13	-	-	-	-			
	47.7	30111	1.1	29.35	127.0	70.0	160.0	70.0			
	56.1	25608	1.2	24.96	136.0	70.0	160.0	70.0			
	68.6	20939	1.5	20.41	144.0	70.0	160.0	70.0			
	81.0	17739	1.2	17.29	148.0	70.0	160.0	70.0			
	98.8	14538	1.3	14.17	152.0	69.0	160.0	68.0			
	121.1	11860	1.6	11.56	154.0	67.0	160.0	67.0			
	130.7	10988	1.6	10.71	155.0	67.0	160.0	66.0			
	47.7	28791	0.8	58.71	89.0	70.0	160.0	70.0	PKD 9390 315L2C / 315L2A	2400	270-271
	56.3	24397	1.0	49.75	89.0	70.0	160.0	70.0			
	68.7	19993	1.2	40.77	89.0	70.0	160.0	70.0			
	82.0	16737	1.5	34.13	127.0	70.0	160.0	70.0			
	95.4	14393	1.7	29.35	127.0	70.0	160.0	70.0			
	112.2	12240	2.0	24.96	136.0	70.0	160.0	70.0			
	137.2	10009	2.4	20.41	144.0	70.0	160.0	70.0			
	161.9	8479	1.8	17.29	148.0	70.0	160.0	70.0			
	197.6	6949	2.1	14.17	152.0	69.0	160.0	68.0			
	242.2	5669	2.5	11.56	154.0	67.0	160.0	67.0			
	261.4	5252	2.6	10.71	155.0	67.0	160.0	66.0			
	55.3	25956	0.8	25.30	54.0	57.0	107.0	41.0	PKD G 8390 315L4C / 315L4A	1830	266-267
	66.1	21740	0.9	21.19	57.0	62.0	112.0	43.0			
	78.5	18293	1.0	17.83	58.0	63.0	113.0	43.0			
	85.5	16795	1.1	16.37	60.0	65.0	116.0	44.0			
	94.9	15133	1.0	14.75	57.0	62.0	110.0	42.0			
	113.3	12681	1.1	12.36	58.0	64.0	110.0	43.0			
	120.4	11932	1.4	11.63	60.0	65.0	114.0	44.0			
	146.8	9787	1.3	9.54	58.0	65.0	110.0	43.0			
	173.7	8269	1.5	8.06	57.0	65.0	108.0	42.0			
	78.8	17424	0.8	35.53	54.0	57.0	-	-	PKD G 8390 315L24C / 315L2A	1830	266-267
	94.7	14506	1.0	29.58	54.0	57.0	120.0	52.0			
	110.7	12407	1.2	25.30	54.0	57.0	107.0	41.0			
	132.1	10391	1.5	21.19	57.0	62.0	112.0	43.0			
	157.0	8744	1.7	17.83	58.0	63.0	113.0	43.0			
	171.0	8028	1.8	16.37	60.0	65.0	116.0	44.0			
	189.8	7233	1.6	14.75	57.0	62.0	110.0	42.0			
	226.5	6061	1.8	12.36	58.0	64.0	110.0	43.0			
	240.8	5703	2.3	11.63	60.0	65.0	114.0	44.0			
	293.5	4678	2.1	9.54	58.0	65.0	110.0	43.0			
	347.4	3953	2.3	8.06	57.0	65.0	108.0	42.0			
	95.6	15020	0.9	14.64	-	-	-	-	PKD 8390 315L4C / 315L4A	1580	262-263
	173.9	8259	0.9	8.05	-	-	-	-			
	104.5	13138	0.8	26.79	52.0	60.0	-	-	PKD 8390 315L2C / 315L2A	1580	262-263
	124.8	11004	0.9	22.44	52.0	60.0	-	-			
	161.6	8499	1.2	17.33	52.0	60.0	-	-			
	191.3	7179	1.4	14.64	52.0	60.0	-	-			
	226.7	6056	1.1	12.35	52.0	60.0	-	-			
	347.8	3948	1.4	8.05	52.0	60.0	-	-			

P_1 [kW]	n_2 [Min^{-1}]	M_2 [Nm]	f_B	i_{ges}	F_R [N]	F_A [N]	$F_{R\,GR}$ [N]	$F_{A\,GR}$ [N]	Tip / Type / Typ IE2 / IE3	Kg	mm
200	29.3	61287	0.8	47.79	-	-	-	-	PKD G 9390 315L4D / 315L4C	2645	274-275
	33.9	52990	0.9	41.32	-	-	-	-			
	38.6	46475	1.1	36.24	152.4	100.0	-	-			
	42.5	42230	1.2	32.93	152.1	100.0	-	-			
	49.2	36511	1.4	28.47	150.3	100.0	-	-			
	53.2	33741	1.5	26.31	150.5	100.0	-	-			
	61.5	29175	1.7	22.75	147.3	100.0	-	-			
	72.1	24892	2.0	19.41	145.3	100.0	-	-			
	83.4	21519	2.3	16.78	141.6	100.0	-	-			
	34.4	49916	0.8	81.43	152.4	100.0	-	-	PKD G 9390 315L2D / 315L2C	2645	274-275
	39.8	43161	0.9	70.41	152.4	100.0	-	-			
	43.0	39888	1.0	65.07	152.4	100.0	-	-			
	49.8	34487	1.1	56.26	152.4	100.0	-	-			
	58.6	29295	1.3	47.79	152.4	100.0	-	-			
	67.8	25329	1.5	41.32	152.4	100.0	-	-			
	77.3	22215	1.7	36.24	152.4	100.0	-	-			
	85.0	20186	1.9	32.93	152.1	100.0	-	-			
	98.3	17452	2.2	28.47	150.3	100.0	-	-			
	106.4	16128	2.4	26.31	150.5	100.0	-	-			
	123.1	13949	2.7	22.75	147.3	100.0	-	-			
	47.7	37639	0.9	29.35	-	-	160.0	70.0	PKD 9390 315L4D / 315L4C	2400	270-271
	56.1	32009	1.0	24.96	-	-	160.0	70.0			
	68.6	26174	1.2	20.41	-	-	160.0	70.0			
	81.0	22173	0.9	17.29	-	-	160.0	70.0			
	98.8	18172	1.1	14.17	-	-	160.0	68.0			
	121.1	14825	1.2	11.56	-	-	160.0	67.0			
	130.7	13735	1.3	10.71	-	-	160.0	66.0			
	56.3	30497	0.8	49.75	89.0	70.0	160.0	70.0	PKD 9390 315L2D / 315L2C	2400	270-271
	68.7	24992	1.0	40.77	89.0	70.0	160.0	70.0			
	82.0	20922	1.2	34.13	89.0	70.0	160.0	70.0			
	95.4	17991	1.4	29.35	89.0	70.0	160.0	70.0			
	112.2	15300	1.6	24.96	89.0	70.0	160.0	70.0			
	137.2	12511	1.9	20.41	89.0	70.0	160.0	70.0			
	161.9	10599	1.5	17.29	89.0	70.0	160.0	70.0			
	197.6	8686	1.7	14.17	89.0	70.0	160.0	68.0			
	242.2	7086	2.0	11.56	89.0	70.0	160.0	67.0			
	261.4	6565	2.1	10.71	89.0	70.0	160.0	66.0			
	78.5	22866	0.8	17.83	-	-	113.0	43.0	PKD G 8390 315L4D / 315L4C	1830	266-267
	85.5	20993	0.9	16.37	-	-	116.0	44.0			
	94.9	18916	0.8	14.75	-	-	110.0	42.0			
	113.3	15851	0.9	12.36	-	-	110.0	43.0			
	120.4	14915	1.1	11.63	-	-	114.0	44.0			
	146.8	12234	1.1	9.54	-	-	110.0	43.0			
	173.7	10336	1.2	8.06	-	-	108.0	42.0			
	94.7	18132	0.8	29.58	54.0	57.0	-	-	PKD G 8390 315L2D / 315L2C	1830	266-267
	110.7	15509	1.0	25.30	54.0	57.0	107.0	41.0			
	132.1	12989	1.2	21.19	54.0	57.0	112.0	43.0			
	157.0	10930	1.3	17.83	54.0	57.0	113.0	43.0			
	171.0	10035	1.4	16.37	54.0	57.0	116.0	44.0			
	189.8	9042	1.3	14.75	54.0	57.0	110.0	42.0			
	226.5	7577	1.4	12.36	54.0	57.0	110.0	43.0			
	240.8	7129	1.8	11.63	54.0	57.0	114.0	44.0			
	293.5	5848	1.7	9.54	54.0	57.0	110.0	43.0			
	347.4	4941	1.8	8.06	54.0	57.0	108.0	42.0			
	161.6	10623	0.9	17.33	52.0	60.0	-	-	PKD 8390 315L2D / 315L2C	1580	262-263
	191.3	8974	1.1	14.64	52.0	60.0	-	-			
	226.7	7570	0.8	12.35	52.0	60.0	-	-			
	347.8	4935	1.1	8.05	52.0	60.0	-	-			

Ölçü Tabloları

Dimension Tables

Maßtabelles

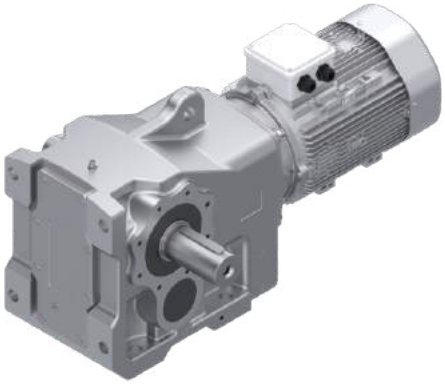

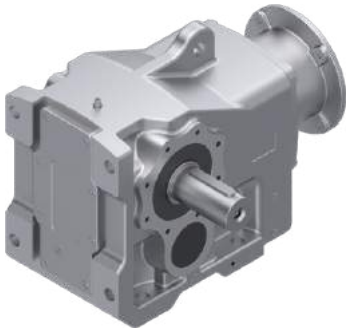

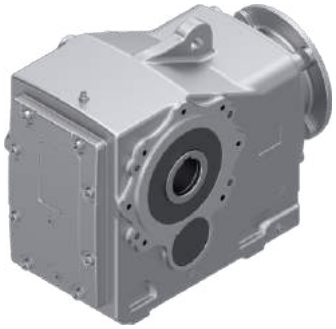

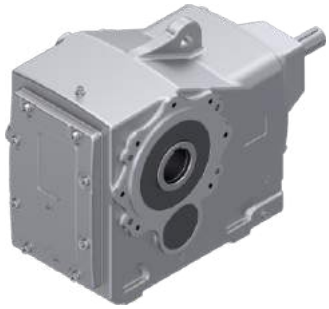

PKD

PKD A 0290 TMA

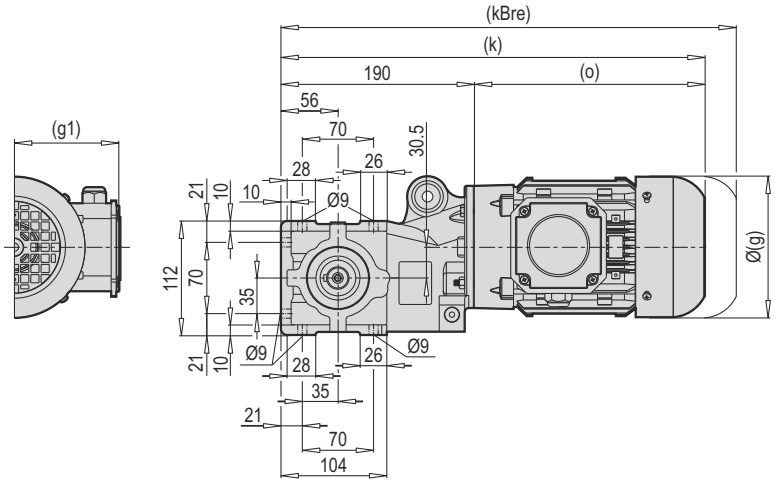

PKD A 0290 DA

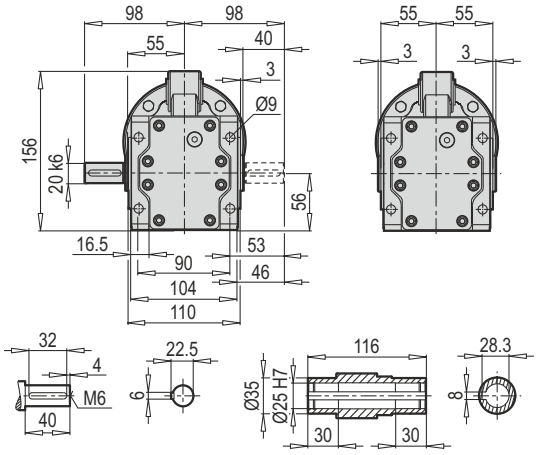

PKD A 0290 DG/B5

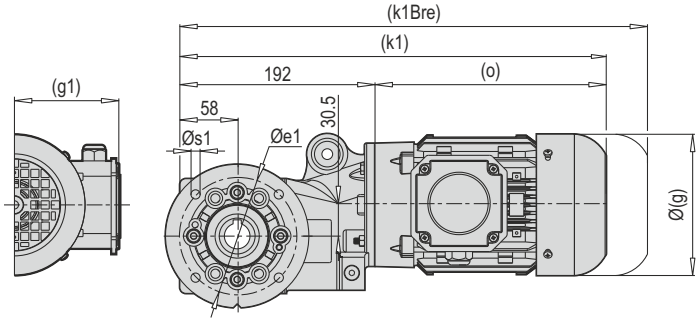

PKD A 0290 TMG/B5

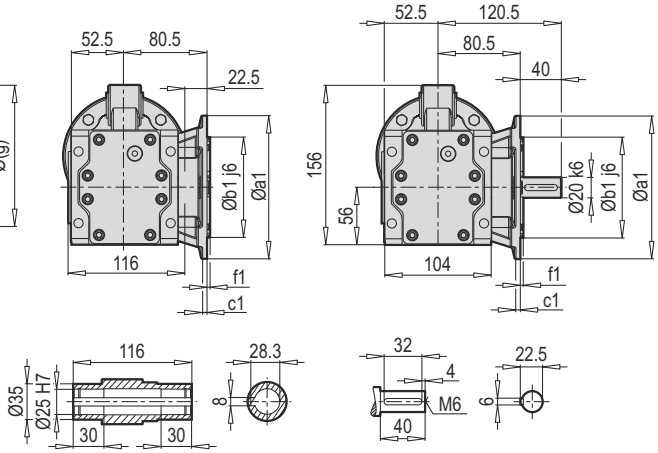

a1	b1	c1	e1	f1	s1
140	95	10	115	3	4x9

PKD A 0290 DA/Ç

66 - 67

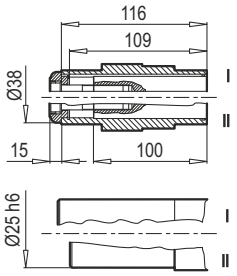

PKD A 0290 LT

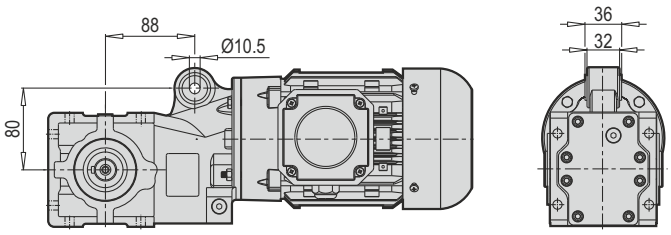

	63 M	71 M	80 M	90 S/L	100 L	112 M		
g	124	140	172	182	202	220		
g1	111	119	131	130	153	158.5		
k/k1	388/390	417/419	443/445	508/510	548/550	542/544		
kBre/k1Bre	440/442	477/479	513/515	576/578	631/633	642/644		
o	198	227	253	318	357.5	352		

Not : (...) İşaretli olan ölçüler motor markasına göre farklılık gösterir. / Note: The dimensions which have (...) sign vary depending on the motor. / Hinweis: (...) Die gekennzeichneten Maße unterscheiden sich je nach Motormarke.

PKD A 0290 DG/B14

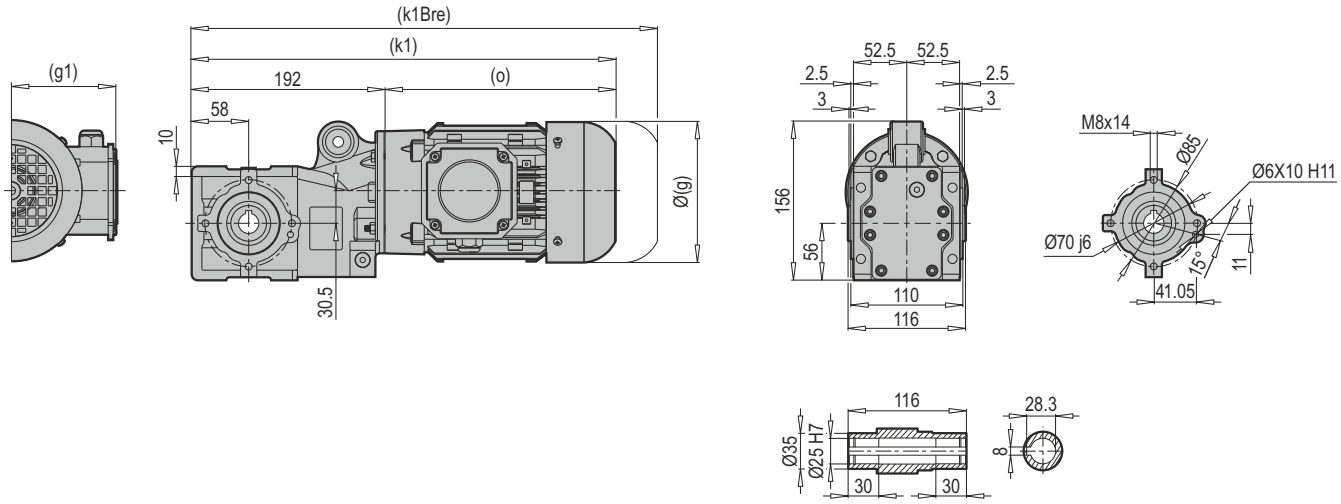

PKD A 0290 DG/KS

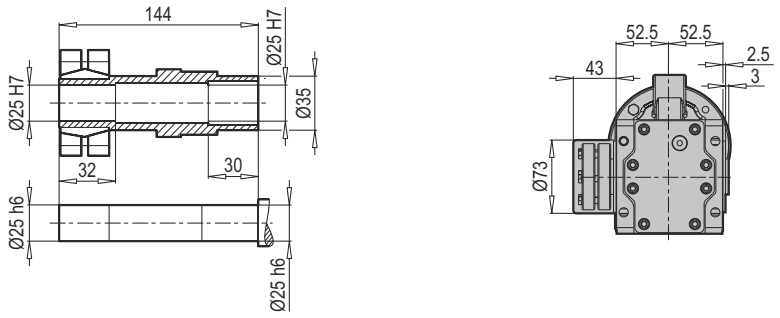

PKD A 0290 DG/Ç

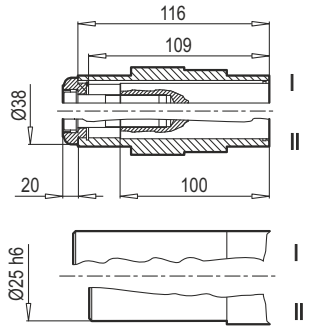

66-67

Konik sıktırma / Shrink disc / Schrumpfscheibe				Altıköşe başlı cıvata / Hexagonal screw / Sechskantschraube DIN 931 / DIN 933* 10.9Vz		
Tip / Type / Typ	M_{amax} (Nm)	s^{h6}	s^{f6}	dxl	Zs	MA (Nm)
KS 25/34	90	4.19	3.28	M5x25	6	7

	63 M	71 M	80 M	90 S/L	100 L	112 M		
g	124	140	172	182	202	220		
g1	111	119	131	130	153	158.5		
k1	390	419	445	510	550	544		
k1Bre	442	479	515	578	633	644		
o	198	227	253	318	357.5	352		

Not : (...) İşaretli olan ölçüler motor markasına göre farklılık gösterir. / Note: The dimensions which have (...) sign vary depending on the motor. / Hinweis: (...) Die gekennzeichneten Maße unterscheiden sich je nach Motormarke.

PKD A 0290 IEC

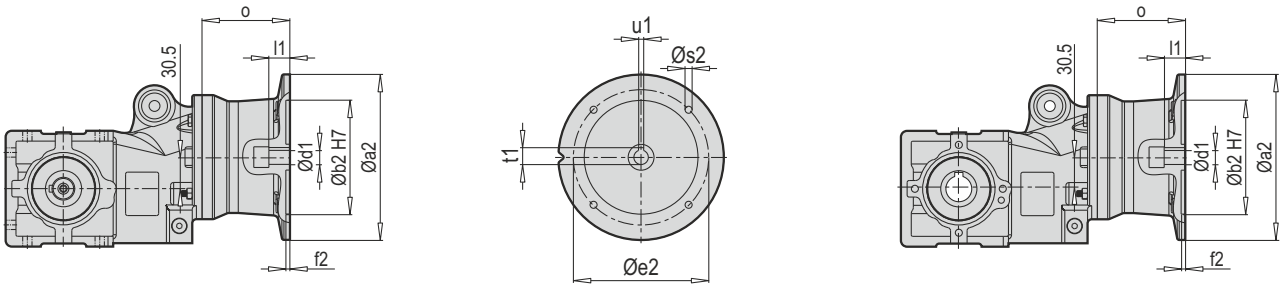

Tip / Type / Typ	IEC	Øa2	Øb2	Øe2	f2	Øs2	Ød1	l1	t1	u1	o
PKD A 0290	**63**	140	95	115	3.5	M8	11	23	12.8	4	85
	71	160	110	130	4.0	M8	14	30	16.3	5	89
	80	200	130	165	4.0	M10	19	40	21.8	6	103

~ Kg	
IEC	PKD A 0290
63	8
71	9
80	11

PKD A 0290 TMA-W

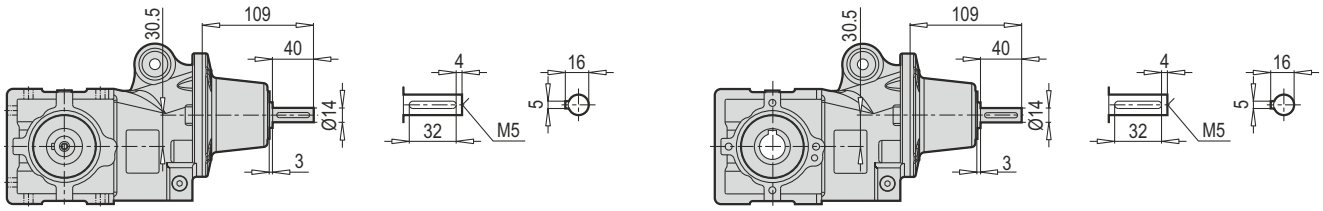

W ~ Kg	
PKD A 0290	6

PKD A 0290 PAM B5/B14

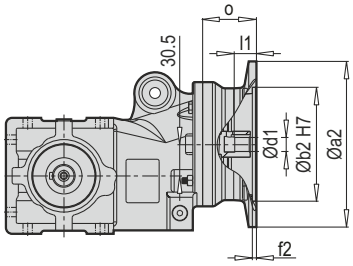

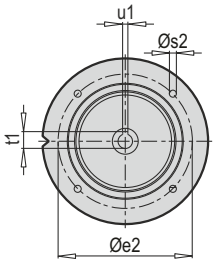

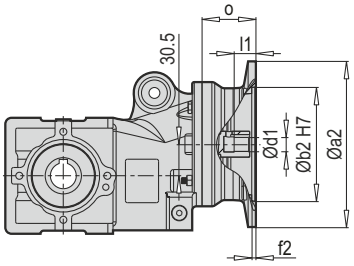

Tip / Type / Typ	PAM B5	Øa2	Øb2	Øe2	f2	Øs2	Ød1	l1	t1	u1	o
PKD A 0290	63	160	110	130	4.0	M8	14	30	16.3	5	85
	71	200	130	165	4.0	M10	19	40	21.8	6	89
	80	200	130	165	4.0	M10	24	50	27.3	8	103

~ Kg	
PAM B5	PKD A 0290
63	7
71	8
80	10

Tip / Type / Typ	PAM B14	Øa2	Øb2	Øe2	f2	Øs2	Ød1	l1	t1	u1	o
PKD A 0290	63	90	60	75	4.0	6	11	23	12.8	4	85
	71	105	70	85	4.0	7	14	30	16.3	5	89
	80	120	80	100	4.0	7	19	40	21.8	6	103

~ Kg	
PAM B14	PKD A 0290
63	7
71	8
80	10

PKD B 0290 TMA

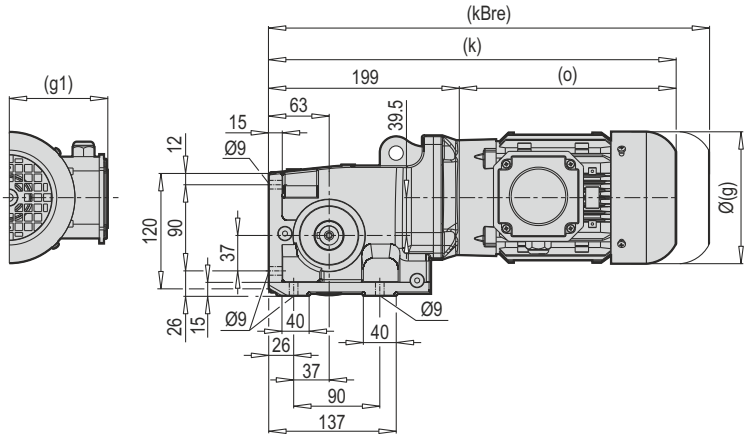

PKD B 0290 DA

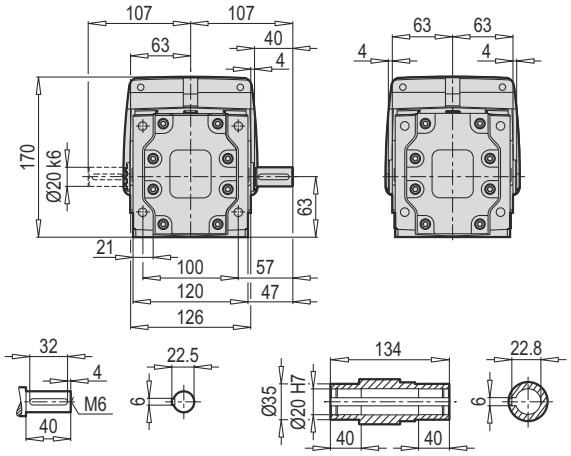

PKD B 0290 DG/B5

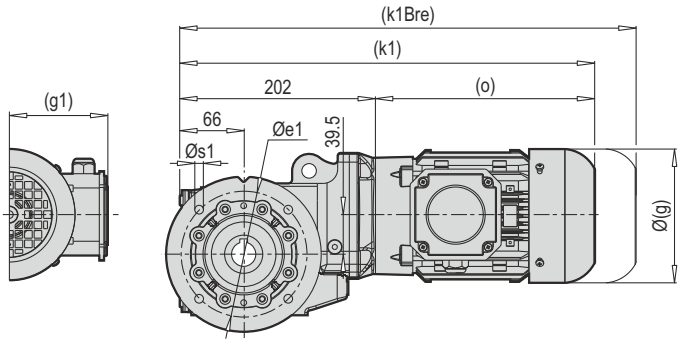

a1	b1	c1	e1	f1	s1
160	110	13	130	3.5	4x9

PKD B 0290 TMG/B5

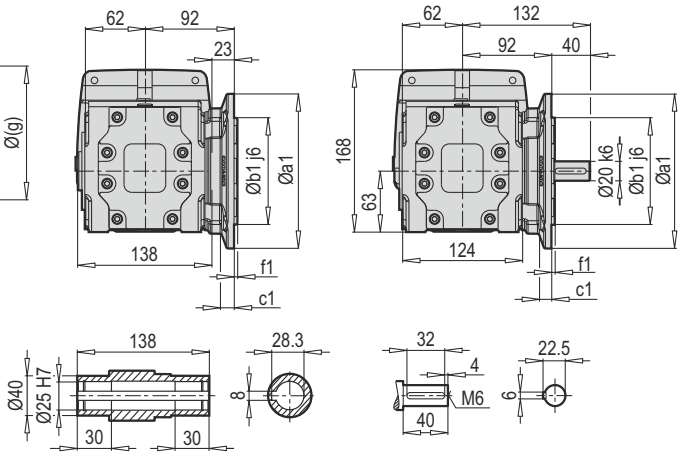

PKD B 0290 DA/Ç

66-67

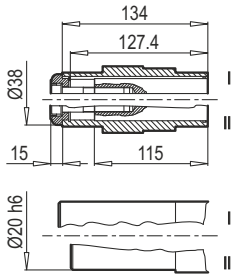

	63 M	71 M	80 M	90 S/L				
g	124	140	172	182				
g1	111	119	131	130				
k/k1	399/400	428/429	452/453	517/518				
kBre/k1Bre	451/452	488/489	522/523	585/586				
o	198	227	253	318				

Not : (...) İşaretli olan ölçüler motor markasına göre farklılık gösterir. / Note: The dimensions which have (...) sign vary depending on the motor. / Hinweis: (...) Die gekennzeichneten Maße unterscheiden sich je nach Motormarke.

PKD B 0290 DG/B14

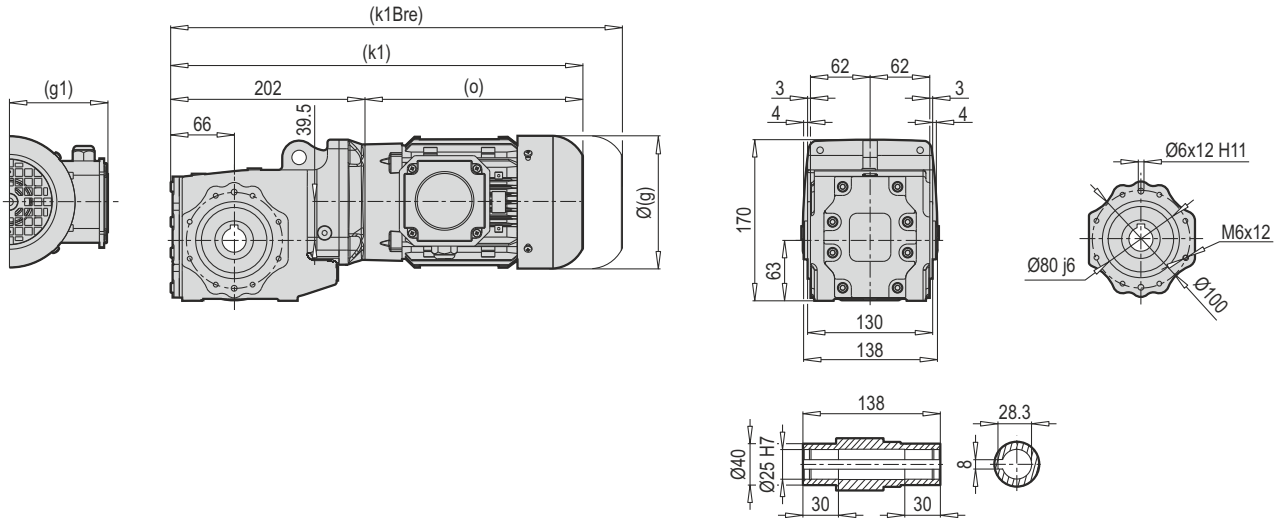

PKD B 0290 DG/KS

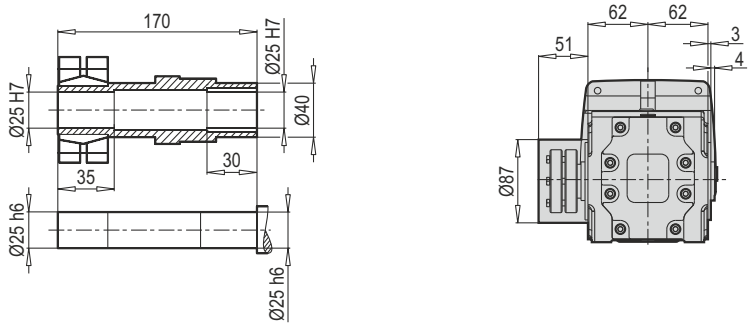

PKD B 0290 DG/Ç

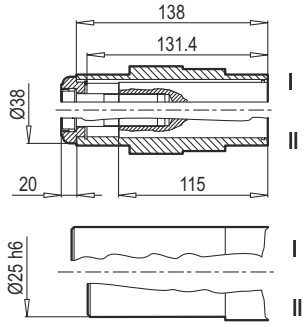

66-67

Konik sıktırma / Shrink disc / Schrumpfscheibe				Altıköşe başlı cıvata / Hexagonal screw / Sechskantschraube DIN 931 / DIN 933* 10.9Vz		
Tip / Type / Typ	M_{amax} (Nm)	s h6	s f6	dxl	Zs	MA (Nm)
KS 25/35	120	4.23	3.43	M5x25	8	7

	63 M	71 M	80 M	90 S/L				
g	124	140	172	182				
g1	111	119	131	130				
k1	400	429	453	518				
k1Bre	452	489	523	586				
o	198	227	253	318				

Not : (...) İşaretli olan ölçüler motor markasına göre farklılık gösterir. / Note: The dimensions which have (...) sign vary depending on the motor. / Hinweis: (...) Die gekennzeichneten Maße unterscheiden sich je nach Motormarke.

PKD B 0290 TMA-IEC

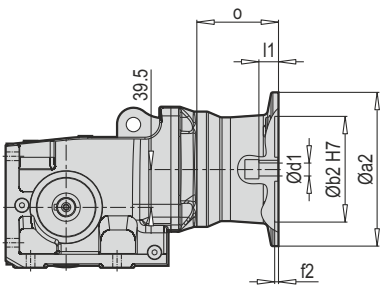

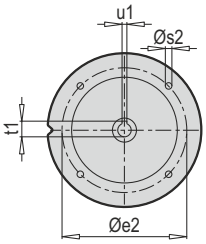

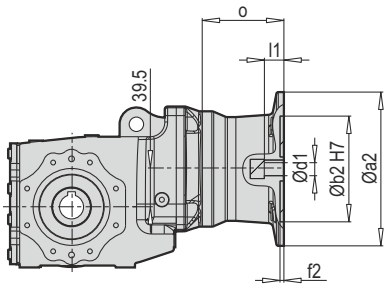

Tip / Type / Typ	IEC	Øa2	Øb2	Øe2	f2	Øs2	Ød1	l1	t1	u1	o
PKD B 0290	**63**	140	95	115	3.5	M8	11	23	12.8	4	85
	71	160	110	130	4.0	M8	14	30	16.3	5	85
	80	200	130	165	4.0	M10	19	40	21.8	6	103
	90	200	130	165	4.0	M10	24	50	27.3	8	103

~ Kg	
IEC	**PKD B 0290**
63	13
71	14
80	16
90	16

PKD B 0290 TMA-W

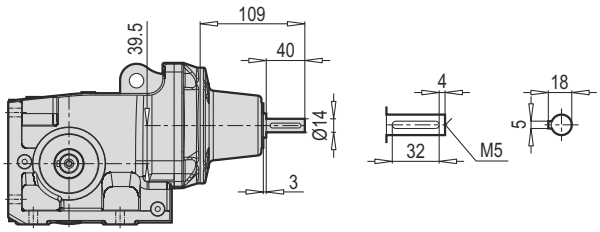

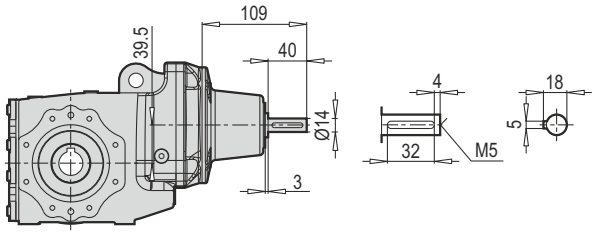

W ~ Kg	
PKD B 0290	11

PKD B 0290 PAM B5/B14

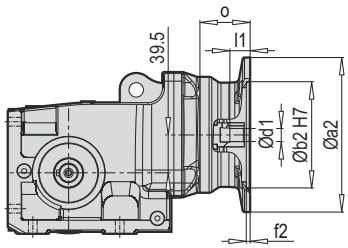

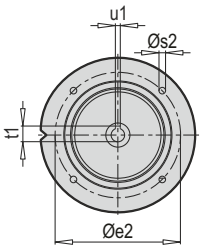

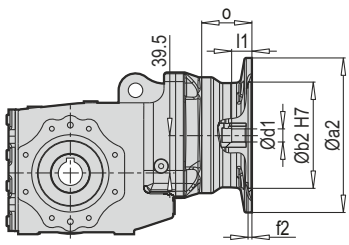

Tip / Type / Typ	PAM B5	Øa2	Øb2	Øe2	f2	Øs2	Ød1	l1	t1	u1	o
PKD B 0290	63	140	95	115	3.5	M8	11	23	12.8	4	85
	71	160	110	130	4.0	M8	14	30	16.3	5	85
	80	200	130	165	4.0	M10	19	40	21.8	6	103
	90	200	130	165	4.0	M10	24	50	27.3	8	103

~ Kg	
PAM B5	PKD B 0290
63	12
71	13
80	15
90	15

Tip / Type / Typ	PAM B14	Øa2	Øb2	Øe2	f2	Øs2	Ød1	l1	t1	u1	o
PKD B 0290	63	90	60	75	4.0	6	11	23	12.8	4	85
	71	105	70	85	4.0	7	14	30	16.3	5	85
	80	120	80	100	4.0	7	19	40	21.8	6	103
	90	140	95	115	4.0	9	24	50	27.3	8	103

~ Kg	
PAM B14	PKD B 0290
63	12
71	13
80	15
90	15

PKD C 1290 TMA

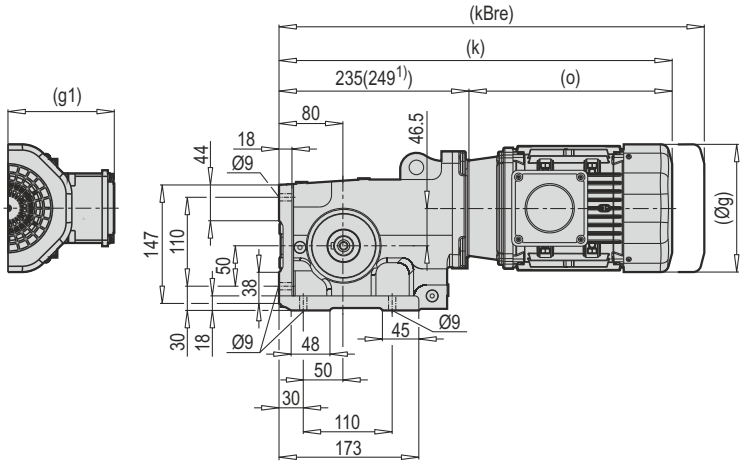

PKD C 1290 DA

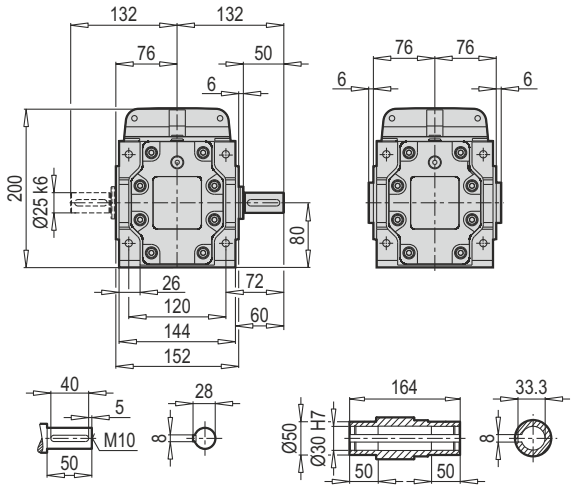

PKD C 1290 DG/B5

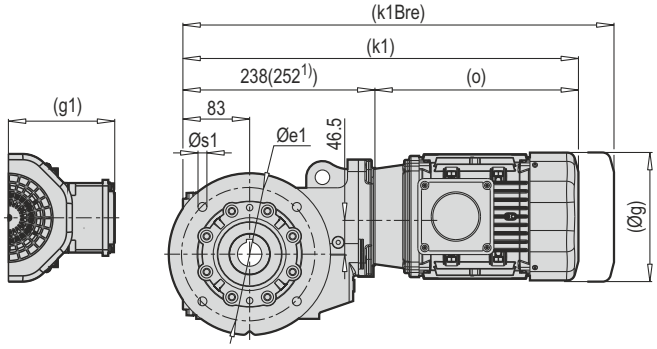

a1	b1	c1	e1	f1	s1
160	110	12	130	3.5	4x9
200	130	12	165	3.5	4x11

PKD C 1290 TMG/B5

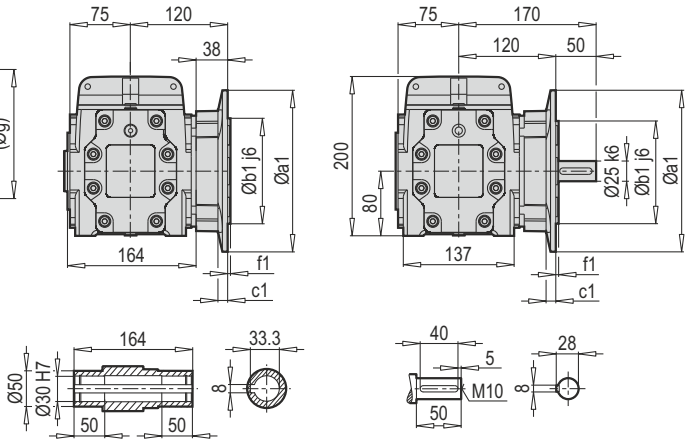

PKD C 1290 DA/Ç

66-67

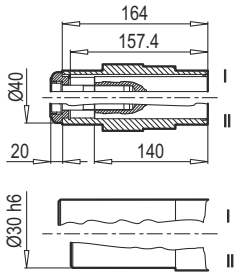

	63 M	71 M	80 M	90 S/L	100 L [1]			
g	124	140	172	182	202			
g1	111	119	131	130	153			
k/k1	433/436	462/465	488/491	553/556	593/596			
kBre/k1Bre	485/488	522/525	558/561	621/624	676/679			
o	198	227	253	318	358			

Not : (...) İşaretli olan ölçüler motor markasına göre farklılık gösterir. / Note: The dimensions which have (...) sign vary depending on the motor. / Hinweis: (...) Die gekennzeichneten Maße unterscheiden sich je nach Motormarke.

PKD C 1290 DG/B14

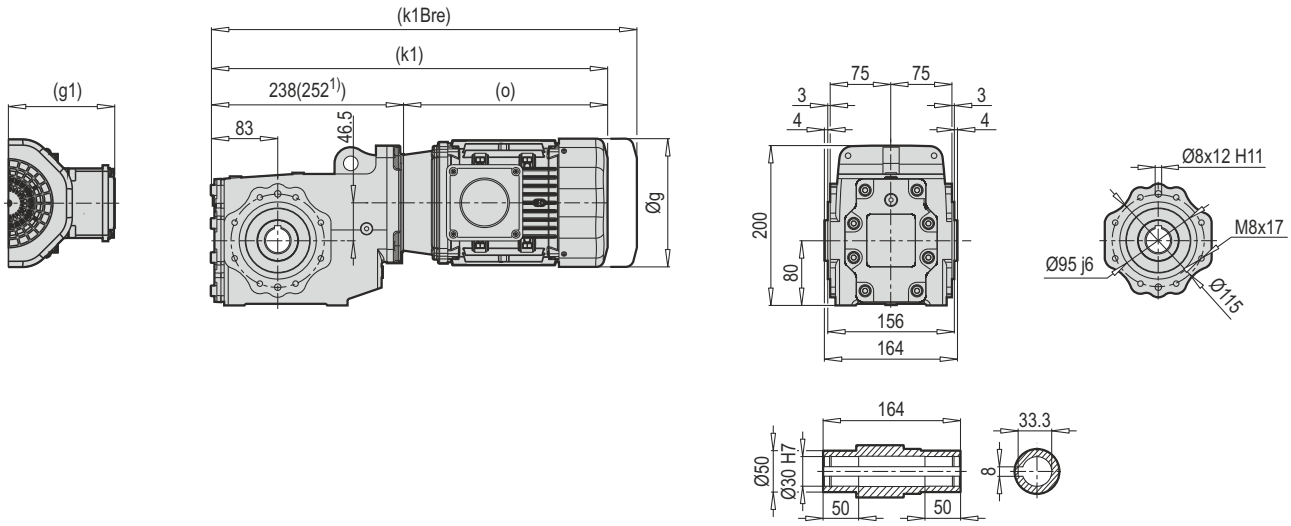

PKD C 1290 DG/KS

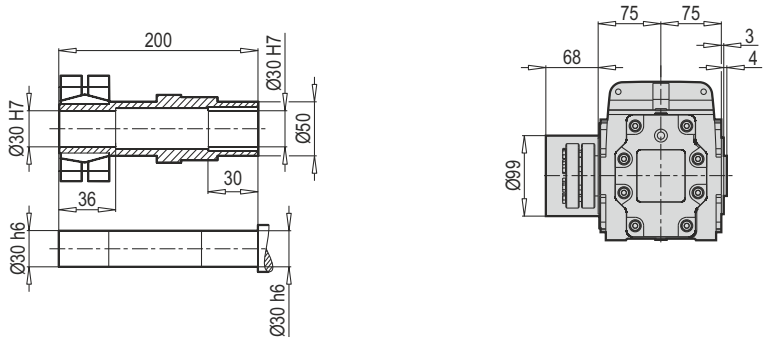

PKD C 1290 DG/Ç

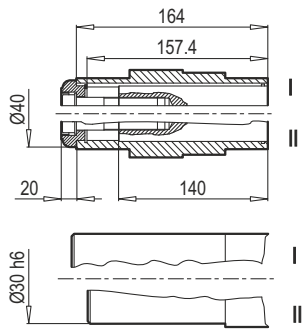

66-67

Konik sıktırma / Shrink disc / Schrumpfscheibe				Altıköşe başlı cıvata / Hexagonal screw / Sechskantschraube DIN 931 / DIN 933* 10.9Vz		
Tip / Type / Typ	M_{amax} (Nm)	s^{h6}	s^{f6}	dxl	Zs	MA (Nm)
KS 30/40	230	4.26	3.73	M6x35*	8	12

	63 M	71 M	80 M	90 S/L	100 L (1)			
g	124	140	172	182	202			
g1	111	119	131	130	153			
k1	436	465	491	556	596			
k1Bre	488	525	561	624	679			
o	198	227	253	318	358			

Not : (...) İşaretli olan ölçüler motor markasına göre farklılık gösterir. / Note: The dimensions which have (...) sign vary depending on the motor. / Hinweis: (...) Die gekennzeichneten Maße unterscheiden sich je nach Motormarke.

PKD C 1290 IEC

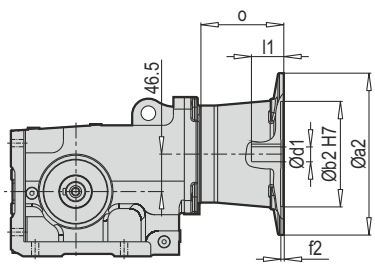

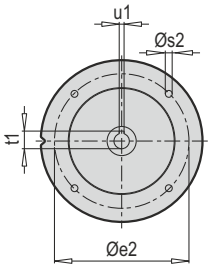

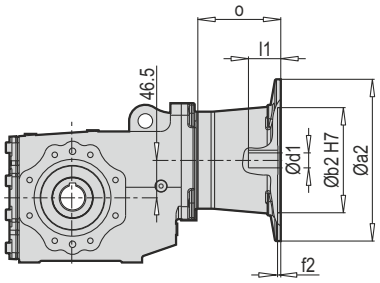

Tip / Type / Typ	IEC	Øa2	Øb2	Øe2	f2	Øs2	Ød1	l1	t1	u1	o
PKD C 1290	**63**	140	95	115	3.5	M8	11	23	12.8	4	85
	71	160	110	130	4.0	M8	14	30	16.3	5	85
	80	200	130	165	4.0	M10	19	40	21.8	6	103
	90	200	130	165	4.0	M10	24	50	27.3	8	103
	100	250	180	215	5.0	M12	28	60	31.3	8	126

~ Kg	
IEC	**PKD C 1290**
63	19
71	20
80	22
90	22
100	27

PKD C 1290 TMA-W

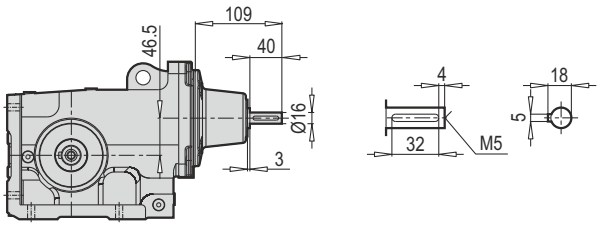

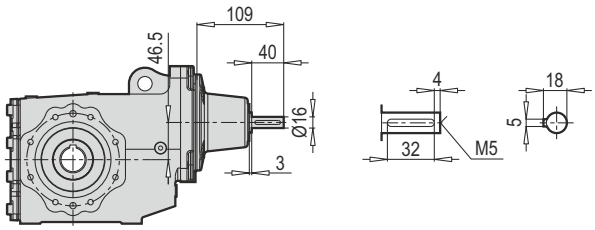

W ~ Kg	
PKD C 1290	18

PKD C 1290 PAM B5/B14

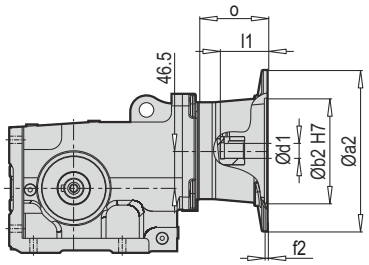

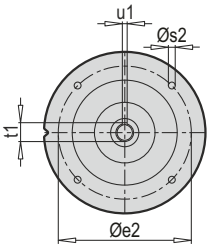

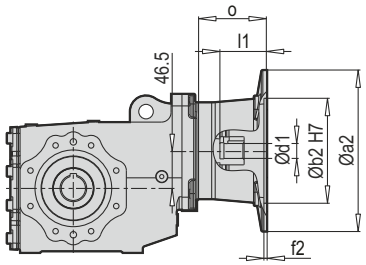

Tip / Type / Typ	PAM B5	Øa2	Øb2	Øe2	f2	Øs2	Ød1	l1	t1	u1	o
PKD C 1290	**63**	140	95	115	3.5	M8	11	23	12.8	4	85
	71	160	110	130	4.0	M8	14	30	16.3	5	85
	80	200	130	165	4.0	M10	19	40	21.8	6	103
	90	200	130	165	4.0	M10	24	50	27.3	8	103
	100	250	180	215	5.0	M12	28	60	31.3	8	126

~ Kg	
PAM B5	PKD C 1290
63	18
71	19
80	21
90	21
100	26

Tip / Type / Typ	PAM B14	Øa2	Øb2	Øe2	f2	Øs2	Ød1	l1	t1	u1	o
PKD C 1290	**63**	90	60	75	4.0	6	11	23	12.8	4	85
	71	105	70	85	4.0	7	14	30	16.3	5	85
	80	120	80	100	4.0	7	19	40	21.8	6	103
	90	140	95	115	4.0	9	24	50	27.3	8	103
	100	160	110	130	5.0	9	28	60	31.3	8	126

~ Kg	
PAM B14	PKD C 1290
63	18
71	19
80	21
90	21
100	26

PKD F 4290 TMA

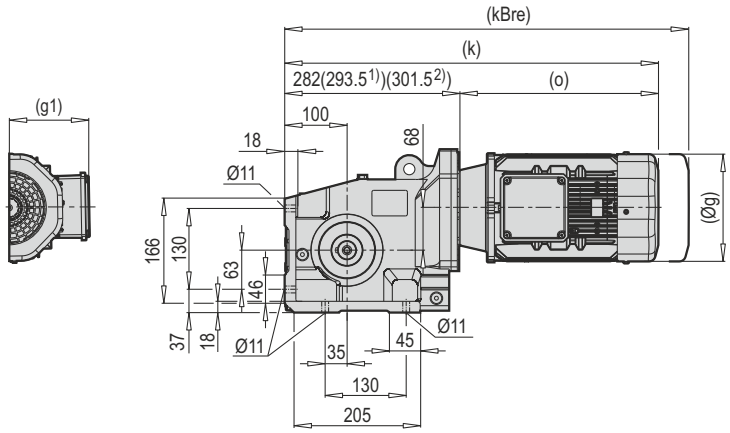

PKD F 4290 DA

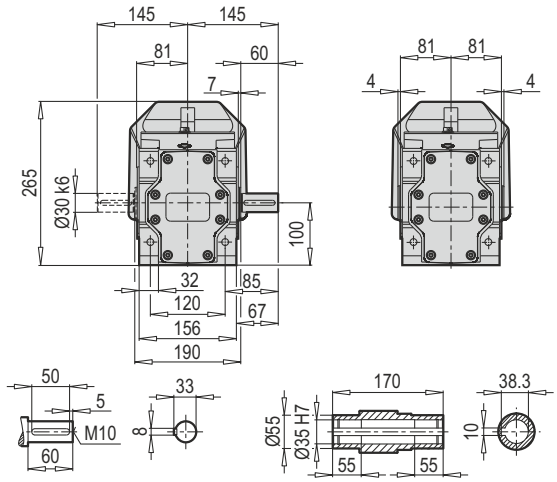

PKD F 4290 DG/B5

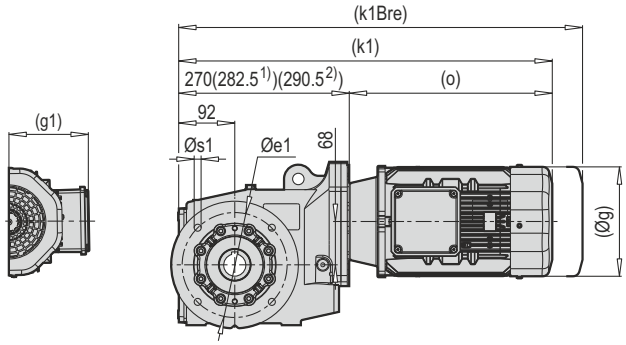

a1	b1	c1	e1	f1	s1
160	110	12	130	3.5	4x9
200	130	12	165	3.5	4x11

PKD F 4290 TMG/B5

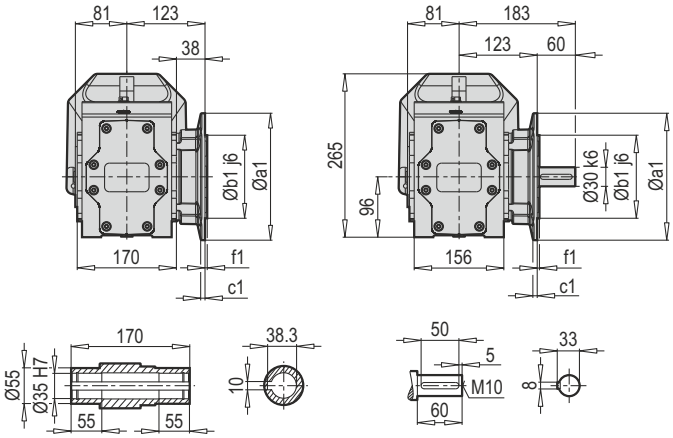

PKD F 4290 DA/Ç

66-67

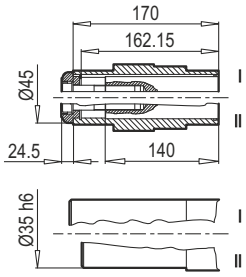

	71 M	80 M	90 S/L	100 L(1)	112 M(2)	132 S(2)	132 M(2)		
g	140	172	182	202	220	271	271		
g1	119	131	130	153	159	188	188		
k/k1	509/497	535/523	600/588	651/640	646/635	712/701	712/701		
kBre/k1Bre	569/557	605/593	668/656	735/724	746/735	812/801	832/811		
o	227	253	318	358	352	419	419		

Not : (...) İşaretli olan ölçüler motor markasına göre farklılık gösterir. / Note: The dimensions which have (...) sign vary depending on the motor. / Hinweis: (...) Die gekennzeichneten Maße unterscheiden sich je nach Motormarke.

PKD F 4290 DG/B14

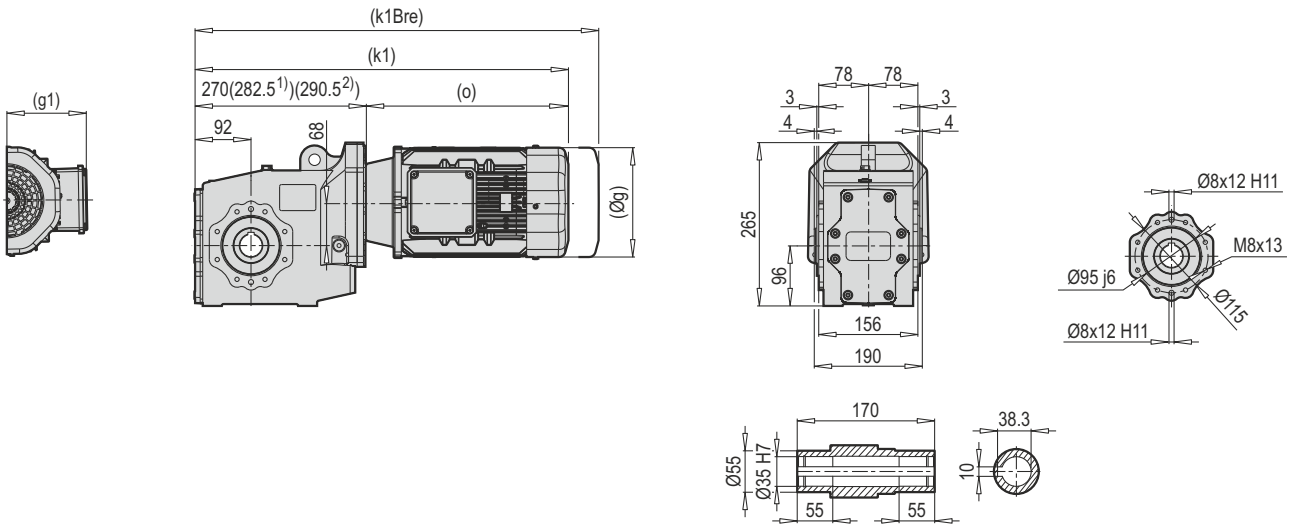

PKD F 4290 DG/KS

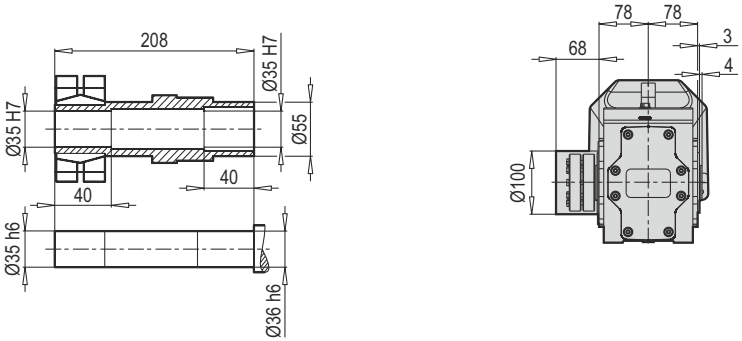

PKD F 4290 DG/Ç

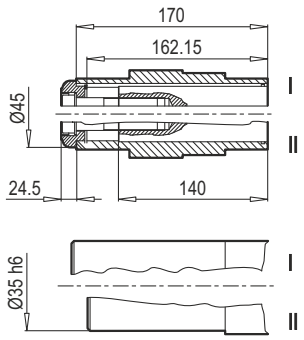

66-67

Konik sıktırma / Shrink disc / Schrumpfscheibe				Altıköşe başlı cıvata / Hexagonal screw / Sechskantschraube DIN 931 / DIN 933* 10.9Vz		
Tip / Type / Typ	M_{amax} (Nm)	s^{h6}	s^{f6}	dxl	Zs	MA (Nm)
KS 35/46	380	3.77	3.27	M6x35*	10	12

	71 M	80 M	90 S/L	100 L (1)	112 M (2)	132 S (2)	132 M (2)		
g	140	172	182	202	220	271	271		
g1	119	131	130	153	159	188	188		
k1	497	523	588	640	635	701	701		
k1Bre	557	593	656	724	735	801	811		
o	227	253	318	358	352	419	419		

Not : (...) İşaretli olan ölçüler motor markasına göre farklılık gösterir. / Note: The dimensions which have (...) sign vary depending on the motor. / Hinweis: (...) Die gekennzeichneten Maße unterscheiden sich je nach Motormarke.

PKD F 4290 IEC

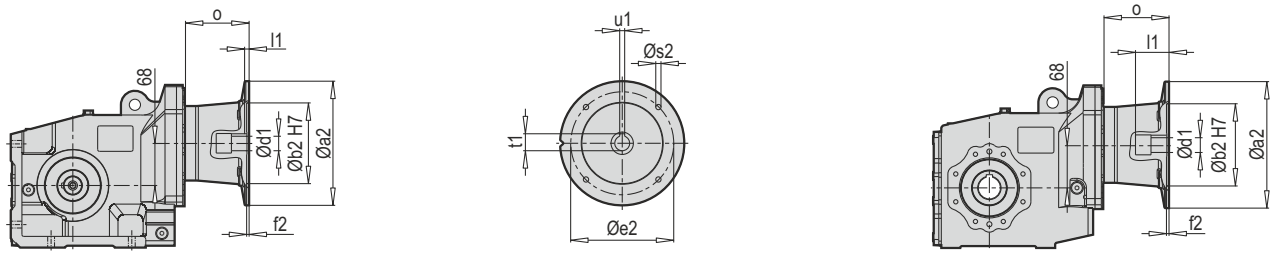

Tip / Type / Typ	IEC	Øa2	Øb2	Øe2	f2	Øs2	Ød1	l1	t1	u1	o
PKD F 4290	**63**	140	95	115	3.5	M8	11	23	12.8	4	85
	71	160	110	130	4.0	M8	14	30	16.3	5	85
	80	200	130	165	4.0	M10	19	40	21.8	6	103
	90	200	130	165	4.0	M10	24	50	27.3	8	103
	100	250	180	215	5.0	M12	28	60	31.3	8	126
	112	250	180	215	5.0	M12	28	60	31.3	8	126
	132	300	230	265	5.0	M12	38	80	41.3	10	175

~ Kg	
IEC	**PKD F 4290**
63	36
71	37
80	39
90	39
100	44
112	44
132	51

PKD F 4290 W

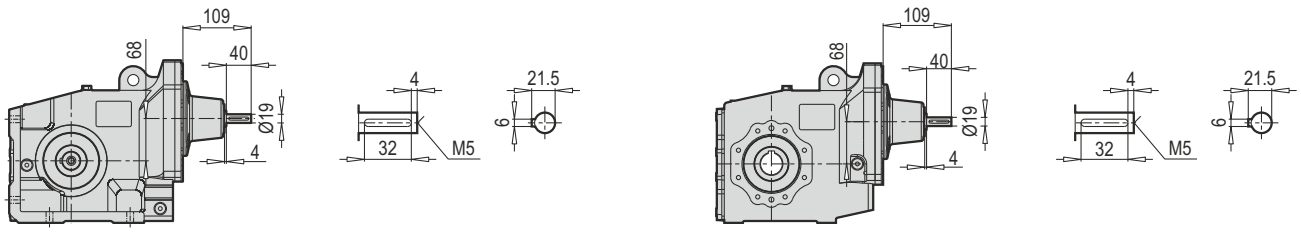

W ~ Kg	
PKD F 4290	35.5

PKD F 4290 PAM B5/B14

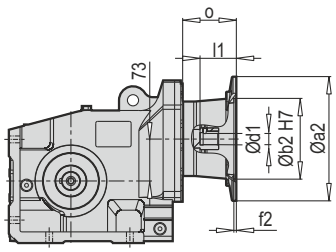

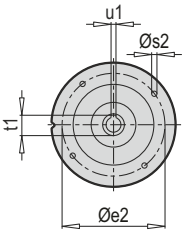

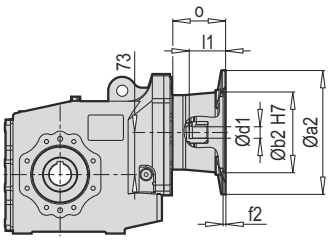

Tip / Type / Typ	PAM B5	Øa2	Øb2	Øe2	f2	Øs2	Ød1	l1	t1	u1	o
PKD F 4290	**63**	140	95	115	3.5	M8	11	23	12.8	4	85
	71	160	110	130	4.0	M8	14	30	16.3	5	85
	80	200	130	165	4.0	M10	19	40	21.8	6	103
	90	200	130	165	4.0	M10	24	50	27.3	8	103
	100	250	180	215	5.0	M12	28	60	31.3	8	126
	112	250	180	215	5.0	M12	28	60	31.3	8	126
	132	300	230	265	5.0	M12	38	80	41.3	10	175

~ Kg	
PAM B5	PKD F 4290
63	35
71	36
80	38
90	38
100	43
112	43
132	50

Tip / Type / Typ	PAM B14	Øa2	Øb2	Øe2	f2	Øs2	Ød1	l1	t1	u1	o
PKD F 4290	**63**	90	60	75	4.0	6	11	23	12.8	4	85
	71	105	70	85	4.0	7	14	30	16.3	5	85
	80	120	80	100	4.0	7	19	40	21.8	6	103
	90	140	95	115	4.0	9	24	50	27.3	8	103
	100	160	110	130	5.0	9	28	60	31.3	8	126
	112	160	110	130	5.0	9	28	60	31.3	8	126
	132	200	130	165	5.0	11	38	80	41.3	10	175

~ Kg	
PAM B14	PKD F 4290
63	34
71	35
80	37
90	37
100	42
112	42
132	49

PKD H 5290 TMA

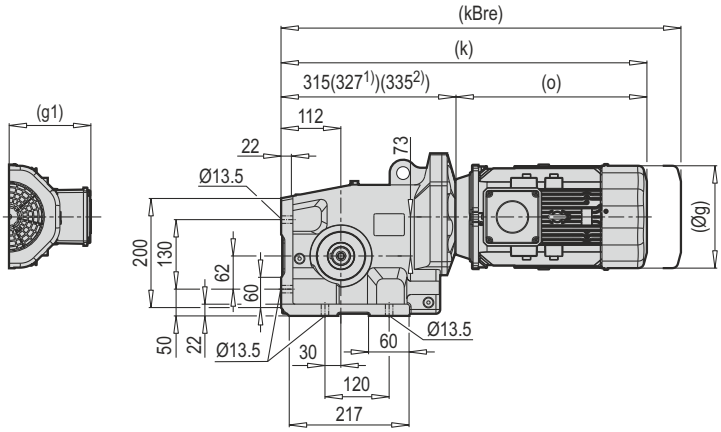

PKD H 5290 DA

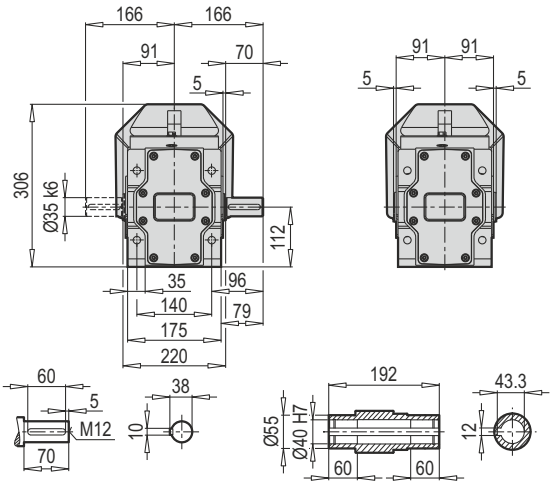

PKD H 5290 DG/B5

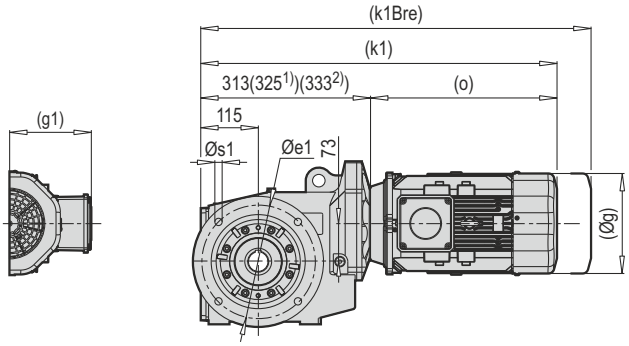

a1	b1	c1	e1	f1	s1
250	180	16	215	4	4x13.5

PKD H 5290 TMG/B5

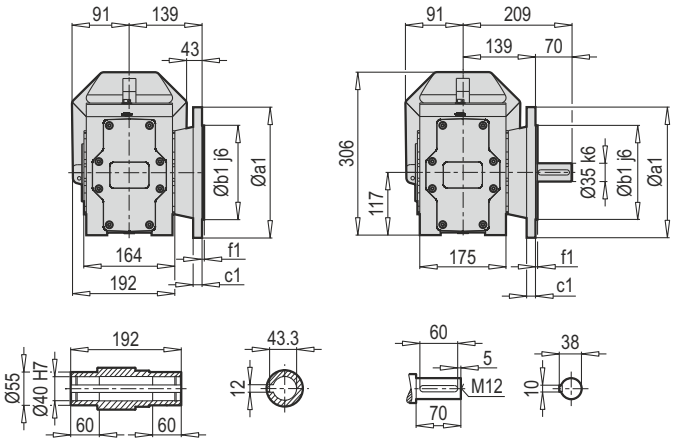

PKD H 5290 DA/Ç

66-67

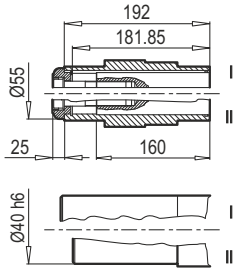

	71 M	80 M	90 S/L	100 L (1)	112 M (1)	132 S (2)	132 M (2)		
g	140	172	182	202	220	271	271		
g1	119	131	130	153	159	188	188		
k/k1	542/540	568/567	633/631	685/683	679/677	754/752	754/752		
kBre/k1Bre	602/600	638/636	701/699	768/766	779/777	853/851	853/851		
o	227	253	318	358	352	419	419		

Not : (...) İşaretli olan ölçüler motor markasına göre farklılık gösterir. / Note: The dimensions which have (...) sign vary depending on the motor. / Hinweis: (...) Die gekennzeichneten Maße unterscheiden sich je nach Motormarke.

PKD H 5290 DG/B14

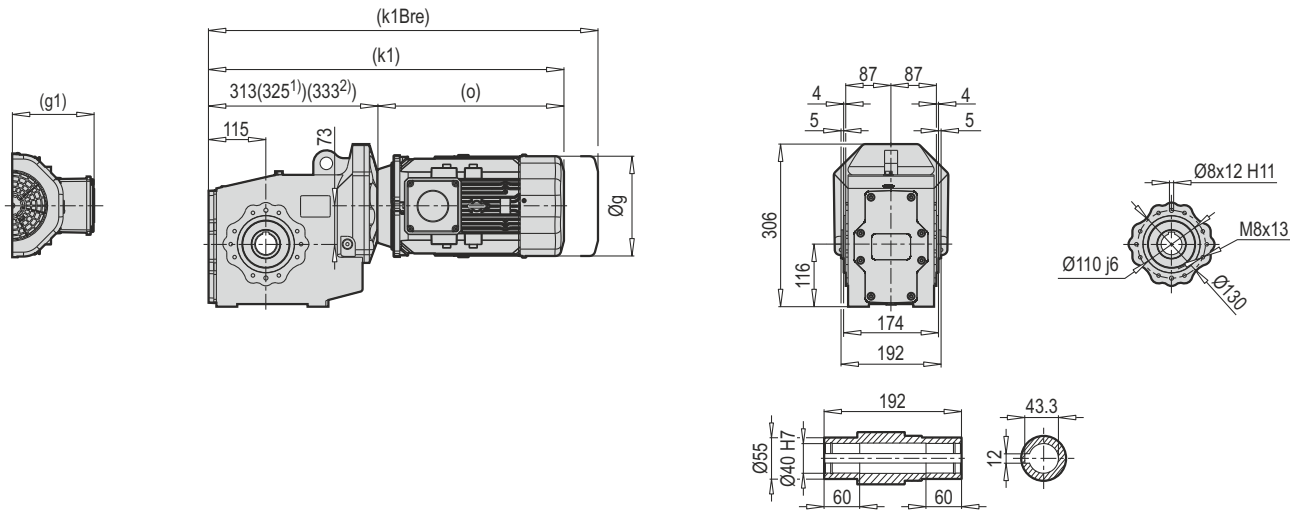

PKD H 5290 DG/KS

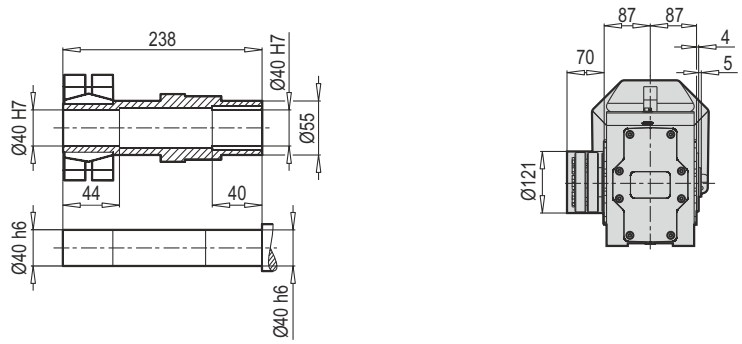

PKD H 5290 DG/Ç

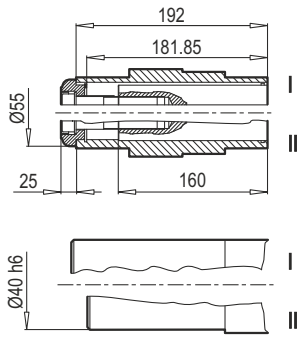

66-67

Konik sıktırma / Shrink disc / Schrumpfscheibe				Altıköşe başlı cıvata / Hexagonal screw / Sechskantschraube DIN 931 / DIN 933* 10.9Vz		
Tip / Type / Typ	M_{amax} (Nm)	s^{h6}	s^{f6}	dxl	Zs	MA (Nm)
KS 40/55	660	3.53	3.09	M8x40	8	30

	71 M	80 M	90 S/L	100 L (1)	112 M (1)	132 S (2)	132 M (2)		
g	140	172	182	202	220	271	271		
g1	119	131	130	153	159	188	188		
k1	540	567	631	683	677	752	752		
k1Bre	600	636	699	766	777	851	851		
o	227	253	318	358	352	419	419		

Not : (...) İşaretli olan ölçüler motor markasına göre farklılık gösterir. / Note: The dimensions which have (...) sign vary depending on the motor. / Hinweis: (...) Die gekennzeichneten Maße unterscheiden sich je nach Motormarke.

PKD H 5290 IEC

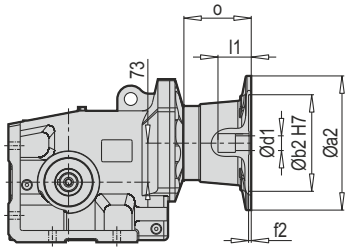

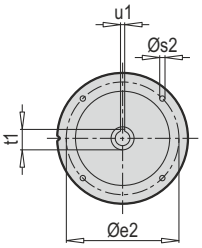

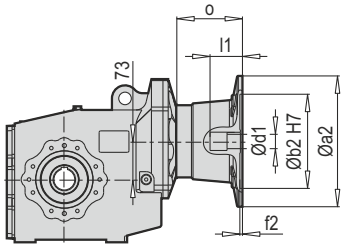

Tip / Type / Typ	IEC	Øa2	Øb2	Øe2	f2	Øs2	Ød1	l1	t1	u1	o
PKD H 5290	**63**	140	95	115	3.5	M8	11	23	12.8	4	85
	71	160	110	130	4.0	M8	14	30	16.3	5	89
	80	200	130	165	4.0	M10	19	40	21.8	6	103
	90	200	130	165	4.0	M10	24	50	27.3	8	103
	100	250	180	215	5.0	M12	28	60	31.3	8	126
	112	250	180	215	5.0	M12	28	60	31.3	8	126
	132	300	230	265	5.0	M12	38	80	41.3	10	175

~ Kg	
IEC	**PKD H 5290**
63	45
71	46
80	48
90	48
100	53
112	53
132	60

PKD H 5290 W

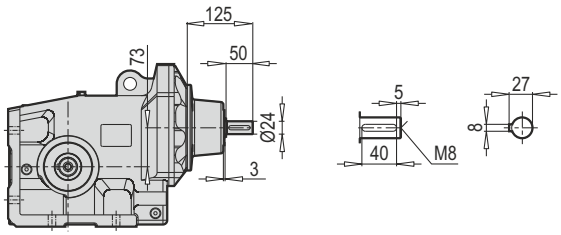

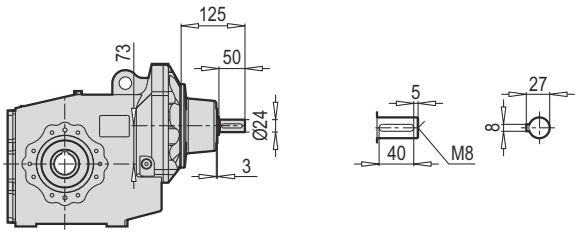

W ~ Kg	
PKD H 5290	46

PKD H 5290 PAM B5/B14

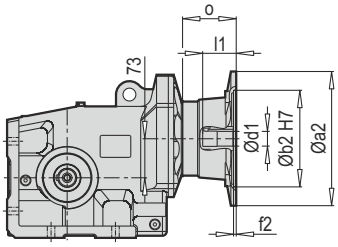

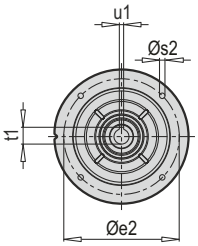

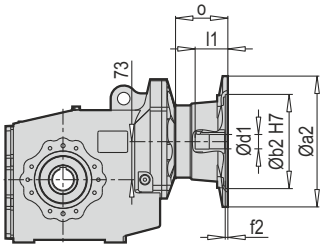

Tip / Type / Typ	PAM B5	Øa2	Øb2	Øe2	f2	Øs2	Ød1	l1	t1	u1	o
PKD H 5290	**63**	140	95	115	3.5	M8	11	23	12.8	4	85
	71	160	110	130	4.0	M8	14	30	16.3	5	89
	80	200	130	165	4.0	M10	19	40	21.8	6	103
	90	200	130	165	4.0	M10	24	50	27.3	8	103
	100	250	180	215	5.0	M12	28	60	31.3	8	126
	112	250	180	215	5.0	M12	28	60	31.3	8	126
	132	300	230	265	5.0	M12	38	80	41.3	10	175

~ Kg	
PAM B5	PKD H 5290
63	44
71	45
80	47
90	47
100	52
112	52
132	59

Tip / Type / Typ	PAM B14	Øa2	Øb2	Øe2	f2	Øs2	Ød1	l1	t1	u1	o
PKD H 5290	**63**	90	60	75	4.0	6	11	23	12.8	4	85
	71	105	70	85	4.0	7	14	30	16.3	5	89
	80	120	80	100	4.0	7	19	40	21.8	6	103
	90	140	95	115	4.0	9	24	50	27.3	8	103
	100	160	110	130	5.0	9	28	60	31.3	8	126
	112	160	110	130	5.0	9	28	60	31.3	8	126
	132	200	130	165	5.0	11	38	80	41.3	10	175

~ Kg	
PAM B14	PKD H 5290
63	43
71	44
80	46
90	46
100	51
112	51
132	58

PKD 1390 TMA

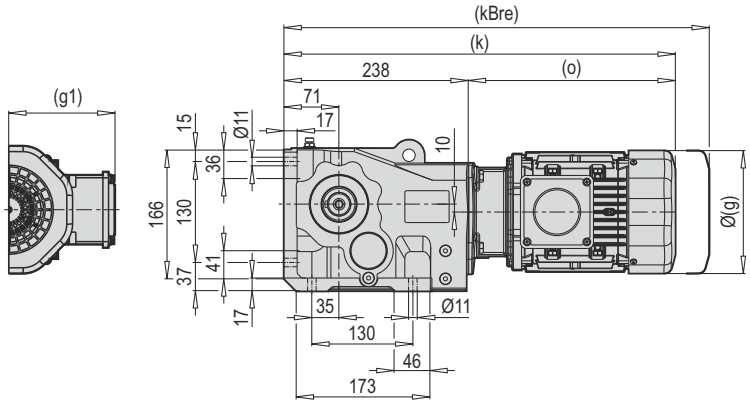

PKD 1390 DA

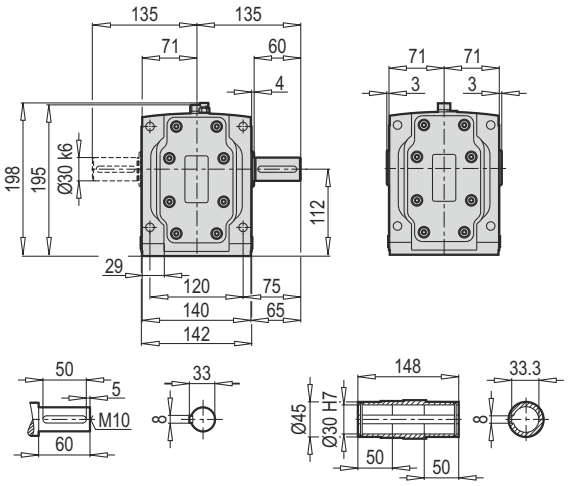

PKD 1390 DG/B5

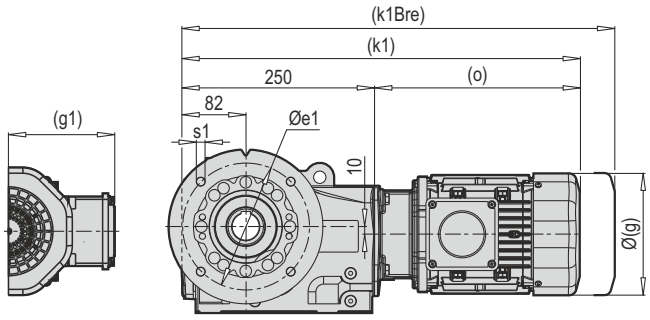

a1	b1	c1	e1	f1	s1
200	130	12	165	3.5	4x11

PKD 1390 TMG/B5

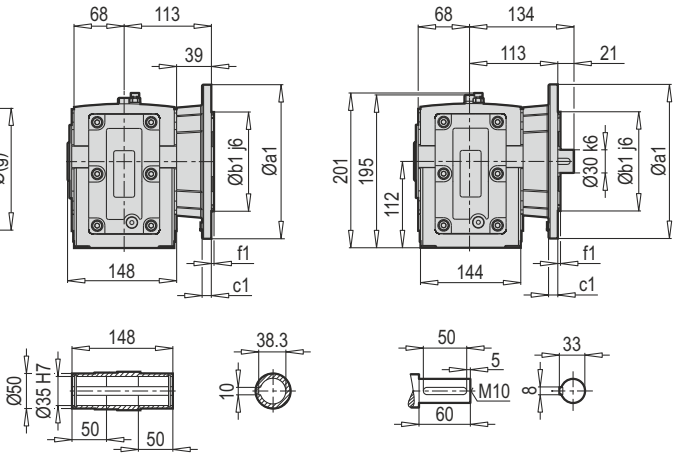

PKD 1390 DA/Ç

66-67

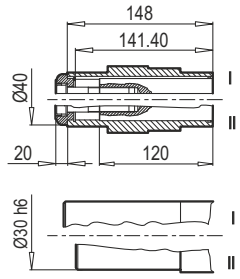

	63 M	71 M	80 M	90 S/L	100 L	112 M		
g	124	140	172	182	202	220		
g1	111	119	131	130	153	159		
k/k1	437/448	479/490	504/516	570/585	621/633	616/628		
kBre/k1Bre	489/500	539/550	574/586	578/590	705/717	716/728		
o	198	240	266	332	383	378		

Not : (...) İşaretli olan ölçüler motor markasına göre farklılık gösterir. / Note: The dimensions which have (...) sign vary depending on the motor. / Hinweis: (...) Die gekennzeichneten Maße unterscheiden sich je nach Motormarke.

PKD 1390 DG/B14

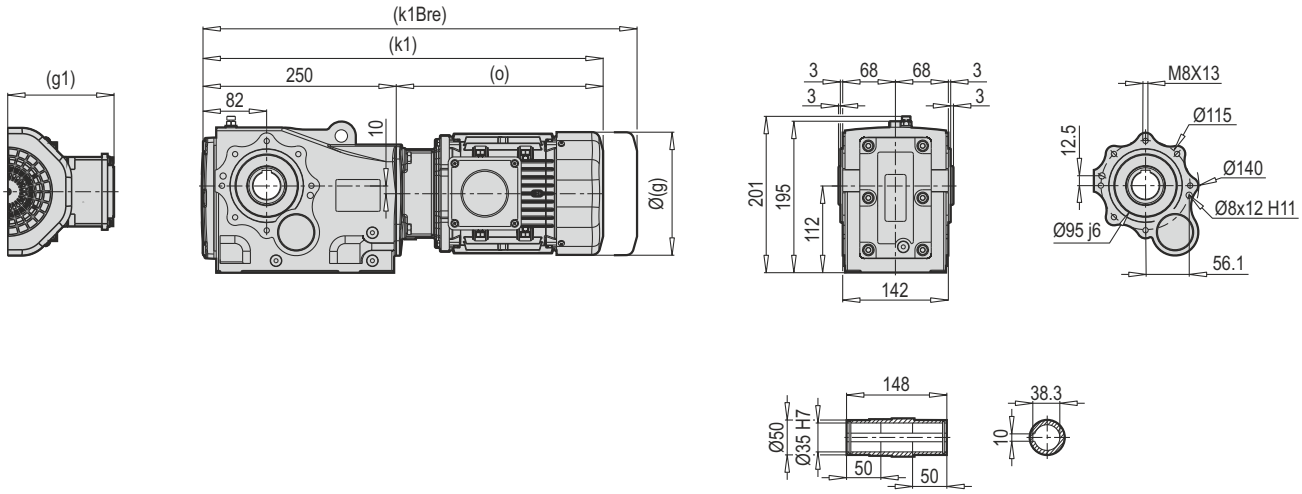

PKD 1390 DG/DIN 5480

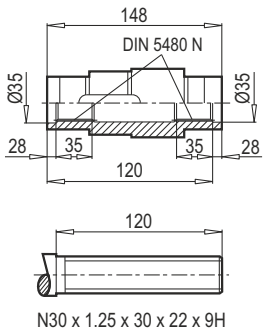

PKD 1390 DG/KS

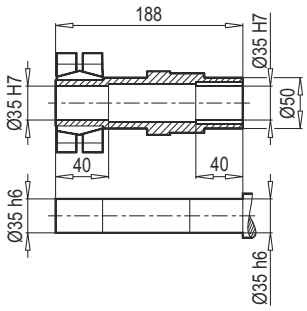

PKD 1390 DG/Ç

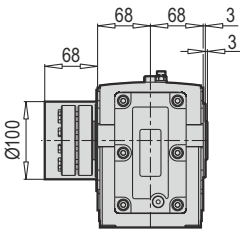

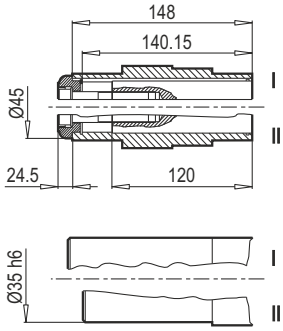

66-67

Konik sıktırma / Shrink disc / Schrumpfscheibe				Altıköşe başlı cıvata / Hexagonal screw / Sechskantschraube DIN 931 / DIN 933* 10.9Vz		
Tip / Type / Typ	M_{amax} (Nm)	s^{h6}	s^{f6}	dxl	Zs	MA (Nm)
KS 35/46	400	3.58	3.11	M6x35*	10	12

	63 M	71 M	80 M	90 S/L	100 L	112 M		
g	124	140	172	182	202	220		
g1	111	119	131	130	153	159		
k1	448	490	516	585	633	628		
k1Bre	500	550	586	590	717	728		
o	198	240	266	332	383	378		

Not : (...) İşaretli olan ölçüler motor markasına göre farklılık gösterir. / Note: The dimensions which have (...) sign vary depending on the motor. / Hinweis: (...) Die gekennzeichneten Maße unterscheiden sich je nach Motormarke.

PKD 1390 IEC

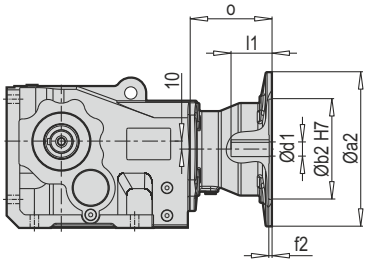

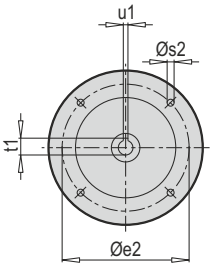

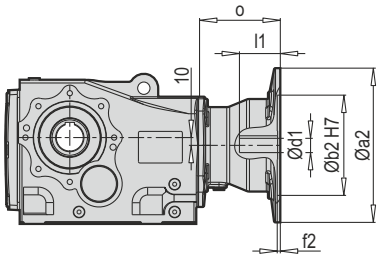

Tip / Type / Typ	IEC	Øa2	Øb2	Øe2	f2	Øs2	Ød1	l1	t1	u1	o
PKD 1390	**63**	140	95	115	3.5	M8	11	23	12.8	4	85
	71	160	110	130	4.0	M8	14	30	16.3	5	89
	80	200	130	165	4.0	M10	19	40	21.8	6	105
	90	200	130	165	4.0	M10	24	50	27.3	8	105
	100	250	180	215	5.0	M12	28	60	31.3	8	130
	112	250	180	215	5.0	M12	28	60	31.3	8	130

~ Kg	
IEC	**PKD 1390**
63	36
71	37
80	41
90	41
100	48
112	48

PKD 1390 W

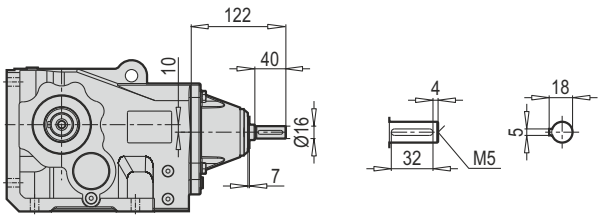

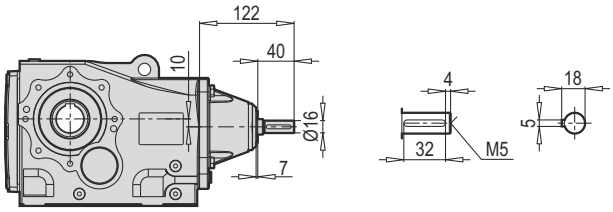

W ~ Kg	
PKD 1390	35

PKD 1390 PAM B5/B14

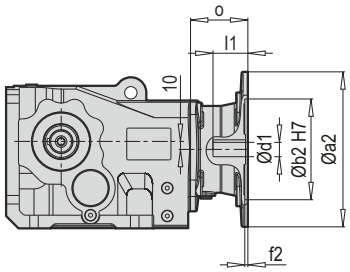

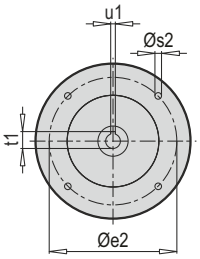

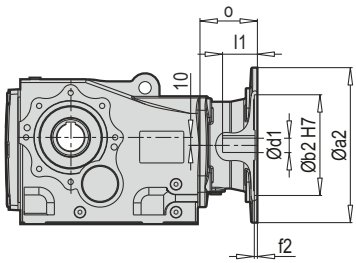

Tip / Type / Typ	PAM B5	Øa2	Øb2	Øe2	f2	Øs2	Ød1	l1	t1	u1	o
PKD 1390	**63**	140	95	115	3.5	M8	11	23	12.8	4	85
	71	160	110	130	4.0	M8	14	30	16.3	5	55
	80	200	130	165	4.0	M10	19	40	21.8	6	74
	90	200	130	165	4.0	M10	24	50	27.3	8	74
	100	250	180	215	5.0	M12	28	60	31.3	8	131.5
	112	250	180	215	5.0	M12	28	60	31.3	8	131.5

~ Kg	
PAM B5	PKD 1390
63	34
71	34
80	35
90	35
100	42
112	42

Tip / Type / Typ	PAM B14	Øa2	Øb2	Øe2	f2	Øs2	Ød1	l1	t1	u1	o
PKD 1390	**63**	90	60	75	4.0	6	11	23	12.8	4	60
	71	105	70	85	4.0	7	14	30	16.3	5	55
	80	120	80	100	4.0	7	19	40	21.8	6	74
	90	140	95	115	4.0	9	24	50	27.3	8	74
	100	160	110	130	5.0	9	28	60	31.3	8	75
	112	160	110	130	5.0	11	28	60	31.3	8	75

~ Kg	
PAM B14	PKD 1390
63	33
71	33
80	34
90	34
100	35
112	35

PKD 1490 TMA

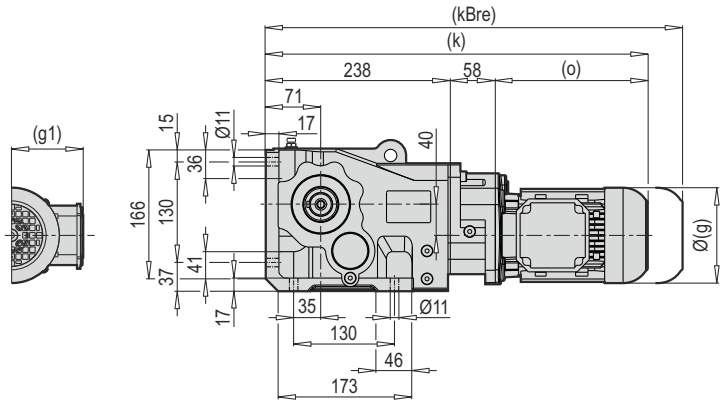

PKD 1490 DA

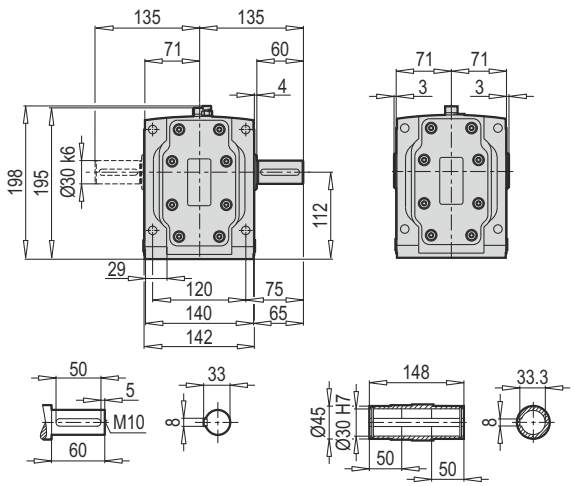

PKD 1490 DG/B5

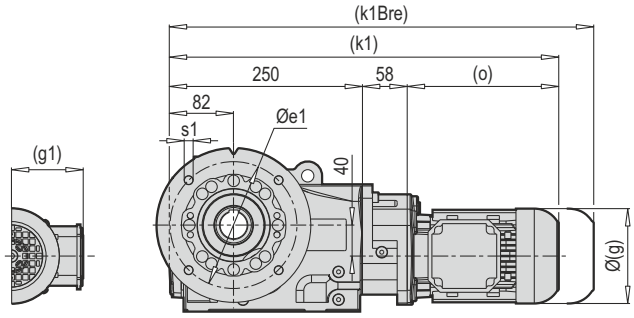

a1	b1	c1	e1	f1	s1
200	130	12	165	3.5	4x11

PKD 1490 TMG/B5

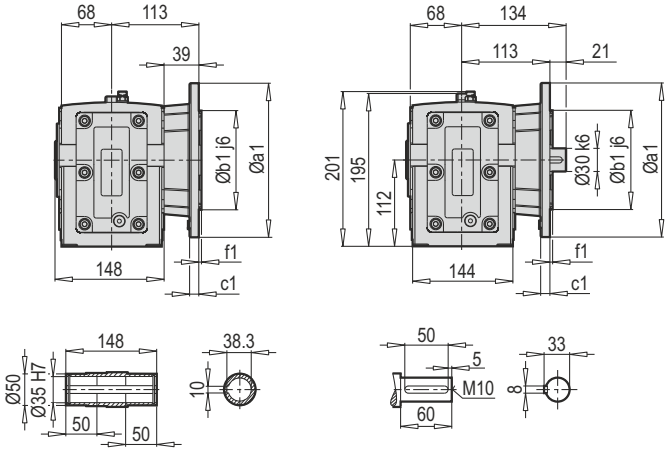

PKD 1490 DA/Ç

66-67

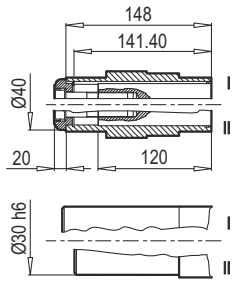

	63 M	71 M						
g	124	140						
g1	111	119						
k/k1	495/506	537/548						
kBre/k1Bre	547/558	597/608						
o	198	240						

Not : (...) İşaretli olan ölçüler motor markasına göre farklılık gösterir. / Note: The dimensions which have (...) sign vary depending on the motor. /
Hinweis: (...) Die gekennzeichneten Maße unterscheiden sich je nach Motormarke.

PKD 1490 DG/B14

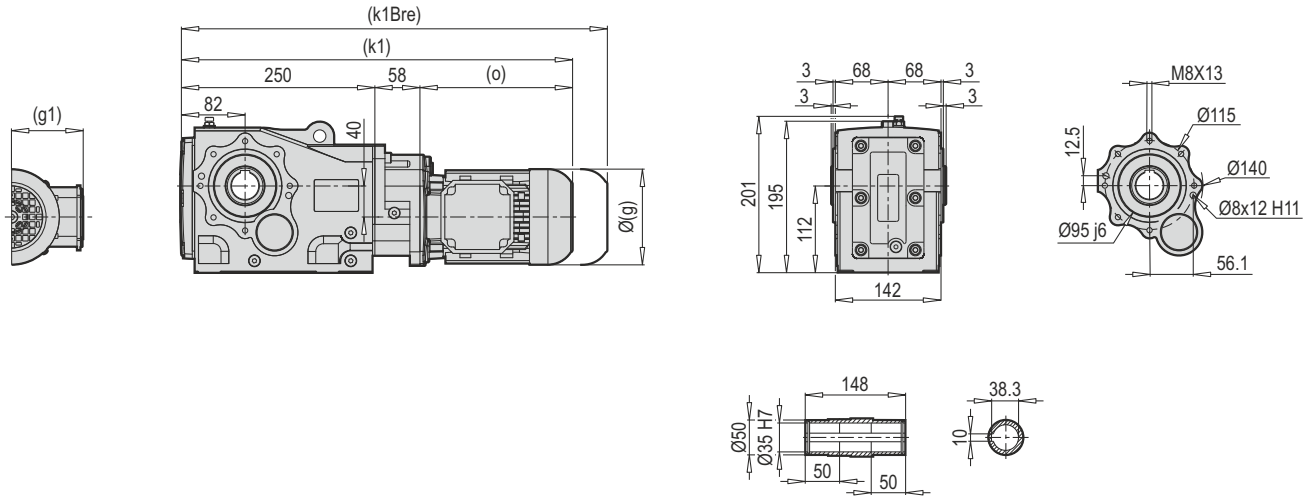

PKD 1490 DG/DIN 5480

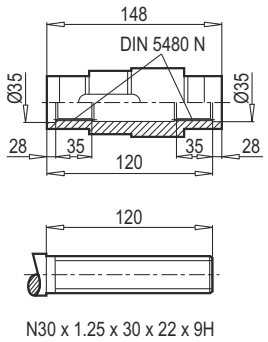

PKD 1490 DG/KS

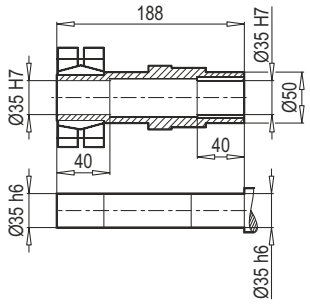

PKD 1490 DG/Ç

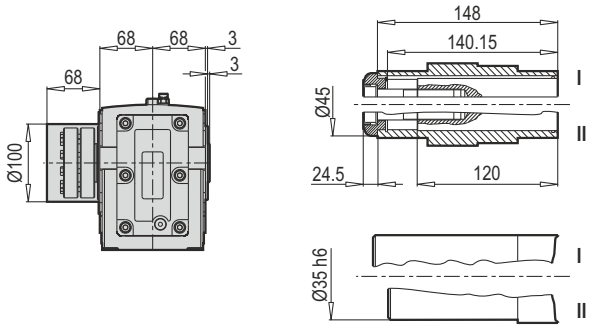

66-67

Konik sıktırma / Shrink disc / Schrumpfscheibe				Altıköşe başlı cıvata / Hexagonal screw / Sechskantschraube DIN 931 / DIN 933* 10.9Vz		
Tip / Type / Typ	M_{amax} (Nm)	s^{h6}	s^{f6}	dxl	Zs	MA (Nm)
KS 35/46	400	3.58	3.11	M6x35*	10	12

	63 M	71 M						
g	124	140						
g1	111	119						
k1	506	548						
k1Bre	558	608						
o	198	240						

Not : (...) İşaretli olan ölçüler motor markasına göre farklılık gösterir. / Note: The dimensions which have (...) sign vary depending on the motor. / Hinweis: (...) Die gekennzeichneten Maße unterscheiden sich je nach Motormarke.

PKD 1490 IEC

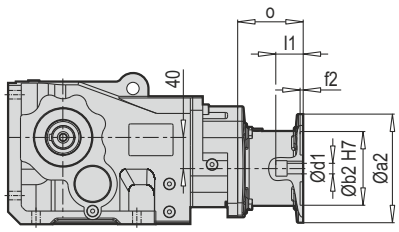

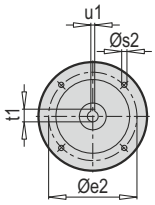

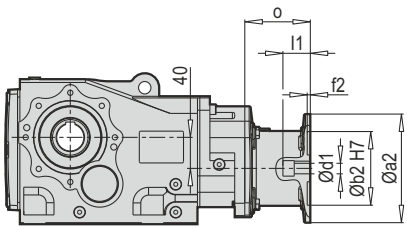

Tip / Type / Typ	IEC	Øa2	Øb2	Øe2	f2	Øs2	Ød1	l1	t1	u1	o
PKD 1490	63	140	95	115	3.5	M8	11	23	12.8	4	85
	71	160	110	130	4.0	M8	14	30	16.3	5	89

~ Kg	
IEC	PKD 1490
63	36
71	37

PKD 1490 W

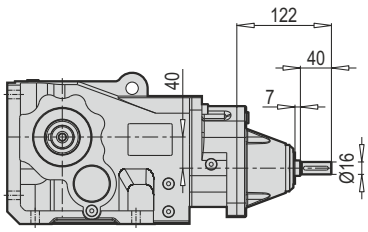

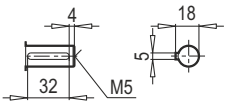

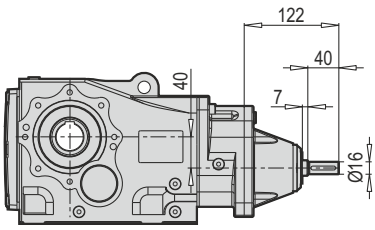

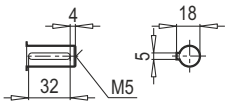

W ~ Kg	
PKD 1490	41

PKD 1490 PAM B5/B14

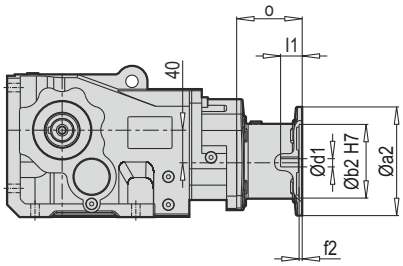

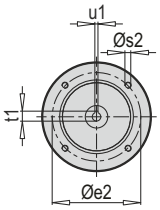

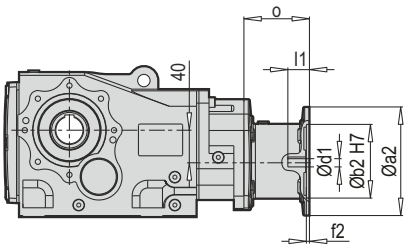

Tip / Type / Typ	PAM B5	Øa2	Øb2	Øe2	f2	Øs2	Ød1	l1	t1	u1	o
PKD 1490	63	140	95	115	3.5	M8	11	23	12.8	4	85
	71	160	110	130	4.0	M8	14	30	16.3	5	55

~ Kg	
PAM B5	PKD 1490
63	39
71	39

Tip / Type / Typ	PAM B14	Øa2	Øb2	Øe2	f2	Øs2	Ød1	l1	t1	u1	o
PKD 1490	63	90	60	75	4.0	6	11	23	12.8	4	60
	71	105	70	85	4.0	7	14	30	16.3	5	55

~ Kg	
PAM B14	PKD 1490
63	38
71	38

PKD G 1390 TMA

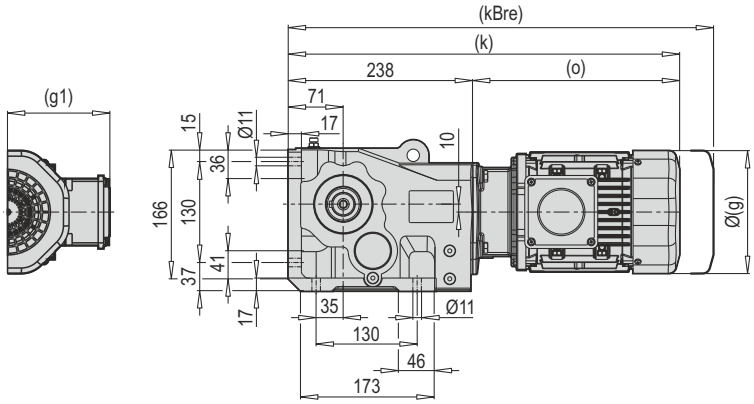

PKD G 1390 DA

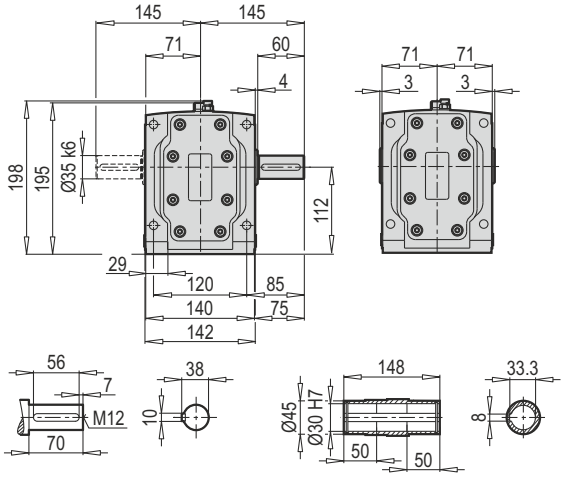

PKD G 1390 DG/B5

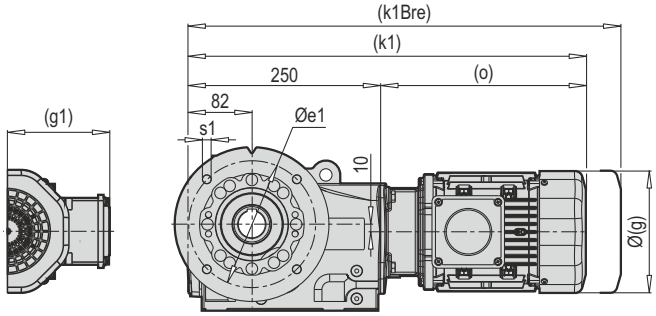

a1	b1	c1	e1	f1	s1
200	130	12	165	3.5	4x11

PKD G 1390 TMG/B5

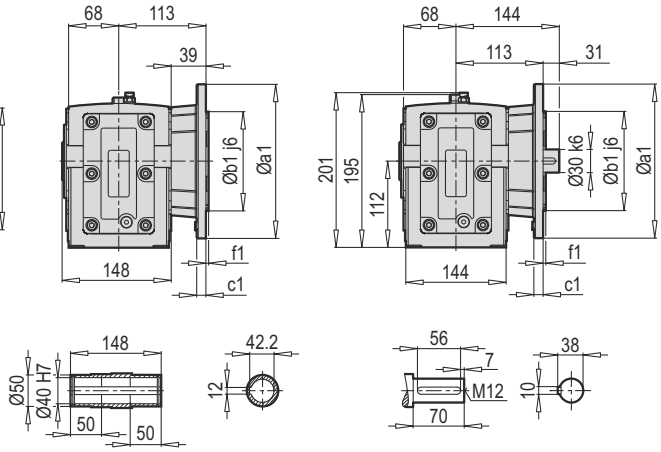

PKD G 1390 DA/Ç

66-67

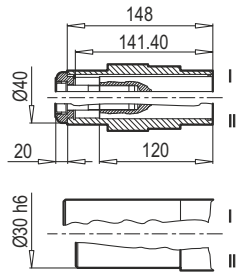

	63 M	71 M	80 M	90 S/L	100 L	112 M		
g	124	140	172	182	202	220		
g1	111	119	131	130	153	159		
k/k1	437/448	479/490	504/516	570/582	621/633	616/628		
kBre/k1Bre	489/500	539/550	574/586	578/590	705/717	716/728		
o	198	240	266	332	383	378		

Not : (...) İşaretli olan ölçüler motor markasına göre farklılık gösterir. / Note: The dimensions which have (...) sign vary depending on the motor. / Hinweis: (...) Die gekennzeichneten Maße unterscheiden sich je nach Motormarke.

PKD G 1390 DG/B14

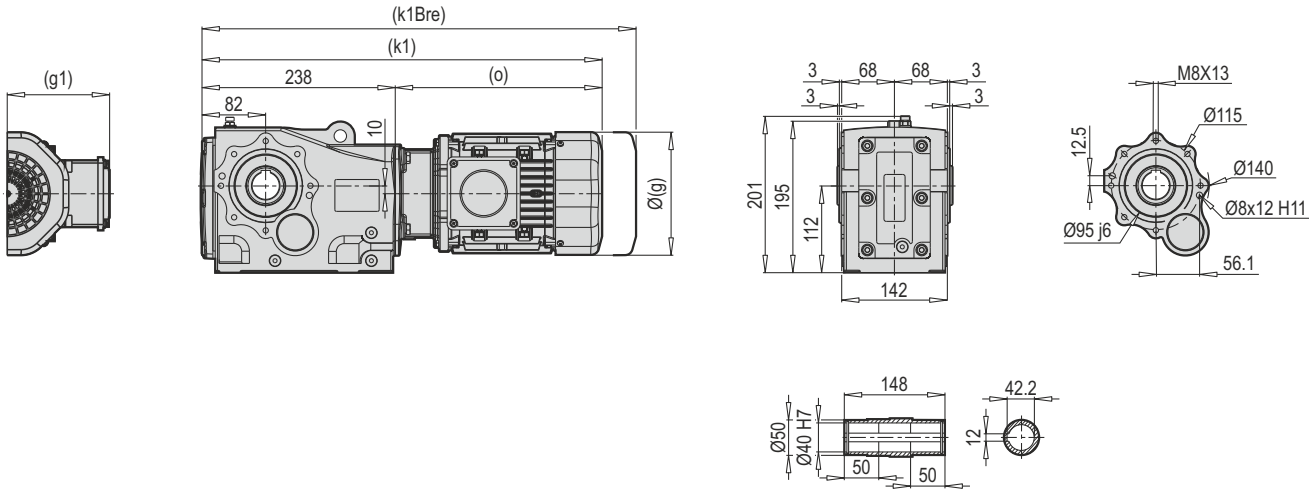

PKD G 1390 DG/DIN 5480

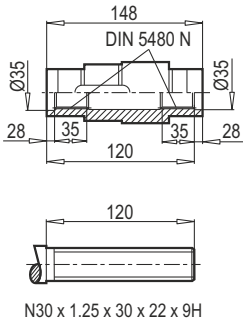

PKD G 1390 DG/KS

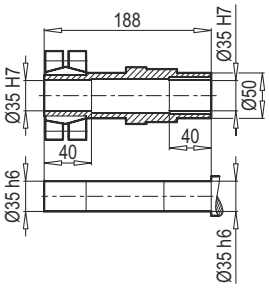

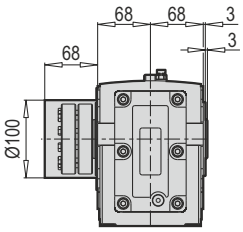

PKD G 1390 DG/Ç

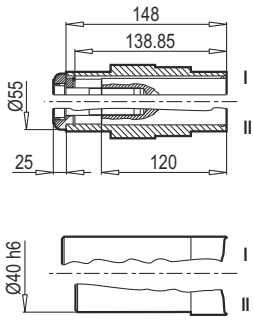

66-67

Konik sıktırma / Shrink disc / Schrumpfscheibe				Altıköşe başlı cıvata / Hexagonal screw / Sechskantschraube DIN 931 / DIN 933* 10.9Vz		
Tip / Type / Typ	M_{amax} (Nm)	s^{h6}	s^{f6}	dxl	Zs	MA (Nm)
KS 35/46	400	3.58	3.11	M6x35*	10	12

	63 M	71 M	80 M	90 S/L	100 L	112 M		
g	124	140	172	182	202	220		
g1	111	119	131	130	153	159		
k1	448	490	516	582	633	628		
k1Bre	500	550	586	590	717	728		
o	198	240	266	332	383	378		

Not : (...) İşaretli olan ölçüler motor markasına göre farklılık gösterir. / Note: The dimensions which have (...) sign vary depending on the motor. / Hinweis: (...) Die gekennzeichneten Maße unterscheiden sich je nach Motormarke.

PKD G 1390 IEC

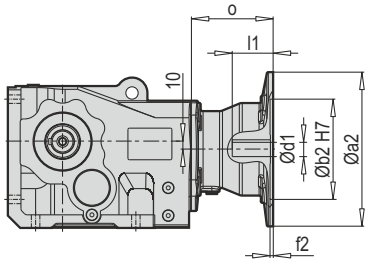

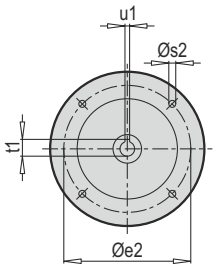

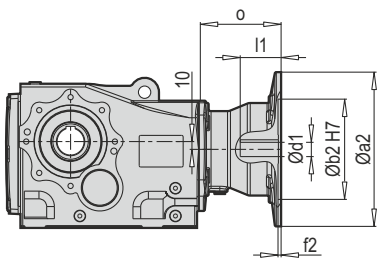

Tip / Type / Typ	IEC	Øa2	Øb2	Øe2	f2	Øs2	Ød1	l1	t1	u1	o
PKD G 1390	**63**	140	95	115	3.5	M8	11	23	12.8	4	85
	71	160	110	130	4.0	M8	14	30	16.3	5	89
	80	200	130	165	4.0	M10	19	40	21.8	6	105
	90	200	130	165	4.0	M10	24	50	27.3	8	105
	100	250	180	215	5.0	M12	28	60	31.3	8	130
	112	250	180	215	5.0	M12	28	60	31.3	8	130

~ Kg	
IEC	**PKD G 1390**
63	36
71	37
80	41
90	41
100	48
112	48

PKD G 1390 W

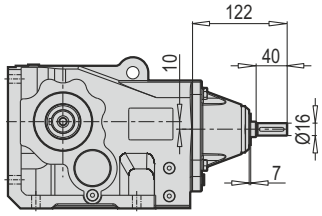

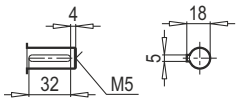

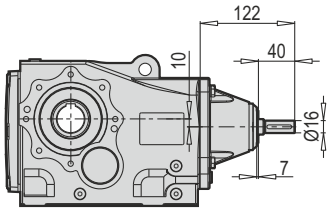

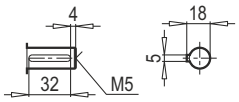

W ~ Kg	
PKD G 1390	41

PKD G 1390 PAM B5/B14

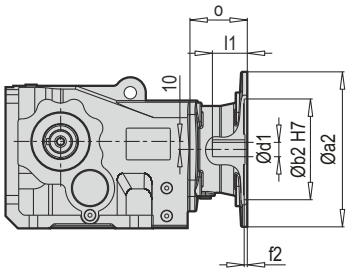

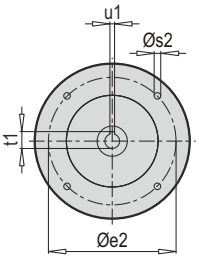

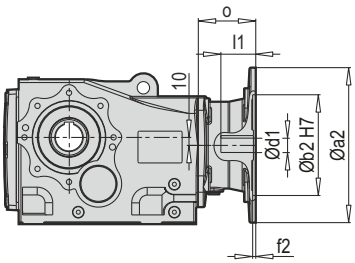

Tip / Type / Typ	PAM B5	Øa2	Øb2	Øe2	f2	Øs2	Ød1	l1	t1	u1	o
PKD G 1390	**63**	140	95	115	3.5	M8	11	23	12.8	4	85
	71	160	110	130	4.0	M8	14	30	16.3	5	55
	80	200	130	165	4.0	M10	19	40	21.8	6	74
	90	200	130	165	4.0	M10	24	50	27.3	8	74
	100	250	180	215	5.0	M12	28	60	31.3	8	131.5
	112	250	180	215	5.0	M12	28	60	31.3	8	131.5

~ Kg	
PAM B5	PKD G 1390
63	35
71	35
80	36
90	36
100	43
112	43

Tip / Type / Typ	PAM B14	Øa2	Øb2	Øe2	f2	Øs2	Ød1	l1	t1	u1	o
PKD G 1390	**63**	90	60	75	4.0	6	11	23	12.8	4	60
	71	105	70	85	4.0	7	14	30	16.3	5	55
	80	120	80	100	4.0	7	19	40	21.8	6	74
	90	140	95	115	4.0	9	24	50	27.3	8	74
	100	160	110	130	5.0	9	28	60	31.3	8	75
	112	160	110	130	5.0	9	28	60	31.3	8	75

~ Kg	
PAM B14	PKD G 1390
63	34
71	34
80	35
90	35
100	36
112	36

PKD G 1490 TMA

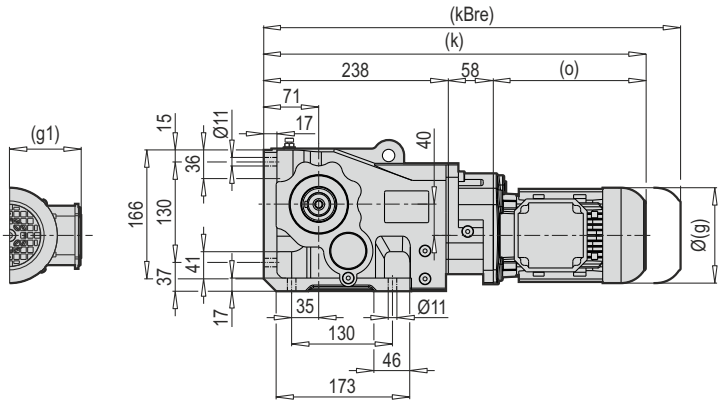

PKD G 1490 DA

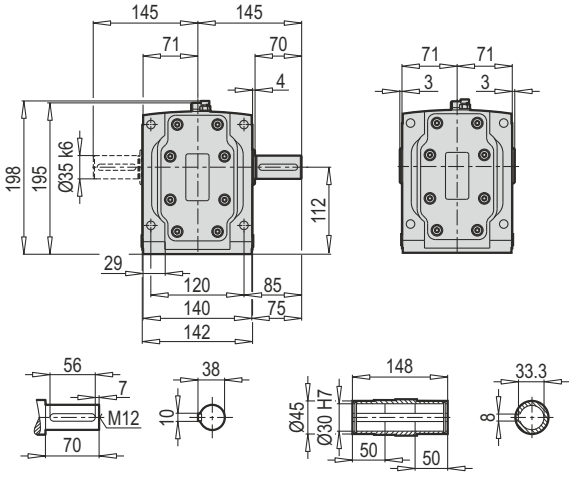

PKD G 1490 DG/B5

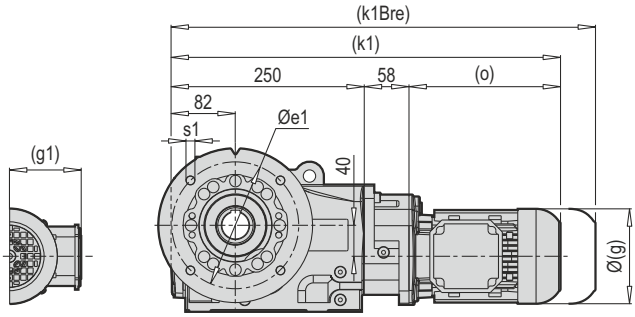

a1	b1	c1	e1	f1	s1
200	130	12	165	3.5	4x11

PKD G 1490 TMG/B5

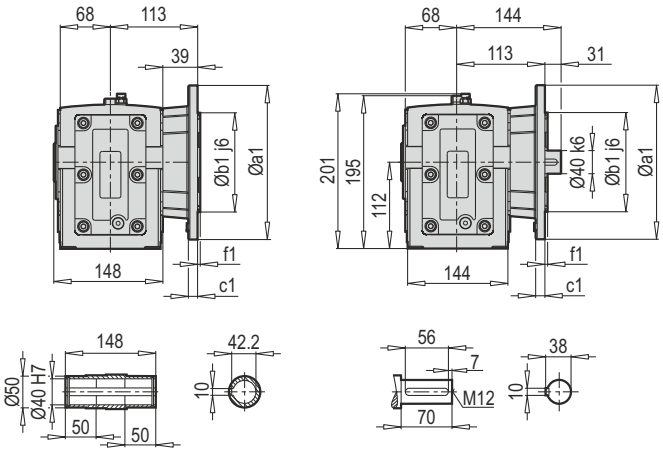

PKD G 1490 DA/Ç

66-67

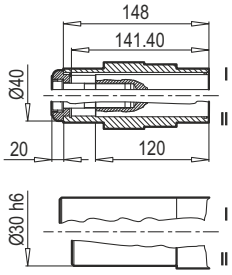

	63 M	71 M						
g	124	140						
g1	111	119						
k/k1	459/506	537/548						
kBre/k1Bre	547/558	597/608						
o	198	240						

Not : (...) İşaretli olan ölçüler motor markasına göre farklılık gösterir. / Note: The dimensions which have (...) sign vary depending on the motor. / Hinweis: (...) Die gekennzeichneten Maße unterscheiden sich je nach Motormarke.

PKD G 1490 DG/B14

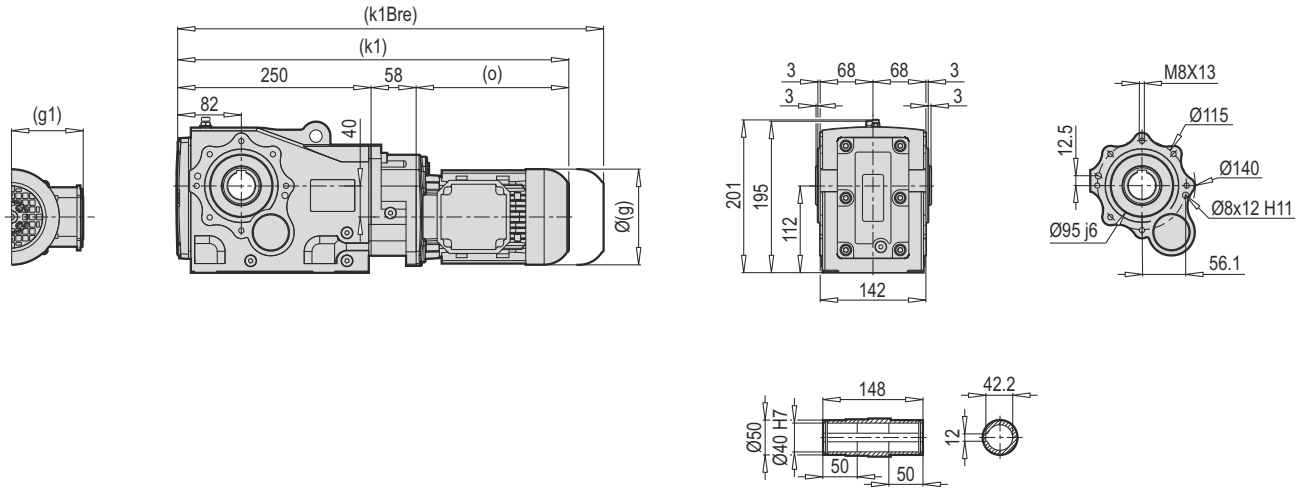

PKD G 1490 DG/DIN 5480

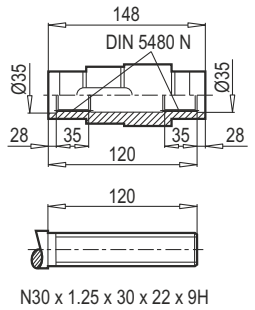

PKD G 1490 DG/KS

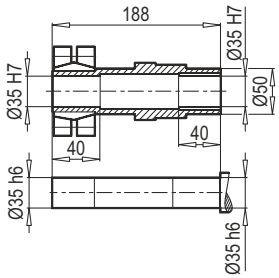

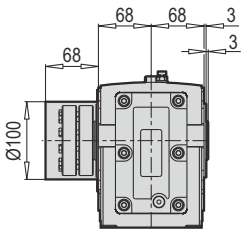

PKD G 1490 DG/Ç

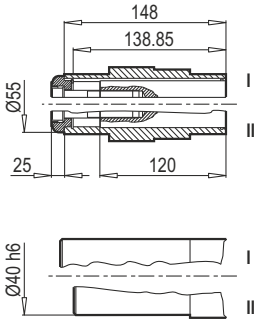

66-67

Konik sıktırma / Shrink disc / Schrumpfscheibe				Altıköşe başlı cıvata / Hexagonal screw / Sechskantschraube DIN 931 / DIN 933* 10.9Vz		
Tip / Type / Typ	M_{amax} (Nm)	s^{h6}	s^{f6}	dxl	Zs	MA (Nm)
KS 35/46	400	3.58	3.11	M6x35*	10	12

	63 M	71 M						
g	124	140						
g1	111	119						
k1	506	548						
k1Bre	558	608						
o	198	240						

Not : (...) İşaretli olan ölçüler motor markasına göre farklılık gösterir. / Note: The dimensions which have (...) sign vary depending on the motor. / Hinweis: (...) Die gekennzeichneten Maße unterscheiden sich je nach Motormarke.

PKD G 1490 IEC

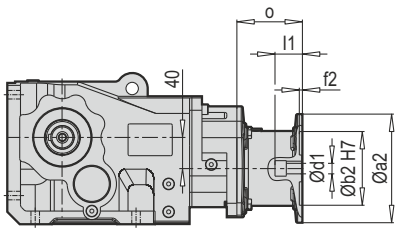

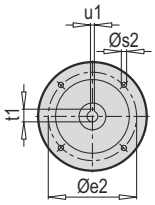

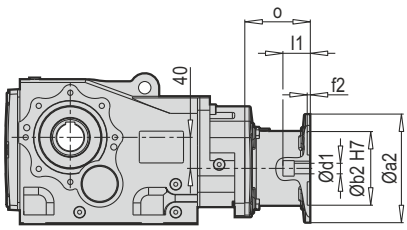

Tip / Type / Typ	IEC	Øa2	Øb2	Øe2	f2	Øs2	Ød1	l1	t1	u1	o
PKD G 1490	63	140	95	115	3.5	M8	11	23	12.8	4	85
	71	160	110	130	4.0	M8	14	30	16.3	5	89

~ Kg	
IEC	PKD G 1490
63	36
71	37

PKD G 1490 W

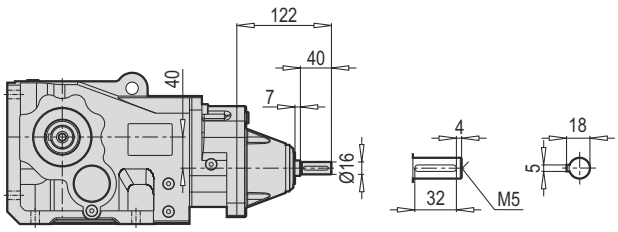

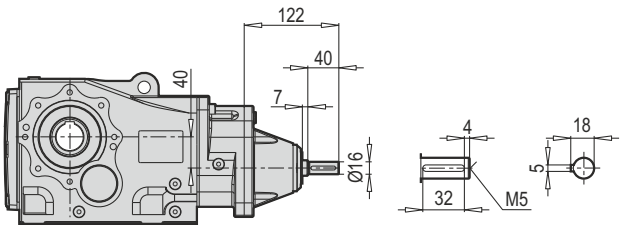

W ~ Kg	
PKD G 1490	42

PKD G 1490 PAM B5/B14

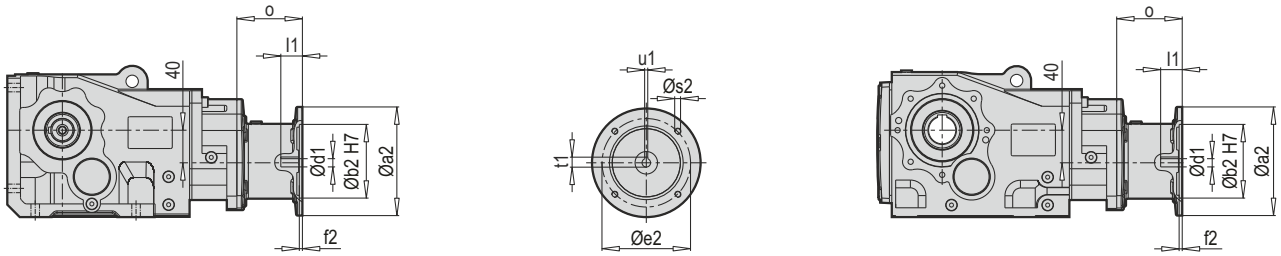

Tip / Type / Typ	PAM B5	Øa2	Øb2	Øe2	f2	Øs2	Ød1	l1	t1	u1	o
PKD G 1490	63	140	95	115	3.5	M8	11	23	12.8	4	85
	71	160	110	130	4.0	M8	14	30	16.3	5	55

~ Kg	
PAM B5	PKD G 1490
63	40
71	40

Tip / Type / Typ	PAM B14	Øa2	Øb2	Øe2	f2	Øs2	Ød1	l1	t1	u1	o
PKD G 1490	63	90	60	75	4.0	6	11	23	12.8	4	60
	71	105	70	85	4.0	7	14	30	16.3	5	55

~ Kg	
PAM B14	PKD G 1490
63	39
71	39

PKD 2390 TMA

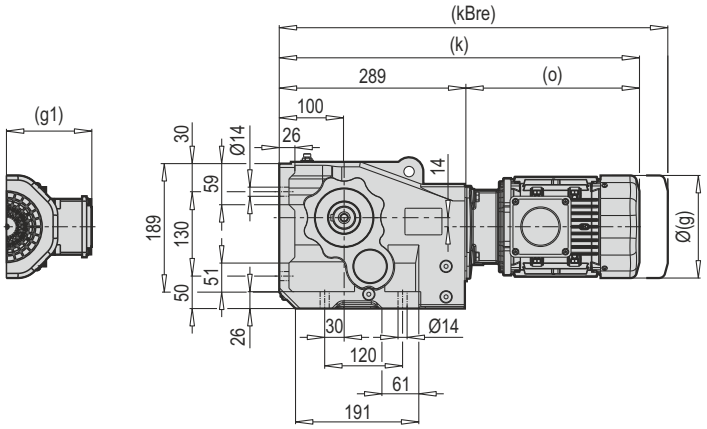

PKD 2390 DA

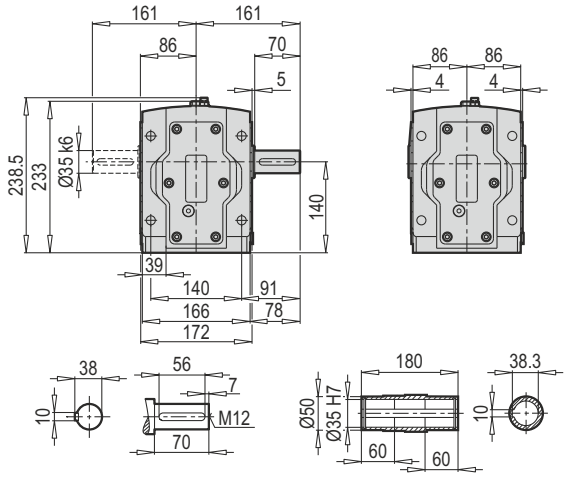

PKD 2390 DG/B5

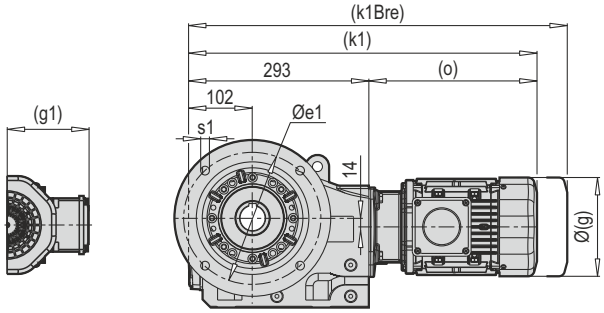

a1	b1	c1	e1	f1	s1
250	180	16	215	4	4x14

PKD 2390 TMG/B5

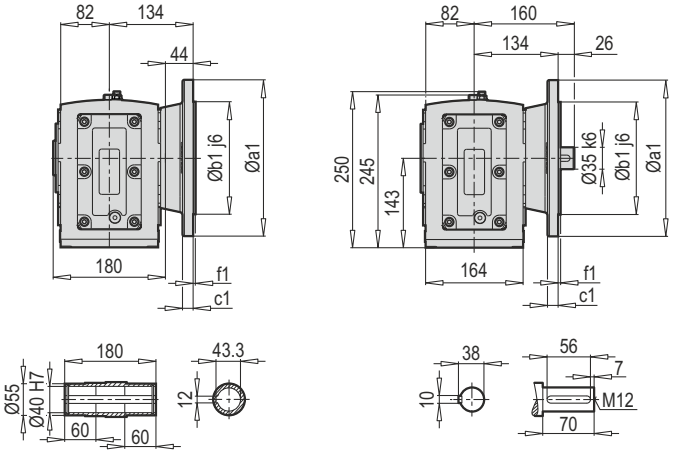

PKD 2390 DA/Ç

66-67

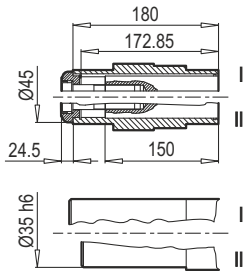

	63 M	71 M	80 M	90 S/L	100 L	112 M		
g	124	140	172	182	202	220		
g1	111	119	131	130	153	159		
k/k1	489/491	531/533	555/559	621/625	672/676	667/671		
kBre/k1Bre	541/543	591/593	625/629	629/633	756/760	767/771		
o	198	240	266	332	383	378		

Not : (...) İşaretli olan ölçüler motor markasına göre farklılık gösterir. / Note: The dimensions which have (...) sign vary depending on the motor. / Hinweis: (...) Die gekennzeichneten Maße unterscheiden sich je nach Motormarke.

PKD 2390 DG/B14

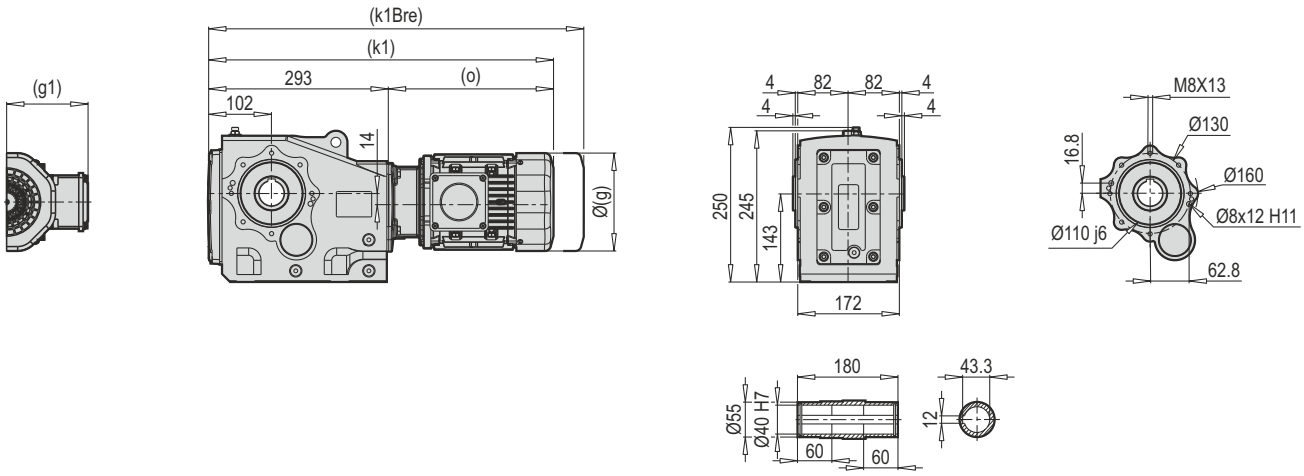

PKD 2390 DG/DIN 5480

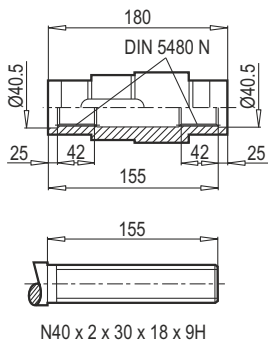

PKD 2390 DG/KS

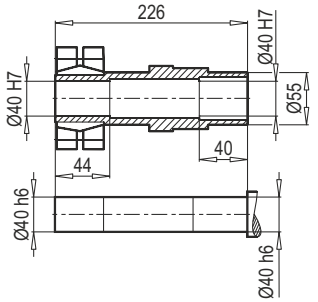

PKD 2390 DG/Ç

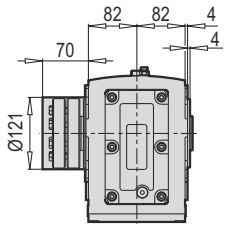

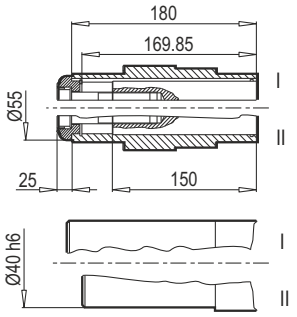

66-67

Konik sıktırma / Shrink disc / Schrumpfscheibe				Altıköşe başlı cıvata / Hexagonal screw / Sechskantschraube DIN 931 / DIN 933* 10.9Vz		
Tip / Type / Typ	M_{amax} (Nm)	s^{h6}	s^{f6}	dxl	Zs	MA (Nm)
KS 40/55	860	2.71	2.37	M8x40	8	30

	63 M	71 M	80 M	90 S/L	100 L	112 M		
g	124	140	172	182	202	220		
g1	111	119	131	130	153	159		
k1	491	533	559	625	676	671		
k1Bre	543	593	629	633	760	771		
o	198	240	266	332	383	378		

Not : (...) İşaretli olan ölçüler motor markasına göre farklılık gösterir. / Note: The dimensions which have (...) sign vary depending on the motor. / Hinweis: (...) Die gekennzeichneten Maße unterscheiden sich je nach Motormarke.

PKD 2390 IEC

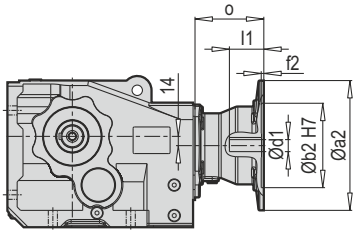

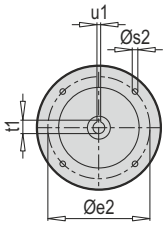

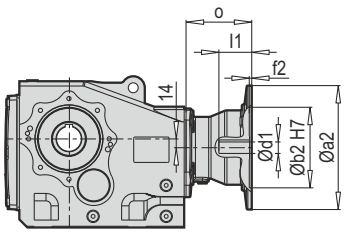

Tip / Type / Typ	IEC	Øa2	Øb2	Øe2	f2	Øs2	Ød1	l1	t1	u1	o
PKD 2390	**63**	140	95	115	3.5	M8	11	23	12.8	4	85
	71	160	110	130	4.0	M8	14	30	16.3	5	89
	80	200	130	165	4.0	M10	19	40	21.8	6	105
	90	200	130	165	4.0	M10	24	50	27.3	8	105
	100	250	180	215	5.0	M12	28	60	31.3	8	130
	112	250	180	215	5.0	M12	28	60	31.3	8	130

~ Kg	
IEC	**PKD 2390**
63	36
71	37
80	41
90	41
100	48
112	48

PKD 2390 W

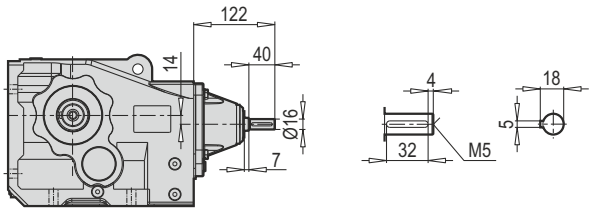

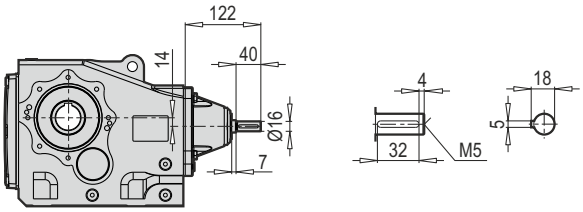

W ~ Kg	
PKD 2390	44

PKD 2390 PAM B5/B14

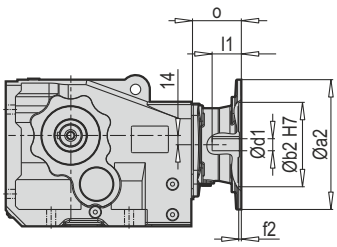

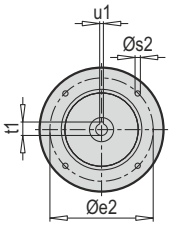

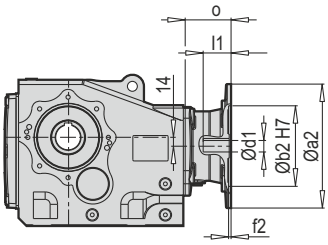

Tip / Type / Typ	PAM B5	Øa2	Øb2	Øe2	f2	Øs2	Ød1	l1	t1	u1	o
PKD 2390	**63**	140	95	115	3.5	M8	11	23	12.8	4	85
	71	160	110	130	4.0	M8	14	30	16.3	5	55
	80	200	130	165	4.0	M10	19	40	21.8	6	74
	90	200	130	165	4.0	M10	24	50	27.3	8	74
	100	250	180	215	5.0	M12	28	60	31.3	8	131.5
	112	250	180	215	5.0	M12	28	60	31.3	8	131.5

~ Kg	
PAM B5	PKD 2390
63	42
71	42
80	43
90	43
100	50
112	50

Tip / Type / Typ	PAM B14	Øa2	Øb2	Øe2	f2	Øs2	Ød1	l1	t1	u1	o
PKD 2390	**63**	90	60	75	4.0	6	11	23	12.8	4	60
	71	105	70	85	4.0	7	14	30	16.3	5	55
	80	120	80	100	4.0	7	19	40	21.8	6	74
	90	140	95	115	4.0	9	24	50	27.3	8	74
	100	160	110	130	5.0	9	28	60	31.3	8	75
	112	160	110	130	5.0	9	28	60	31.3	8	75

~ Kg	
PAM B14	PKD 2390
63	41
71	41
80	42
90	42
100	43
112	43

PKD 2490 TMA

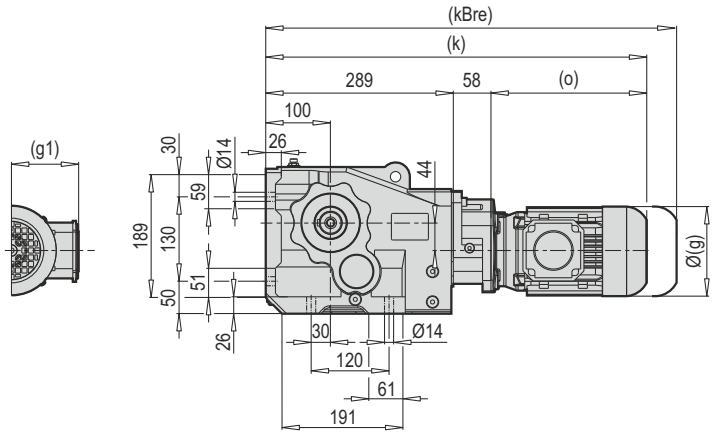

PKD 2490 DA

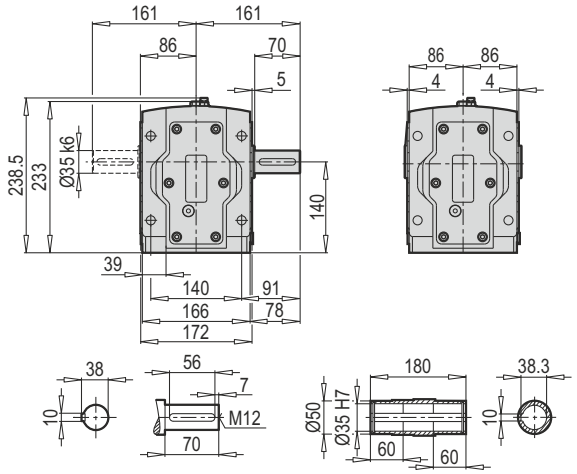

PKD 2490 DG/B5

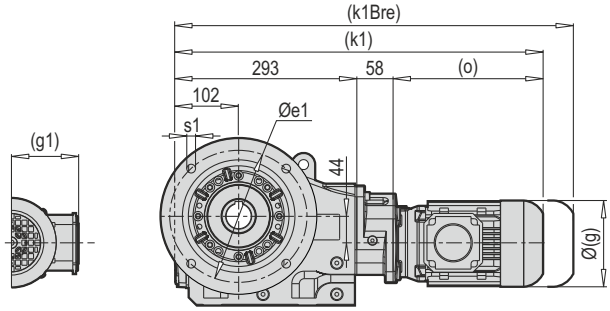

a1	b1	c1	e1	f1	s1
250	180	16	215	4	4x14

PKD 2490 TMG/B5

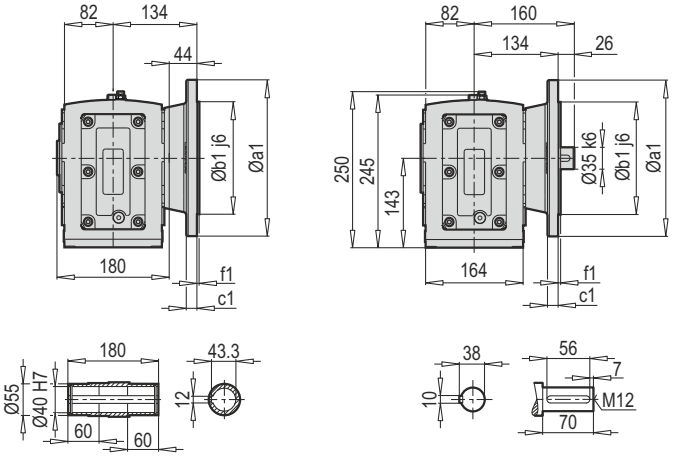

PKD 2490 DA/Ç

66-67

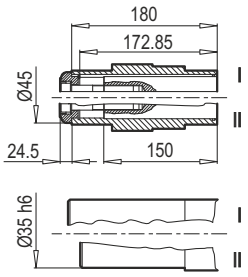

	63 M	71 M						
g	124	140						
g1	111	119						
k/k1	547/549	589/591						
kBre/k1Bre	599/601	649/651						
o	198	240						

Not : (...) İşaretli olan ölçüler motor markasına göre farklılık gösterir. / Note: The dimensions which have (...) sign vary depending on the motor. / Hinweis: (...) Die gekennzeichneten Maße unterscheiden sich je nach Motormarke.

PKD 2490 DG/B14

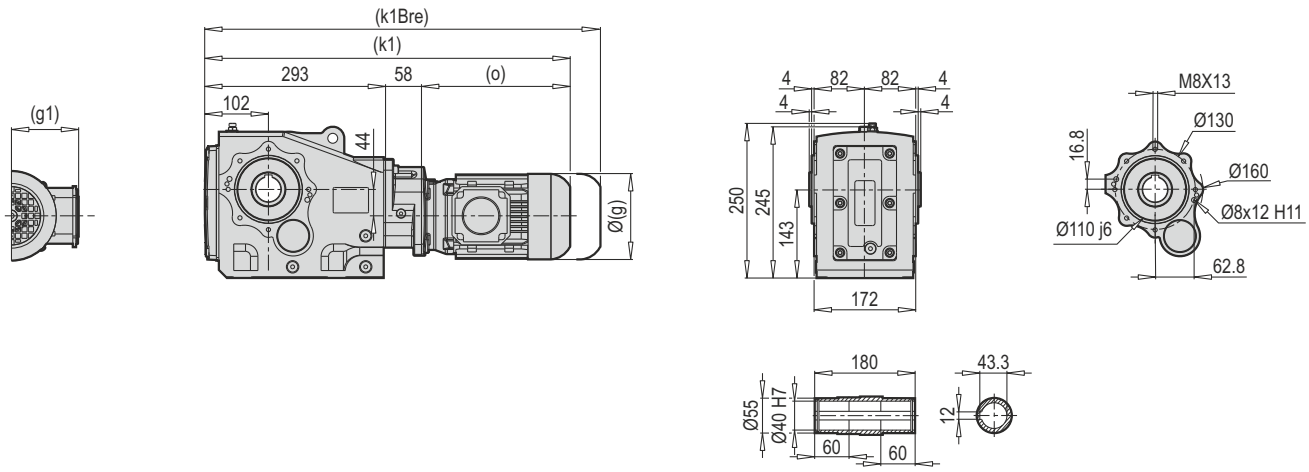

PKD 2490 DG/DIN 5480

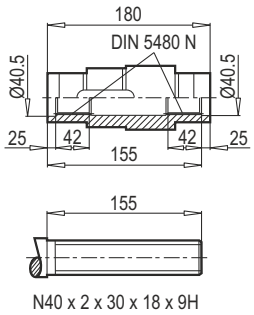

PKD 2490 DG/KS

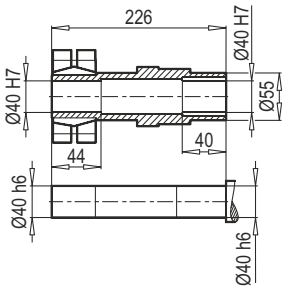

PKD 2490 DG/Ç

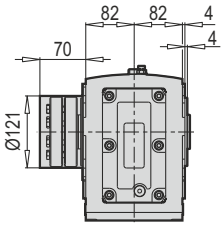

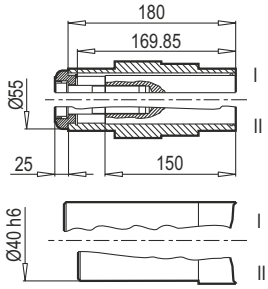

66-67

Konik sıktırma / Shrink disc / Schrumpfscheibe				Altıköşe başlı cıvata / Hexagonal screw / Sechskantschraube DIN 931 / DIN 933* 10.9Vz		
Tip / Type / Typ	M_{amax} (Nm)	s^{h6}	s^{f6}	dxl	Zs	MA (Nm)
KS 40/55	860	2.71	2.37	M8x40	8	30

	63 M	71 M						
g	124	140						
g1	111	119						
k1	549	591						
k1Bre	601	651						
o	198	240						

Not : (...) İşaretli olan ölçüler motor markasına göre farklılık gösterir. / Note: The dimensions which have (...) sign vary depending on the motor. / Hinweis: (...) Die gekennzeichneten Maße unterscheiden sich je nach Motormarke.

PKD 2490 IEC

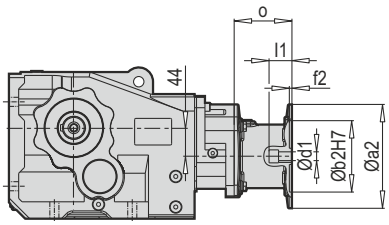

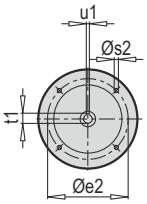

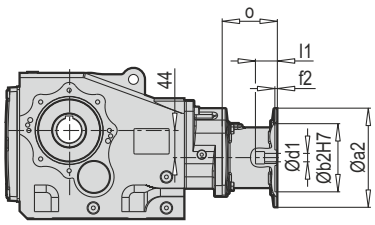

Tip / Type / Typ	IEC	Øa2	Øb2	Øe2	f2	Øs2	Ød1	l1	t1	u1	o
PKD 2490	63	140	95	115	3.5	M8	11	23	12.8	4	85
	71	160	110	130	4.0	M8	14	30	16.3	5	89

~ Kg	
IEC	PKD 2490
63	36
71	37

PKD 2490 W

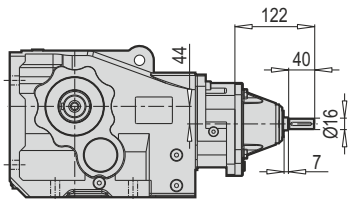

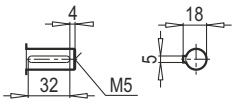

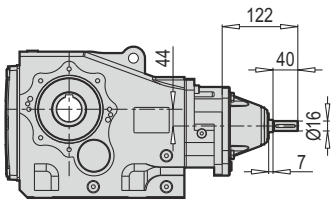

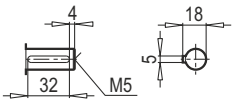

W ~ Kg	
PKD 2490	49

PKD 2490 PAM B5/B14

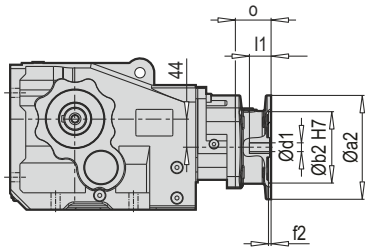

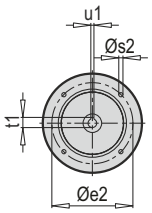

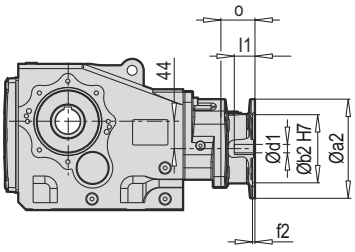

Tip / Type / Typ	PAM B5	Øa2	Øb2	Øe2	f2	Øs2	Ød1	l1	t1	u1	o
PKD 2490	63	140	95	115	3.5	M8	11	23	12.8	4	85
	71	160	110	130	4.0	M8	14	30	16.3	5	55

~ Kg	
PAM B5	PKD 2490
63	47
71	47

Tip / Type / Typ	PAM B14	Øa2	Øb2	Øe2	f2	Øs2	Ød1	l1	t1	u1	o
PKD 2490	63	90	60	75	4.0	6	11	23	12.8	4	60
	71	105	70	85	4.0	7	14	30	16.3	5	55

~ Kg	
PAM B14	PKD 2490
63	46
71	46

PKD 3390 TMA

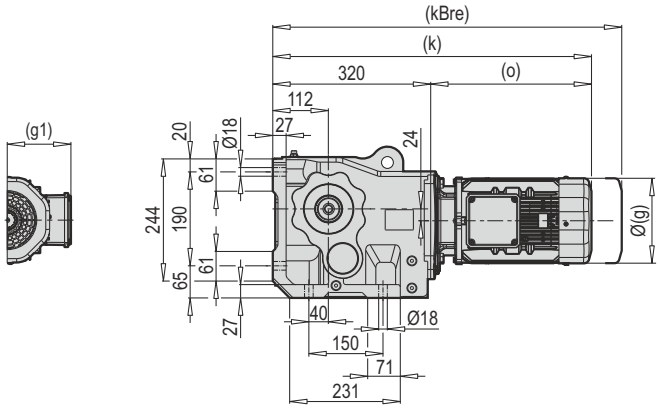

PKD 3390 DA

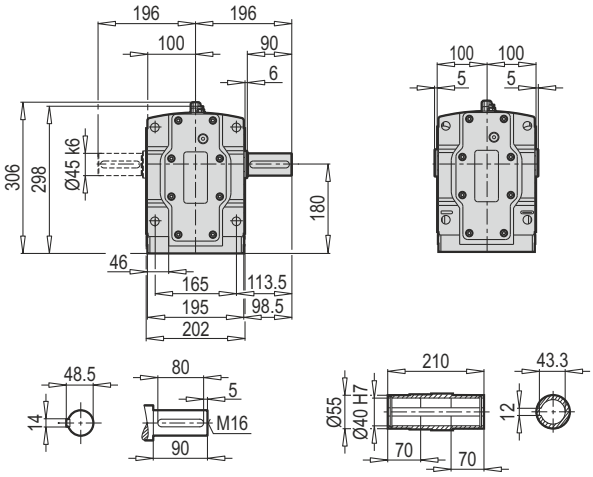

PKD 3390 DG/B5

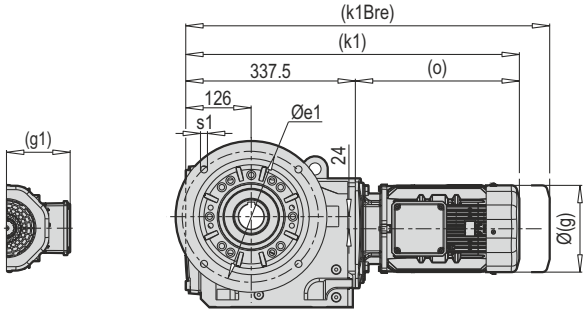

a1	b1	c1	e1	f1	s1
250	180	16	215	4	4x14
300	230	20	265	4	4x14

PKD 3390 TMG/B5

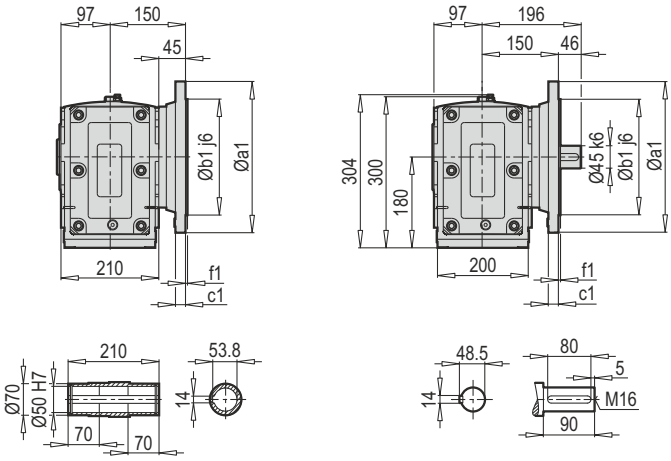

PKD 3390 DA/Ç

66-67

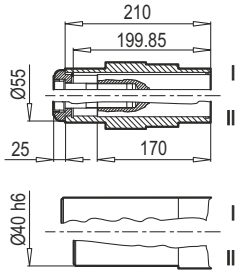

	71 M	80 M	90 S/L	100 L	112 M	132 S	132 M
g	140	172	182	202	220	271	271
g1	119	131	130	153	159	188	188
k/k1	556/570	580/598	646/663	697/715	692/709	767/784	767/784
kBre/k1Bre	616/630	650/668	714/732	781/799	792/809	866/884	894/911
o	236	260	326	377	372	447	447

Not : (...) İşaretli olan ölçüler motor markasına göre farklılık gösterir. / Note: The dimensions which have (...) sign vary depending on the motor. / Hinweis: (...) Die gekennzeichneten Maße unterscheiden sich je nach Motormarke.

PKD 3390 DG/B14

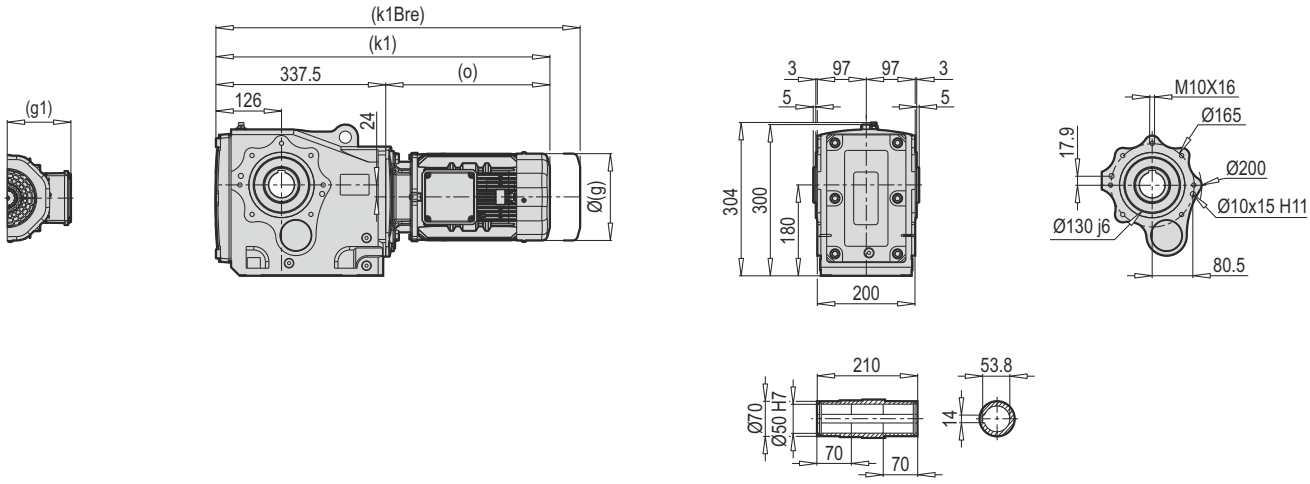

PKD 3390 DG/DIN 5480

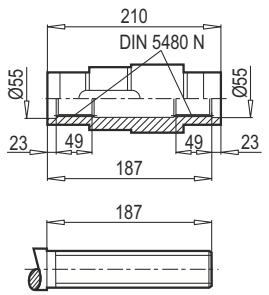

N50 x 2 x 30 x 24 x 9H

PKD 3390 DG/KS

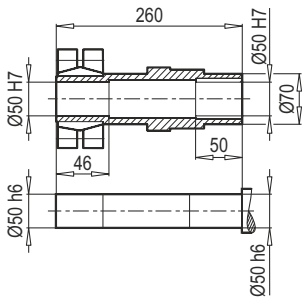

PKD 3390 DG/Ç

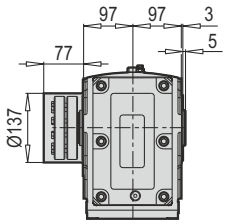

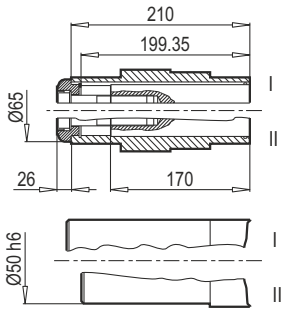

66-67

Konik sıktırma / Shrink disc / Schrumpfscheibe				Altıköşe başlı cıvata / Hexagonal screw / Sechskantschraube DIN 931 / DIN 933* 10.9Vz		
Tip / Type / Typ	M_{amax} (Nm)	s^{h6}	s^{f6}	dxl	Zs	MA (Nm)
KS 50/62	1550	2.83	2.63	M8x40	10	30

	71 M	80 M	90 S/L	100 L	112 M	132 S	132 M
g	140	172	182	202	220	271	271
g1	119	131	130	153	159	188	188
k1	570	598	663	715	709	784	784
k1Bre	630	668	732	799	809	884	911
o	236	260	326	377	372	447	447

Not : (...) İşaretli olan ölçüler motor markasına göre farklılık gösterir. / Note: The dimensions which have (...) sign vary depending on the motor. / Hinweis: (...) Die gekennzeichneten Maße unterscheiden sich je nach Motormarke.

PKD 3390 IEC

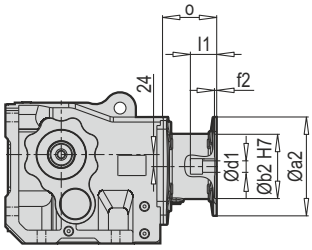

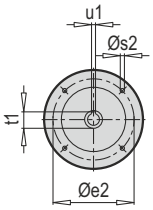

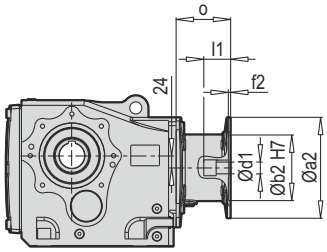

Tip / Type / Typ	IEC	Øa2	Øb2	Øe2	f2	Øs2	Ød1	l1	t1	u1	o
PKD 3390	**71**	160	110	130	4.0	M8	14	30	16.3	5	88
	80	200	130	165	4.0	M10	19	40	21.8	6	107
	90	200	130	165	4.0	M10	24	50	27.3	8	107
	100	250	180	215	5.0	M12	28	60	31.3	8	124
	112	250	180	215	5.0	M12	28	60	31.3	8	124
	132	300	230	265	5.0	M12	38	80	41.3	10	156

~ Kg	
IEC	PKD 3390
71	69
80	73
90	73
100	77
112	77
132	86

PKD 3390 W

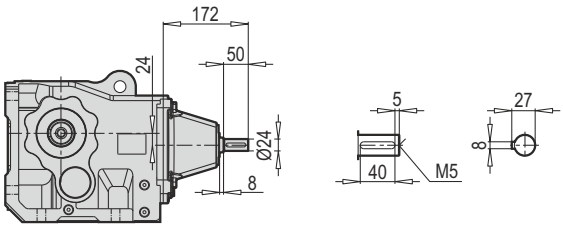

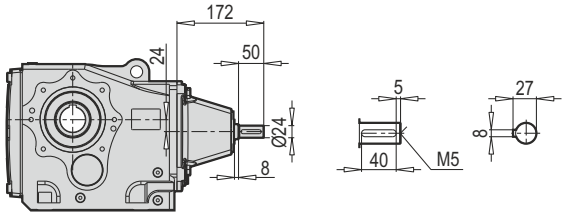

W ~ Kg	
PKD 3390	71

PKD 3390 PAM B5/B14

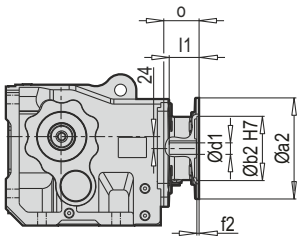

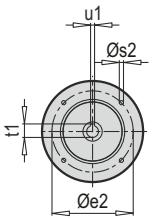

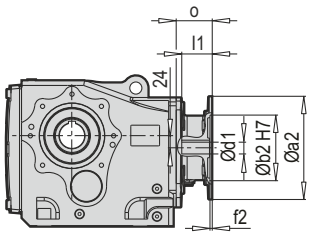

Tip / Type / Typ	PAM B5	Øa2	Øb2	Øe2	f2	Øs2	Ød1	l1	t1	u1	o
PKD 3390	71	160	110	130	4.0	M8	14	30	16.3	5	88
	80	200	130	165	4.0	M10	19	40	21.8	6	72
	90	200	130	165	4.0	M10	24	50	27.3	8	72
	100	250	180	215	5.0	M12	28	60	31.3	8	75
	112	250	180	215	5.0	M12	28	60	31.3	8	75
	132	300	230	265	5.0	M12	38	80	41.3	10	94

~ Kg	
PAM B5	PKD 3390
71	65
80	66
90	66
100	67
112	67
132	77

Tip / Type / Typ	PAM B14	Øa2	Øb2	Øe2	f2	Øs2	Ød1	l1	t1	u1	o
PKD 3390	71	105	70	85	4.0	7	14	30	16.3	5	88
	80	120	80	100	4.0	7	19	40	21.8	6	72
	90	140	95	115	4.0	9	24	50	27.3	8	72
	100	160	110	130	5.0	9	28	60	31.3	8	75
	112	160	110	130	5.0	9	28	60	31.3	8	75
	132	200	130	165	5.0	11	38	80	41.3	10	94

~ Kg	
PAM B14	PKD 3390
71	63
80	64
90	64
100	66
112	66
132	70

PKD 3490 TMA

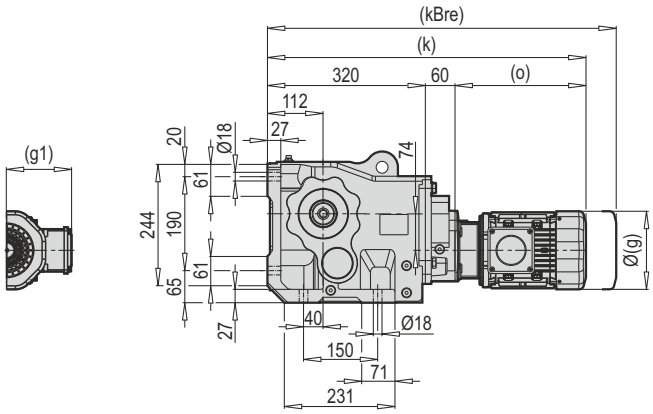

PKD 3490 DA

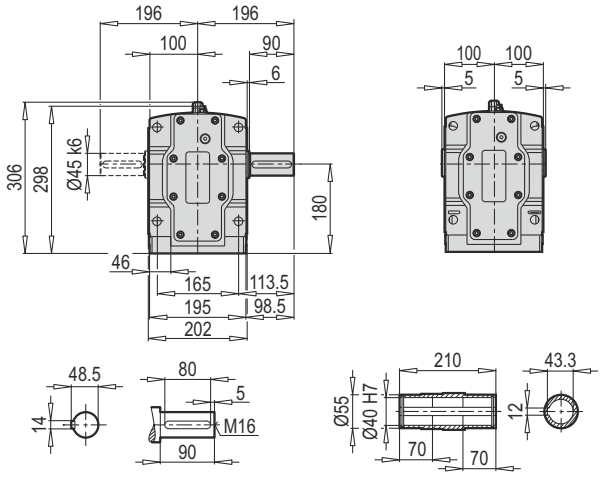

PKD 3490 DG/B5

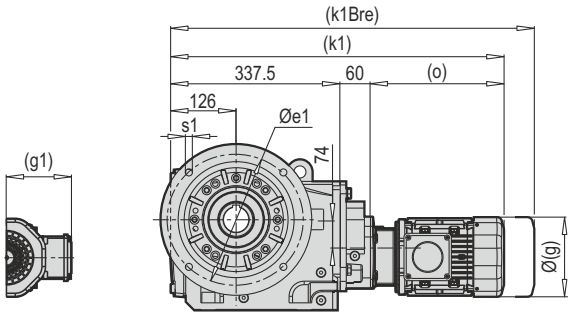

a1	b1	c1	e1	f1	s1
250	180	16	215	4	4x14
300	230	20	265	4	4x14

PKD 3490 TMG/B5

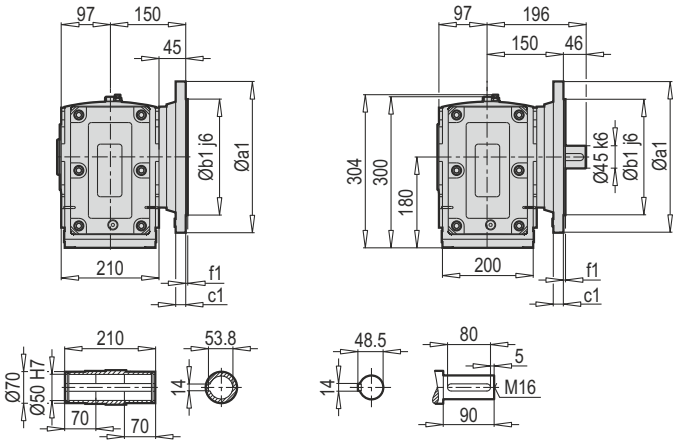

PKD 3490 DA/Ç

66-67

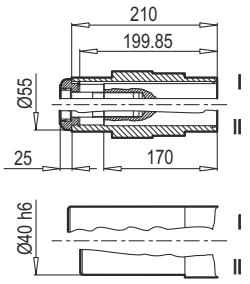

	63 M	71 M	80 M	90 S/L				
g	124	140	172	182				
g1	111	119	131	130				
k/k1	578/592	620/634	580/598	646/663				
kBre/k1Bre	630/644	680/694	650/668	714/732				
o	198	240	260	326				

Not : (...) İşaretli olan ölçüler motor markasına göre farklılık gösterir. / Note: The dimensions which have (...) sign vary depending on the motor. / Hinweis: (...) Die gekennzeichneten Maße unterscheiden sich je nach Motormarke.

PKD 3490 DG/B14

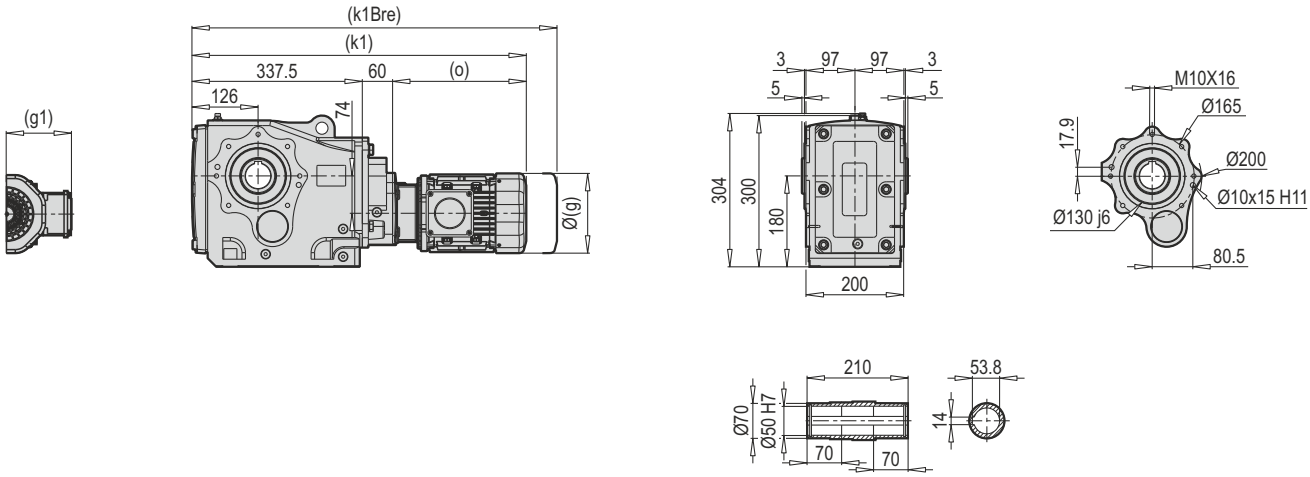

PKD 3490 DG/DIN 5480

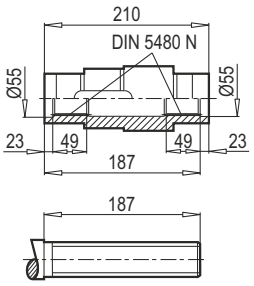

N50 x 2 x 30 x 24 x 9H

PKD 3490 DG/KS

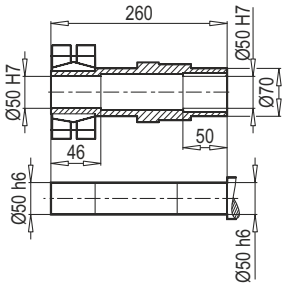

PKD 3490 DG/Ç

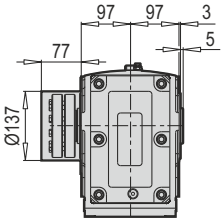

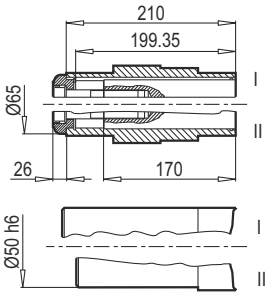

66-67

Konik sıktırma / Shrink disc / Schrumpfscheibe				Altıköşe başlı cıvata / Hexagonal screw / Sechskantschraube DIN 931 / DIN 933* 10.9Vz		
Tip / Type / Typ	M_{amax} (Nm)	s^{h6}	s^{f6}	dxl	Zs	MA (Nm)
KS 50/62	1550	2.83	2.63	M8x40	10	30

	63 M	71 M	80 M	90 S/L				
g	124	140	172	182				
g1	111	119	131	130				
k1	592	634	598	663				
k1Bre	644	694	668	732				
o	198	240	260	326				

Not : (...) İşaretli olan ölçüler motor markasına göre farklılık gösterir. / Note: The dimensions which have (...) sign vary depending on the motor. / Hinweis: (...) Die gekennzeichneten Maße unterscheiden sich je nach Motormarke.

PKD 3490 IEC

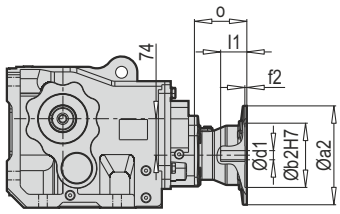

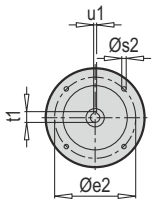

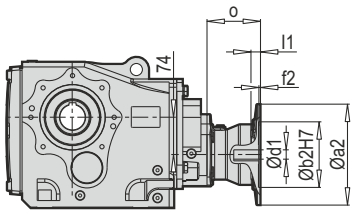

Tip / Type / Typ	IEC	Øa2	Øb2	Øe2	f2	Øs2	Ød1	l1	t1	u1	o
PKD 3490	**63**	140	95	115	3.5	M8	11	23	12.8	4	85
	71	160	110	130	4.0	M8	14	30	16.3	5	89
	80	200	130	165	4.0	M10	19	40	21.8	6	105
	90	200	130	165	4.0	M10	24	50	27.3	8	105

~ Kg	
IEC	**PKD 3490**
63	74
71	75
80	78
90	78

PKD 3490 W

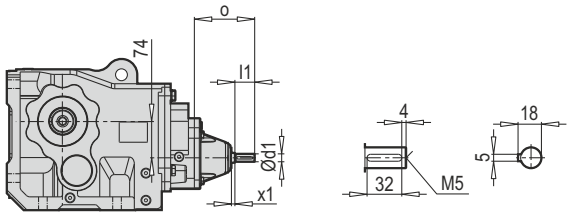

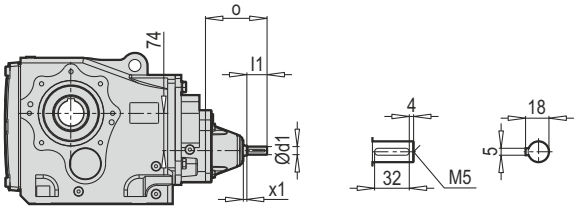

W ~ Kg	
PKD 3490	73

PKD 3490 PAM B5/B14

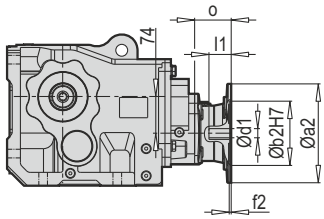

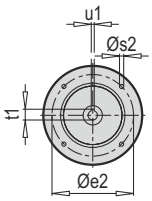

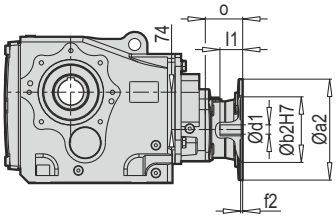

Tip / Type / Typ	PAM B5	Øa2	Øb2	Øe2	f2	Øs2	Ød1	l1	t1	u1	o
PKD 3490	**63**	140	95	115	3.5	M8	11	23	12.8	4	85
	71	160	110	130	4.0	M8	14	30	16.3	5	55
	80	200	130	165	4.0	M10	19	40	21.8	6	74
	90	200	130	165	4.0	M10	24	50	27.3	8	74

~ Kg	
PAM B5	PKD 3490
63	70
71	70
80	71
90	71

Tip / Type / Typ	PAM B14	Øa2	Øb2	Øe2	f2	Øs2	Ød1	l1	t1	u1	o
PKD 3490	**63**	90	60	75	4.0	6	11	23	12.8	4	60
	71	105	70	85	4.0	7	14	30	16.3	5	55
	80	120	80	100	4.0	7	19	40	21.8	6	74
	90	140	95	115	4.0	9	24	50	27.3	8	74

~ Kg	
PAM B14	PKD 3490
63	69
71	69
80	70
90	70

PKD 4390 TMA

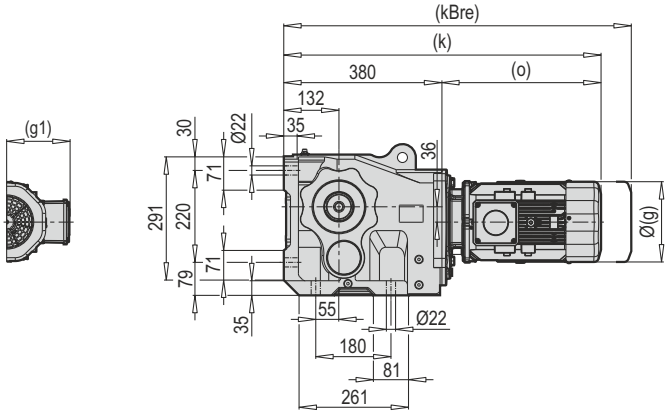

PKD 4390 DA

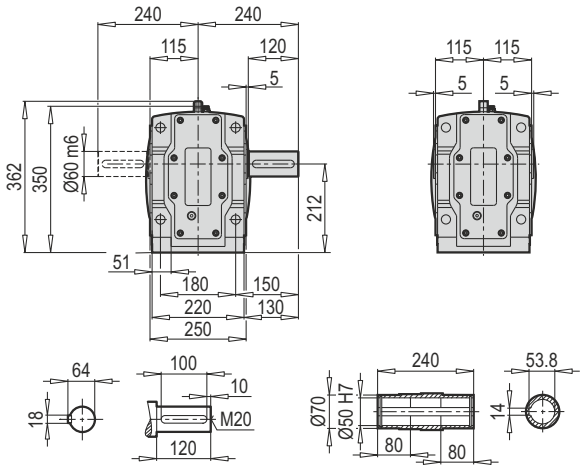

PKD 4390 DG/B5

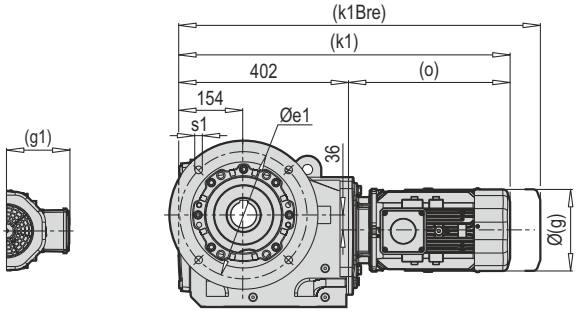

a1	b1	c1	e1	f1	s1
350	250	20	300	5	4x18

PKD 4390 TMG/B5

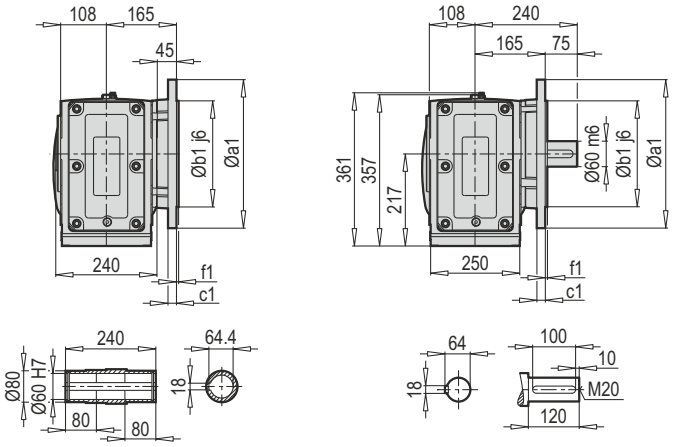

PKD 4390 DA/Ç

66-67

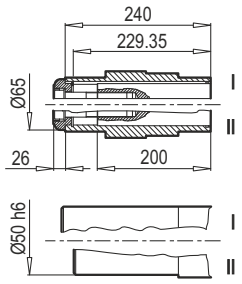

	90 S/L	100 L	112 M	132 S	132 M	160 M/L		
g	182	202	220	271	271	322		
g1	130	153	159	188	188	214		
k/k1	710/732	761/783	760/782	822/844	822/844	910/932		
kBre/k1Bre	778/800	845/867	860/882	921/943	941/963	1015/1037		
o	330	381	380	442	442	530		

Not : (...) İşaretli olan ölçüler motor markasına göre farklılık gösterir. / Note: The dimensions which have (...) sign vary depending on the motor. / Hinweis: (...) Die gekennzeichneten Maße unterscheiden sich je nach Motormarke.

PKD 4390 DG/B14

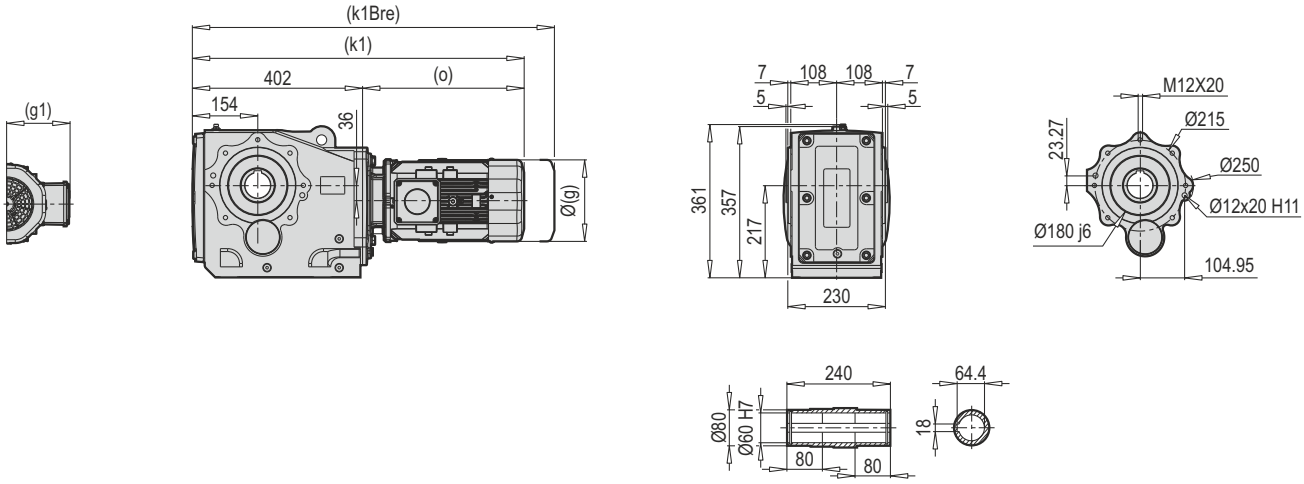

PKD 4390 DG/DIN 5480

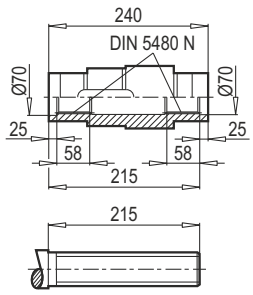

N65 x 2 x 30 x 31 x 9H

PKD 4390 DG/KS

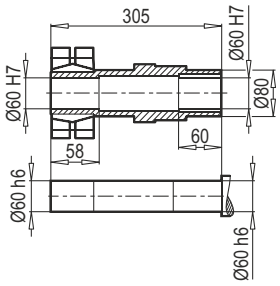

PKD 4390 DG/Ç

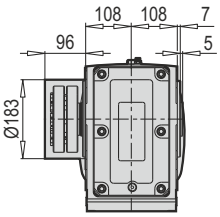

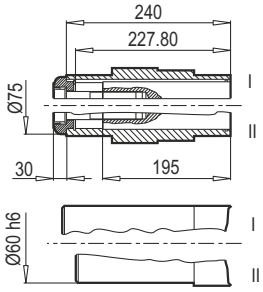

66-67

Konik sıktırma / Shrink disc / Schrumpfscheibe				Altıköşe başlı cıvata / Hexagonal screw / Sechskantschraube DIN 931 / DIN 933* 10.9Vz		
Tip / Type / Typ	M_{amax} (Nm)	s^{h6}	s^{f6}	dxl	Zs	MA (Nm)
KS 60/76	2800	2.90	2.69	M10x50	10	59

	90 S/L	100 L	112 M	132 S	132 M	160 M/L		
g	182	202	220	271	271	322		
g1	130	153	159	188	188	214		
k1	732	783	782	844	844	932		
k1Bre	800	867	882	943	963	1037		
o	330	381	380	442	442	530		

Not : (...) İşaretli olan ölçüler motor markasına göre farklılık gösterir. / Note: The dimensions which have (...) sign vary depending on the motor. / Hinweis: (...) Die gekennzeichneten Maße unterscheiden sich je nach Motormarke.

PKD 4390 IEC

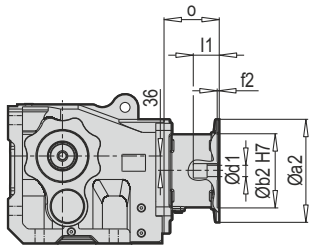

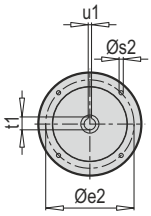

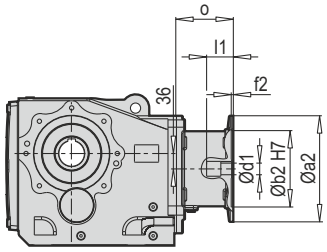

Tip / Type / Typ	IEC	Øa2	Øb2	Øe2	f2	Øs2	Ød1	l1	t1	u1	o
PKD 4390	**90**	200	130	165	4.0	M10	24	50	27.3	8	109
	100	250	180	215	5.0	M12	28	60	31.3	8	133
	112	250	180	215	5.0	M12	28	60	31.3	8	133
	132	300	230	265	5.0	M12	38	80	41.3	10	190
	160	350	250	300	6.0	M16	42	110	45.3	1210	194

~ Kg	
IEC	**PKD 4390**
90	126
100	133
112	133
132	148
160	149

PKD 4390 W

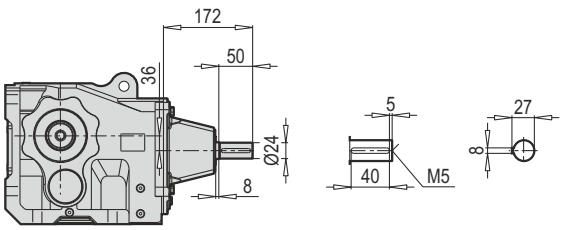

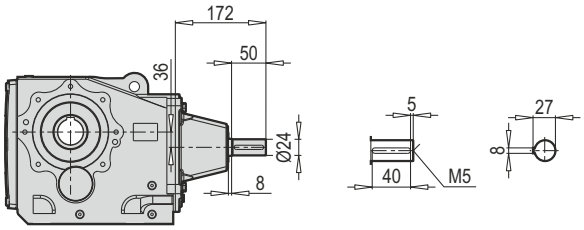

W ~ Kg	
PKD 4390	131

PKD 4390 PAM B5/B14

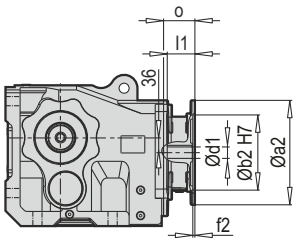

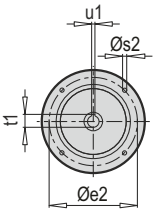

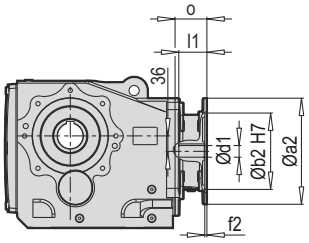

Tip / Type / Typ	PAM B5	Øa2	Øb2	Øe2	f2	Øs2	Ød1	l1	t1	u1	o
PKD 4390	**90**	200	130	165	4.0	M10	24	50	27.3	8	72
	100	250	180	215	5.0	M12	28	60	31.3	8	75
	112	250	180	215	5.0	M12	28	60	31.3	8	75
	132	300	230	265	5.0	M12	38	80	41.3	10	94
	160	350	250	300	6.0	M16	42	110	45.3	12	120

~ Kg	
PAM B5	PKD 4390
90	116
100	117
112	117
132	126
160	134

Tip / Type / Typ	PAM B14	Øa2	Øb2	Øe2	f2	Øs2	Ød1	l1	t1	u1	o
PKD 4390	**90**	140	95	115	4.0	9	24	50	27.3	8	72
	100	160	110	130	5.0	9	28	60	31.3	8	75
	112	160	110	130	5.0	9	28	60	31.3	8	75
	132	200	130	165	5.0	11	38	80	41.3	10	94

~ Kg	
PAM B14	PKD 4390
90	115
100	116
112	116
132	121

PKD 4490 TMA

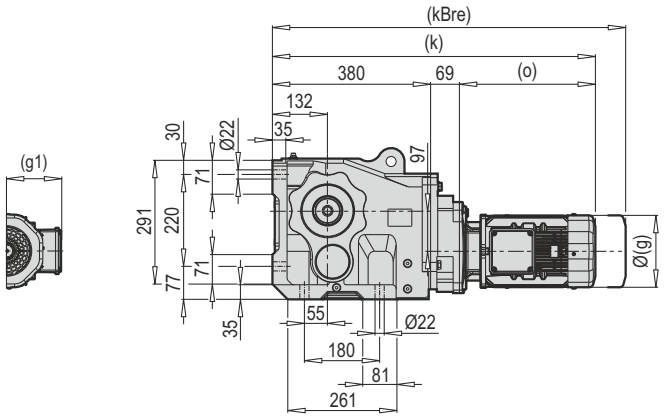

PKD 4490 DA

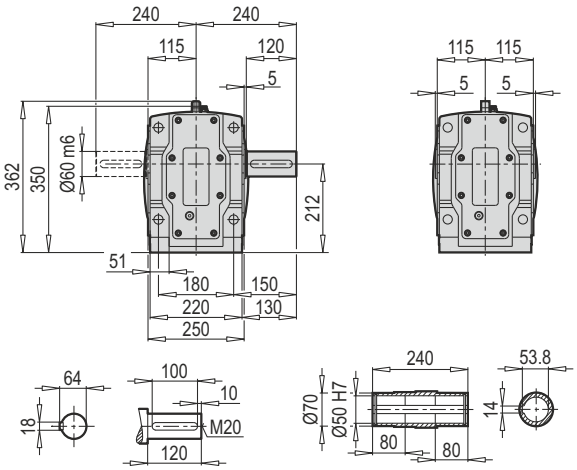

PKD 4490 DG/B5

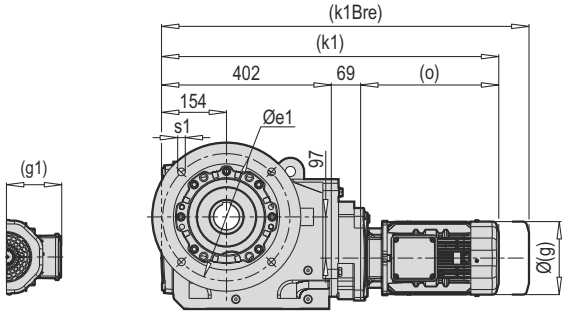

a1	b1	c1	e1	f1	s1
350	250	20	300	5	4x18

PKD 4490 TMG/B5

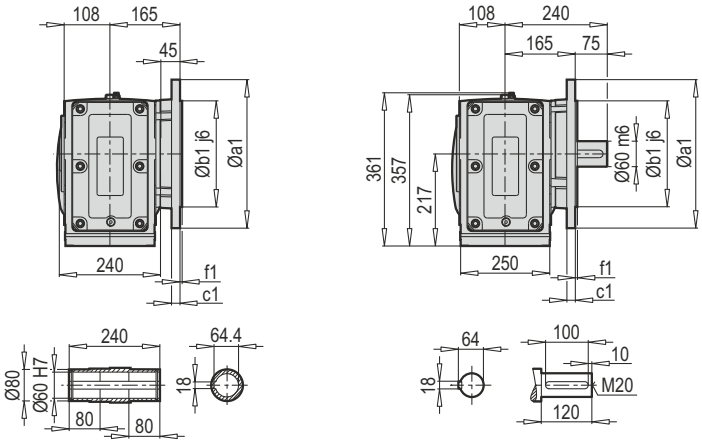

PKD 4490 DA/Ç

66-67

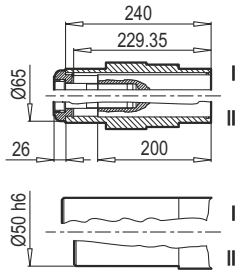

	71 M	80 M	90 S/L	100 L	112 M	
g	140	159	182	202	220	
g1	119	127	130	153	158.5	
k/k1	685/707	711/733	710/732	761/783	752/776	
kBre/k1Bre	745/767	773/795	778/800	745/867	852/874	
o	236	262	330	381	371.5	

Not : (...) İşaretli olan ölçüler motor markasına göre farklılık gösterir. / Note: The dimensions which have (...) sign vary depending on the motor. / Hinweis: (...) Die gekennzeichneten Maße unterscheiden sich je nach Motormarke.

PKD 4490 DG / B14

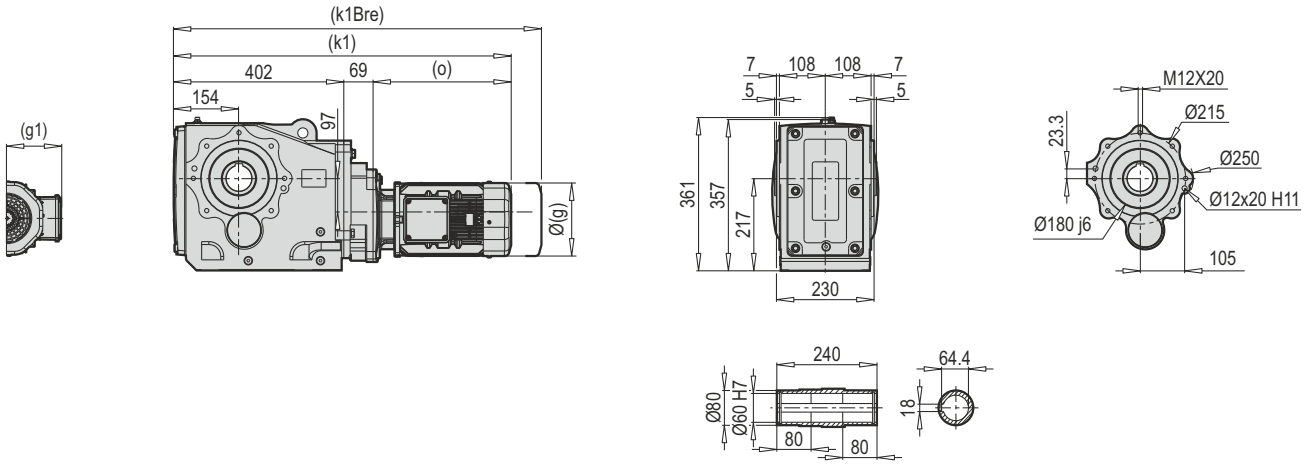

PKD 4490 DG/DIN 5480

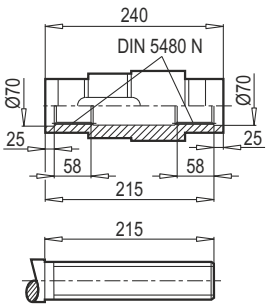

N65 x 2 x 30 x 31 x 9H

PKD 4490 DG/KS

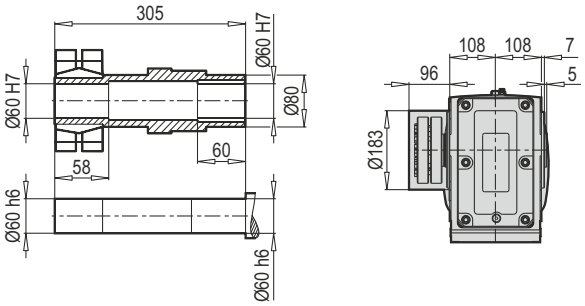

PKD 4490 DG/Ç

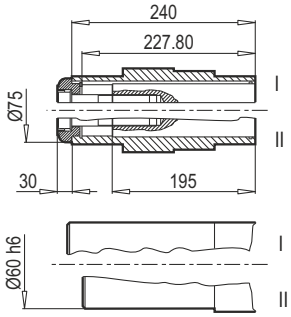

66-67

Konik sıktırma / Shrink disc / Schrumpfscheibe				Altıköşe başlı cıvata / Hexagonal screw / Sechskantschraube DIN 931 / DIN 933* 10.9Vz		
Tip / Type / Typ	M_{amax} (Nm)	s^{h6}	s^{f6}	dxl	Zs	MA (Nm)
KS 60/76	2800	2.90	2.69	M10x50	10	59

	71 M	80 M	90 S/L	100 L	112 M			
g	140	159	182	202	220			
g1	119	127	130	153	158.5			
k1	707	733	732	783	776			
k1Bre	767	795	800	867	874			
o	236	262	330	381	371.5			

Not : (...) İşaretli olan ölçüler motor markasına göre farklılık gösterir. / Note: The dimensions which have (...) sign vary depending on the motor. / Hinweis: (...) Die gekennzeichneten Maße unterscheiden sich je nach Motormarke.

PKD 4490 IEC

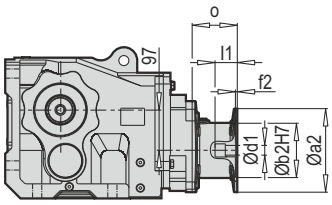

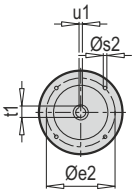

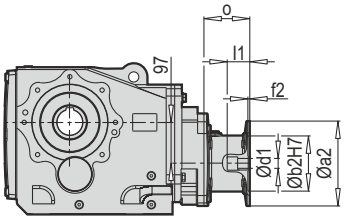

Tip / Type / Typ	IEC	Øa2	Øb2	Øe2	f2	Øs2	Ød1	l1	t1	u1	o
PKD 4490	**71**	160	110	130	4.0	M8	14	30	16.3	5	89
	80	200	130	165	4.0	M10	19	40	21.8	6	107
	90	200	130	165	4.0	M10	24	50	27.3	8	107
	100	250	180	215	5.0	M12	28	60	31.3	8	124
	112	250	180	215	5.0	M12	28	60	31.3	8	124

~ Kg	
IEC	**PKD 4490**
71	134
80	139
90	139
100	143
112	143

PKD 4490 W

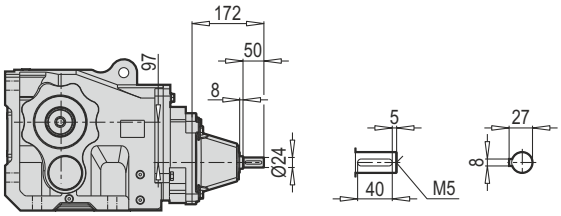

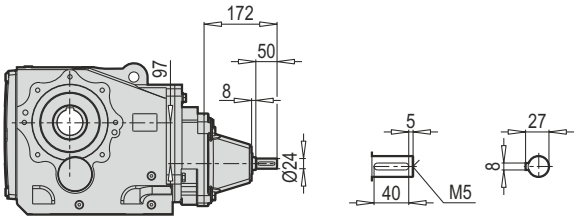

W ~ Kg	
PKD 4490	137

PKD 4490 PAM B5/B14

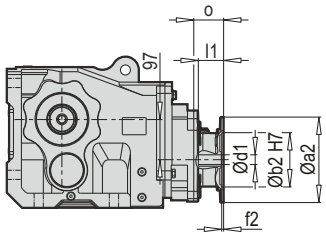

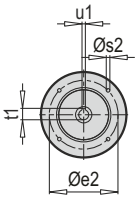

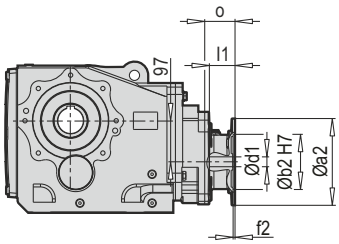

Tip / Type / Typ	PAM B5	Øa2	Øb2	Øe2	f2	Øs2	Ød1	l1	t1	u1	o
PKD 4490	**71**	160	110	130	4.0	M8	14	30	16.3	5	88
	80	200	130	165	4.0	M10	19	40	21.8	6	72
	90	200	130	165	4.0	M10	24	50	27.3	8	72
	100	250	180	215	5.0	M12	28	60	31.3	8	75
	112	250	180	215	5.0	M12	28	60	31.3	8	75

~ Kg	
PAM B5	PKD 4490
71	127
80	128
90	128
100	129
112	129

Tip / Type / Typ	PAM B14	Øa2	Øb2	Øe2	f2	Øs2	Ød1	l1	t1	u1	o
PKD 4490	**71**	105	70	85	4.0	7	14	30	16.3	5	88
	80	120	80	100	4.0	7	19	40	21.8	6	72
	90	140	95	115	4.0	9	24	50	27.3	8	72
	100	160	110	130	5.0	9	28	60	31.3	8	75
	112	160	110	130	5.0	9	28	60	31.3	8	75

~ Kg	
PAM B14	PKD 4490
71	125
80	126
90	126
100	128
112	128

PKD 5390 TMA

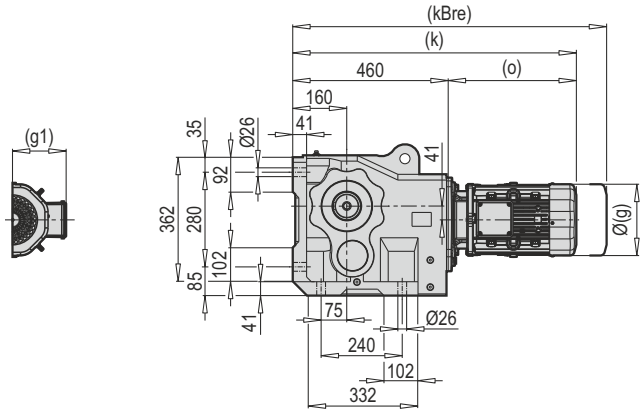

PKD 5390 DA

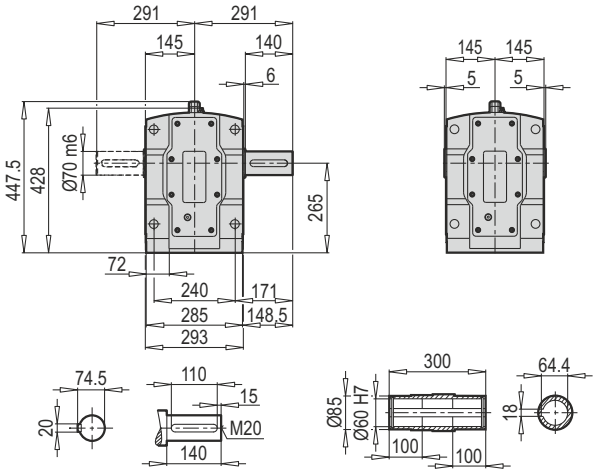

PKD 5390 DG/B5

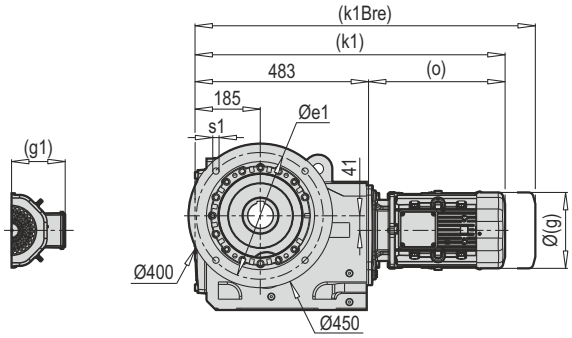

a1	b1	c1	e1	f1	s1
400	300	20	350	5	4x18
450	350	22	400	5	8x18

PKD 5390 TMG/B5

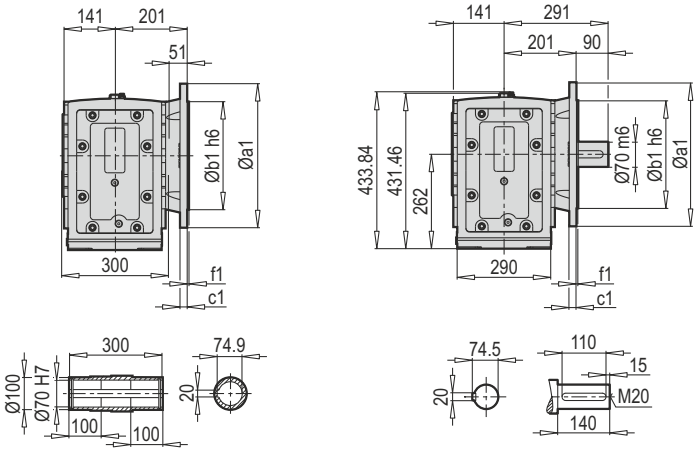

PKD 5390 DA/Ç

66-67

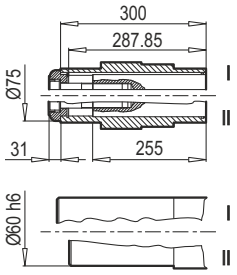

	90 S/L	100 L	112 M	132 S	132 M	160 M/L	180 M/L
g	182	202	220	271	271	322	363
g1	130	153	159	188	188	214	249
k/k1	794/813	841/864	840/863	902/925	902/925	990/1013	1084/1107
kBre/k1Bre	858/881	925/948	940/963	1001/1024	1021/1044	1095/1118	1185/1208
o	330	381	380	442	442	500	624

Not : (...) İşaretli olan ölçüler motor markasına göre farklılık gösterir. / Note: The dimensions which have (...) sign vary depending on the motor. / Hinweis: (...) Die gekennzeichneten Maße unterscheiden sich je nach Motormarke.

PKD 5390 DG/B14

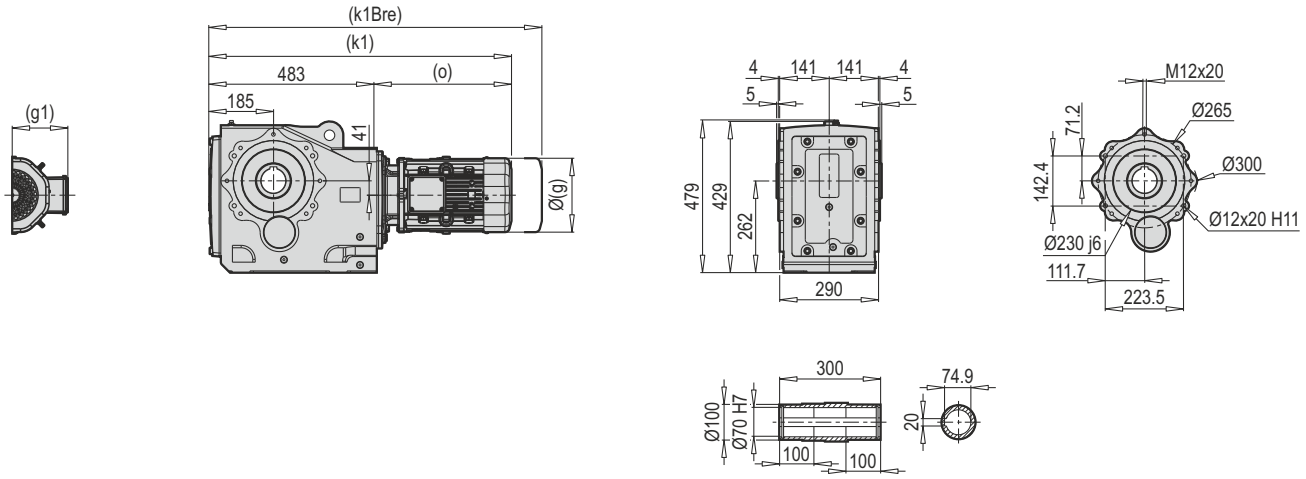

PKD 5390 DG/DIN 5480

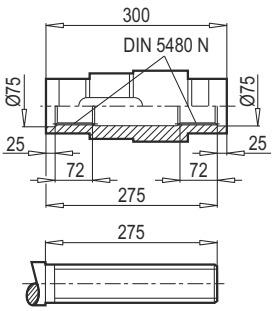

N70 x 2 x 30 x 34 x 9H

PKD 5390 DG/KS

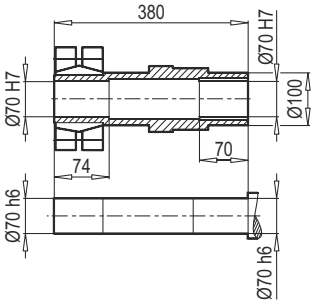

PKD 5390 DG/Ç

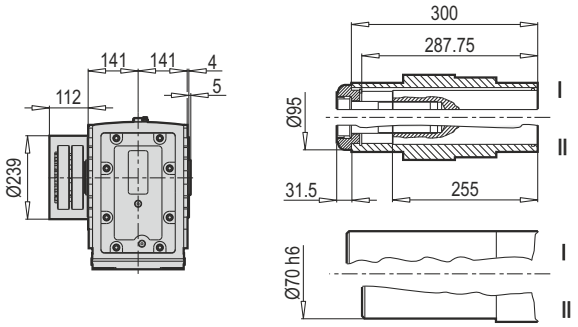

66-67

Konik sıktırma / Shrink disc / Schrumpfscheibe				Altıköşe başlı cıvata / Hexagonal screw / Sechskantschraube DIN 931 / DIN 933* 10.9Vz		
Tip / Type / Typ	M_{amax} (Nm)	s^{h6}	s^{f6}	dxl	Zs	MA (Nm)
KS 70/90	4800	2.87	2.69	M12x70*	10	100

	90 S/L	100 L	112 M	132 S	132 M	160 M/L	180 M/L	
g	182	202	220	271	271	322	363	
g1	130	153	159	188	188	214	249	
k1	813	864	863	925	925	1013	1107	
k1Bre	881	948	963	1024	1044	1118	1208	
o	330	381	380	442	442	530	624	

Not : (...) İşaretli olan ölçüler motor markasına göre farklılık gösterir. / Note: The dimensions which have (...) sign vary depending on the motor. / Hinweis: (...) Die gekennzeichneten Maße unterscheiden sich je nach Motormarke.

PKD 5390 IEC

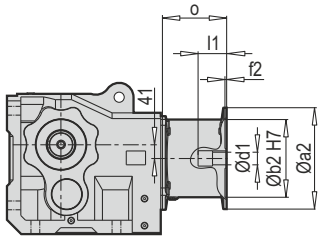

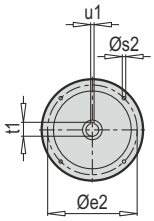

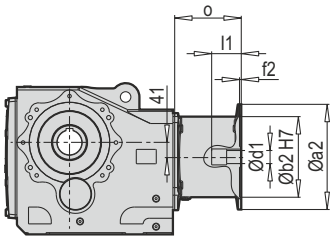

Tip / Type / Typ	IEC	Øa2	Øb2	Øe2	f2	Øs2	Ød1	l1	t1	u1	o
PKD 5390	**90**	200	130	165	4.0	M10	24	50	27.3	8	109
	100	250	180	215	5.0	M12	28	60	31.3	8	133
	112	250	180	215	5.0	M12	28	60	31.3	8	133
	132	300	230	265	5.0	M12	38	80	41.3	10	190
	160	350	250	300	6.0	M16	42	110	45.3	12	194
	180	350	250	300	6.0	M16	48	110	51.8	14	194

~ Kg	
IEC	**PKD 5390**
90	205
100	212
112	212
132	227
160	237
180	237

PKD 5390 W

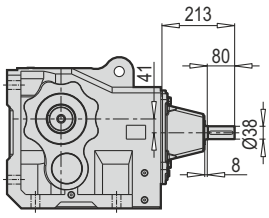

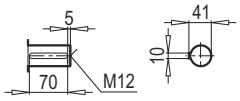

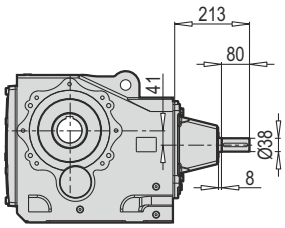

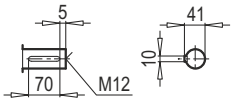

W ~ Kg	
PKD 5390	210

PKD 5390 PAM B5/B14

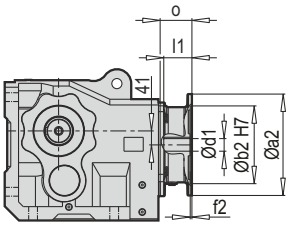

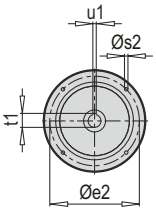

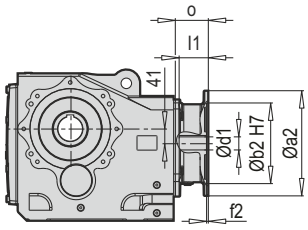

Tip / Type / Typ	PAM B5	Øa2	Øb2	Øe2	f2	Øs2	Ød1	l1	t1	u1	o
PKD 5390	**90**	200	130	165	4.0	M10	24	50	27.3	8	72
	100	250	180	215	5.0	M12	28	60	31.3	8	75
	112	250	180	215	5.0	M12	28	60	31.3	8	75
	132	300	230	265	5.0	M12	38	80	41.3	10	94
	160	350	250	300	6.0	M16	42	110	45.3	12	120
	180	350	250	300	6.0	M16	48	110	51.8	14	120

~ Kg	
PAM B5	PKD 5390
90	191
100	192
112	192
132	201
160	209
180	209

Tip / Type / Typ	PAM B14	Øa2	Øb2	Øe2	f2	Øs2	Ød1	l1	t1	u1	o
PKD 5390	**90**	140	95	115	4.0	9	24	50	27.3	8	72
	100	160	110	130	5.0	9	28	60	31.3	8	75
	112	160	110	130	5.0	9	28	60	31.3	8	75
	132	200	130	165	5.0	11	38	80	41.3	10	94

~ Kg	
PAM B14	PKD 5390
90	190
100	191
112	191
132	196

PKD 5490 TMA

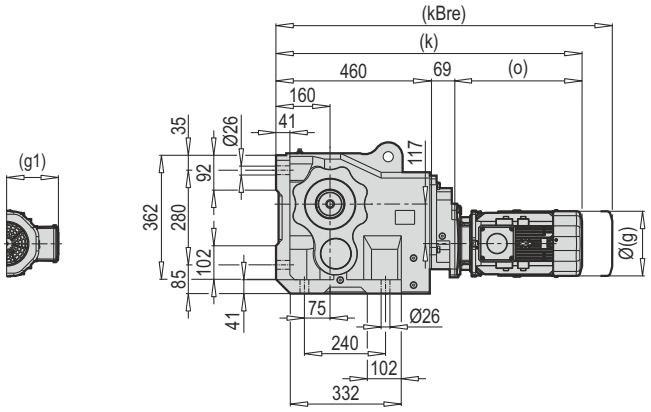

PKD 5490 DA

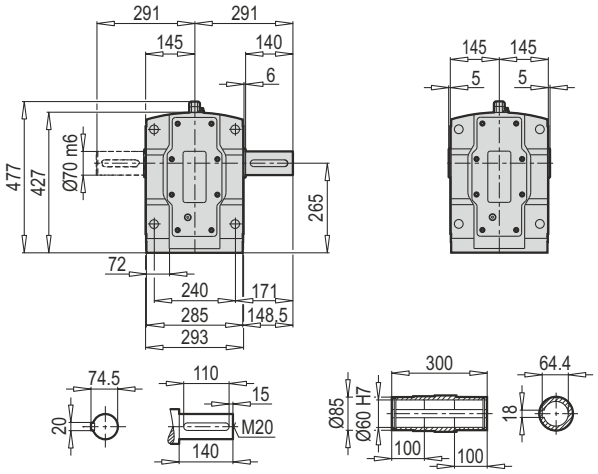

PKD 5490 DG/B5

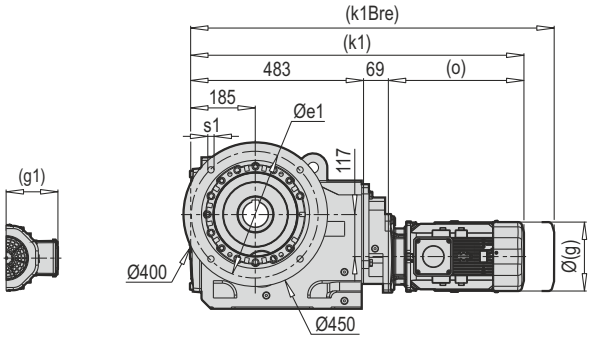

a1	b1	c1	e1	f1	s1
400	300	20	350	5	4x18
450	350	22	400	5	8x18

PKD 5490 TMG/B5

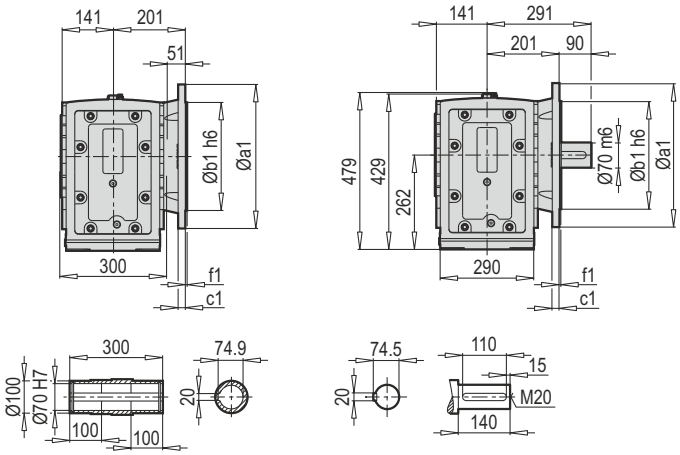

PKD 5490 DA/Ç

66-67

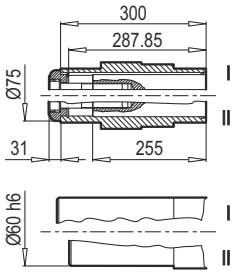

	71 M	80 M	90 S/L	100 L	112 M			
g	140	172	182	202	220			
g1	119	131	130	153	159			
k/k1	767/790	789/812	855/878	906/929	901/924			
kBre/k1Bre	827/850	859/882	923/946	990/1013	1001/1024			
o	236	260	326	377	372			

Not : (...) İşaretli olan ölçüler motor markasına göre farklılık gösterir. / Note: The dimensions which have (...) sign vary depending on the motor. / Hinweis: (...) Die gekennzeichneten Maße unterscheiden sich je nach Motormarke.

PKD 5490 DG/B14

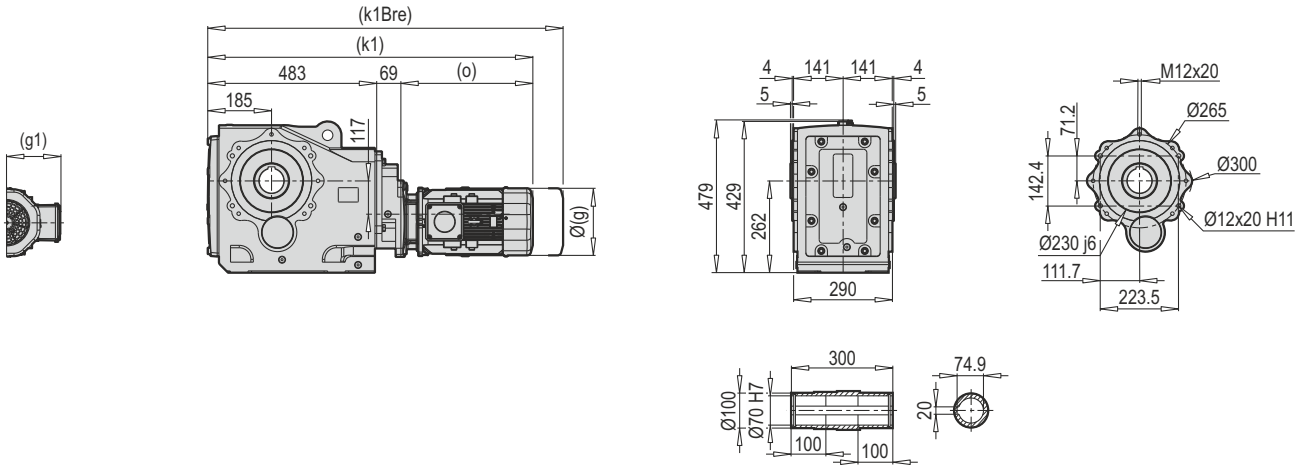

PKD 5490 DG/DIN 5480

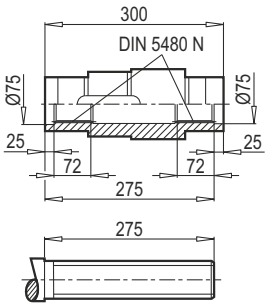

N70 x 2 x 30 x 34 x 9H

PKD 5490 DG/KS

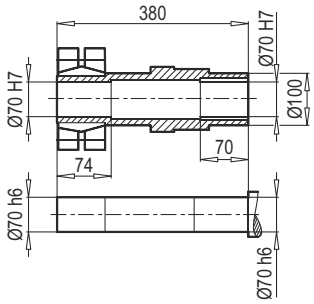

PKD 5490 DG/Ç

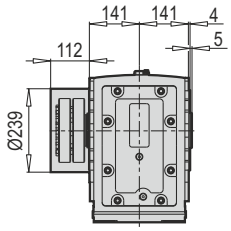

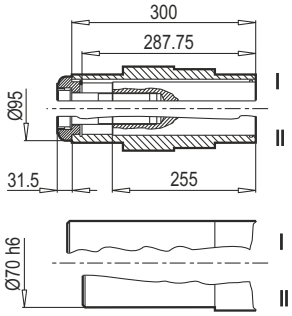

66-67

Konik sıktırma / Shrink disc / Schrumpfscheibe				Altıköşe başlı cıvata / Hexagonal screw / Sechskantschraube DIN 931 / DIN 933* 10.9Vz		
Tip / Type / Typ	M_{amax} (Nm)	s^{h6}	s^{f6}	dxl	Zs	MA (Nm)
KS 70/90	4800	2.87	2.69	M12x70*	10	100

	71 M	80 M	90 S/L	100 L	112 M			
g	140	172	182	202	220			
g1	119	131	130	153	159			
k1	790	812	878	929	924			
k1Bre	850	882	946	1013	1024			
o	236	260	326	377	372			

Not : (...) İşaretli olan ölçüler motor markasına göre farklılık gösterir. / Note: The dimensions which have (...) sign vary depending on the motor. / Hinweis: (...) Die gekennzeichneten Maße unterscheiden sich je nach Motormarke.

PKD 5490 IEC

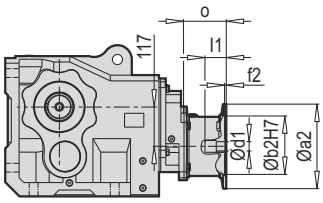

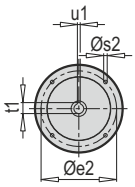

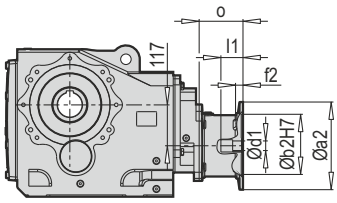

Tip / Type / Typ	IEC	Øa2	Øb2	Øe2	f2	Øs2	Ød1	l1	t1	u1	o
PKD 5490	**71**	160	110	130	4.0	M8	14	30	16.3	5	88
	80	200	130	165	4.0	M10	19	40	21.8	6	107
	90	200	130	165	4.0	M10	24	50	27.3	8	107
	100	250	180	215	5.0	M12	28	60	31.3	8	124
	112	250	180	215	5.0	M12	28	60	31.3	8	124

~ Kg	
IEC	**PKD 5490**
71	216
80	221
90	221
100	225
112	225

PKD 5490 W

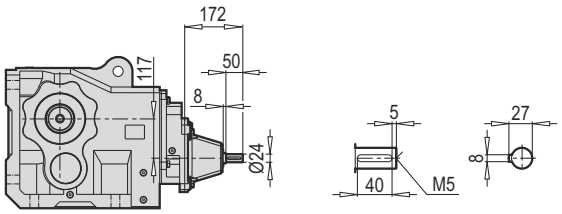

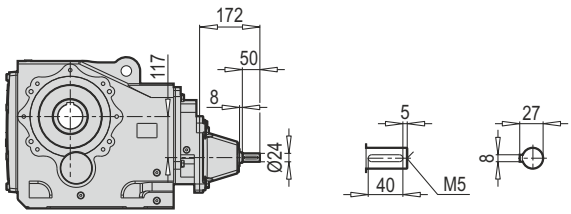

W ~ Kg	
PKD 5490	218

PKD 5490 PAM B5/B14

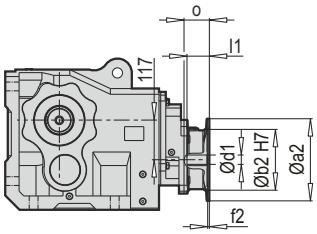

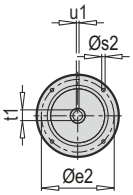

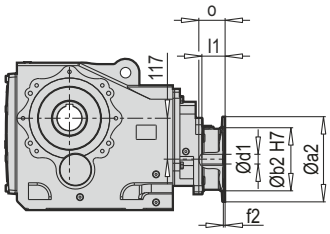

Tip / Type / Typ	PAM B5	Øa2	Øb2	Øe2	f2	Øs2	Ød1	l1	t1	u1	o
PKD 5490	**71**	160	110	130	4.0	M8	14	30	16.3	5	88
	80	200	130	165	4.0	M10	19	40	21.8	6	72
	90	200	130	165	4.0	M10	24	50	27.3	8	72
	100	250	180	215	5.0	M12	28	60	31.3	8	75
	112	250	180	215	5.0	M12	28	60	31.3	8	75

~ Kg	
PAM B5	PKD 5490
71	205
80	206
90	206
100	207
112	207

Tip / Type / Typ	PAM B14	Øa2	Øb2	Øe2	f2	Øs2	Ød1	l1	t1	u1	o
PKD 5490	**71**	105	70	85	4.0	7	14	30	16.3	5	88
	80	120	80	100	4.0	7	19	40	21.8	6	72
	90	140	95	115	4.0	9	24	50	27.3	8	72
	100	160	110	130	5.0	9	28	60	31.3	8	75
	112	160	110	130	5.0	9	28	60	31.3	8	75

~ Kg	
PAM B14	PKD 5490
71	203
80	204
90	204
100	206
112	206

PKD 6390 TMA

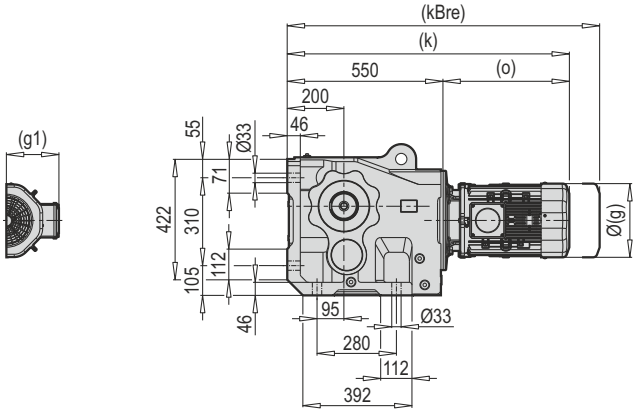

PKD 6390 DA

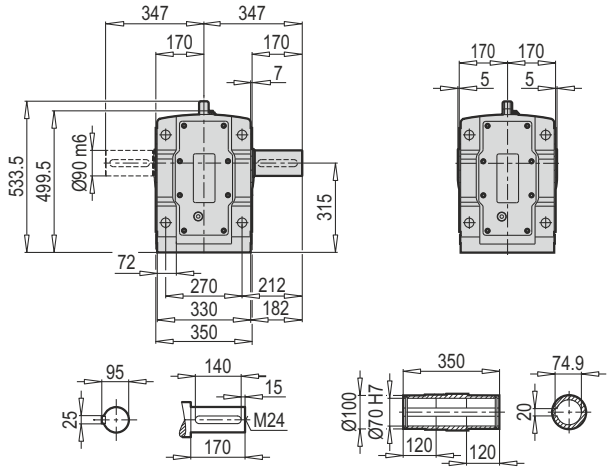

PKD 6390 DG/B5

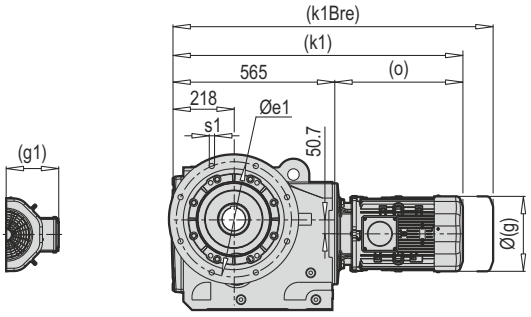

a1	b1	c1	e1	f1	s1
450	350	22	400	5	8x18
550	450	28	500	5	8x18

PKD 6390 TMG/B5

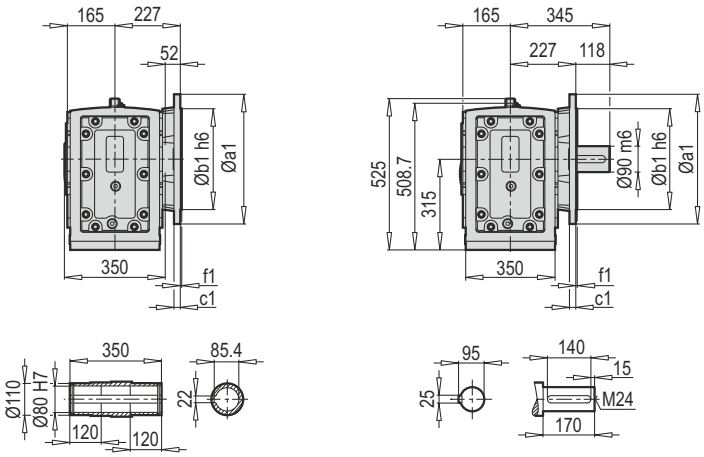

PKD 6390 DA/Ç

66-67

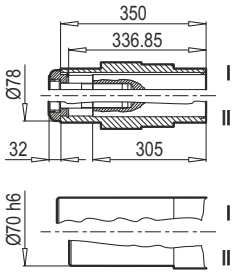

	100 L	112 M	132 S	132 M	160 M/L	180 M/L	200 L	225 M
g	202	220	271	271	322	363	363	456
g1	153	159	188	188	214	249	249	260
k/k1	930/945	929/944	995/1010	995/1010	1080/1095	1174/1189	1183/1198	1252/1270
kBre/k1Bre	1014/1029	1029/1044	1095/1120	1115/1130	1185/1200	1293/1308	1301/1316	1424/1442
o	380	379	445	445	530	624	633	700

Not : (...) İşaretli olan ölçüler motor markasına göre farklılık gösterir. / Note: The dimensions which have (...) sign vary depending on the motor. / Hinweis: (...) Die gekennzeichneten Maße unterscheiden sich je nach Motormarke.

PKD 6390 DG/B14

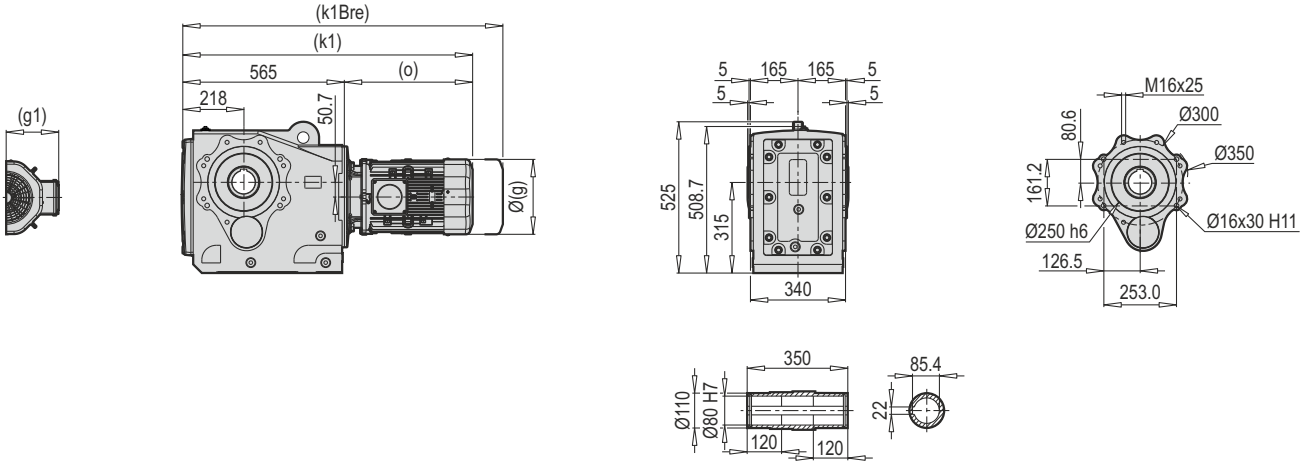

PKD 6390 DG/DIN 5480

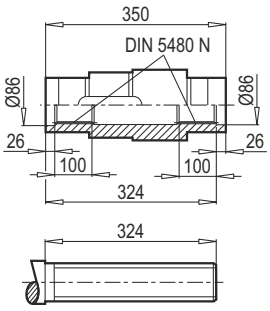

N85 x 3 x 30 x 27 x 9H

PKD 6390 DG/KS

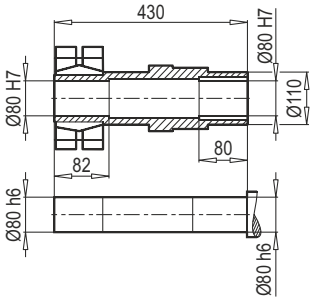

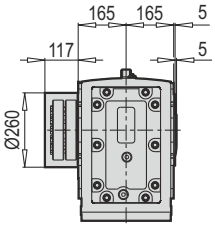

PKD 6390 DG/Ç

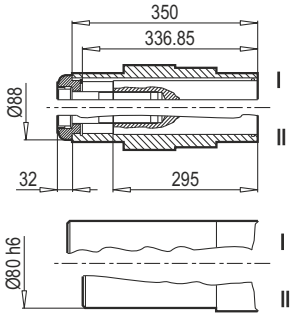

66-67

Konik sıktırma / Shrink disc / Schrumpfscheibe				Altıköşe başlı cıvata / Hexagonal screw / Sechskantschraube DIN 931 / DIN 933* 10.9Vz		
Tip / Type / Typ	M_{amax} (Nm)	s^{h6}	s^{f6}	dxl	Zs	MA (Nm)
KS 80/108	8500	3.70	3.56	M12x70*	14	100

	100 L	112 M	132 S	132 M	160 M/L	180 M/L	200 L	225 M
g	202	220	271	271	322	363	363	456
g1	153	159	188	188	214	249	249	260
k1	945	944	1010	1010	1095	1189	1198	1270
k1Bre	1029	1044	1120	1130	1200	1308	1316	1442
o	380	379	445	445	530	624	633	700

Not : (...) İşaretli olan ölçüler motor markasına göre farklılık gösterir. / Note: The dimensions which have (...) sign vary depending on the motor. / Hinweis: (...) Die gekennzeichneten Maße unterscheiden sich je nach Motormarke.

PKD 6390 IEC

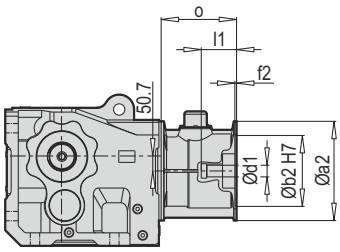

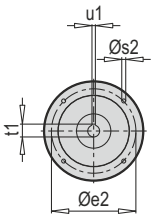

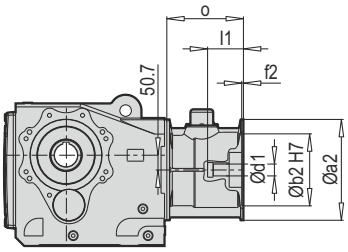

Tip / Type / Typ	IEC	Øa2	Øb2	Øe2	f2	Øs2	Ød1	l1	t1	u1	o
PKD 6390	**100**	250	180	215	5.0	M12	28	60	31.3	8	127
	112	250	180	215	5.0	M12	28	60	31.3	8	127
	132	300	230	265	5.0	M12	38	80	41.3	10	177
	160	350	250	300	6.0	M16	42	110	45.3	12	266
	180	350	250	300	6.0	M16	48	110	51.8	14	266
	200	400	300	350	6.0	M16	55	110	59.3	16	229
	225	450	350	400	6.0	M16	60	140	64.4	18	303

~ Kg	
IEC	**PKD 6390**
100	365
112	365
132	379
160	405
180	405
200	420
225	436

PKD 6390 W

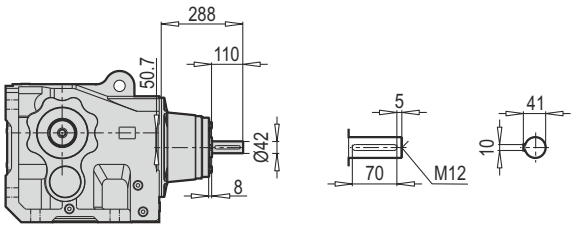

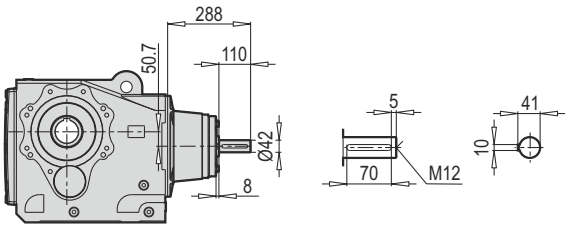

W ~ Kg	
PKD 6390	378

PKD 6390 PAM B5/B14

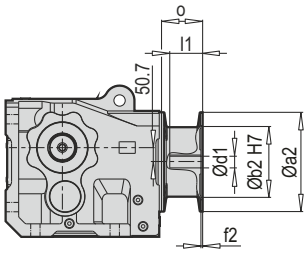

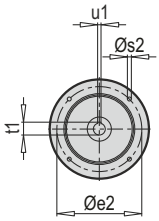

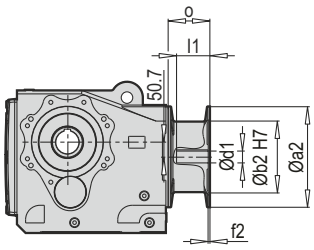

Tip / Type / Typ	PAM B5	Øa2	Øb2	Øe2	f2	Øs2	Ød1	l1	t1	u1	o
PKD 6390	100	250	180	215	5.0	M12	28	60	31.3	8	75
	112	250	180	215	5.0	M12	28	60	31.3	8	75
	132	300	230	265	5.0	M12	38	80	41.3	10	110
	160	350	250	300	6.0	M16	42	110	45.3	12	145
	180	350	250	300	6.0	M16	48	110	51.8	14	145
	200	400	300	350	6.0	M16	55	110	59.3	16	157
	225	450	350	400	6.0	M16	60	140	64.4	18	183

~ Kg	
PAM B5	PKD 6390
100	335
112	335
132	346
160	363
180	363
200	370
225	380

Tip / Type / Typ	PAM B14	Øa2	Øb2	Øe2	f2	Øs2	Ød1	l1	t1	u1	o
PKD 6390	100	160	110	130	5.0	9	28	60	31.3	8	75
	112	160	110	130	5.0	9	28	60	31.3	8	75
	132	200	130	165	5.0	11	38	80	41.3	10	110

~ Kg	
PAM B14	PKD 6390
100	334
112	334
132	341

PKD 7390 TMA

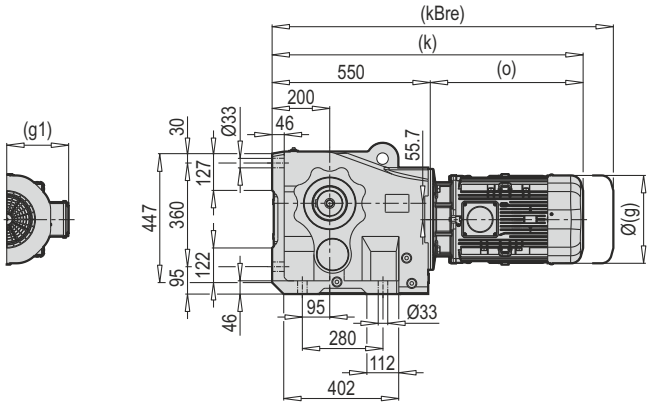

PKD 7390 DA

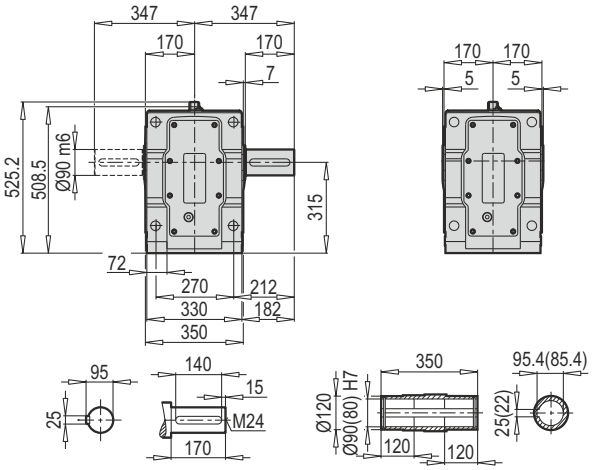

PKD 7390 DG/B5

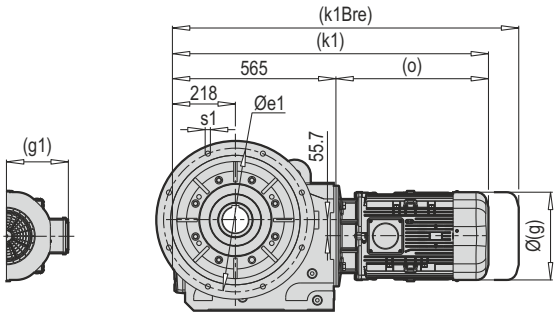

a1	b1	c1	e1	f1	s1
450	350	22	400	5	8x18
550	450	28	500	5	8x18

PKD 7390 TMG/B5

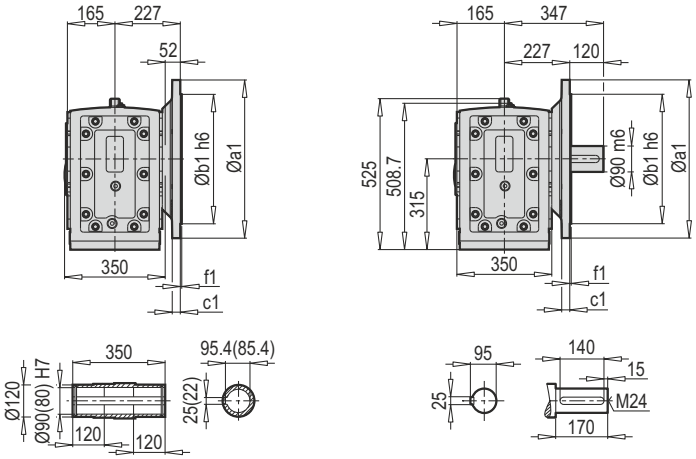

PKD 7390 DA/Ç

66-67

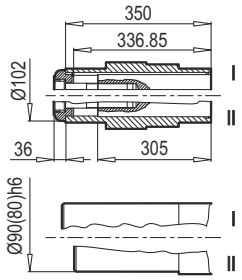

	100 L	112 M	132 S	132 M	160 M/L	180 M/L	200 L	225 M
g	202	220	271	271	322	363	363	456
g1	153	159	188	188	214	249	249	260
k/k1	930/945	929/944	995/1010	995/1010	1080/1095	1174/1189	1183/1198	1252/1270
kBre/k1Bre	1014/1029	1029/1044	1095/1110	1115/1130	1185/1200	1293/1308	1301/1316	1424/1442
o	380	379	445	445	530	624	633	700

Not : (...) İşaretli olan ölçüler motor markasına göre farklılık gösterir. / Note: The dimensions which have (...) sign vary depending on the motor. /
Hinweis: (...) Die gekennzeichneten Maße unterscheiden sich je nach Motormarke.

PKD 7390 DG/B14

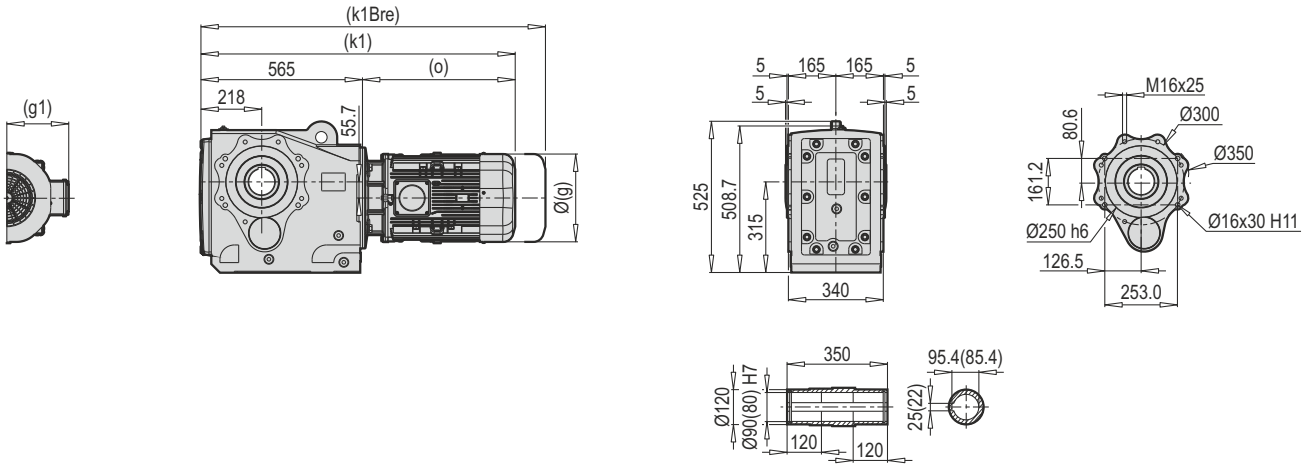

PKD 7390 DG/DIN 5480

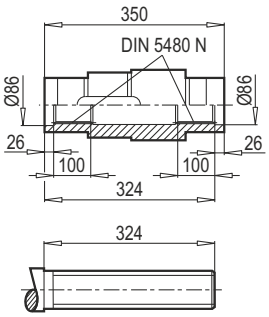

N85 x 3 x 30 x 27 x 9H

PKD 7390 DG/KS

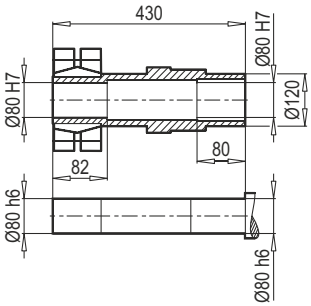

PKD 7390 DG/Ç

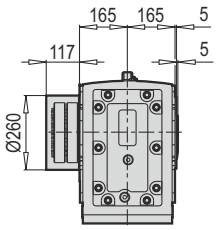

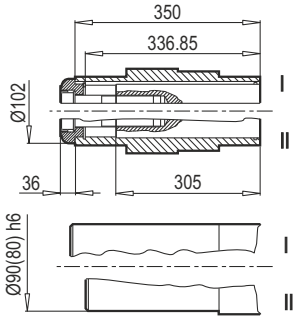

66-67

Konik sıktırma / Shrink disc / Schrumpfscheibe				Altıköşe başlı cıvata / Hexagonal screw / Sechskantschraube DIN 931 / DIN 933* 10.9Vz		
Tip / Type / Typ	M_{amax} (Nm)	s^{h6}	s^{f6}	dxl	Zs	MA (Nm)
KS 80/108	8500	3.70	3.56	M12x70*	14	100

	100 L	112 M	132 S	132 M	160 M/L	180 M/L	200 L	225 M
g	202	220	271	271	322	363	363	456
g1	153	159	188	188	214	249	249	260
k1	945	944	1010	1010	1095	1189	1198	1270
k1Bre	1029	1044	1110	1130	1200	1308	1316	1442
o	380	379	445	445	530	624	633	700

Not : (...) İşaretli olan ölçüler motor markasına göre farklılık gösterir. / Note: The dimensions which have (...) sign vary depending on the motor. / Hinweis: (...) Die gekennzeichneten Maße unterscheiden sich je nach Motormarke.

PKD 7390 IEC

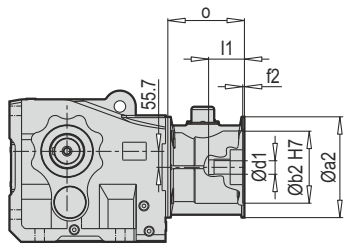

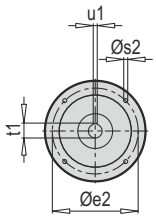

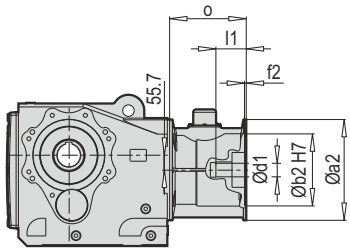

Tip / Type / Typ	IEC	Øa2	Øb2	Øe2	f2	Øs2	Ød1	l1	t1	u1	o
PKD 7390	**100**	250	180	215	5.0	M12	28	60	31.3	8	127
	112	250	180	215	5.0	M12	28	60	31.3	8	127
	132	300	230	265	5.0	M12	38	80	41.3	10	177
	160	350	250	300	6.0	M16	42	110	45.3	12	266
	180	350	250	300	6.0	M16	48	110	51.8	14	266
	200	400	300	350	6.0	M16	55	110	59.3	16	229
	225	450	350	400	6.0	M16	60	140	64.4	18	303

~ Kg	
IEC	**PKD 7390**
100	365
112	365
132	379
160	405
180	405
200	420
225	436

PKD 7390 W

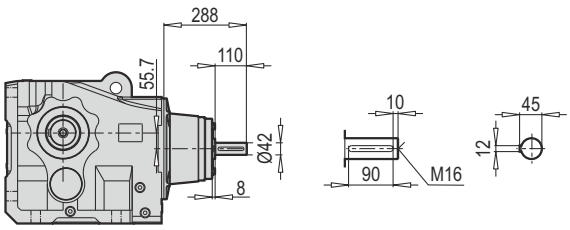

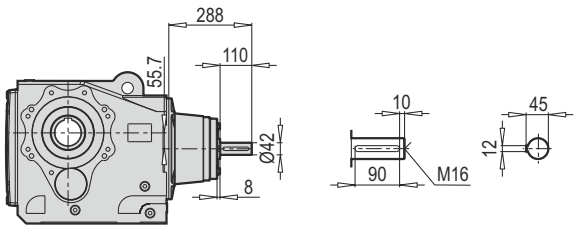

W ~ Kg	
PKD 7390	378

PKD 7390 PAM B5/B14

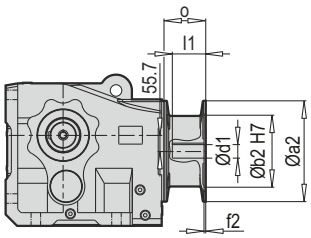

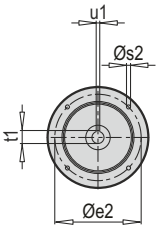

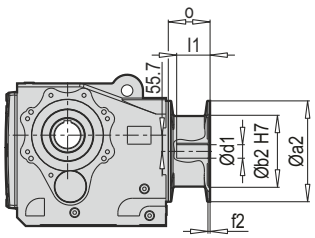

Tip / Type / Typ	PAM B5	Øa2	Øb2	Øe2	f2	Øs2	Ød1	l1	t1	u1	o
PKD 7390	**100**	250	180	215	5.0	M12	28	60	31.3	8	75
	112	250	180	215	5.0	M12	28	60	31.3	8	75
	132	300	230	265	5.0	M12	38	80	41.3	10	110
	160	350	250	300	6.0	M16	42	110	45.3	12	145
	180	350	250	300	6.0	M16	48	110	51.8	14	145
	200	400	300	350	6.0	M16	55	100	59.3	16	157
	225	450	350	400	6.0	M16	60	140	64.4	18	183

~ Kg	
PAM B5	PKD 7390
100	335
112	335
132	346
160	363
180	363
200	370
225	380

Tip / Type / Typ	PAM B14	Øa2	Øb2	Øe2	f2	Øs2	Ød1	l1	t1	u1	o
PKD 7390	**100**	160	110	130	5.0	9	28	60	31.3	8	75
	112	160	110	130	5.0	9	28	60	31.3	8	75
	132	200	130	165	5.0	11	38	80	41.3	10	110

~ Kg	
PAM B14	PKD 7390
100	334
112	334
132	341

PKD 8390 TMA

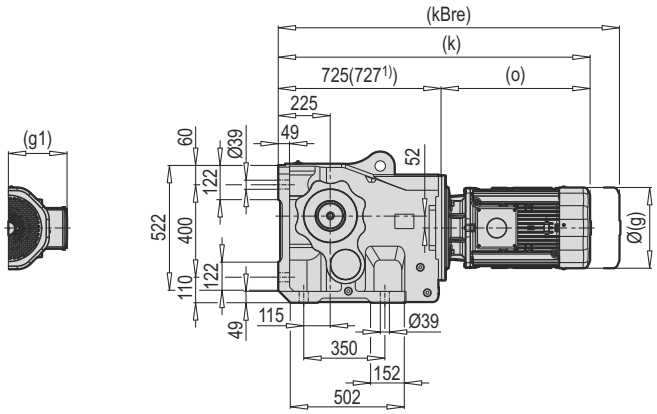

PKD 8390 DA

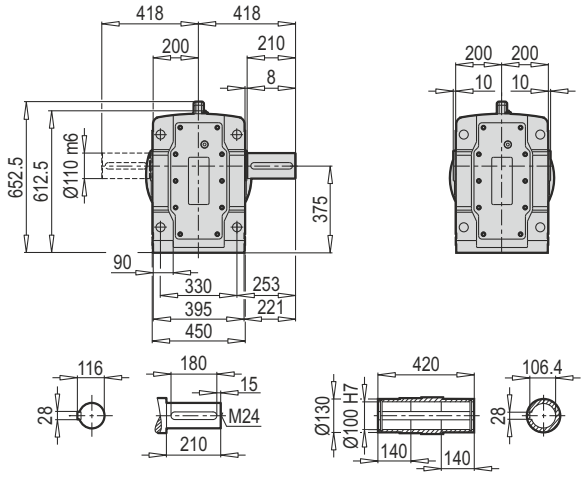

PKD 8390 DG/B5

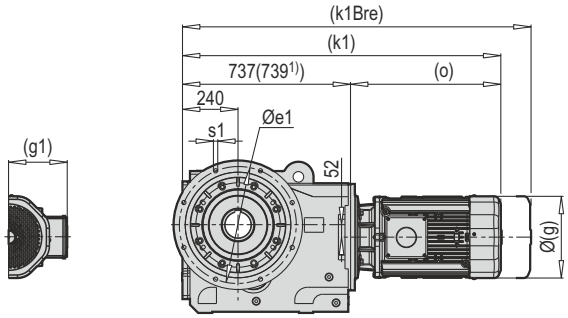

a1	b1	c1	e1	f1	s1
550	450	28	500	5	8x18

PKD 8390 TMG/B5

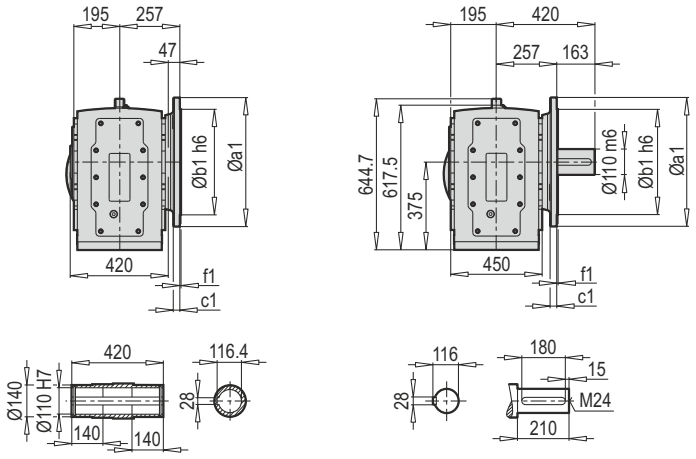

PKD 8390 DA/Ç

66-67

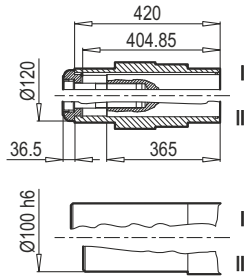

	132 S	132 M	160 M/L	180 M/L	200 L	225 M	250 M[1]	280 M[1]	315 S/M/L
g	271	271	322	363	363	456	495	527	-
g1	188	188	214	249	249	260	392	367	-
k/k1	1170/1182	1170/1182	1255/1267	1349/1361	1358/1370	1427/1442	1351/1366	1653/1638	-
kBre/k1Bre	1270/1282	1290/1302	1360/1372	1468/1480	1476/1488	1599/1614	1481/1496	-	-
o	445	445	530	624	633	700	644	888	-

Not : (...) İşaretli olan ölçüler motor markasına göre farklılık gösterir. / Note: The dimensions which have (...) sign vary depending on the motor. / Hinweis: (...) Die gekennzeichneten Maße unterscheiden sich je nach Motormarke.

PKD 8390 DG/B14

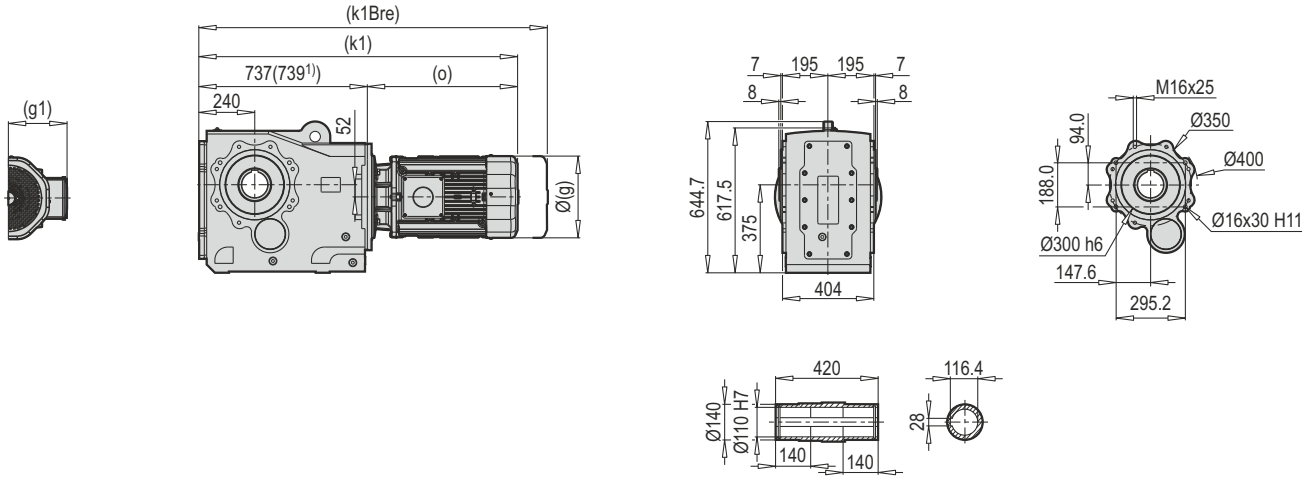

PKD 8390 DG/DIN 5480

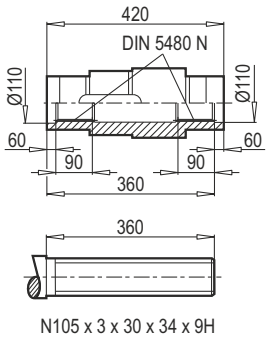

PKD 8390 DG/KS

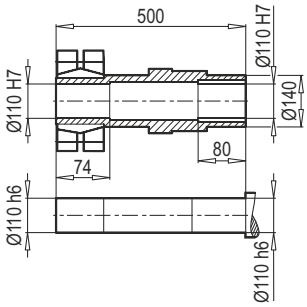

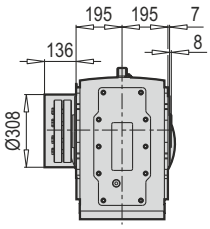

PKD 8390 DG/Ç

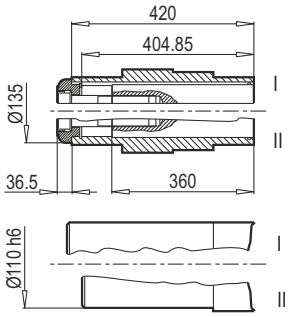

66-67

Konik sıktırma / Shrink disc / Schrumpfscheibe				Altıköşe başlı cıvata / Hexagonal screw / Sechskantschraube DIN 931 / DIN 933* 10.9Vz		
Tip / Type / Typ	M_{amax} (Nm)	s^{h6}	s^{f6}	dxl	Zs	MA (Nm)
KS 110/138	13000	2.66	2.54	M16x70	8	250

	132 S	132 M	160 M/L	180 M/L	200 L	225 M	250 M[1)]	280 M[1)]	315 S/M/L
g	271	271	322	363	363	456	495	527	-
g1	188	188	214	249	249	260	392	367	-
k1	1182	1182	1267	1361	1370	1442	1366	1638	-
k1Bre	1282	1302	1372	1480	1488	1614	1496	-	-
o	445	445	530	624	633	700	644	888	-

Not : (...) İşaretli olan ölçüler motor markasına göre farklılık gösterir. / Note: The dimensions which have (...) sign vary depending on the motor. / Hinweis: (...) Die gekennzeichneten Maße unterscheiden sich je nach Motormarke.

PKD 8390 IEC

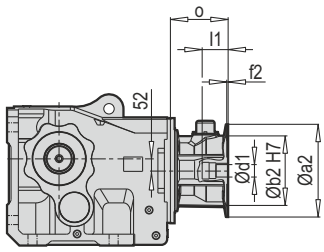

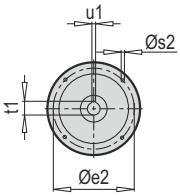

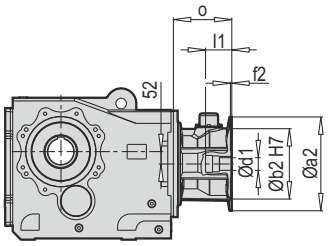

Tip / Type / Typ	IEC	Øa2	Øb2	Øe2	f2	Øs2	Ød1	l1	t1	u1	o
PKD 8390	**132**	300	230	265	5.0	M12	38	80	41.3	10	177
	160	350	250	300	6.0	M16	42	110	45.3	12	266
	180	350	250	300	6.0	M16	48	110	51.8	14	266
	200	400	300	350	6.0	M16	55	110	59.3	16	229
	225	450	350	400	6.0	M16	60	140	64.4	18	303
	250	550	450	500	6.0	M16	65	140	69.4	18	303
	280	550	450	500	6.0	M16	75	140	79.9	20	303
	315	660	550	600	7.0	M20	80	170	85.4	22	381

~ Kg	
IEC	**PKD 8390**
132	658
160	685
180	685
200	700
225	716
225	774
280	774
315	859

PKD 8390 W

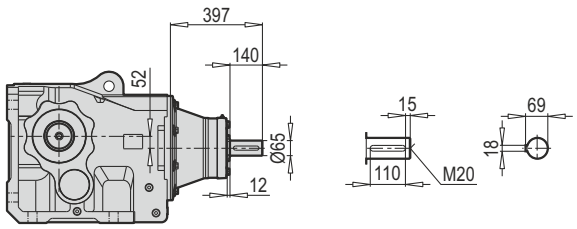

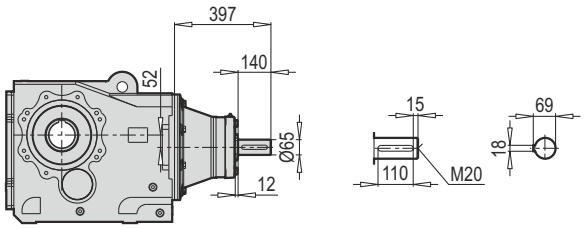

W ~ Kg	
PKD 8390	737

PKD 8390 PAM B5/B14

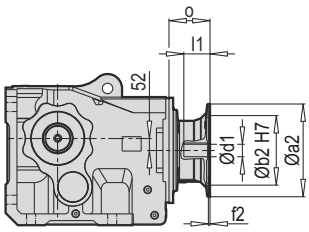

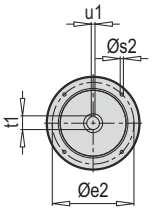

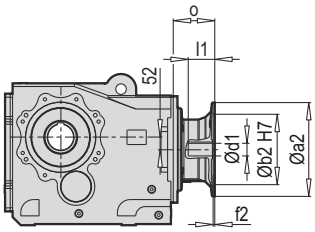

Tip / Type / Typ	PAM B5	Øa2	Øb2	Øe2	f2	Øs2	Ød1	l1	t1	u1	o
PKD 8390	**100**	250	180	215	5.0	M12	28	60	31.3	8	75
	112	250	180	215	5.0	M12	28	60	31.3	8	75
	132	300	230	265	5.0	M12	38	80	41.3	10	110
	160	350	250	300	6.0	M16	42	110	45.3	12	145
	180	350	250	300	6.0	M16	48	110	51.8	14	145
	200	400	300	350	6.0	M16	55	110	59.3	16	157
	225	450	350	400	6.0	M16	60	140	64.4	18	183
	250	550	450	500	6.0	M16	65	140	69.4	18	202
	280	550	450	500	6.0	M16	75	140	79.9	20	202

~ Kg	
PAM B5	PKD 8390
100	595
112	595
132	606
160	623
180	623
200	630
225	640
250	700
280	700

Tip / Type / Typ	PAM B14	Øa2	Øb2	Øe2	f2	Øs2	Ød1	l1	t1	u1	o
PKD 8390	**100**	160	110	130	5.0	9	28	60	31.3	8	75
	112	160	110	130	5.0	9	28	60	31.3	8	75
	132	200	130	165	5.0	11	38	80	41.3	10	110

~ Kg	
PAM B14	PKD 8390
100	594
112	594
132	601

PKD G 8390 TMA

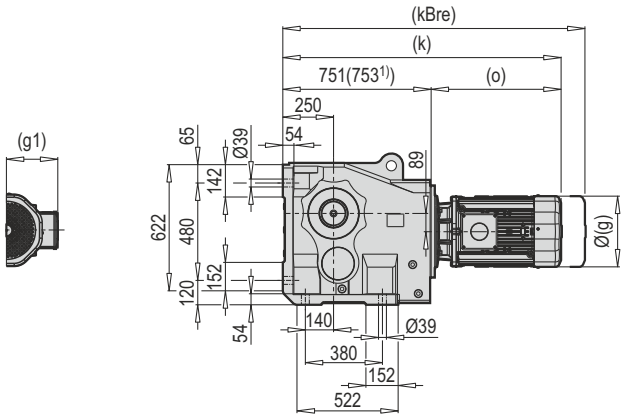

PKD G 8390 DA

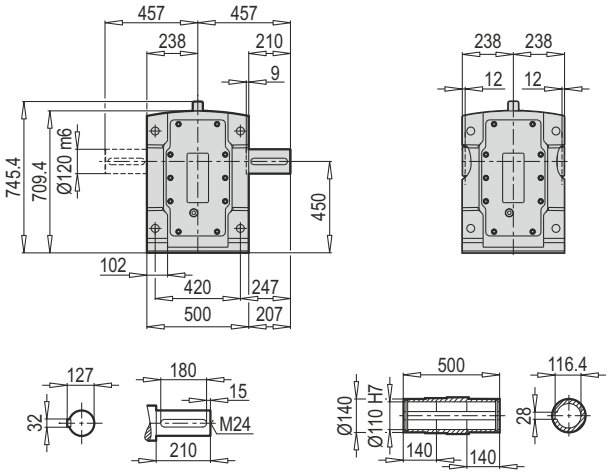

PKD G 8390 DG/B5

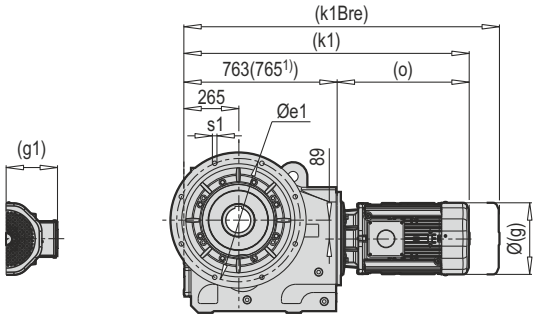

a1	b1	c1	e1	f1	s1
660	550	32	600	6	8x22

PKD G 8390 TMG/B5

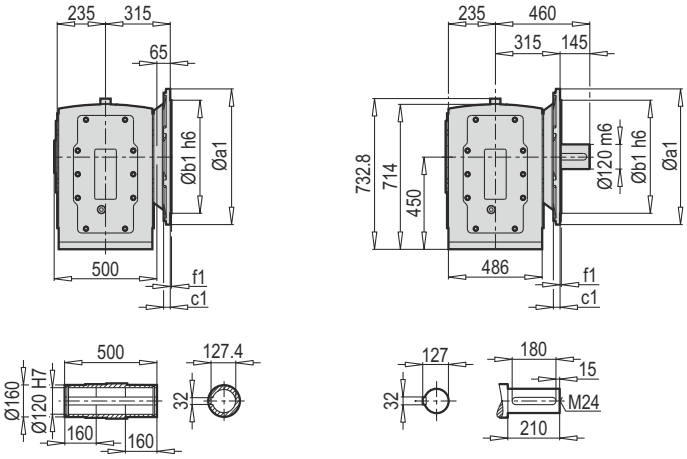

PKD G 8390 DA/Ç

66-67

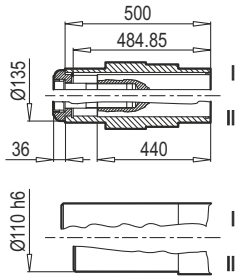

	132 S	132 M	160 M/L	180 M/L	200 L	225 M	250 M[1]	280 M[1]	315 S/M/L[2]
g	271	271	322	363	363	456	495	527	-
g1	188	188	214	249	249	260	392	367	-
k/k1	1196/1208	1196/1208	1281/1293	1375/1387	1384/1396	1453/1468	1377/1392	1649/1664	-
kBre/k1Bre	1296/1308	1316/1328	1386/1398	1494/1506	1502/1514	1625/1640	1507/1522	-	-
o	445	445	530	624	633	700	644	888	-

Not : (...) İşaretli olan ölçüler motor markasına göre farklılık gösterir. / Note: The dimensions which have (...) sign vary depending on the motor. / Hinweis: (...) Die gekennzeichneten Maße unterscheiden sich je nach Motormarke.

PKD G 8390 DG/B14

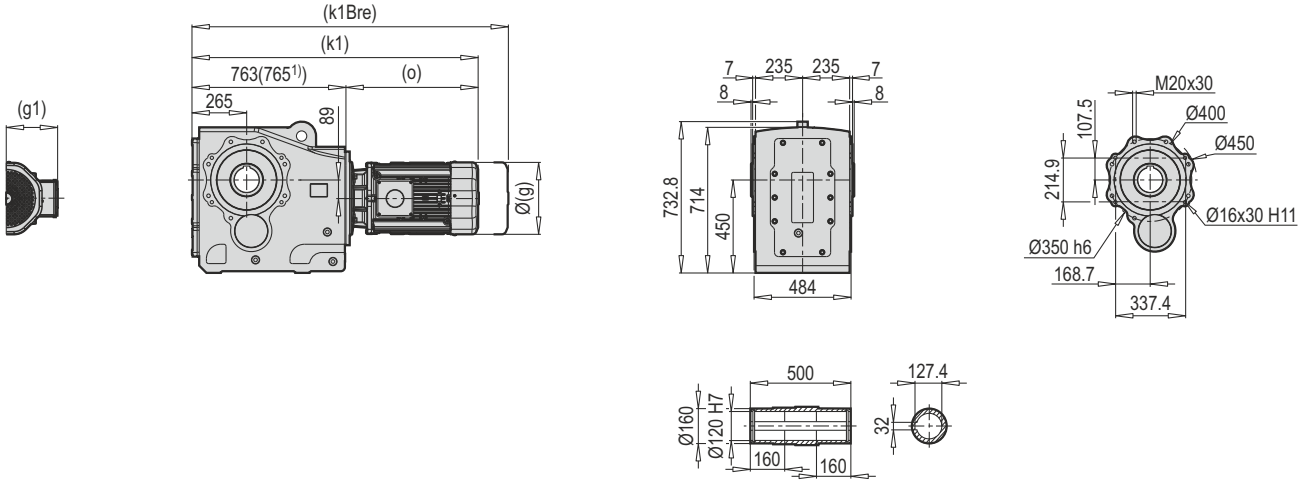

PKD G 8390 DG/DIN 5480

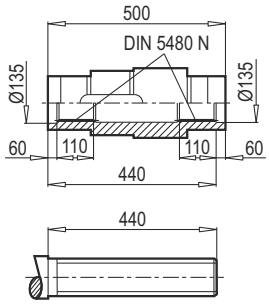

N130 x 5 x 30 x 24 x 9H

PKD G 8390 DG/KS

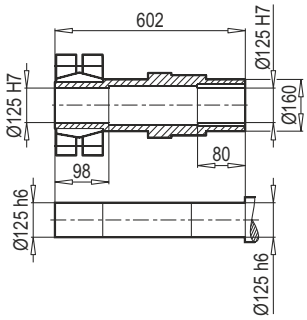

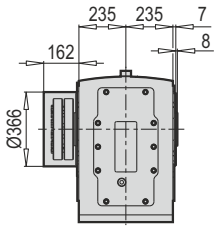

PKD G 8390 DG/Ç

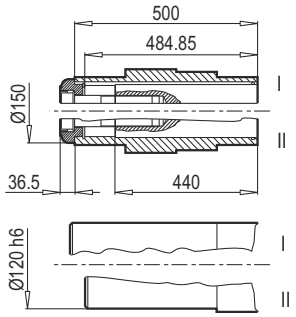

66-67

Konik sıktırma / Shrink disc / Schrumpfscheibe				Altıköşe başlı cıvata / Hexagonal screw / Sechskantschraube DIN 931 / DIN 933* 10.9Vz		
Tip / Type / Typ	M_{amax} (Nm)	s^{h6}	s^{f6}	dxl	Zs	MA (Nm)
KS 125/158	20000	2.91	2.77	M16x80*	12	250

	132 S	132 M	160 M/L	180 M/L	200 L	225 M	250 M 1)	280 M 1)	315 M 2)
g	271	271	322	363	363	456	495	527	-
g1	188	188	214	249	249	260	392	367	-
k1	1208	1208	1293	1387	1396	1468	1392	1664	-
k1Bre	1308	1328	1398	1506	1514	1640	1522	-	-
o	445	445	530	624	633	700	644	888	-

Not : (...) İşaretli olan ölçüler motor markasına göre farklılık gösterir. / Note: The dimensions which have (...) sign vary depending on the motor. / Hinweis: (...) Die gekennzeichneten Maße unterscheiden sich je nach Motormarke.

PKD G 8390 IEC

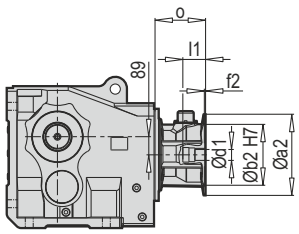

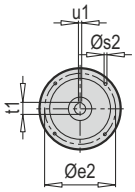

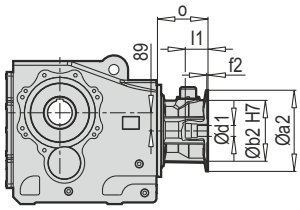

Tip / Type / Typ	IEC	Øa2	Øb2	Øe2	f2	Øs2	Ød1	l1	t1	u1	o
PKD G 8390	**132**	300	230	265	5.0	M12	38	80	41.3	10	177
	160	350	250	300	6.0	M16	42	110	45.3	12	266
	180	350	250	300	6.0	M16	48	110	51.8	14	266
	200	400	300	350	6.0	M16	55	110	59.3	16	229
	225	450	350	400	6.0	M16	60	140	64.4	18	303
	250	550	450	500	6.0	M16	65	140	69.4	18	303
	280	550	450	500	6.0	M16	75	140	79.9	20	303
	315	660	550	600	7.0	M20	80	170	85.4	22	381

~ Kg	
IEC	**PKD G 8390**
132	923
160	950
180	950
200	965
225	981
225	1039
280	1039
315	1124

PKD G 8390 W

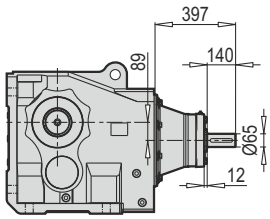

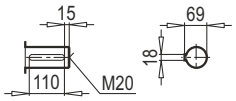

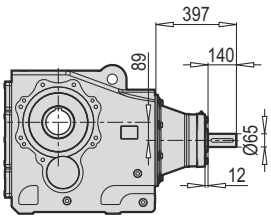

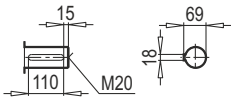

W ~ Kg	
PKD G 8390	1002

PKD G 8390 PAM B5/B14

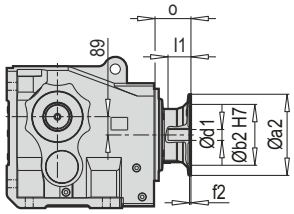

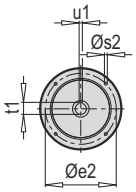

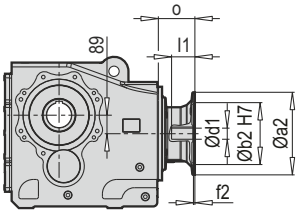

Tip / Type / Typ	PAM B5	Øa2	Øb2	Øe2	f2	Øs2	Ød1	l1	t1	u1	o
PKD G 8390	**132**	300	230	265	5.0	M12	38	80	41.3	10	110
	160	350	250	300	6.0	M16	42	110	45.3	12	145
	180	350	250	300	6.0	M16	48	110	51.8	14	145
	200	400	300	350	6.0	M16	55	110	59.3	16	157
	225	450	350	400	6.0	M16	60	140	64.4	18	183
	250	550	450	500	6.0	M16	65	140	69.4	18	202
	280	550	450	500	6.0	M16	75	140	79.9	20	202

~ Kg	
PAM B5	PKD G 8390
132	856
160	873
180	873
200	880
225	890
250	950
280	950

Tip / Type / Typ	PAM B14	Øa2	Øb2	Øe2	f2	Øs2	Ød1	l1	t1	u1	o
PKD G 8390	**132**	200	130	165	5.0	11	38	80	41.3	10	110

~ Kg	
PAM B14	PKD G 8390
132	851

PKD 9390 TMA

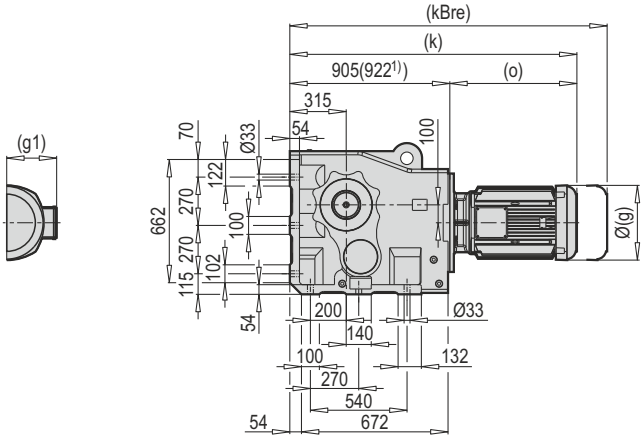

PKD 9390 DA

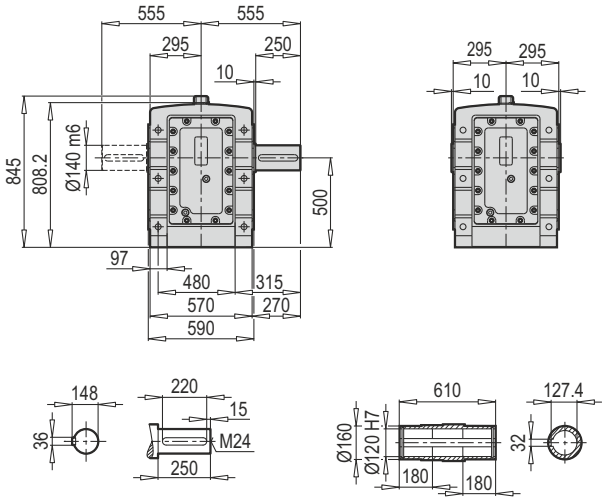

PKD 9390 DG/KS/B5

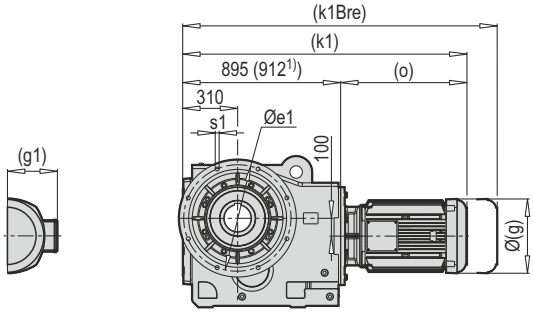

a1	b1	c1	e1	f1	s1
660	550	32	600	6	8x22

PKD 9390 TMG/B5

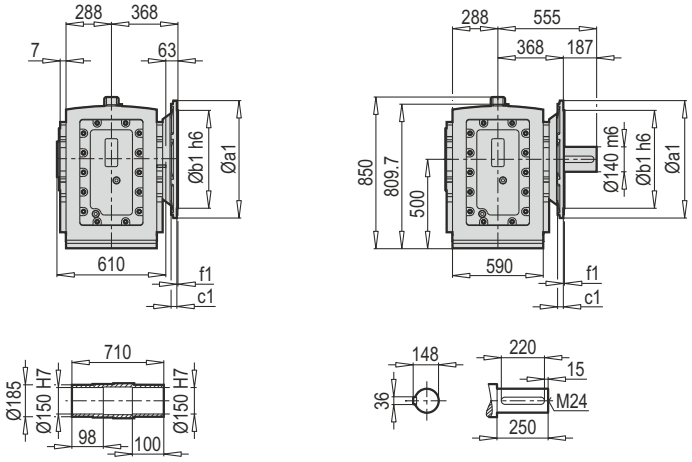

	132 S/M	160 M/L	180 M/L	200 L	225 M	250 M[1)]	280 M[1)]	315 S/M/L[2)]		
g		322	363	363	456	495	527	-		
g1		214	249	249	260	392	367	-		
k/k1		1435	1529	1538	1607	1567	1784	-		
kBre/k1Bre		1540	1648	1656	1779	1697	-	-		
o		530	624	633	700	644	888	-		

Not : (...) İşaretli olan ölçüler motor markasına göre farklılık gösterir. / Note: The dimensions which have (...) sign vary depending on the motor. / Hinweis: (...) Die gekennzeichneten Maße unterscheiden sich je nach Motormarke.

PKD 9390 DG/KS/B14

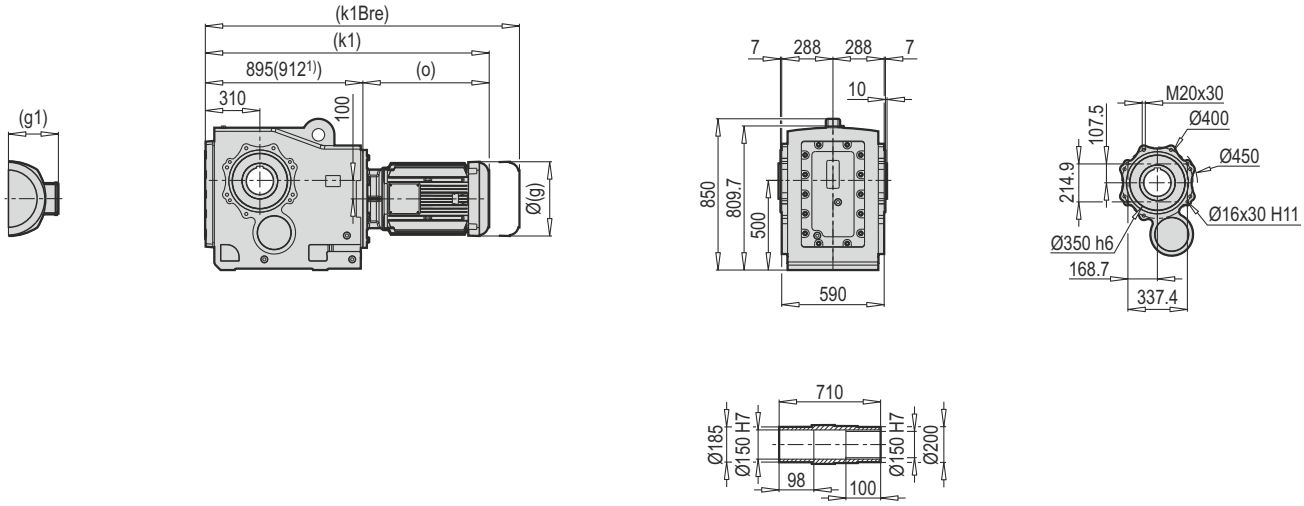

PKD 9390 DG/DIN 5480

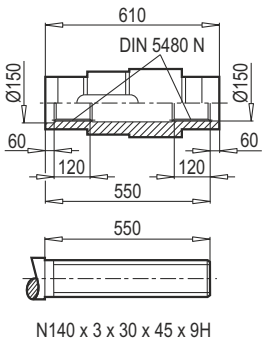

PKD 9390 DG/KS

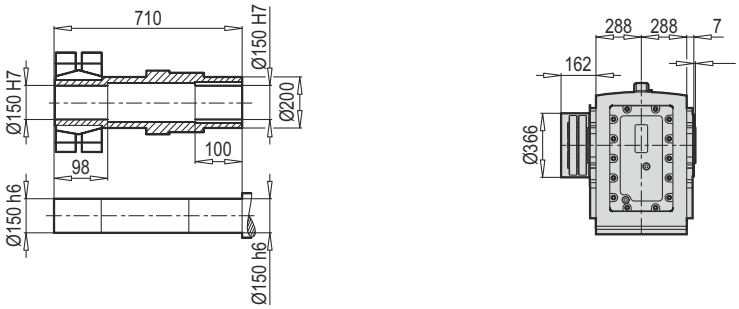

Konik sıktırma / Shrink disc / Schrumpfscheibe				Altıköşe başlı cıvata / Hexagonal screw / Sechskantschraube DIN 931 / DIN 933* 10.9Vz		
Tip / Type / Typ	M_{amax} (Nm)	s^{h6}	s^{f6}	dxl	Zs	MA (Nm)
KS 150/185	32000	2.66	2.56	M16x80*	14	250

	132 S/M	160 M/L	180 M/L	200 L	225 M	250 M[1)]	280 M[1)]	315 S/M/L[2)]		
g		322	363	363	456	495	527	-		
g1		214	249	249	260	392	367	-		
k1		1425	1519	1528	1603	1563	1780	-		
k1Bre		1530	1638	1646	1775	1693	-	-		
o		530	624	633	700	644	888	-		

Not : (...) İşaretli olan ölçüler motor markasına göre farklılık gösterir. / Note: The dimensions which have (...) sign vary depending on the motor. / Hinweis: (...) Die gekennzeichneten Maße unterscheiden sich je nach Motormarke.

PKD 9390 IEC

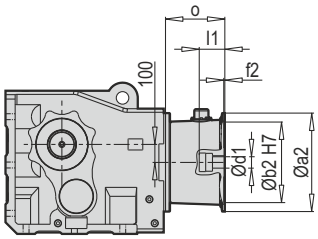

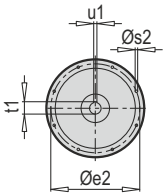

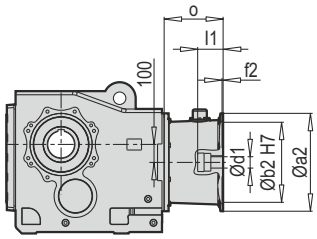

Tip / Type / Typ	IEC	Øa2	Øb2	Øe2	f2	Øs2	Ød1	l1	t1	u1	o
PKD 9390	**132**	300	230	265	5.0	M12	38	80	41.3	10	177
	160	350	250	300	6.0	M16	42	110	45.3	12	266
	180	350	250	300	6.0	M16	48	110	51.8	14	266
	200	400	300	350	6.0	M16	55	110	59.3	16	229
	225	450	350	400	6.0	M16	60	140	64.4	18	303
	250	550	450	500	6.0	M16	65	140	69.4	18	303
	280	550	450	500	6.0	M16	75	140	79.9	20	303
	315	660	550	600	7.0	M20	80	170	85.4	22	381

~ Kg	
IEC	**PKD 9390**
132	1527
160	1554
180	1554
200	1569
225	1585
250	1643
280	1643
315	1728

PKD 9390 W

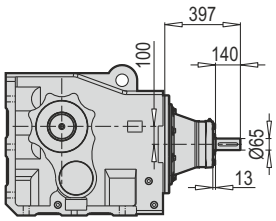

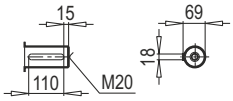

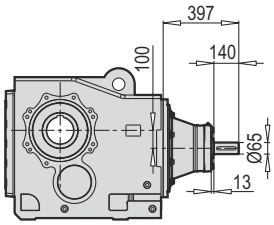

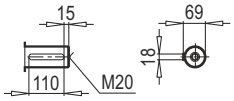

W ~ Kg	
PKD 9390	1606

PKD 9390 PAM B5/B14

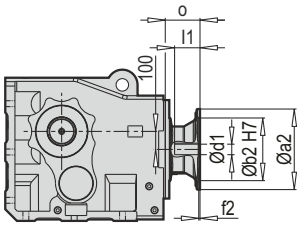

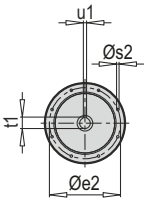

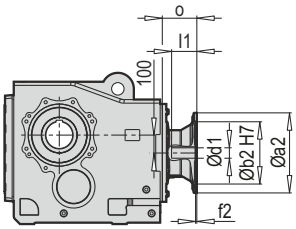

Tip / Type / Typ	PAM B5	Øa2	Øb2	Øe2	f2	Øs2	Ød1	l1	t1	u1	o
PKD 9390	**132**	300	230	265	5.0	M12	38	80	41.3	10	110
	160	350	250	300	6.0	M16	42	110	45.3	12	145
	180	350	250	300	6.0	M16	48	110	51.8	14	145
	200	400	300	350	6.0	M16	55	110	59.3	16	157
	225	450	350	400	6.0	M16	60	140	64.4	18	183
	250	550	450	500	6.0	M16	65	140	69.4	18	202
	280	550	450	500	6.0	M16	75	140	79.9	20	202

~ Kg	
PAM B5	PKD 9390
132	1426
160	1443
180	1443
200	1450
225	1460
250	1520
280	1520

Tip / Type / Typ	PAM B14	Øa2	Øb2	Øe2	f2	Øs2	Ød1	l1	t1	u1	o
PKD 9390	**132**	200	130	165	5.0	11	38	80	41.3	10	110

~ Kg	
PAM B14	PKD 9390
132	1421

PKD G 9390 TMA

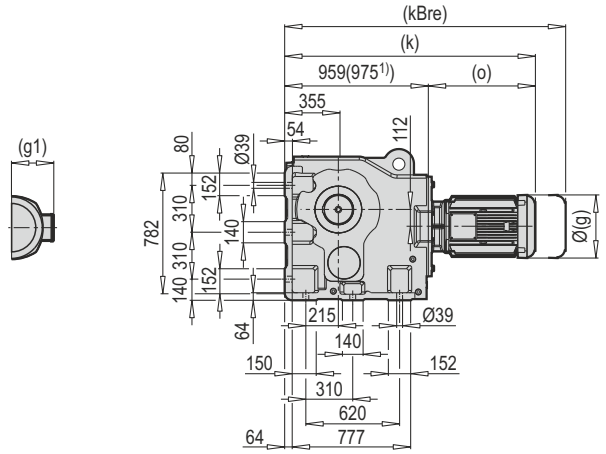

PKD G 9390 DA

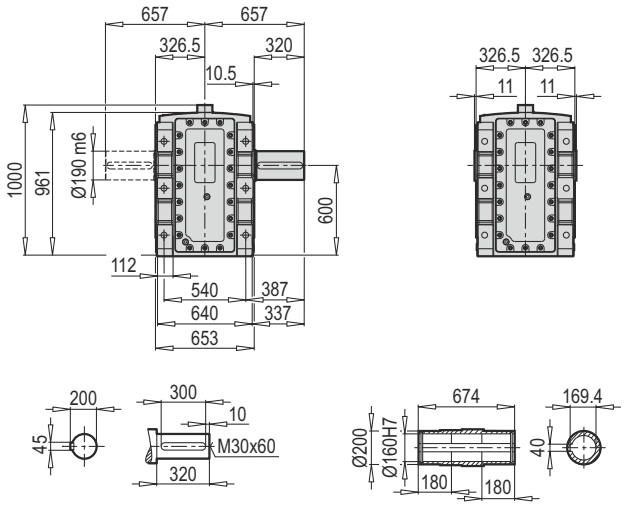

PKD G 9390 DG/KS/B5

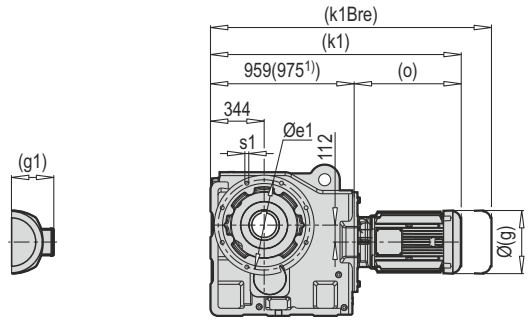

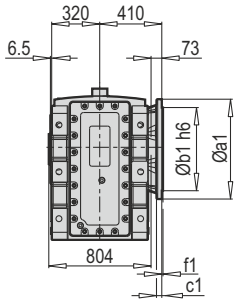

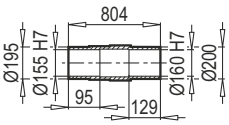

a1	b1	c1	e1	f1	s1
660	550	32	600	6	8x22

PKD G 9390 TMG/B5

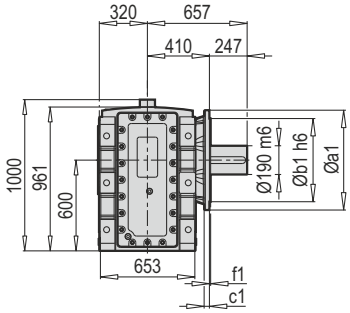

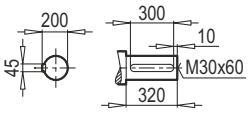

	160 L	180 M/L	200 L	225 M	250 M[1)]	280 M[1)]	315 S/M/L[2)]
g	322	363	363	456	495	527	-
g1	214	249	249	260	392	367	-
k/k1	1489	1583	1592	1662	1623	1864	-
kBre/k1Bre	1594	1702	1710	1834	1753	-	-
o	530	624	633	700	647	888	-

Not : (...) İşaretli olan ölçüler motor markasına göre farklılık gösterir. / Note: The dimensions which have (...) sign vary depending on the motor. / Hinweis: (...) Die gekennzeichneten Maße unterscheiden sich je nach Motormarke.

PKD G 9390 DG/KS/B14

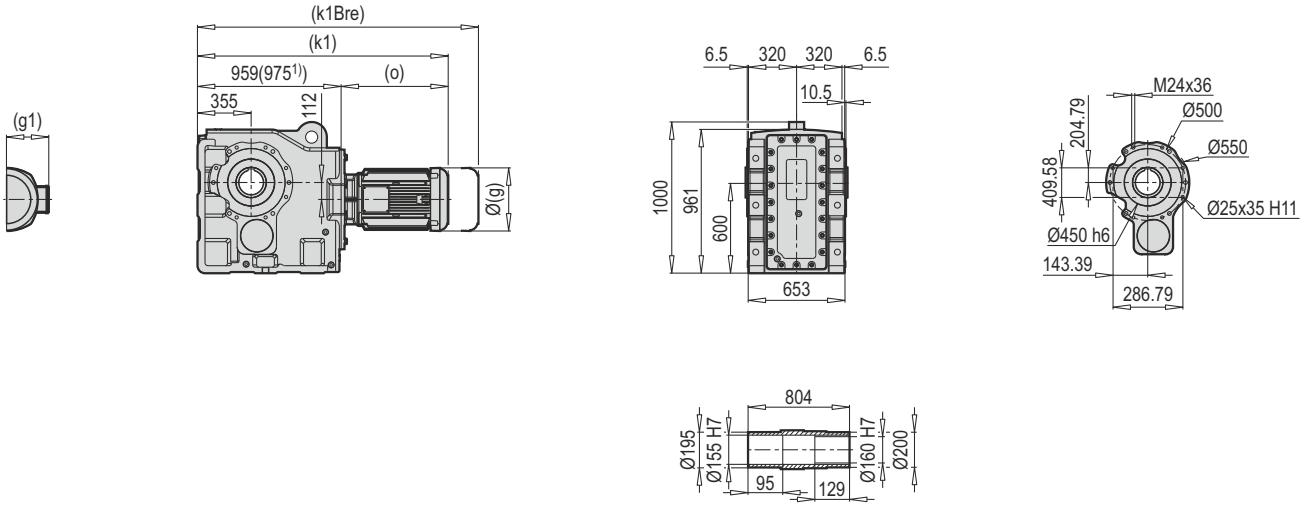

PKD G 9390 DG/KS

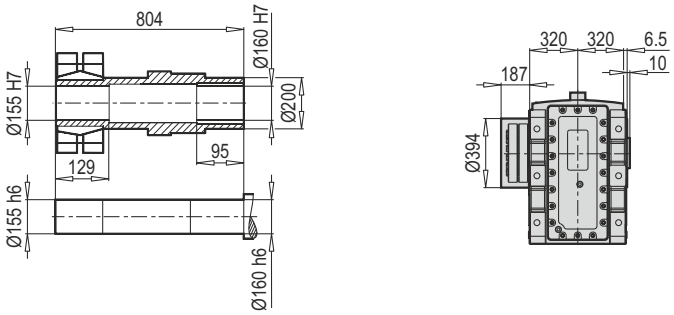

Konik sıktırma / Shrink disc / Schrumpfscheibe				Altıköşe başlı cıvata / Hexagonal screw / Sechskantschraube DIN 931 / DIN 933* 10.9Vz		
Tip / Type / Typ	M_{amax} (Nm)	s^{h6}	s^{f6}	dxl	Zs	MA (Nm)
KS 150/195	50000	2.71	2.61	M20x100*	14	490

	160 L	180 M/L	200 L	225 M	250 M[1)]	280 M[2)]	315 S/M/L[2)]
g	322	363	363	456	495	527	-
g1	214	249	249	260	392	367	-
k1	1489	1583	1592	1662	1623	1864	-
k1Bre	1594	1702	1710	1834	1753	-	-
o	530	624	633	700	647	888	-

Not : (...) İşaretli olan ölçüler motor markasına göre farklılık gösterir. / Note: The dimensions which have (...) sign vary depending on the motor. / Hinweis: (...) Die gekennzeichneten Maße unterscheiden sich je nach Motormarke.

PKD G 9390 IEC

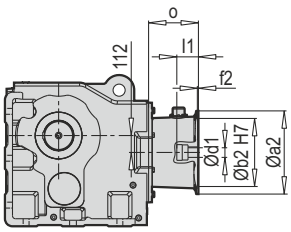

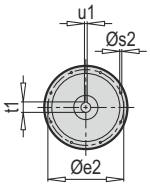

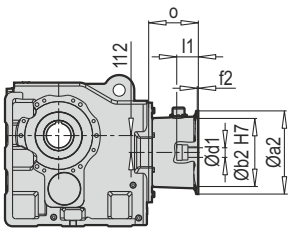

Tip / Type / Typ	IEC	Øa2	Øb2	Øe2	f2	Øs2	Ød1	l1	t1	u1	o
PKD G 9390	**132**	300	230	265	5.0	M12	38	80	41.3	10	177
	160	350	250	300	6.0	M16	42	110	45.3	12	266
	180	350	250	300	6.0	M16	48	110	51.8	14	266
	200	400	300	350	6.0	M16	55	110	59.3	16	229
	225	450	350	400	6.0	M16	60	140	64.4	18	303
	250	550	450	500	6.0	M16	65	140	69.4	18	303
	280	550	450	500	6.0	M16	75	140	79.9	20	303
	315	660	550	600	7.0	M20	80	170	85.4	22	381

~ Kg	
IEC	**PKD G 9390**
132	1527
160	1554
180	1554
200	1569
225	1585
250	1643
280	1643
315	1750

PKD G 9390 W

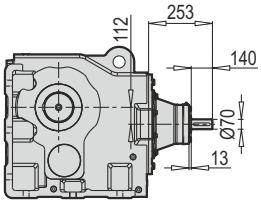

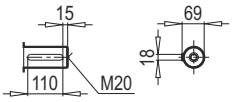

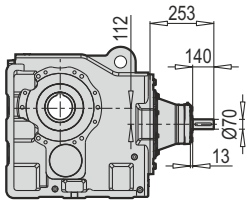

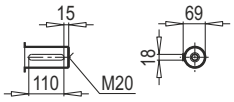

W ~ Kg	
PKD G 9390	1606

PKD G 9390 PAM B5/B14

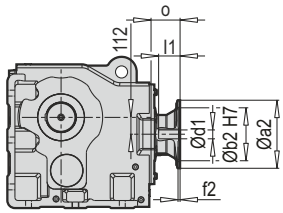

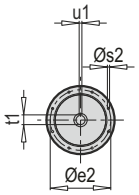

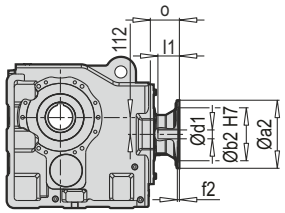

Tip / Type / Typ	PAM B5	Øa2	Øb2	Øe2	f2	Øs2	Ød1	l1	t1	u1	o
PKD G 9390	**132**	300	230	265	5.0	M12	38	80	41.3	10	110
	160	350	250	300	6.0	M16	42	110	45.3	12	145
	180	350	250	300	6.0	M16	48	110	51.8	14	145
	200	400	300	350	6.0	M16	55	110	59.3	16	157
	225	450	350	400	6.0	M16	60	140	64.4	18	183
	250	550	450	500	6.0	M16	65	140	69.4	18	202
	280	550	450	500	6.0	M16	75	140	79.9	20	202

~ Kg	
PAM B5	PKD G 9390
132	1501
160	1518
180	1518
200	1525
225	1535
250	1595
280	1595

Tip / Type / Typ	PAM B14	Øa2	Øb2	Øe2	f2	Øs2	Ød1	l1	t1	u1	o
PKD G 9390	**132**	200	130	165	5.0	11	38	80	41.3	10	110

~ Kg	
PAM B14	PKD G 9390
132	1496

PKD 6390/32 PKD 6390/42
PKD 7390/32 PKD 7390/42

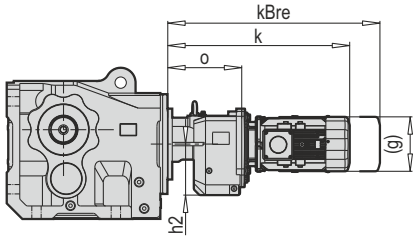

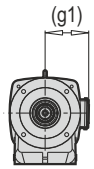

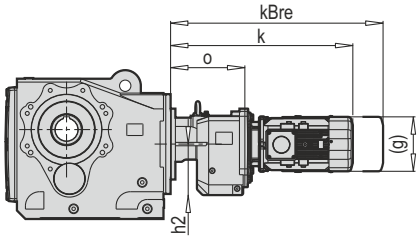

Tip / Type / Typ	Motor	g	g1	h2	o	k	kBre
PKD 6390/32 **PKD 7390/32**	71 M 80 M 90 S/L 100 L 112 M 132 S	140 172 182 202 220 271	119 131 130 153 159 189	155	219	456 479 542 596 591 666	516 549 613 680 691 765/793
PKD 6390/42 **PKD 7390/42**	100 L 112 M 132 S/M 160 M	182 202 220 271	130 153 159 188	180	261	591 642 641 703	659 726 741 807/835

Not : (...) İşaretli olan ölçüler motor markasına göre farklılık gösterir. / Note: The dimensions which have (...) sign vary depending on the motor. /
Hinweis: (...) Die gekennzeichneten Maße unterscheiden sich je nach Motormarke.

PKD 6390/32 PKD 6390/42
PKD 7390/32 PKD 7390/42

IEC

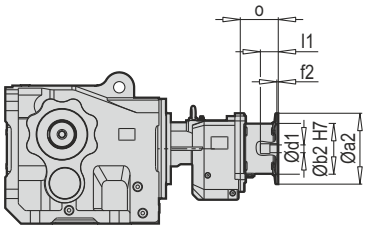

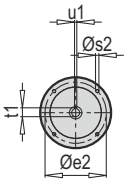

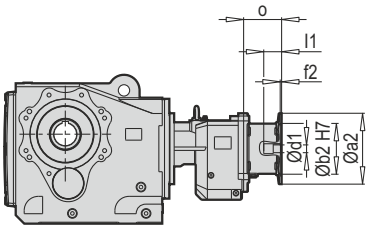

Tip / Type / Typ	IEC	Øa2	Øb2	Øe2	f2	Øs2	Ød1	l1	t1	u1	PKD 6390/32 7390/32 o	PKD 6390/42 7390/42 o
PKD 6390/32-7390/32	**71**	160	110	130	4.0	M8	14	30	16.3	5	88	-
PKD 6390/32-7390/32	**80**	200	130	165	4.0	M10	19	40	21.8	6	107	-
PKD 6390/32-7390/32-6390/42-7390/42	**90**	200	130	165	4.0	M10	24	50	27.3	8	107	107
PKD 6390/32-7390/32-6390/42-7390/42	**100**	250	180	215	5.0	M12	28	60	31.3	8	124	133
PKD 6390/32-7390/32-6390/42-7390/42	**112**	250	180	215	5.0	M12	28	60	31.3	8	124	133
PKD 6390/32-7390/32-6390/42-7390/42	**132**	300	230	265	5.0	M12	38	80	41.3	10	156	190
PKD 6390/42-7390/42	**160**	350	250	300	6.0	M16	42	110	45.3	12	-	194

~ kg		
IEC	PKD 6390/32 PKD 7390/32	PKD 6390/42 PKD 7390/42
71	380	-
80	384	-
90	384	405
100	389	413
112	389	413
132	398	427
160	-	438

PKD 6390/32 PKD 6390/42 PKD 7390/32 PKD 7390/42 W

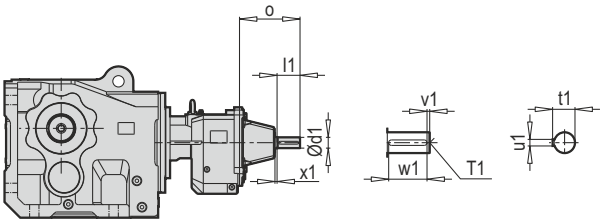

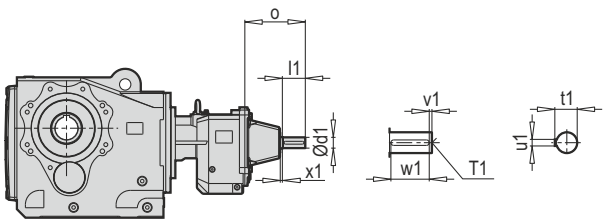

Tip / Type / Typ	Ød1	x1	l1	o	T1	t1	u1	v1	w1
PKD 6390/32	24	8	50	172	M8	27.0	8	5	40
PKD 7390/32	24	8	50	172	M8	27.0	8	5	40
PKD 6390/42	38	8	80	213	M12	41.0	10	5	70
PKD 7390/42	38	8	80	213	M12	41.0	10	5	70

W ~ Kg	
PKD 6390/32	382
PKD 7390/32	382
PKD 6390/42	411
PKD 7390/42	411

PKD 6390/32 PKD 6390/42 PKD 7390/32 PKD 7390/42 PAM B5/B14

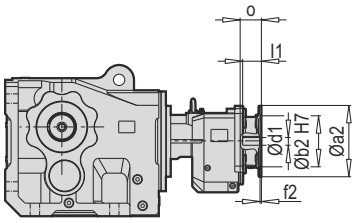

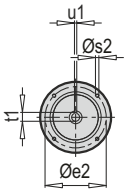

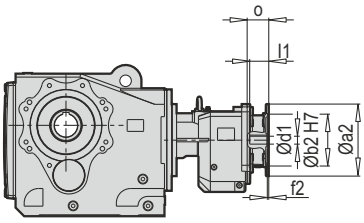

Tip / Type / Typ	PAM B5	Øa2	Øb2	Øe2	f2	Øs2	Ød1	l1	t1	u1	o
PKD 6390/32-7390/32	71	160	110	130	4.0	M8	14	30	16.3	5	88
PKD 6390/32-7390/32	80	200	130	165	4.0	M10	19	40	21.8	6	72
PKD 6390/32-7390/32-6390/42-7390/42	90	200	130	165	4.0	M10	24	50	27.3	8	72
PKD 6390/32-7390/32-6390/42-7390/42	100	250	180	215	5.0	M12	28	60	31.3	8	75
PKD 6390/32-7390/32-6390/42-7390/42	112	250	180	215	5.0	M12	28	60	31.3	8	75
PKD 6390/32-7390/32-6390/42-7390/42	132	300	230	265	5.0	M12	38	80	41.3	10	94
PKD 6390/42-7390/42	160	350	250	300	6.0	M16	42	110	45.3	12	120

~ Kg				
PAM B5	PKD 6390/32	PKD 6390/42	PKD 7390/32	PKD 7390/42
71	361	-	361	-
80	362	-	362	-
90	362	382	362	382
100	363	383	363	383
112	363	383	363	383
132	373	392	373	392
160	-	400	-	400

Tip / Type / Typ	PAM B14	Øa2	Øb2	Øe2	f2	Øs2	Ød1	l1	t1	u1	o
PKD 6390/32-7390/32	71	105	70	85	4.0	7	14	30	16.3	5	88
PKD 6390/32-7390/32	80	120	80	100	4.0	7	19	40	21.8	6	72
PKD 6390/32-7390/32-6390/42-7390/42	90	140	95	115	4.0	9	24	50	27.3	8	72
PKD 6390/32-7390/32-6390/42-7390/42	100	160	110	130	5.0	9	28	60	31.3	8	75
PKD 6390/32-7390/32-6390/42-7390/42	112	160	110	130	5.0	9	28	60	31.3	8	75
PKD 6390/32-7390/32-6390/42-7390/42	132	200	130	165	5.0	11	38	80	41.3	10	94

~ Kg				
PAM B14	PKD 6390/32	PKD 6390/42	PKD 7390/32	PKD 7390/42
71	359	-	359	-
80	360	-	360	-
90	360	381	360	381
100	362	382	362	382
112	362	382	362	382
132	366	387	366	387

PKD 8390/42 **PKD 8390/52**
PKD G 8390/52
PKD 9390/52

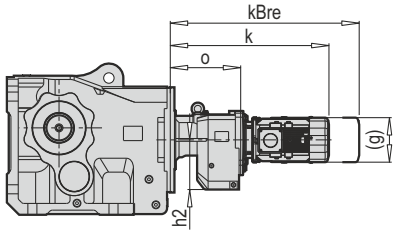

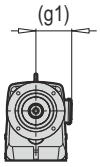

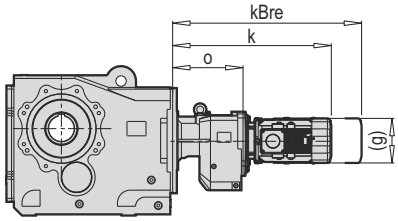

Tip / Type / Typ	Motor	g	g1	h2	o	k	kBre
PKD 8390/42	90 S/L 100 L 112 M 132 S/M 160 M	182 202 220 271 322	130 153 159 188 214	180	261	591 642 641 703 791	659 726 741 802/822 851
PKD 8390/52	100 L 112 M 132 S/M 160 M/L 180 M	202 220 271 322 363	153 159 188 214 249	214	300	681 680 742 830 924	765 780 841/861 935 1025
PKD G 8390/52 **PKD 9390/52**	90 S/L 100 L 112 M 132 S/M 160 M/L 180 M/L	182 202 220 271 322 363	130 153 159 188 214 249	214	300	630 681 680 742 830 924	698 765 780 841/861 935 1025

Not : (...) İşaretli olan ölçüler motor markasına göre farklılık gösterir. / Note: The dimensions which have (...) sign vary depending on the motor. /
Hinweis: (...) Die gekennzeichneten Maße unterscheiden sich je nach Motormarke.

PKD 8390/42 **PKD 8390/52**
PKD G 8390/52
PKD 9390/52

IEC

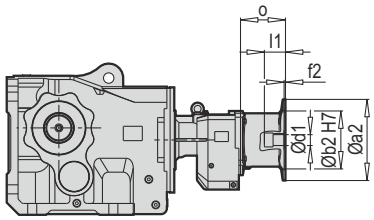

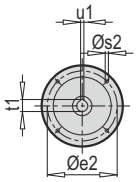

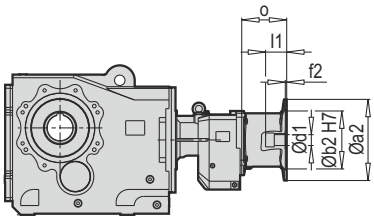

Tip / Type / Typ	IEC	Øa2	Øb2	Øe2	f2	Øs2	Ød1	l1	t1	u1	PKD 8390/42 o	PKD 8390/52 o	PKD G8390/52 9390/52 o
PKD 8390/42-G8390/52-9390/52	**90**	200	130	165	4.0	M10	24	50	27.3	8	109	-	109
PKD 8390/42-8390/52-G8390/52-9390/52	**100**	250	180	215	5.0	M12	28	60	31.3	8	133	133	133
PKD 8390/42-8390/52-G8390/52-9390/52	**112**	250	180	215	5.0	M12	28	60	31.3	8	133	133	133
PKD 8390/42-8390/52-G8390/52-9390/52	**132**	300	230	265	5.0	M12	38	80	41.3	10	190	190	190
PKD 8390/42-8390/52-G8390/52-9390/52	**160**	350	250	300	6.0	M16	42	110	45.3	12	194	194	194
PKD 8390/52-G8390/52-9390/52	**180**	350	250	300	6.0	M16	48	110	51.8	14	-	194	194

~ Kg				
IEC	PKD 8390/42	PKD 8390/52	PKD G 8390/52	PKD 9390/52
90	685	-	976	1580
100	692	719	984	1588
112	692	719	984	1588
132	707	734	999	1603
160	718	744	1009	1613
180	-	744	1009	1613

PKD 8390/42 **PKD 8390/52**
PKD G 8390/52
PKD 9390/52

W

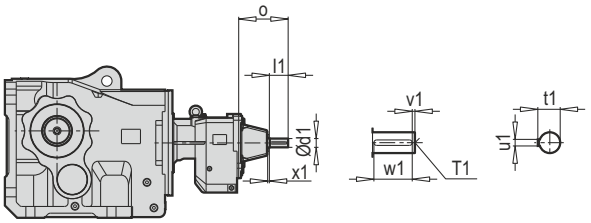

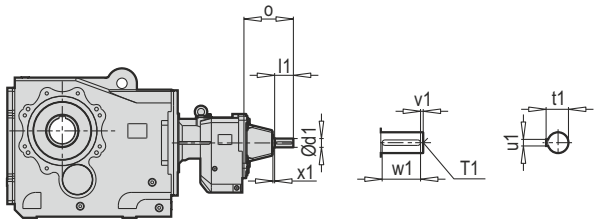

Tip / Type / Typ	Ød1	x1	l1	o	T1	t1	u1	v1	w1
PKD 8390/42	24	8	50	172	M8	27.0	8	5	40
PKD 8390/52	24	8	50	172	M8	27.0	8	5	40
PKD G 8390/52	38	8	80	213	M12	41.0	10	5	70
PKD 9390/52	38	8	80	213	M12	41.0	10	5	70

W ~ Kg	
PKD 8390/42	690
PKD 8390/52	717
PKD G 8390/52	982
PKD 9390/52	1586

PKD 8390/42 **PKD 8390/52**
PKD G 8390/52
PKD 9390/52

PAM B5/B14

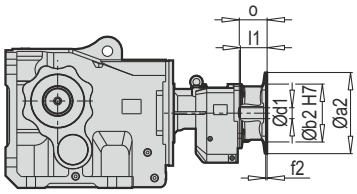

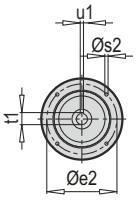

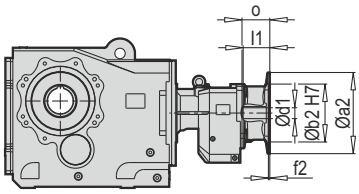

Tip / Type / Typ	PAM B5	Øa2	Øb2	Øe2	f2	Øs2	Ød1	l1	t1	u1	o
PKD 8390/42-G8390/52-9390/52	90	200	130	165	4.0	M10	24	50	27.3	8	72
PKD 8390/42-8390/52-G8390/52-9390/52	100	250	180	215	5.0	M12	28	60	31.3	8	75
PKD 8390/42-8390/52-G8390/52-9390/52	112	250	180	215	5.0	M12	28	60	31.3	8	75
PKD 8390/42-8390/52-G8390/52-9390/52	132	300	230	265	5.0	M12	38	80	41.3	10	94
PKD 8390/42-8390/52-G8390/52-9390/52	160	350	250	300	6.0	M16	42	110	45.3	12	120
PKD 8390/52-G8390/52-9390/52	180	350	250	300	6.0	M16	48	110	51.8	14	120

~ Kg				
PAM B5	PKD 8390/42	PKD 8390/52	PKD G 8390/52	PKD 9390/52
90	642	-	917	1487
100	643	668	918	1488
112	643	668	918	1488
132	652	677	927	1597
160	660	685	935	1605
180	-	685	935	1605

Tip / Type / Typ	PAM B14	Øa2	Øb2	Øe2	f2	Øs2	Ød1	l1	t1	u1	o
PKD 8390/42-G8390/52-9390/52	90	140	95	115	4.0	9	24	50	27.3	8	72
PKD 8390/42-8390/52-G8390/52-9390/52	100	160	110	130	5.0	9	28	60	31.3	8	75
PKD 8390/42-8390/52-G8390/52-9390/52	112	160	110	130	5.0	9	28	60	31.3	8	75
PKD 8390/42-8390/52-G8390/52-9390/52	132	200	130	165	5.0	11	38	80	41.3	10	94

~ Kg				
PAM B14	PKD 8390/42	PKD 8390/52	PKD G 8390/52	PKD 9390/52
90	641	-	916	1486
100	642	667	917	1487
112	642	667	917	1487
132	647	672	923	1492

PKD G 9390/62 PKD G 9390/63

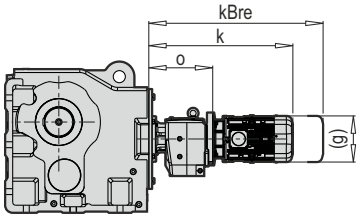

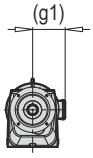

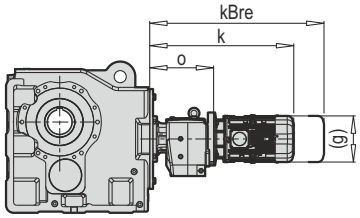

Tip / Type / Typ	Motor	g	g1	h2	o	k	kBre
PKD G9390/62	100 L 112 M 132 S/M 160 M/L 180 M/L 200 L 225 M	202 220 271 322 363 363 456	153 159 188 214 249 249 260	245	401	781 779 846 931 1025 1033 1102	864 879 945/965 1035 1143 1152 1274
PKD G9390/63	90 S/L 100 L 112 M 132 S	182 202 220 271	130 153 159 188	245	375	704 756 754 816	772 839 854 916/936

Not : (...) İşaretli olan ölçüler motor markasına göre farklılık gösterir. / Note: The dimensions which have (...) sign vary depending on the motor. / Hinweis: (...) Die gekennzeichneten Maße unterscheiden sich je nach Motormarke.

PKD G 9390/62 PKD G 9390/63 IEC

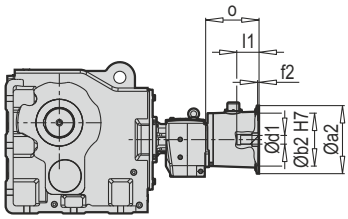

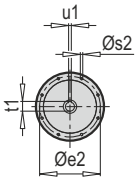

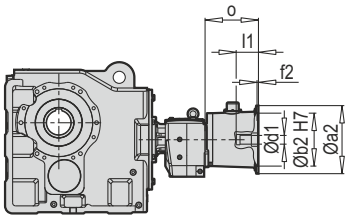

Tip / Type / Typ	IEC	Øa2	Øb2	Øe2	f2	Øs2	Ød1	l1	t1	u1	PKD G 9390/62 o	PKD G 9390/63 o
PKD G9390/63	**90**	200	130	165	4.0	M10	24	50	27.3	8	-	109
PKD G9390/62-G9390/63	**100**	250	180	215	5.0	M12	28	60	31.3	8	127	133
PKD G9390/62-G9390/63	**112**	250	180	215	5.0	M12	28	60	31.3	8	127	133
PKD G9390/62-G9390/63	**132**	300	230	265	5.0	M12	38	80	41.3	10	177	190
PKD G9390/62-G9390/63	**160**	350	250	300	6.0	M16	42	110	45.3	12	266	194
PKD G9390/62-G9390/63	**180**	350	250	300	6.0	M16	48	110	51.8	14	266	194
PKD G9390/62	**200**	400	300	350	6.0	M16	55	110	59.3	16	229	-
PKD G9390/62	**225**	450	350	400	6.0	M16	60	140	64.4	18	303	-

~ Kg		
IEC	PKD G 9390/62	PKD G 9390/63
90	-	1886
100	1902	1894
112	1902	1894
132	1916	1908
160	1942	1919
180	1942	1919
200	1957	-
225	1972	-

PKD G 9390/62 **PKD G 9390/63**

W

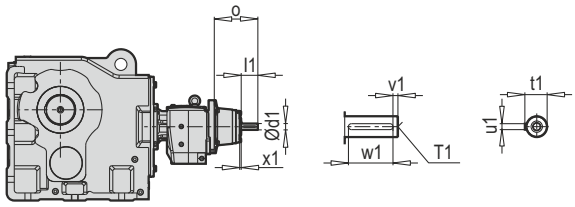

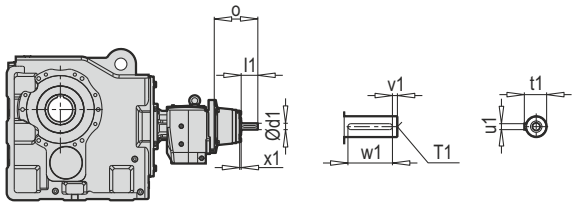

Tip / Type / Typ	Ød1	x1	l1	o	T1	t1	u1	v1	w1
PKD G 9390/62	42	8	110	288	M16	45.0	12	10	90
PKD G 9390/63	38	8	80	213	M12	41.0	10	5	70

W ~ Kg	
PKD G 9390/62	1891
PKD G 9390/63	1915

PKD G 9390/62 **PKD G 9390/63**

PAM B5/B14

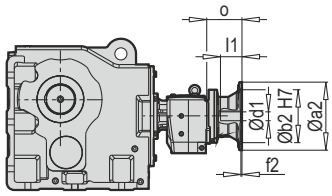

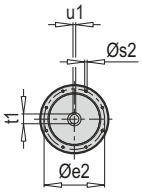

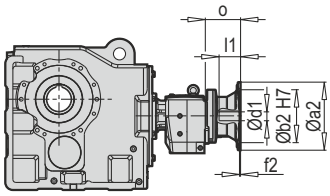

Tip / Type / Typ	PAM B5	Øa2	Øb2	Øe2	f2	Øs2	Ød1	l1	t1	u1	o (62)	o (63)
PKD G9390/63	**90**	200	130	165	4.0	M10	24	50	27.3	8	-	72
PKD G9390/62-G9390/63	**100**	250	180	215	5.0	M12	28	60	31.3	8	75	75
PKD G9390/62-G9390/63	**112**	250	180	215	5.0	M12	28	60	31.3	8	75	75
PKD G9390/62-G9390/63	**132**	300	230	265	5.0	M12	38	80	41.3	10	110	94
PKD G9390/62-G9390/63	**160**	350	250	300	6.0	M16	42	110	45.3	12	145	120
PKD G9390/62-G9390/63	**180**	350	250	300	6.0	M16	48	110	51.8	14	145	120
PKD G9390/62	**200**	400	300	350	6.0	M16	55	110	59.3	16	157	-
PKD G9390/62	**225**	450	350	400	6.0	M16	60	140	64.4	18	183	-

~ Kg		
PAM B5	PKD G 9390/62	PKD G 9390/63
90	-	1879
100	1879	1880
112	1879	1880
132	1890	1889
160	1907	1897
180	1907	1897
200	1914	-
225	1924	-

Tip / Type / Typ	PAM B14	Øa2	Øb2	Øe2	f2	Øs2	Ød1	l1	t1	u1	o (62)	o (63)
PKD G9390/63	**90**	140	95	115	4.0	9	24	50	27.3	8	-	72
PKD G9390/62-G9390/63	**100**	160	110	130	5.0	9	28	60	31.3	8	75	75
PKD G9390/62-G9390/63	**112**	160	110	130	5.0	9	28	60	31.3	8	75	75
PKD G9390/62-G9390/63	**132**	200	130	165	5.0	11	38	80	41.3	10	110	94

~ Kg		
PAM B14	PKD G 9390/62	PKD G 9390/63
90	-	1878
100	1878	1879
112	1878	1879
132	1885	1884

W - IEC ve PAM Adaptörü Seçim Tabloları

Selection Of W-IEC and PAM Adapters

Auswahltabelle von W - PAM - IEC Adapters

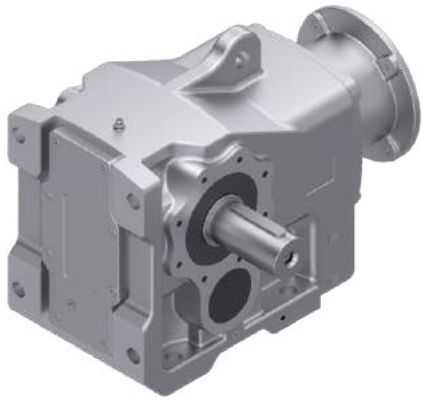

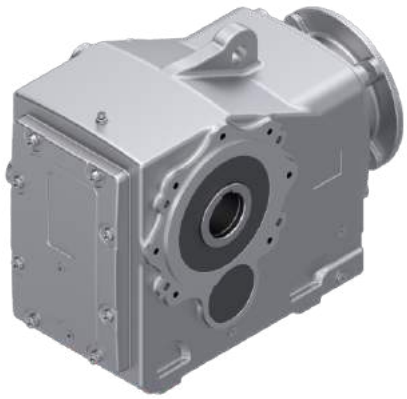

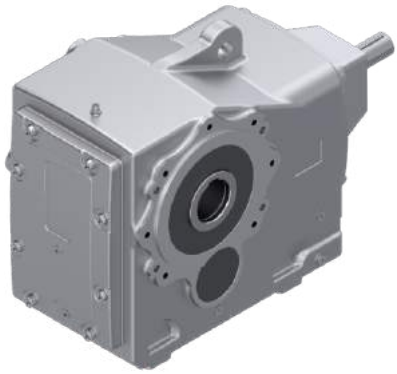

PKD

TR TEKNİK AÇIKLAMALAR

EN TECHNICAL DESCRIPTIONS

DE TECHNISCHE BESCHREIBUNGEN

W, IEC ve PAM adaptörü performans tabloları yapısı:
Performance tables for W - IEC and PAM adapter type
Der Aufbau der Leistungstabelle für W - IEC und PAM-Adapter

IEC'li yada PAM adaptörlü girişler için geçerli olan servis faktörü doğrudan motor montajlı redüktörler ile aynıdır. IEC ve PAM montajlı redüktörlerin servis faktörü fB motorlu seçim sayfalarından bulunabilir.

Service factor fB could be checked from selection of geared motor tables. Because this value is the same for geared motor and geared motor with IEC-PAM adapters

Der Betriebsfaktor fB für Antriebe mit IEC- oder PAM-Adapter ist der gleiche wie für Getriebe mit Motordirektanschluss. Den Betriebsfaktor fB für Getriebe mit IEC- und PAM-Adapter finden Sie auf den Motorauswahltabellen.

Max. Giriş Gücü
Max. Input Power
Max. Antriebsleistung

Tip Type Typ	i_{ges}	4-pol. 50 Hz 1400 rpm n_2 [min^{-1}]	M_{amax} f_B=1 4 - pol. [Nm]	W P_{1max} - $f_B \geq 1$ 4 - pol. 1400rpm [kW]	6 - pol. 930rpm [kW]	8 - pol. 700rpm [kW]	12 - pol. 465rpm [kW]	IEC - PAM f_B ⇨ 📖 79 - 183							
PKD 3390	296.10	4.70	1550	0.77	0.51	0.38	0.25	71	80	90*					
	250.01	5.60	1550	0.91	0.60	0.45	0.30	71	80	90*					
	234.13	6.00	1550	0.97	0.64	0.49	0.32		80	90*					
	197.69	7.10	1550	1.15	0.76	0.57	0.38		80	90*					
	188.22	7.40	1550	1.21	0.80	0.60	0.40			90*	100*	112*			
	158.92	8.80	1550	1.43	0.95	0.71	0.47			90*	100*	112*			
	139.49	10.00	1550	1.63	1.08	0.81	0.54								
				.	.	.	.								
				.	.	.	.								
				9.20	*6.07*	*4.60*	*3.04*								
				9.20	*6.07*	*4.60*	*3.04*								

IEC motor büyüklükleri ve IEC standart çıkışları DIN EN 50347' e göredir.
IEC motor sizes and IEC standart outputs as per DIN EN 50347
IEC-Motorgrößen und IEC-Standart-Abtriebe entsprechen DIN EN 50347.

Tip W azami tahrik gücü hesaplanırken italik olmayan değerler alınmıştır. P_{1max} ile f_B = 1

P_{1max} value which is non-italicis calculated when service factor f_B is equal to one.

Bei der Berechnung der maximalen Antriebsleistung des Typs W wurden nicht kursive Werte verwendet. P_{1max} und f_B = 1

Yıldız işareti : Dikkat Tip W sütunundaki P_{1max} değerlerini aşmamalıdır.

Asterix indicates:
caution, don't exceed the max. driver power P_{1max} as per Type W column

*: Achtung P1max in Spalte W darf nicht überschritten werden.

P_{1max} hesaplanırken italik olan değerlerde f_B >1 alınmıştır.

P_{1max} value which is *italic*, is calculated when service factor f_B is greater than one.

Bei der Berechnung von P_{1max} wurden für kursiv gedruckte Werte f_B >1verwendet.

Max.çıkış momenti
Max.output torque
Abtriebsdrehmoment

71	80
71	80
	80
	80

Rakamlı alanlar IEC adaptörünün, IEC motor büyüklüğü ve tahvil oranına uygun olduğunu belirtir.

This area which is colorless is shown IEC adapter is applicable for this IEC motor size and reduction ratio.

Digitale Bereichen zeigen, dass IEC Adapter für IEC Motorgröße und der Wechselkurse ist.

Çıkış Devri
Output speed
Leistungsgeschwindigkeit

Redüktör Tahvili
Reduction ratio
Verkleinerungsfaktor

Redüktör Tipi
Gear unit type
Getriebetyp

Tip Type Typ	i_{ges}	4-pol. 50 Hz 1400 rpm n_2 [min^{-1}]	M_{amax} f_B=1 4 - pol. [Nm]	W P_{1max} - $f_B \geq 1$				IEC - PAM f_B ⇨ 📖 79 - 183							
				4 - pol. 1400rpm [kW]	6 - pol. 930rpm [kW]	8 - pol. 700rpm [kW]	12 - pol. 465rpm [kW]								
PKD A 0290	**54.62**	**25.6**	50	0.13	0.09	0.07	0.04	63*							
W ↔ mm 📖 178	**47.79**	**29.3**	45	0.14	0.09	0.07	0.05	63*							
	39.64	**35.3**	80	0.30	0.20	0.15	0.10	63	71*						
+	**34.69**	**40.4**	75	0.32	0.21	0.16	0.11	63	71*						
IEC - PAM ↔ mm 📖 178 - 179	**30.13**	**46.5**	70	0.34	0.23	0.17	0.11	63	71*	80*					
	26.36	**53.1**	90	0.50	0.33	0.25	0.17	63	71	80*					
	23.26	**60.2**	90	0.57	0.38	0.28	0.19	63	71	80*					
	20.35	**68.8**	90	0.65	0.43	0.32	0.22	63	71	80*					
	17.58	**79.7**	60	0.50	0.33	0.25	0.17	63	71	80*					
	13.57	**103.2**	75	0.81	0.54	0.41	0.27	63	71	80					
	11.05	126.7	90	1.19	0.79	0.60	0.40	63	71	80					
	9.67	144.8	90	1.36	0.91	0.68	0.45	63	71	80					
	8.99	155.8	90	1.47	0.98	0.73	0.49	63	71	80					
	7.86	178.1	90	*1.50*	*0.99*	*0.75*	*0.50*	63	71	80					
	6.45	217.2	85	*1.50*	*0.99*	*0.75*	*0.50*	63	71	80					
	5.78	242.2	80	*1.50*	*0.99*	*0.75*	*0.50*	63	71	80	90				
	5.24	267.1	80	*1.50*	*0.99*	*0.75*	*0.50*	63	71	80					
	3.85	363.2	80	*1.50*	*0.99*	*0.75*	*0.50*	63	71	80	90				
PKD B 0290	**72.24**	**19.4**	55	0.11	0.07	0.06	0.04	63*							
W ↔ mm 📖 182	**63.21**	**22.1**	50	0.12	0.08	0.06	0.04	63*							
	53.52	**26.2**	90	0.25	0.16	0.12	0.08	63	71*						
+	**46.83**	**29.9**	75	0.23	0.16	0.12	0.08	63	71*						
IEC - PAM ↔ mm 📖 182 - 183	**41.23**	**34.0**	115	0.41	0.27	0.20	0.14	63	71	80*					
	36.08	**38.8**	100	0.41	0.27	0.20	0.13	63	71	80*					
	32.24	**43.4**	120	0.55	0.36	0.27	0.18	63	71	80*					
	28.21	**49.6**	120	0.62	0.41	0.31	0.21	63	71	80*					
	25.99	**53.9**	120	0.68	0.45	0.34	0.22			80*	90*				
	22.74	**61.6**	120	0.77	0.51	0.39	0.26			80	90*				
	18.81	**74.4**	85	0.66	0.44	0.33	0.22	63	71	80*					
	15.62	89.6	120	1.13	0.75	0.56	0.37	63	71	80	90*				
	13.48	103.9	120	1.31	0.87	0.65	0.43	63	71	80	90*				
	11.79	118.7	115	1.43	0.95	0.71	0.47	63	71	80	90*				
	10.35	135.3	110	*1.50*	*0.99*	0.75	*0.50*	63	71	80	90				
	9.06	154.6	105	*1.50*	*0.99*	*0.75*	*0.50*	63	71	80	90				
	8.00	174.9	100	*1.50*	*0.99*	*0.75*	*0.50*	63	71	80	90				
	7.05	198.6	95	*1.50*	*0.99*	*0.75*	*0.50*	63	71	80	90				
	6.04	231.9	90	*1.50*	*0.99*	*0.75*	*0.50*	63	71	80	90				
	5.34	262.3	85	*1.50*	*0.99*	*0.75*	*0.50*	63	71	80	90				
	4.77	293.8	80	*1.50*	*0.99*	*0.75*	*0.50*	63	71	80	90				
	4.11	340.5	75	*1.50*	*0.99*	*0.75*	*0.50*	63	71	80	90				

	IEC - PAM bağlantısı yoktur / No IEC - PAM assembling on empty fields / Keine IEC - PAM-Verbindung
63	**IEC - PAM bağlantısı yapılır /** IEC - PAM assembling available on numbered fields / IEC - PAM-Verbindung möglich
80*	**IEC - PAM bağlantısı yapılacaksa P_{1max} değerleri aşılmamalıdır -** Do not exceed the P_{1max} values indicated on fields with asterix / Bei IEC - PAM-Verbindungen, sollten die P_{1max}-Werte nicht überschritten werden.

Tip Type Typ	i_{ges}	4-pol. 50 Hz 1400 rpm n_2 [min^{-1}]	M_{amax} f_B=1 4 - pol. [Nm]	W P_{1max} - $f_B \geq 1$ 4 - pol. 1400rpm [kW]	6 - pol. 930rpm [kW]	8 - pol. 700rpm [kW]	12 - pol. 465rpm [kW]	IEC - PAM f_B ⇨ 79 - 183							
PKD C 1290 W mm 186 + IEC - PAM mm 186 - 187	**62.77**	**22.3**	125	0.29	0.19	0.15	0.10	63	71*						
	54.92	**25.5**	110	0.29	0.20	0.15	0.10	63	71*						
	49.69	**28.2**	170	0.50	0.33	0.25	0.17	63	71	80*					
	43.48	**32.2**	150	0.51	0.34	0.25	0.17	63	71	80*					
	38.59	**36.3**	190	0.72	0.48	0.36	0.24	63	71	80*					
	33.76	**41.5**	185	0.80	0.53	0.40	0.27	63	71	80					
	31.27	**44.8**	190	0.89	0.59	0.45	0.30			80	90*				
	27.36	**51.2**	230	1.23	0.82	0.62	0.41			80	90*				
	24.32	**57.6**	210	1.27	0.84	0.63	0.42			80	90*				
	21.94	**63.8**	195	1.30	0.87	0.65	0.43			80	90*	100*			
	19.19	**72.9**	230	1.76	1.17	0.88	0.58			80	90	100*			
	17.06	**82.1**	230	1.98	1.31	0.99	0.66			80	90	100*			
	14.66	95.5	190	1.90	1.26	0.95	0.63	63	71	80	90				
	12.99	107.7	195	2.20	1.46	1.10	0.73	63	71	80	90	100*			
	11.37	123.1	195	2.51	1.67	1.26	0.84	63	71	80	90	100*			
	10.81	129.5	180	2.44	1.62	1.22	0.81	63	71	80	90	100*			
	9.47	147.8	175	2.71	1.80	1.35	0.90	63	71	80	90	100*			
	8.29	169.0	175	*3.00*	*1.98*	*1.50*	0.99	63	71	80	90	100			
	7.29	192.0	165	*3.00*	*1.98*	*1.50*	0.99	63	71	80	90	100			
	6.48	216.0	160	*3.00*	*1.98*	*1.50*	0.99	63	71	80	90	100			
	5.97	234.4	155	*3.00*	*1.98*	*1.50*	0.99			80	90	100			
	5.31	263.6	145	*3.00*	*1.98*	*1.50*	0.99			80	90	100			
PKD F 4290 W mm 190 + IEC - PAM mm 190 - 191	**59.20**	**23.6**	375	0.93	0.62	0.46	0.31	63	71	80					
	51.80	**27.0**	345	0.98	0.65	0.49	0.32	63	71	80					
	48.01	**29.2**	375	1.15	0.76	0.57	0.38			80	90*				
	42.01	**33.3**	340	1.19	0.79	0.59	0.39			80	90*				
	37.34	**37.5**	330	1.30	0.86	0.65	0.43			80	90*				
	34.15	**41.0**	380	1.63	1.08	0.82	0.54			80	90	100*	112*		
	29.88	**46.8**	340	1.67	1.11	0.83	0.55			80	90	100*	112*		
	26.56	52.7	330	1.82	1.21	0.91	0.60			80	90	100*	112*		
	23.26	60.2	370	2.33	1.55	1.17	0.77					100*	112*	132*	
	20.35	68.8	340	2.45	1.63	1.22	0.81					100*	112*	132*	
	18.09	77.4	320	2.59	1.72	1.30	0.86					100*	112*	132*	
	16.08	87.1	370	3.37	2.24	1.69	1.12	63	71	80	90	100	112*	132*	
	14.07	99.5	340	3.54	2.35	1.77	1.18	63	71	80	90	100	112*	132*	
	12.63	110.8	340	3.95	2.62	1.97	1.31	63	71	80	90	100	112*	132*	
	10.98	127.5	335	4.47	2.97	2.24	1.48			80	90	100	112	132*	
	9.76	143.4	320	4.80	3.19	2.40	1.60			80	90	100	112	132*	
	8.67	161.4	320	5.41	3.59	2.70	1.80			80	90	100	112	132*	
	7.71	181.6	310	5.90	3.92	2.95	1.96					100	112	132*	
	6.80	205.9	295	6.36	4.23	3.18	2.11					100	112	132*	
	5.92	236.5	280	6.93	4.61	3.47	2.30					100	112	132*	
	5.45	256.8	265	7.13	4.73	3.56	2.37							132*	
	4.85	288.9	265	8.02	5.33	4.01	2.66							132*	

	IEC - PAM bağlantısı yoktur / No IEC - PAM assembling on empty fields / Keine IEC - PAM-Verbindung
63	**IEC - PAM bağlantısı yapılır /** IEC - PAM assembling available on numbered fields / IEC - PAM-Verbindung möglich
80*	**IEC - PAM bağlantısı yapılacaksa P_{1max} değerleri aşılmamalıdır -** Do not exceed the P_{1max} values indicated on fields with asterix / Bei IEC - PAM-Verbindungen, sollten die P_{1max}-Werte nicht überschritten werden.

Tip Type Typ	i_{ges}	4-pol. 50 Hz 1400 rpm n_2 [min^{-1}]	M_{amax} f_B=1 4 - pol. [Nm]	W P_{1max} - $f_B \geq 1$				IEC - PAM f_B ⇨ 📖 79 - 183							
				4 - pol. 1400rpm [kW]	6 - pol. 930rpm [kW]	8 - pol. 700rpm [kW]	12 - pol. 465rpm [kW]								
PKD H 5290 W mm 📖 194 + IEC - PAM mm 📖 194 - 195	63.96	21.9	460	1.05	0.70	0.53	0.35	63	71	80					
	55.96	25.0	400	1.05	0.70	0.52	0.35	63	71	80					
	52.42	26.7	575	1.61	1.07	0.80	0.53			80	90				
	45.86	30.5	505	1.61	1.07	0.81	0.54			80	90				
	40.77	34.3	450	1.62	1.07	0.81	0.54			80	90				
	36.59	38.3	660	2.64	1.76	1.32	0.88			80	90	100*	112*	132*	
	32.02	43.7	630	2.88	1.92	1.44	0.96			80	90	100*	112*	132*	
	28.46	49.2	600	3.09	2.05	1.55	1.03			80	90	100	112*	132*	
	25.37	55.2	650	3.76	2.49	1.88	1.25					100	112*	132*	
	22.20	63.1	620	4.09	2.72	2.05	1.36					100	112	132*	
	19.73	70.9	600	4.46	2.96	2.23	1.48					100	112	132*	
	17.84	78.5	585	4.81	3.19	2.40	1.60	63	71	80	90	100	112	132*	
	15.61	89.7	585	5.49	3.65	2.75	1.82	63	71	80	90	100	112	132*	
	13.88	100.9	535	5.65	3.75	2.83	1.88			80	90	100	112	132*	
	12.40	112.9	515	6.09	4.04	3.04	2.02			80	90	100	112	132*	
	10.85	129.0	515	6.96	4.62	3.48	2.31			80	90	100	112	132*	
	9.64	145.3	495	7.53	5.00	3.77	2.50					100	112	132	
	8.56	163.5	495	8.47	5.63	4.24	2.81					100	112	132	
	7.59	184.5	475	*9.20*	*6.07*	*4.60*	*3.04*					100	112	132	
	6.42	217.9	450	*9.20*	*6.07*	*4.60*	*3.04*					100	112	132	
	6.11	229.1	420	*9.20*	*6.07*	*4.60*	*3.04*							132	
	5.43	257.7	425	*9.20*	*6.07*	*4.60*	*3.04*							132	
	4.80	291.9	410	*9.20*	*6.07*	*4.60*	*3.04*							132	

	IEC - PAM bağlantısı yoktur / No IEC - PAM assembling on empty fields / Keine IEC - PAM-Verbindung
63	**IEC - PAM bağlantısı yapılır /** IEC - PAM assembling available on numbered fields / IEC - PAM-Verbindung möglich
80*	**IEC - PAM bağlantısı yapılacaksa P_{1max} değerleri aşılmamalıdır -** Do not exceed the P_{1max} values indicated on fields with asterix / Bei IEC - PAM-Verbindungen, sollten die P_{1max}-Werte nicht überschritten werden.

Tip Type Typ	i_{ges}	4-pol. 50 Hz 1400 rpm n_2 [min^{-1}]	M_{amax} f_B=1 4 - pol. [Nm]	W P_{1max} - $f_B \geq 1$ 4 - pol. 1400rpm [kW]	6 - pol. 930rpm [kW]	8 - pol. 700rpm [kW]	12 - pol. 465rpm [kW]	IEC - PAM f_B ⇨ 📖 79 - 183							
PKD 1490 W mm 📖 202 + IEC - PAM mm 📖 202 - 203	1690.91	0.83	400	0.03	0.02	0.02	0.01	63*	71*						
	1412.66	1.00	400	0.04	0.03	0.02	0.01	63*	71*						
	1255.89	1.10	400	0.05	0.03	0.02	0.02	63*	71*						
	848.31	1.70	400	0.07	0.05	0.03	0.02	63*	71*						
	668.11	2.10	400	0.09	0.06	0.04	0.03	63*	71*						
	590.51	2.40	400	0.10	0.07	0.05	0.03	63*	71*						
	440.14	3.20	400	0.13	0.09	0.07	0.04	63*	71*						
	320.68	4.40	400	0.18	0.12	0.09	0.06	63	71*						
	282.43	5.00	400	0.21	0.14	0.10	0.07	63	71*						
	213.26	6.60	400	0.27	0.18	0.14	0.09	63	71*						
	178.17	7.90	400	0.33	0.22	0.16	0.11	63	71*						
	141.69	9.90	400	0.41	0.27	0.21	0.14	63	71						
PKD 1390 W mm 📖 198 + IEC - PAM mm 📖 198 - 199	332.51	4.20	400	0.18	0.11	0.09	0.06	63	71*						
	280.80	5.00	400	0.21	0.14	0.10	0.07	63	71*						
	246.59	5.70	400	0.24	0.16	0.12	0.08	63	71*						
	206.01	6.80	400	0.28	0.19	0.14	0.09	63	71*						
	183.15	7.60	400	0.32	0.21	0.16	0.11		71*	80*					
	166.82	8.40	400	0.35	0.23	0.18	0.12	63	71*						
	140.87	9.90	400	0.42	0.28	0.21	0.14	63	71						
	123.71	11.30	400	0.47	0.31	0.24	0.16	63	71						
	109.98	12.70	400	0.53	0.35	0.27	0.18		71	80*					
	97.43	**14.40**	400	0.60	0.40	0.30	0.20	63	71	80*	90*				
	86.12	**16.30**	400	0.68	0.45	0.34	0.23	63	71	80*	90*				
	76.68	**18.30**	400	0.76	0.51	0.38	0.25	63	71	80	90*	100*	112*		
	62.74	**22.30**	400	0.93	0.62	0.47	0.31	63	71	80	90*	100*	112*		
	55.26	**25.30**	400	1.06	0.70	0.53	0.35	63	71	80	90*	100*	112*		
	48.92	**28.60**	400	1.20	0.80	0.60	0.40	63	71	80	90*	100*	112*		
	41.72	**33.60**	400	1.41	0.93	0.70	0.47	63	71	80	90*	100*	112*		
	34.86	**40.20**	400	1.68	1.12	0.84	0.56	63	71	80	90	100*	112*		
	31.48	**44.50**	400	1.86	1.24	0.93	0.62	63	71	80	90	100*	112*		
	27.72	**50.50**	400	2.12	1.41	1.06	0.70	63	71	80	90	100*	112*		
	24.55	**57.00**	400	2.39	1.59	1.19	0.79	63	71	80	90	100*	112*		
	20.93	**66.90**	400	2.80	1.86	1.40	0.93	63	71	80	90	100*	112*		
	17.49	**80.00**	380	3.19	2.12	1.59	1.06	63	71	80	90	100*	112*		
	15.27	**91.70**	380	3.65	2.42	1.82	1.21	63	71	80	90	100*	112*		
	12.27	**114.10**	220	2.63	1.75	1.31	0.87	63	71	80	90	100*	112*		
	10.86	**128.90**	200	2.70	1.79	1.35	0.90	63	71	80	90	100*	112*		
	9.26	**151.20**	195	3.09	2.05	1.54	1.03	63	71	80	90	100	112*		
	8.09	**173.10**	180	3.26	2.17	1.63	1.08	63	71	80	90	100	112*		

	IEC - PAM bağlantısı yoktur / No IEC - PAM assembling on empty fields / Keine IEC - PAM-Verbindung
63	**IEC - PAM bağlantısı yapılır /** IEC - PAM assembling available on numbered fields / IEC - PAM-Verbindung möglich
80*	**IEC - PAM bağlantısı yapılacaksa P_{1max} değerleri aşılmamalıdır -** Do not exceed the P_{1max} values indicated on fields with asterix / Bei IEC - PAM-Verbindungen, sollten die P_{1max}-Werte nicht überschritten werden.

Tip Type Typ	i_{ges}	4-pol. 50 Hz 1400 rpm n_2 [min^{-1}]	M_{amax} f_B=1 4 - pol. [Nm]	W P_{1max} - $f_B \geq 1$ 4 - pol. 1400rpm [kW]	6 - pol. 930rpm [kW]	8 - pol. 700rpm [kW]	12 - pol. 465rpm [kW]	IEC - PAM f_B ⇨ 📖 79 - 183							
PKD G 1490 W mm 📖 210 + IEC - PAM mm 📖 210 - 211	1412.66	1.00	610	0.06	0.04	0.03	0.02	63*	71*						
	1255.89	1.10	610	0.07	0.05	0.04	0.02	63*	71*						
	630.06	2.20	610	0.14	0.09	0.07	0.05	63*	71*						
	558.17	2.50	610	0.16	0.11	0.08	0.05	63*	71*						
	493.33	2.80	610	0.18	0.12	0.09	0.06	63	71*						
	367.72	3.80	610	0.24	0.16	0.12	0.08	63	71*						
	267.91	5.20	610	0.33	0.22	0.17	0.11	63	71*						
	235.95	5.90	610	*0.37*	*0.24*	*0.19*	*0.12*	63	71						
	178.17	7.90	570	*0.37*	*0.24*	*0.19*	*0.12*	63	71						
	134.41	10.40	430	*0.37*	*0.24*	*0.19*	*0.12*	63	71						
PKD G 1390 W mm 📖 206 + IEC - PAM mm 📖 206 - 207	277.79	5.00	590	0.31	0.21	0.16	0.10	63	71						
	234.59	6.00	590	0.37	0.24	0.18	0.12	63	71						
	206.01	6.80	610	0.43	0.29	0.22	0.14	63	71						
	183.15	7.60	610	0.49	0.32	0.24	0.16		71	80*					
	149.85	9.30	610	0.60	0.40	0.30	0.20		71	80*					
	142.45	9.80	610	0.63	0.42	0.31	0.21		71	80*					
	116.55	12.00	610	0.77	0.51	0.38	0.25		71	80					
	91.88	15.20	500	0.80	0.53	0.40	0.26		71	80					
	81.40	**17.20**	600	1.08	0.72	0.54	0.36	63	71	80	90*				
	71.94	**19.50**	600	1.22	0.81	0.61	0.41	63	71	80	90*				
	64.06	**21.90**	610	1.40	0.93	0.70	0.46	63	71	80	90*	100*	112		
	52.42	**26.70**	610	1.71	1.13	0.85	0.57	63	71	80	90	100*	112*		
	46.16	**30.30**	610	1.94	1.29	0.97	0.64	63	71	80	90	100*	112*		
	40.87	**34.30**	600	2.15	1.43	1.08	0.71	63	71	80	90	100*	112*		
	34.86	**40.20**	600	2.52	1.68	1.26	0.84	63	71	80	90	100*	112*		
	30.44	**46.00**	600	2.89	1.92	1.44	0.96	63	71	80	90	100*	112*		
	26.30	**53.20**	600	3.34	2.22	1.67	1.11	63	71	80	90	100	112*		
	23.16	**60.40**	520	3.29	2.19	1.65	1.09	63	71	80	90	100	112*		
	20.51	**68.30**	580	4.00	2.64	2.00	1.32	63	71	80	90	100	112		
	17.49	**80.00**	540	4.00	2.64	2.00	1.32	63	71	80	90	100	112		
	15.27	**91.70**	520	4.00	2.64	2.00	1.32	63	71	80	90	100	112		
	12.49	**112.10**	520	4.00	2.64	2.00	1.32	63	71	80	90	100	112		

	IEC - PAM bağlantısı yoktur / No IEC - PAM assembling on empty fields / Keine IEC - PAM-Verbindung
63	**IEC - PAM bağlantısı yapılır /** IEC - PAM assembling available on numbered fields / IEC - PAM-Verbindung möglich
80*	**IEC - PAM bağlantısı yapılacaksa P_{1max} değerleri aşılmamalıdır -** Do not exceed the P_{1max} values indicated on fields with asterix / Bei IEC - PAM-Verbindungen, sollten die P_{1max}-Werte nicht überschritten werden.

Tip Type Typ	i_{ges}	4-pol. 50 Hz 1400 rpm n_2 [min^{-1}]	M_{amax} f_B=1 4 - pol. [Nm]	W P_{1max} - $f_B \geq 1$ 4 - pol. 1400rpm [kW]	6 - pol. 930rpm [kW]	8 - pol. 700rpm [kW]	12 - pol. 465rpm [kW]	IEC - PAM f_B ⇨ 79 - 183							
PKD 2490	1898.52	0.74	860	0.07	0.04	0.03	0.02	63*	71*						
	1504.07	0.93	860	0.08	0.06	0.04	0.03	63*	71*						
	1121.09	1.20	860	0.11	0.07	0.06	0.04	63*	71*						
W	952.47	1.50	860	0.13	0.09	0.07	0.04	63*	71*						
mm	754.58	1.90	860	0.17	0.11	0.08	0.06	63*	71*						
218	678.31	2.10	860	0.19	0.12	0.09	0.06	63	71*						
+	562.44	2.50	860	0.22	0.15	0.11	0.07	63	71*						
IEC - PAM	473.11	3.00	860	0.27	0.18	0.13	0.09	63	71*						
mm	339.72	4.10	860	0.37	0.24	0.19	0.12	63	71						
218 - 219	297.67	4.70	860	*0.37*	*0.24*	*0.19*	*0.12*	63	71						
	228.98	6.10	650	*0.37*	*0.24*	*0.19*	*0.12*	63	71						
PKD 2390	276.87	5.10	800	0.42	0.28	0.21	0.14	63	71						
	232.89	6.00	700	0.44	0.29	0.22	0.15	63	71						
	219.34	6.40	860	0.57	0.38	0.29	0.19		71	80*					
W	184.51	7.60	860	0.68	0.45	0.34	0.23		71	80*					
mm	169.88	8.20	860	0.74	0.49	0.37	0.25		71	80*					
214	137.63	10.20	860	0.92	0.61	0.46	0.30			80					
+	115.77	12.10	860	1.09	0.72	0.54	0.36			80					
IEC - PAM	**98.92**	**14.20**	860	1.27	0.85	0.64	0.42	63	71	80	90*				
mm	85.23	16.40	860	1.48	0.98	0.74	0.49		71	80					
214 - 215	**78.85**	**17.80**	860	1.60	1.06	0.80	0.53	63	71	80	90	100*	112*		
	66.47	**21.10**	860	1.90	1.26	0.95	0.63	63	71	80	90	100*	112*		
	58.24	**24.00**	860	2.16	1.44	1.08	0.72	63	71	80	90	100*	112*		
	52.11	**26.90**	860	2.42	1.61	1.21	0.80	63	71	80	90	100*	112*		
	48.99	**28.60**	860	2.57	1.71	1.29	0.85	63	71	80	90	100*	112*		
	44.80	**31.20**	860	2.81	1.87	1.41	0.93	63	71	80	90	100*	112*		
	39.70	**35.30**	860	3.18	2.11	1.59	1.05	63	71	80	90	100*	112*		
	33.28	**42.10**	860	3.79	2.52	1.89	1.26	63	71	80	90	100*	112*		
	31.43	**44.50**	820	3.82	2.54	1.91	1.27				90	100	112*		
	29.22	**47.90**	860	*4.00*	*2.64*	*2.00*	*1.32*	63	71	80	90	100	112*		
	26.14	**53.60**	860	*4.00*	*2.64*	*2.00*	*1.32*	63	71	80	90	100	112*		
	24.58	**57.00**	860	*4.00*	*2.64*	*2.00*	*1.32*	63	71	80	90	100	112		
	22.48	**62.30**	780	*4.00*	*2.64*	*2.00*	*1.32*	63	71	80	90	100	112		
	19.92	**70.30**	760	*4.00*	*2.64*	*2.00*	*1.32*	63	71	80	90	100	112		
	17.52	**79.90**	720	*4.00*	*2.64*	*2.00*	*1.32*				90	100	112		
	16.29	**85.90**	620	*4.00*	*2.64*	*2.00*	*1.32*	63	71	80	90	100	112		
	14.58	**96.00**	580	*4.00*	*2.64*	*2.00*	*1.32*	63	71	80	90	100	112		
	12.53	**111.70**	540	*4.00*	*2.64*	*2.00*	*1.32*	63	71	80	90	100	112		
	11.11	**126.00**	520	*4.00*	*2.64*	*2.00*	*1.32*	63	71	80	90	100	112		
	8.79	**159.30**	480	*4.00*	*2.64*	*2.00*	*1.32*				90	100	112		

	IEC - PAM bağlantısı yoktur / No IEC - PAM assembling on empty fields / Keine IEC - PAM-Verbindung
63	**IEC - PAM bağlantısı yapılır /** IEC - PAM assembling available on numbered fields / IEC - PAM-Verbindung möglich
80*	**IEC - PAM bağlantısı yapılacaksa P_{1max} değerleri aşılmamalıdır -** Do not exceed the P_{1max} values indicated on fields with asterix / Bei IEC - PAM-Verbindungen, sollten die P_{1max}-Werte nicht überschritten werden.

Tip Type Typ	i_{ges}	4-pol. 50 Hz 1400 rpm n_2 [min^{-1}]	M_{amax} f_B=1 4 - pol. [Nm]	W P_{1max} - $f_B \geq 1$ 4 - pol. 1400rpm [kW]	6 - pol. 930rpm [kW]	8 - pol. 700rpm [kW]	12 - pol. 465rpm [kW]	IEC - PAM f_B ⇨ 79 - 183							
PKD 3490	3637.83	0.38	1550	0.06	0.04	0.03	0.02	63*	71*						
	2429.08	0.58	1550	0.09	0.06	0.05	0.03	63*	71*						
	1825.06	0.77	1550	0.12	0.08	0.06	0.04	63*	71*						
W	1363.01	1.00	1550	0.17	0.11	0.08	0.06	63*	71*						
mm	1151.03	1.20	1550	0.20	0.13	0.10	0.07	63	71*						
226	873.20	1.60	1550	0.26	0.17	0.13	0.09	63	71*						
+	691.75	2.00	1550	0.33	0.22	0.16	0.11	63	71*						
IEC - PAM	538.92	2.60	1550	0.42	0.28	0.21	0.14	63	71						
mm	**399.39**	**3.50**	1550	0.57	0.38	0.28	0.19	63	71	80*	90*				
226 - 227	**353.00**	**4.00**	1550	0.64	0.43	0.32	0.21	63	71	80*	90*				
	267.79	**5.20**	1550	0.85	0.56	0.42	0.28	63	71	80	90*				
	215.12	**6.50**	1550	1.06	0.70	0.53	0.35	63	71	80	90*				
	167.59	**8.40**	1550	*1.10*	*0.73*	*0.55*	*0.37*	63	71	80	90				
PKD 3390	296.10	4.70	1550	0.77	0.51	0.38	0.25	71	80	90*					
	250.01	5.60	1550	0.91	0.60	0.45	0.30	71	80	90*					
	234.13	6.00	1550	0.97	0.64	0.49	0.32		80	90*					
W	197.69	7.10	1550	1.15	0.76	0.57	0.38		80	90*					
mm	188.22	7.40	1550	1.21	0.80	0.60	0.40			90*	100*	112*			
222	158.92	8.80	1550	1.43	0.95	0.71	0.47			90*	100*	112*			
+	139.49	10.00	1550	1.63	1.08	0.81	0.54			90					
IEC - PAM	117.78	11.90	1550	1.93	1.28	0.96	0.64			90					
mm	**110.94**	**12.60**	1550	2.05	1.36	1.02	0.68	71	80	90	100*	112*			
222 - 223	**93.67**	**14.90**	1550	2.43	1.61	1.21	0.81	71	80	90	100*	112*			
	84.16	**16.60**	1550	2.70	1.79	1.35	0.90	71	80	90	100*	112*			
	75.92	**18.40**	1550	2.99	1.99	1.50	0.99	71	80	90	100*	112*			
	64.11	**21.80**	1550	3.54	2.35	1.77	1.18	71	80	90	100	112*			
	59.15	**23.70**	1550	3.84	2.55	1.92	1.28	71	80	90	100	112*	132*		
	49.94	**28.00**	1550	4.55	3.02	2.27	1.51	71	80	90	100	112	132*		
	47.67	**29.40**	1550	4.77	3.17	2.38	1.58			90	100	112	132*		
	40.37	**34.70**	1550	5.63	3.74	2.81	1.87			90	100	112	132*		
	38.09	**36.80**	1550	5.97	3.96	2.98	1.98	71	80	90	100	112			
	35.65	**39.30**	1550	6.37	4.23	3.19	2.12	71	80	90	100	112			
	29.67	**47.20**	1500	7.41	4.92	3.71	2.46	71	80	90	100	112	132*		
	25.06	**55.90**	1500	8.77	5.83	4.39	2.91	71	80	90	100	112	132*		
	23.92	**58.50**	1550	*9.20*	*6.07*	*4.60*	*3.04*			90	100	112	132		
	20.25	**69.10**	1500	*9.20*	*6.07*	*4.60*	*3.04*			90	100	112	132		
	17.10	**81.90**	1450	*9.20*	*6.07*	*4.60*	*3.04*			90	100	112	132		
	15.73	**89.00**	1400	*9.20*	*6.07*	*4.60*	*3.04*			90	100	112	132		
	13.54	**103.40**	1350	*9.20*	*6.07*	*4.60*	*3.04*			90	100	112	132		
	12.68	**110.40**	1000	*9.20*	*6.07*	*4.60*	*3.04*			90	100	112	132		
	10.74	**130.40**	900	*9.20*	*6.07*	*4.60*	*3.04*			90	100	112	132		
	8.50	**164.70**	880	*9.20*	*6.07*	*4.60*	*3.04*			90	100	112	132		

	IEC - PAM bağlantısı yoktur / No IEC - PAM assembling on empty fields / Keine IEC - PAM-Verbindung
63	**IEC - PAM bağlantısı yapılır /** IEC - PAM assembling available on numbered fields / IEC - PAM-Verbindung möglich
80*	**IEC - PAM bağlantısı yapılacaksa P_{1max} değerleri aşılmamalıdır -** Do not exceed the P_{1max} values indicated on fields with asterix / Bei IEC - PAM-Verbindungen, sollten die P_{1max}-Werte nicht überschritten werden.

Tip Type Typ	i_{ges}	4-pol. 50 Hz 1400 rpm n_2 [min^{-1}]	M_{amax} f_B=1 4 - pol. [Nm]	W P_{1max} - $f_B \geq 1$ 4 - pol. 1400rpm [kW]	6 - pol. 930rpm [kW]	8 - pol. 700rpm [kW]	12 - pol. 465rpm [kW]	IEC - PAM f_B ⇨ 79 - 183							
PKD 4490	4243.27	0.33	2800	0.10	0.06	0.05	0.03	71*	80*						
	3361.66	0.42	2800	0.12	0.08	0.06	0.04	71*	80*	90*					
	3023.46	0.46	2800	0.14	0.09	0.07	0.05	71*	80*						
W	2395.28	0.58	2800	0.17	0.11	0.09	0.06	71*	80*	90*					
mm	2128.80	0.66	2800	0.19	0.13	0.10	0.06	71*	80*						
234	1516.84	0.92	2800	0.27	0.18	0.14	0.09	71*	80*						
+	1113.75	1.30	2800	0.37	0.24	0.18	0.12	71	80*						
IEC - PAM	882.35	1.60	2800	0.47	0.31	0.23	0.15	71	80*	90*					
mm	644.73	2.20	2800	0.64	0.42	0.32	0.21	71	80*	90*					
234 - 235	567.85	2.50	2800	0.72	0.48	0.36	0.24	71	80*	90*					
	404.53	3.50	2800	1.01	0.67	0.51	0.34			90*	100*	112*			
	350.42	**4.00**	2800	1.17	0.78	0.59	0.39	71	80	90*	100*	112*			
	278.98	**5.00**	2800	1.47	0.98	0.74	0.49	71	80	90*	100*	112*			
	204.13	**6.90**	2800	2.01	1.34	1.01	0.67	71	80	90	100*	112*			
	172.07	**8.10**	2800	*2.20*	*1.45*	*1.10*	*0.73*	71	80	90	100*	112*			
PKD 4390	329.57	4.20	2800	1.25	0.83	0.62	0.41	90*							
	273.80	5.10	2800	1.50	1.00	0.75	0.50	90							
	234.83	6.00	2800	1.75	1.16	0.87	0.58	90	100*	112*					
W	195.09	7.20	2800	2.10	1.40	1.05	0.70	90	100*	112*					
mm	165.34	8.50	1500	1.33	0.88	0.66	0.44	90							
230	159.93	8.80	2800	2.57	1.70	1.28	0.85		100*	112*	132*				
+	132.86	10.50	2800	3.09	2.05	1.54	1.03		100	112*	132*				
IEC - PAM	117.81	11.90	2400	2.99	1.98	1.49	0.99	90	100	112*					
mm	**95.57**	**14.60**	2800	4.29	2.85	2.15	1.43	90	100	112	132*				
230 - 231	**86.50**	**16.20**	2800	4.75	3.15	2.37	1.58	90	100	112	132*				
	76.08	**18.40**	2800	5.40	3.58	2.70	1.79	90	100	112	132*				
	68.52	**20.40**	2800	5.99	3.98	3.00	1.99	90	100	112	132	160*			
	63.21	**22.10**	2800	6.49	4.31	3.25	2.16	90	100	112	132*				
	55.67	**25.10**	2800	7.37	4.90	3.69	2.45	90	100	112	132	160*			
	47.61	**29.40**	2800	8.62	5.73	4.31	2.86	90	100	112	132	160*			
	40.56	**34.50**	2800	10.12	6.72	5.06	3.36	90	100	112	132	160*			
	34.38	**40.70**	2800	11.94	7.93	5.97	3.97	90	100	112	132	160*			
	27.93	**50.10**	2800	14.70	9.76	7.35	4.88	90	100	112	132	160*			
	23.88	**58.60**	2700	*15.00*	*9.90*	*7.50*	*4.95*	90	100	112	132	160			
	20.35	**68.80**	2600	*15.00*	*9.90*	*7.50*	*4.95*	90	100	112	132	160			
	18.25	**76.70**	2450	*15.00*	*9.90*	*7.50*	*4.95*				132	160			
	15.69	**89.20**	2000	*15.00*	*9.90*	*7.50*	*4.95*	90	100	112	132	160			
	13.42	**104.30**	2000	*15.00*	*9.90*	*7.50*	*4.95*	90	100	112	132	160			
	11.43	**122.50**	1500	*15.00*	*9.90*	*7.50*	*4.95*	90	100	112	132	160			
	10.25	**136.60**	1500	*15.00*	*9.90*	*7.50*	*4.95*				132	160			
	9.42	**148.60**	1500	*15.00*	*9.90*	*7.50*	*4.95*				132	160			
	8.83	**158.60**	1400	*15.00*	*9.90*	*7.50*	*4.95*				132	160			

	IEC - PAM bağlantısı yoktur / No IEC - PAM assembling on empty fields / Keine IEC - PAM-Verbindung
63	**IEC - PAM bağlantısı yapılır /** IEC - PAM assembling available on numbered fields / IEC - PAM-Verbindung möglich
80*	**IEC - PAM bağlantısı yapılacaksa P_{1max} değerleri aşılmamalıdır -** Do not exceed the P_{1max} values indicated on fields with asterix / Bei IEC - PAM-Verbindungen, sollten die P_{1max}-Werte nicht überschritten werden.

Tip Type Typ	i_{ges}	4-pol. 50 Hz 1400 rpm n_2 [min^{-1}]	M_{amax} f_B=1 4 - pol. [Nm]	W P_{1max} - $f_B \geq 1$ 4 - pol. 1400rpm [kW]	6 - pol. 930rpm [kW]	8 - pol. 700rpm [kW]	12 - pol. 465rpm [kW]	IEC - PAM f_B ⇨ 79 - 183							
PKD 5490 W mm 242 + IEC - PAM mm 242 - 243	3736.07	0.37	4800	0.19	0.13	0.09	0.06		71*	80*	90*				
	2954.10	0.47	4800	0.24	0.16	0.12	0.08			80*	90*				
	2023.36	0.69	4800	0.35	0.23	0.17	0.12			80*	90*				
	1874.35	0.75	4800	0.38	0.25	0.19	0.12		71	80*	90*				
	1399.82	**1.00**	4800	0.50	0.33	0.25	0.17		71	80*	90*	100*	112*		
	1061.93	**1.30**	4800	0.66	0.44	0.33	0.22		71	80*	90*	100*	112*		
	931.06	1.50	4800	0.76	0.50	0.38	0.25		71	80	90*				
	703.71	2.00	4000	0.83	0.55	0.42	0.28		71	80	90*				
	580.56	2.40	4800	1.21	0.81	0.61	0.40		71	80	90*				
	459.05	3.00	4800	1.53	1.02	0.77	0.51			80	90				
	348.85	**4.00**	4800	2.02	1.34	1.01	0.67		71	80	90	100*	112*		
	264.64	**5.30**	4800	2.66	1.77	1.33	0.88		71	80	90	100*	112*		
	228.99	**6.10**	4800	3.07	2.04	1.54	1.02		71	80	90	100	112*		
	165.02	**8.50**	4800	*4.00*	*2.64*	*2.00*	*1.32*		71	80	90	100	112		
PKD 5390 W mm 238 + IEC - PAM mm 238 - 239	289.62	4.80	4800	2.43	1.64	1.21	0.82		90	100*	112*				
	247.36	5.70	4800	2.84	1.89	1.42	0.94		90	100*	112*				
	198.37	7.10	4800	3.55	2.36	1.77	1.18			100	112*	132*			
	169.43	8.30	4800	4.15	2.76	2.08	1.38			100	112	132*			
	145.30	9.60	3600	3.63	2.41	1.82	1.21		90	100	112*				
	120.01	**11.70**	4800	5.86	3.89	2.93	1.95		90	100	112	132			
	102.50	**13.70**	4800	6.87	4.56	3.43	2.28		90	100	112	132			
	88.12	**15.90**	4800	7.99	5.30	3.99	2.65		90	100	112	132*	160*		
	72.18	**19.40**	4800	9.75	6.48	4.87	3.24		90	100	112	132	160*		
	62.45	**22.40**	4800	11.27	7.48	5.63	3.74		90	100	112	132	160*		
	54.55	**25.70**	4800	12.90	8.57	6.45	4.28		90	100	112	132	160*	180*	
	45.00	**31.10**	4800	15.64	10.39	7.82	5.19			100	112	132	160	180*	
	39.74	**35.20**	4800	17.71	11.76	8.85	5.88		90	100	112	132	160	180*	
	36.21	**38.70**	4800	19.43	12.91	9.72	6.45		90	100	112	132	160		
	31.33	**44.70**	4800	*22.00*	*14.52*	*11.00*	*7.26*		90	100	112	132	160		
	27.37	**51.20**	4600	*22.00*	*14.52*	*11.00*	*7.26*		90	100	112	132	160	180	
	23.38	**59.90**	4300	*22.00*	*14.52*	*11.00*	*7.26*			100	112	132	160	180	
	22.58	**62.00**	4300	*22.00*	*14.52*	*11.00*	*7.26*			100	112	132	160	180	
	19.94	**70.20**	4300	*22.00*	*14.52*	*11.00*	*7.26*					132	160	180	
	17.95	**78.00**	4300	*22.00*	*14.52*	*11.00*	*7.26*		90	100	112	132	160	180	
	16.37	**85.50**	4300	*22.00*	*14.52*	*11.00*	*7.26*			100	112	132	160	180	
	13.50	**103.50**	4300	*22.00*	*14.52*	*11.00*	*7.26*			100	112	132	160	180	
	11.92	**117.40**	3900	*22.00*	*14.52*	*11.00*	*7.26*						160	180	
	10.74	**130.40**	2900	*22.00*	*14.52*	*11.00*	*7.26*						160	180	
	10.07	**139.00**	2800	*22.00*	*14.52*	*11.00*	*7.26*						160	180	
	9.46	**148.00**	2600	*22.00*	*14.52*	*11.00*	*7.26*						160	180	
	8.13	**172.20**	2600	*22.00*	*14.52*	*11.00*	*7.26*						160	180	

	IEC - PAM bağlantısı yoktur / No IEC - PAM assembling on empty fields / Keine IEC - PAM-Verbindung
63	**IEC - PAM bağlantısı yapılır /** IEC - PAM assembling available on numbered fields / IEC - PAM-Verbindung möglich
80*	**IEC - PAM bağlantısı yapılacaksa P_{1max} değerleri aşılmamalıdır -** Do not exceed the P_{1max} values indicated on fields with asterix / Bei IEC - PAM-Verbindungen, sollten die P_{1max}-Werte nicht überschritten werden.

Tip Type Typ	i_{ges}	4-pol. 50 Hz 1400 rpm n_2 [min^{-1}]	M_{amax} f_B=1 4 - pol. [Nm]	W P_{1max} - $f_B \geq 1$ 4 - pol. 1400rpm [kW]	6 - pol. 930rpm [kW]	8 - pol. 700rpm [kW]	12 - pol. 465rpm [kW]	IEC - PAM f_B ⇨ 📖 79 - 183							
PKD 6390/32 W mm 📖 269 + IEC - PAM mm 📖 268 - 269	4318.33	0.32	8200	0.28	0.18	0.14	0.09		80*	90*					
	3863.44	0.36	8200	0.31	0.21	0.16	0.10		80*	90*					
	3110.88	0.45	8200	0.39	0.26	0.19	0.13		80*	90*					
	2217.63	0.63	8200	0.54	0.36	0.27	0.18		80*	90*					
	1830.71	**0.76**	8200	0.66	0.44	0.33	0.22	71	80*	90*	100*	112*			
	1388.82	**1.00**	8200	0.87	0.57	0.43	0.29	71	80	90*	100*	112*			
	1118.29	**1.10**	8200	0.92	0.71	0.46	0.36	71	80	90*	100*	112*			
	932.46	**1.50**	8200	1.29	0.86	0.64	0.43	71	80	90*	100*	112*			
	733.69	**1.90**	8200	1.64	1.09	0.82	0.54	71	80	90	100*	112*			
	571.60	**2.40**	8200	2.10	1.40	1.05	0.70	71	80	90	100*	112*	132*		
	451.55	**3.10**	8200	2.66	1.77	1.33	0.88			90	100*	112*	132*		
	368.93	**3.80**	8200	3.26	2.16	1.63	1.08	71	80	90	100	112*	132*		
	297.35	**4.70**	8200	*4.00*	*2.64*	*2.00*	*1.32*			90	100	112	132*		
PKD 6390/42 W mm 📖 269 + IEC - PAM mm 📖 268 - 269	**258.36**	**5.40**	8200	4.65	3.09	2.33	1.55	90	100	112	132*	160*			
	188.23	**7.40**	7200	5.61	3.72	2.80	1.86	90	100	112	132*	160*			
	150.60	**9.30**	6200	6.04	4.01	3.02	2.00	90	100	112	132*	160*			
	128.79	**10.90**	6000	6.83	4.54	3.41	2.27	90	100	112	132*	160*			
PKD 6390 W mm 📖 246 + IEC - PAM mm 📖 246 - 247	235.45	5.90	8200	5.11	3.39	2.55	1.70	100	112	132*					
	198.23	7.10	8200	6.06	4.03	3.03	2.01	100	112	132*					
	179.11	7.80	8200	6.71	4.46	3.36	2.23			132*	160*	180*			
	150.79	9.30	8200	7.97	5.30	3.99	2.65			132*	160*	180*			
	129.36	10.80	6600	7.48	4.97	3.74	2.48	100	112	132					
	105.58	**13.30**	8200	11.39	7.56	5.69	3.78	100	112	132					
	87.70	**16.00**	8200	13.71	9.11	6.85	4.55	100	112	132	160*	180*			
	76.33	**18.30**	8200	15.75	10.46	7.87	5.23	100	112	132	160	180*			
	67.20	**20.80**	8200	17.89	11.88	8.94	5.94	100	112	132	160	180*	200*	225*	
	56.03	**25.00**	8200	21.45	14.25	10.73	7.13	100	112	132	160	180*	200*	225*	
	48.23	**29.00**	7900	24.01	15.95	12.01	7.98	100	112	132	160	180	200*	225*	
	42.97	**32.60**	7400	25.25	16.77	12.62	8.39					180	200*	225*	
	39.35	**35.60**	7400	27.57	18.31	13.78	9.16			132	160	180	200*	225*	
	33.71	**41.50**	8200	35.66	23.69	17.83	11.84	100	112	132	160	180	200	225*	
	28.11	**49.80**	8200	42.76	28.41	21.38	14.20	100	112	132	160	180	200	225*	
	24.19	**57.90**	8200	*45.00*	*29.70*	*22.50*	*14.85*	100	112	132	160	180	200	225	
	21.56	**64.90**	8200	*45.00*	*29.70*	*22.50*	*14.85*					180	200	225	
	19.74	**70.90**	8200	*45.00*	*29.70*	*22.50*	*14.85*			132	160	180	200	225	
	17.62	**79.50**	7500	*45.00*	*29.70*	*22.50*	*14.85*			132	160	180	200	225	
	15.76	**88.80**	7200	*45.00*	*29.70*	*22.50*	*14.85*					180	200	225	
	14.83	**94.40**	7200	*45.00*	*29.70*	*22.50*	*14.85*			132	160	180	200	225	
	13.29	**105.30**	5000	*45.00*	*29.70*	*22.50*	*14.85*	100	112	132	160	180	200	225	
	11.84	**118.20**	4800	*45.00*	*29.70*	*22.50*	*14.85*					180	200	225	
	11.42	**122.60**	4800	*45.00*	*29.70*	*22.50*	*14.85*			132	160	180	200	225	
	10.85	**129.00**	4800	*45.00*	*29.70*	*22.50*	*14.85*			132	160	180	200	225	
	9.68	**144.60**	4500	*45.00*	*29.70*	*22.50*	*14.85*			132	160	180	200	225	
	8.66	**161.70**	4500	*45.00*	*29.70*	*22.50*	*14.85*					180	200	225	

	IEC - PAM bağlantısı yoktur / No IEC - PAM assembling on empty fields / Keine IEC - PAM-Verbindung
63	**IEC - PAM bağlantısı yapılır /** IEC - PAM assembling available on numbered fields / IEC - PAM-Verbindung möglich
80*	**IEC - PAM bağlantısı yapılacaksa P_{1max} değerleri aşılmamalıdır -** Do not exceed the P_{1max} values indicated on fields with asterix / Bei IEC - PAM-Verbindungen, sollten die P_{1max}-Werte nicht überschritten werden.

Tip Type Typ	i_{ges}	4-pol. 50 Hz 1400 rpm n_2 [min^{-1}]	M_{amax} f_B=1 4 - pol. [Nm]	W P_{1max} - $f_B \geq 1$ 4 - pol. 1400rpm [kW]	6 - pol. 930rpm [kW]	8 - pol. 700rpm [kW]	12 - pol. 465rpm [kW]	IEC - PAM f_B ⇨ 📖 79 - 183							
PKD 7390/32 W mm 📖 269 + IEC - PAM mm 📖 268 - 269	4503.40	**0.31**	8500	0.28	0.18	0.14	0.09		80*	90*					
	4029.01	**0.35**	8500	0.31	0.21	0.15	0.10		80*	90*					
	3244.21	**0.43**	8500	0.38	0.26	0.19	0.13		80*	90*					
	2312.67	**0.61**	8500	0.54	0.36	0.27	0.18		80*	90*					
	1909.17	**0.73**	8500	0.65	0.43	0.33	0.22	71	80*	90*	100*	112*			
	1448.34	**0.97**	8500	0.86	0.57	0.43	0.29	71	80	90*	100*	112*			
	1166.22	**1.20**	8500	1.07	0.71	0.53	0.35	71	80	90*	100*	112*			
	972.42	**1.40**	8500	1.28	0.85	0.64	0.43	71	80	90*	100*	112*			
	765.14	**1.80**	8500	1.63	1.08	0.81	0.54	71	80	90	100*	112*	132*		
	596.10	**2.30**	8500	2.09	1.39	1.05	0.69	71	80	90	100*	112*	132*		
	470.91	**3.00**	8500	2.65	1.76	1.32	0.88			90	100*	112*	132*		
	384.74	**3.60**	8500	3.24	2.15	1.62	1.08	71	80	90	100	112*	132*		
	310.09	**4.50**	8500	*4.00*	*2.64*	*2.00*	*1.32*			90	100	112	132*		
PKD 7390/42 W mm 📖 269 + IEC - PAM mm 📖 268 - 269	**269.43**	**5.20**	8500	4.62	3.07	2.31	1.54	90	100	112	132*	160*			
	196.30	**7.10**	7400	5.53	3.67	2.76	1.84	90	100	112	132*	160*			
	157.05	**8.90**	6400	5.97	3.97	2.99	1.98	90	100	112	132*	160*			
	134.31	**10.40**	6200	6.77	4.49	3.38	2.25	90	100	112	132*	160*			
PKD 7390 W mm 📖 250 + IEC - PAM mm 📖 250 - 251	245.55	5.70	8500	5.07	3.37	2.54	1.69	100	112	132*					
	206.98	6.80	8500	6.02	4.00	3.01	2.00	100	112	132*					
	186.78	7.50	8500	6.67	4.43	3.34	2.22			132*	160*	180*			
	157.44	8.90	8500	7.91	5.26	3.96	2.63			132*	160*	180*			
	136.65	10.20	6700	7.19	4.77	3.59	2.39	100	112	132*					
	110.10	**12.70**	8500	11.32	7.52	5.66	3.76	100	112	132	160*				
	91.45	**15.30**	8500	13.63	9.05	6.81	4.53	100	112	132	160*	180*			
	79.61	**17.60**	8500	15.65	10.40	7.83	5.20	100	112	132	160	180*			
	70.08	**20.00**	8500	17.78	11.81	8.89	5.91	100	112	132	160	180*	200*	225*	
	58.44	**24.00**	8500	21.32	14.16	10.66	7.08	100	112	132	160	180*	200*	225*	
	50.29	**27.80**	8200	23.90	15.88	11.95	7.94	100	112	132	160	180	200*	225*	
	44.81	**31.20**	7700	25.19	16.73	12.60	8.37					180	200*	225*	
	41.04	**34.10**	7700	27.50	18.27	13.75	9.14			132	160	180	200*	225*	
	35.16	**39.80**	8500	35.44	23.54	17.72	11.77	100	112	132	160	180	200	225*	
	29.32	**47.70**	8500	42.50	28.23	21.25	14.12	100	112	132	160	180	200	225*	
	25.23	**55.50**	8500	*45.00*	*29.70*	*22.50*	*14.85*	100	112	132	160	180	200	225	
	22.48	**62.30**	8500	*45.00*	*29.70*	*22.50*	*14.85*					180	200	225	
	20.59	**68.00**	8500	*45.00*	*29.70*	*22.50*	*14.85*			132	160	180	200	225	
	18.37	**76.20**	7800	*45.00*	*29.70*	*22.50*	*14.85*			132	160	180	200	225	
	16.44	**85.20**	7500	*45.00*	*29.70*	*22.50*	*14.85*					180	200	225	
	15.49	**90.40**	7500	*45.00*	*29.70*	*22.50*	*14.85*			132	160	180	200	225	
	14.04	**99.70**	5200	*45.00*	*29.70*	*22.50*	*14.85*	100	112	132	160	180	200	225	
	12.51	**111.90**	5000	*45.00*	*29.70*	*22.50*	*14.85*					180	200	225	
	12.06	**116.10**	5000	*45.00*	*29.70*	*22.50*	*14.85*			132	160	180	200	225	
	11.46	**122.20**	5000	*45.00*	*29.70*	*22.50*	*14.85*			132	160	180	200	225	
	10.22	**137.00**	4700	*45.00*	*29.70*	*22.50*	*14.85*			132	160	180	200	225	
	9.15	**153.00**	4700	*45.00*	*29.70*	*22.50*	*14.85*					180	200	225	

	IEC - PAM bağlantısı yoktur / No IEC - PAM assembling on empty fields / Keine IEC - PAM-Verbindung
63	**IEC - PAM bağlantısı yapılır /** IEC - PAM assembling available on numbered fields / IEC - PAM-Verbindung möglich
80*	**IEC - PAM bağlantısı yapılacaksa P_{1max} değerleri aşılmamalıdır -** Do not exceed the P_{1max} values indicated on fields with asterix / Bei IEC - PAM-Verbindungen, sollten die P_{1max}-Werte nicht überschritten werden.

Tip Type Typ	i_{ges}	4-pol. 50 Hz 1400 rpm n_2 [min^{-1}]	M_{amax} f_B=1 4 - pol. [Nm]	W P_{1max} - $f_B \geq 1$ 4 - pol. 1400rpm [kW]	6 - pol. 930rpm [kW]	8 - pol. 700rpm [kW]	12 - pol. 465rpm [kW]	IEC - PAM f_B ⇨ 📖 79 - 183							
PKD 8390/32 W mm 📖 271 + IEC - PAM mm 📖 270 - 271	4674.44	0.30	13000	0.41	0.27	0.20	0.14	90*	100*	112*					
	3348.70	0.42	13000	0.57	0.38	0.28	0.19	90*	100*	112*					
	2688.01	0.52	13000	0.71	0.47	0.35	0.24	90*	100*	112*					
	2046.84	**0.68**	13000	0.93	0.62	0.47	0.31	90*	100*	112*					
	1812.03	**0.77**	13000	1.05	0.70	0.53	0.35	90*	100*	112*	132*	160*			
	1467.49	**0.95**	13000	1.30	0.86	0.65	0.43	90*	100*	112*	132*	160*			
	1017.96	**1.40**	13000	1.87	1.24	0.94	0.62	90	100*	112*	132*	160*			
	845.40	**1.70**	13000	2.25	1.50	1.13	0.75	90	100*	112*	132*	160*			
	705.03	**2.00**	13000	2.70	1.80	1.35	0.90	90	100*	112*	132*	160*			
	602.92	**2.30**	13000	3.16	2.10	1.58	1.05	90	100	112*	132*	160*			
	444.35	**3.20**	13000	4.29	2.85	2.14	1.42	90	100	112	132*	160*			
	379.99	**3.70**	13000	5.01	3.33	2.51	1.67	90	100	112	132*	160*			
	286.02	**4.90**	13000	6.66	4.43	3.33	2.21	90	100	112	132*	160*			
PKD 8390/52 W mm 📖 271 + IEC - PAM mm 📖 270 - 271	**246.45**	**5.70**	13000	7.73	5.14	3.87	2.57	100	112	132*	160*	180*			
	182.32	**7.70**	13000	10.45	6.94	5.23	3.47	100	112	132	160*	180*			
	146.35	**9.60**	13000	13.02	8.65	6.51	4.33	100	112	132	160*	180*			
	123.64	**11.30**	12000	14.23	9.45	7.11	4.73	100	112	132	160*	180*			
PKD 8390 W mm 📖 254 + IEC - PAM mm 📖 254 - 255	296.68	4.70	12600	6.23	4.14	3.11	2.07	132*	160*	180*					
	244.25	5.70	13000	7.80	5.18	3.90	2.59	132*	160*	180*					
	148.84	9.40	13000	12.80	8.51	6.40	4.25	132	160*	180*					
	122.54	11.40	13000	15.55	10.33	7.78	5.17	132	160*	180*					
	116.55	12.00	13000	16.35	10.86	8.18	5.43	132	160	180*	200*	225*			
	95.96	14.60	13000	19.86	13.19	9.93	6.60	132	160	180*	200*	225*			
	82.95	16.90	13000	22.97	15.26	11.49	7.63	132	160	180	200*	225*	250*		
	71.56	19.60	13000	26.63	17.69	13.32	8.85	132	160	180	200*	225*	250*	280*	
	62.43	22.40	13000	30.53	20.28	15.26	10.14	132	160	180	200*	225*	250*	280*	315*
	53.39	26.20	13000	35.70	23.71	17.80	11.86	132	160	180	200	225*	250*	280*	315*
	44.73	31.30	13000	42.61	28.30	21.30	14.15	132	160	180	200	225*	250*	280*	315*
	41.61	33.60	13000	45.80	30.42	22.90	15.21	132	160	180	200	225	250*		
	35.90	39.00	13000	53.09	35.26	26.54	17.63	132	160	180	200	225	250*	280*	
	31.32	44.70	13000	60.85	40.42	30.42	20.21	132	160	180	200	225	250	280*	315*
	26.79	52.30	13000	71.14	47.26	35.57	23.63	132	160	180	200	225	250	280*	315*
	22.44	62.40	13000	84.93	56.42	42.46	28.21	132	160	180	200	225	250	280*	315*
	20.18	69.40	13000	*90.00*	*59.40*	*45.00*	*29.70*					225	250	280	
	17.33	80.80	13000	*90.00*	*59.40*	*45.00*	*29.70*			180	200	225	250	280	315*
	14.64	95.60	13000	*90.00*	*59.40*	*45.00*	*29.70*	132	160	180	200	225	250	280	315*
	12.35	113.40	8400	*90.00*	*59.40*	*45.00*	*29.70*	132	160	180	200	225	250	280	315*
	8.05	173.90	7200	*90.00*	*59.40*	*45.00*	*29.70*	132	160	180	200	225	250	280	315*

	IEC - PAM bağlantısı yoktur / No IEC - PAM assembling on empty fields / Keine IEC - PAM-Verbindung
63	**IEC - PAM bağlantısı yapılır /** IEC - PAM assembling available on numbered fields / IEC - PAM-Verbindung möglich
80*	**IEC - PAM bağlantısı yapılacaksa P_{1max} değerleri aşılmamalıdır -** Do not exceed the P_{1max} values indicated on fields with asterix / Bei IEC - PAM-Verbindungen, sollten die P_{1max}-Werte nicht überschritten werden.

Tip Type Typ	i_{ges}	4-pol. 50 Hz 1400 rpm n_2 [min^{-1}]	M_{amax} f_B=1 4 - pol. [Nm]	W P_{1max} - $f_B \geq 1$ 4 - pol. 1400rpm [kW]	6 - pol. 930rpm [kW]	8 - pol. 700rpm [kW]	12 - pol. 465rpm [kW]	IEC - PAM f_B ⇨ 📖 79 - 183							
PKD G 8390/52	4830.19	0.29	20000	0.61	0.40	0.30	0.20	90*	100*	112*					
	3603.72	0.39	20000	0.81	0.54	0.41	0.27	90*	100*	112*					
	3018.87	0.46	20000	0.97	0.65	0.49	0.32	90	100*	112*					
W	2114.13	0.66	20000	1.39	0.92	0.69	0.46	90	100*	112*					
mm	**1786.51**	**0.78**	20000	1.64	1.09	0.82	0.55	90	100*	112*	132*	160*			
📖 271	**1463.24**	**0.96**	20000	2.00	1.33	1.00	0.67	90	100*	112*	132*	160*			
+	**1203.73**	**1.20**	20000	2.44	1.62	1.22	0.81	90	100*	112*	132*	160*			
IEC - PAM	**909.80**	**1.50**	20000	3.22	2.14	1.61	1.07	90	100	112*	132*	160*	180*		
mm	**714.84**	**2.00**	20000	4.10	2.72	2.05	1.36	90	100	112	132*	160*	180*		
📖 270 - 271	**623.65**	**2.20**	20000	4.70	3.12	2.35	1.56	90	100	112	132*	160*	180*		
	434.96	**3.20**	20000	6.74	4.48	3.37	2.24		100	112	132*	160*	180*		
	379.47	**3.70**	20000	7.73	5.13	3.86	2.57		100	112	132	160*	180*		
	271.85	**5.10**	20000	10.79	7.16	5.39	3.58	90	100	112	132	160*	180*		
	236.35	**5.90**	20000	12.41	8.24	6.20	4.12		100	112	132	160*	180*		
	172.19	**8.10**	20000	17.03	11.31	8.51	5.66		100	112	132	160	180*		
	144.85	**9.70**	18000	18.22	12.10	9.11	6.05		100	112	132	160	180*		
PKD G 8390	230.68	6.10	20000	12.71	8.44	6.35	4.22	132	160*	180*					
	194.04	7.20	20000	15.11	10.04	7.55	5.02	132	160	180*					
	151.87	9.20	20000	19.31	12.82	9.65	6.41		160	180*	200*				
W	127.75	11.00	20000	22.95	15.25	11.48	7.62		160	180	200*				
mm	**116.62**	**12.00**	20000	25.14	16.70	12.57	8.35	132	160	180					
📖 258	**90.63**	**15.40**	20000	32.35	21.49	16.18	10.75	132	160	180	200	225*			
+	**78.34**	**17.90**	20000	37.43	24.86	18.71	12.43	132	160	180	200	225*	250*		
IEC - PAM	**67.58**	**20.70**	20000	43.38	28.82	21.69	14.41	132	160	180	200	225*	250*	280*	
mm	**58.96**	**23.70**	20000	49.73	33.03	24.86	16.52	132	160	180	200	225	250*	280*	315*
📖 258 - 259	**50.42**	**27.80**	20000	58.15	38.63	29.08	19.31	132	160	180	200	225	250	280*	315*
	42.24	**33.10**	20000	69.41	46.11	34.71	23.05	132	160	180	200	225	250	280*	315*
	35.53	**39.40**	18000	74.27	49.34	37.13	24.67	132	160	180	200	225	250	280*	315*
	29.58	**47.30**	20000	99.12	65.84	49.56	32.92	132	160	180	200	225	250	280	315*
	25.30	**55.30**	20000	115.89	76.98	57.94	38.49	132	160	180	200	225	250	280	315*
	21.19	**66.10**	20000	138.36	91.91	69.18	45.96	132	160	180	200	225	250	280	315*
	17.83	**78.50**	19000	156.22	103.77	78.11	51.89	132	160	180	200	225	250	280	315*
	16.37	**85.50**	19000	*160.00*	*105.60*	*80.00*	*52.80*					225	250	280	315*
	14.75	**94.90**	15000	149.08	99.03	74.54	49.52	132	160	180	200	225	250	280	315*
	12.36	**113.30**	14000	*160.00*	*105.60*	*80.00*	*52.80*	132	160	180	200	225	250	280	315*
	11.63	**120.40**	17000	*160.00*	*105.60*	*80.00*	*52.80*	132	160	180	200	225	250	280	315*
	9.54	**146.80**	13000	*160.00*	*105.60*	*80.00*	*52.80*			180	200	225	250	280	315*
	8.06	**173.70**	12000	*160.00*	*105.60*	*80.00*	*52.80*	132	160	180	200	225	250	280	315*

	IEC - PAM bağlantısı yoktur / No IEC - PAM assembling on empty fields / Keine IEC - PAM-Verbindung
63	**IEC - PAM bağlantısı yapılır /** IEC - PAM assembling available on numbered fields / IEC - PAM-Verbindung möglich
80*	**IEC - PAM bağlantısı yapılacaksa P_{1max} değerleri aşılmamalıdır -** Do not exceed the P_{1max} values indicated on fields with asterix / Bei IEC - PAM-Verbindungen, sollten die P_{1max}-Werte nicht überschritten werden.

Tip Type Typ	i_{ges}	4-pol. 50 Hz 1400 rpm n_2 [min^{-1}]	M_{amax} f_B=1 4 - pol. [Nm]	W P_{1max} - $f_B \geq 1$ 4 - pol. 1400rpm [kW]	6 - pol. 930rpm [kW]	8 - pol. 700rpm [kW]	12 - pol. 465rpm [kW]	IEC - PAM f_B ⇨ 📖 79 - 183							
PKD 9390/52 W mm 📖 271 + IEC - PAM mm 📖 270 - 271	4933.39	0.28	32000	0.95	0.63	0.48	0.32	90*	100*	112*					
	3555.41	0.39	26000	1.07	0.71	0.54	0.36	90*	100*	112*					
	2913.46	0.48	26000	1.31	0.87	0.65	0.43	90	100*	112*					
	2114.30	**0.66**	32000	2.22	1.47	1.11	0.74	90	100*	112*	132*	160*			
	1795.13	**0.78**	32000	2.61	1.74	1.31	0.87	90	100*	112*	132*	160*			
	1424.59	**0.98**	32000	3.29	2.19	1.65	1.09	90	100	112*	132*	160*			
	1119.32	**1.30**	32000	4.19	2.78	2.10	1.39	90	100	112	132*	160*			
	846.00	**1.70**	32000	5.55	3.68	2.77	1.84	90	100	112	132*	160*	180*		
	706.54	**2.00**	32000	6.64	4.41	3.32	2.21	90	100	112	132*	160*	180*		
	609.75	**2.30**	32000	7.69	5.11	3.85	2.56	90	100	112	132*	160*	180*		
	444.25	**3.20**	32000	10.56	7.01	5.28	3.51	90	100	112	132	160*			
	386.23	**3.60**	32000	12.15	8.07	6.07	4.03	90	100	112	132	160*	180*		
	281.40	**5.00**	32000	16.67	11.07	8.34	5.54		100	112	132	160	180*		
	223.16	**6.30**	32000	21.02	13.96	10.51	6.98					160	180*		
	191.78	**7.30**	32000	*22.00*	*14.52*	*11.00*	*7.26*					160	180		
PKD 9390 W mm 📖 262 + IEC - PAM mm 📖 262 - 263	297.79	4.70	32000	15.75	10.46	7.88	5.23	132	160	180*					
	253.26	5.50	32000	18.52	12.30	9.26	6.15	132	160	180*					
	197.62	7.10	32000	23.74	15.77	11.87	7.88		160	180	200*				
	153.11	**9.10**	32000	30.64	20.35	15.32	10.18	132	160	180					
	120.24	**11.60**	32000	39.01	25.92	19.51	12.96	132	160	180	200	225*			
	102.37	**13.70**	32000	45.82	30.44	22.91	15.22	132	160	180	200	225	250*		
	91.73	**15.30**	32000	51.14	33.97	25.57	16.99	132	160	180	200	225	250*	280*	
	79.99	**17.50**	32000	58.65	38.96	29.32	19.48	132	160	180	200	225	250	280*	315*
	69.03	**20.30**	32000	67.96	45.14	33.98	22.57	132	160	180	200	225	250	280*	315*
	58.71	**23.80**	32000	79.90	53.08	39.95	26.54	132	160	180	200	225	250	280	315*
	49.75	**28.10**	32000	94.29	62.64	47.15	31.32	132	160	180	200	225	250	280	315*
	40.77	**34.30**	32000	115.06	76.43	57.53	38.22	132	160	180	200	225	250	280	315*
	39.14	**35.80**	32000	119.85	79.62	59.93	39.81	132	160	180	200	225	250	280	
	34.13	**41.00**	32000	137.45	91.30	68.72	45.65	132	160	180	200	225	250	280	315*
	29.35	**47.70**	32000	*160.00*	*105.60*	*80.00*	*52.80*	132	160	180	200	225	250	280	315*
	24.96	**56.10**	32000	*160.00*	*105.60*	*80.00*	*52.80*	132	160	180	200	225	250	280	315*
	20.41	**68.60**	32000	*160.00*	*105.60*	*80.00*	*52.80*	132	160	180	200	225	250	280	315*
	17.29	**81.00**	20500	*160.00*	*105.60*	*80.00*	*52.80*	132	160	180	200	225	250	280	315*
	14.17	**98.80**	19400	*160.00*	*105.60*	*80.00*	*52.80*	132	160	180	200	225	250	280	315*
	11.56	**121.10**	18400	*160.00*	*105.60*	*80.00*	*52.80*	132	160	180	200	225	250	280	315*
	10.71	**130.70**	18000	*160.00*	*105.60*	*80.00*	*52.80*						250	280	315*

	IEC - PAM bağlantısı yoktur / No IEC - PAM assembling on empty fields / Keine IEC - PAM-Verbindung
63	**IEC - PAM bağlantısı yapılır /** IEC - PAM assembling available on numbered fields / IEC - PAM-Verbindung möglich
80*	**IEC - PAM bağlantısı yapılacaksa P_{1max} değerleri aşılmamalıdır -** Do not exceed the P_{1max} values indicated on fields with asterix / Bei IEC - PAM-Verbindungen, sollten die P_{1max}-Werte nicht überschritten werden.

Tip Type Typ	i_{ges}	4-pol. 50 Hz 1400 rpm n_2 [min^{-1}]	M_{amax} f_B=1 4 - pol. [Nm]	W P_{1max} - $f_B \geq 1$				IEC - PAM f_B ⇨ 📖 79 - 183							
				4 - pol. 1400rpm [kW]	6 - pol. 930rpm [kW]	8 - pol. 700rpm [kW]	12 - pol. 465rpm [kW]								
PKD G 9390/63 W mm 📖 273 + IEC - PAM mm 📖 272 - 273	13432.68	0.10	50000	0.56	0.37	0.28	0.19	90*	100*	112*	132	160			
	11954.86	0.12	50000	0.67	0.44	0.33	0.22	90*	100*	112*	132*	160*			
	9713.32	0.14	50000	0.77	0.51	0.39	0.26	90*	100*	112*	132*	160*	180*		
	8306.57	0.17	50000	0.89	0.59	0.45	0.30	90*	100*	112*	132*	160*	180*		
	7842.34	0.18	50000	0.94	0.62	0.47	0.31	90*	100*	112*	132*	160*	180*		
	6706.55	0.21	50000	1.10	0.73	0.55	0.37	90*	100*	112*	132*	160*	180*		
	5575.65	0.25	50000	1.31	0.86	0.65	0.43	90*	100*	112*	132*	160*	180*		
	4441.42	0.32	50000	1.68	1.11	0.84	0.56	90	100*	112*	132*	160*	180*		
	3692.48	0.38	50000	1.99	1.31	0.99	0.66	90	100*	112*	132*	160*	180*		
	3210.12	0.44	50000	2.30	1.52	1.15	0.76	90	100	112*	132*	160*	180*		
	2679.06	0.52	50000	2.72	1.80	1.36	0.90	90	100	112*	132*	160*	180*		
	2316.27	0.60	50000	3.14	2.07	1.57	1.04	90	100	112*	132*	160*	180*		
	2052.10	0.68	50000	3.56	2.35	1.78	1.18	90	100	112*	132*	160*	180*		
	1774.21	0.79	50000	4.14	2.73	2.07	1.37	90	100	112	132*	160*	180*		
PKD G 9390/62 W mm 📖 273 + IEC - PAM mm 📖 272 - 273	1623.67	0.86	50000	4.50	2.97	2.25	1.49		100	112	132*	160*	180*	200*	
	1353.86	1.0	50000	5.24	3.46	2.62	1.73		100	112	132*	160*	180*	200*	225*
	1165.22	1.2	50000	6.28	4.15	3.14	2.08		100	112	132*	160*	180*	200*	225*
	979.31	1.4	50000	7.33	4.84	3.66	2.42		100	112	132*	160*	180*	200*	225*
	816.57	0.7	50000	8.90	5.87	4.45	2.94		100	112	132*	160*	180*	200*	225*
	702.80	2.0	50000	10.47	6.91	5.24	3.46		100	112	132	160*	180*	200*	225*
	607.63	2.3	50000	12.04	7.95	6.02	3.98		100	112	132	160*	180*	200*	225*
	538.33	2.6	50000	13.61	8.98	6.81	4.49		100	112	132	160*	180*	200*	225*
	474.22	3.0	50000	15.71	10.37	7.85	5.19		100	112	132	160	180*	200*	225*
	431.00	3.2	50000	16.75	11.06	8.38	5.53		100	112	132	160	180*	200*	225*
	370.95	3.8	50000	19.90	13.13	9.95	6.57		100	112	132	160	180	200*	225*
	320.72	4.4	50000	23.04	15.20	11.52	7.60		100	112	132	160	180	200*	225*
	297.17	4.7	50000	24.61	16.24	12.30	8.12				132	160	180	200*	225*
	270.09	5.2	50000	27.23	17.97	13.61	8.99				132	160	180	200*	225*
	233.51	6.0	50000	31.41	20.73	15.71	10.37				132	160	180	200	225*
	208.95	6.7	50000	35.08	23.15	17.54	11.58						180	200	225*

	IEC - PAM bağlantısı yoktur / No IEC - PAM assembling on empty fields / Keine IEC - PAM-Verbindung
63	**IEC - PAM bağlantısı yapılır /** IEC - PAM assembling available on numbered fields / IEC - PAM-Verbindung möglich
80*	**IEC - PAM bağlantısı yapılacaksa P_{1max} değerleri aşılmamalıdır -** Do not exceed the P_{1max} values indicated on fields with asterix / Bei IEC - PAM-Verbindungen, sollten die P_{1max}-Werte nicht überschritten werden.

Tip Type Typ	i_{ges}	4-pol. 50 Hz 1400 rpm n_2 [min^{-1}]	M_{amax} f_B=1 4 - pol. [Nm]	W P_{1max} - $f_B \geq 1$				IEC - PAM f_B ⇨ 📖 79 - 183							
				4 - pol. 1400rpm [kW]	6 - pol. 930rpm [kW]	8 - pol. 700rpm [kW]	12 - pol. 465rpm [kW]								
PKD G 9390 W mm 📖 266 + IEC - PAM mm 📖 266 - 267	200.57	7.0	50000	36.65	24.19	18.32	12.10	132	160	180	200	225*			
	173.41	8.1	50000	42.41	27.99	21.20	14.00	132	160	180	200	225*			
	154.29	9.1	50000	47.64	31.45	23.82	15.73	132	160	180	200	225	250*	280*	
	133.53	10.0	50000	52.36	34.55	26.18	17.28	132	160	180	200	225	250*	280*	
	118.18	12.0	50000	62.83	41.47	31.41	20.74	132	160	180	200	225	250	280*	315*
	102.18	14.0	50000	73.30	48.38	36.65	24.19	132	160	180	200	225	250	280*	315*
	89.60	16.0	50000	83.77	55.29	41.88	27.65			180	200	225	250	280*	315*
	81.43	17.0	50000	89.01	58.74	44.50	29.37			180	200	225	250	280*	315*
	70.41	20.0	50000	104.71	69.11	52.36	34.56			180	200	225	250	280	315*
	65.07	22.0	50000	115.18	76.02	57.59	38.01					225	250	280	315*
	56.26	25.0	50000	130.89	86.39	65.45	43.20					225	250	280	315*
	47.79	29.0	50000	151.83	100.21	75.92	50.11	132	160	180	200	225	250	280	315*
	41.32	34.0	50000	178.01	117.49	89.01	58.75	132	160	180	200	225	250	280	315*
	36.24	39.0	50000	200.00	132.00	100.00	66.00			180	200	225	250	280	315
	32.93	43.0	50000	200.00	132.00	100.00	66.00			180	200	225	250	280	315
	28.47	49.0	50000	200.00	132.00	100.00	66.00			180	200	225	250	280	315
	26.31	53.0	50000	200.00	132.00	100.00	66.00					225	250	280	315
	22.75	62.0	50000	200.00	132.00	100.00	66.00					225	250	280	315
	19.41	72.0	50000	200.00	132.00	100.00	66.00								315
	16.78	83.0	50000	200.00	132.00	100.00	66.00								315

	IEC - PAM bağlantısı yoktur / No IEC - PAM assembling on empty fields / Keine IEC - PAM-Verbindung
63	**IEC - PAM bağlantısı yapılır /** IEC - PAM assembling available on numbered fields / IEC - PAM-Verbindung möglich
80*	**IEC - PAM bağlantısı yapılacaksa P_{1max} değerleri aşılmamalıdır -** Do not exceed the P_{1max} values indicated on fields with asterix / Bei IEC - PAM-Verbindungen, sollten die P_{1max}-Werte nicht überschritten werden.

TR GENEL PARÇA LİSTESİ | EN GENERAL PART LIST | DE ALLGEMEINE STUCKLISTE

PKD A 0290

DA - TMA - ÇMA - DG - TMG

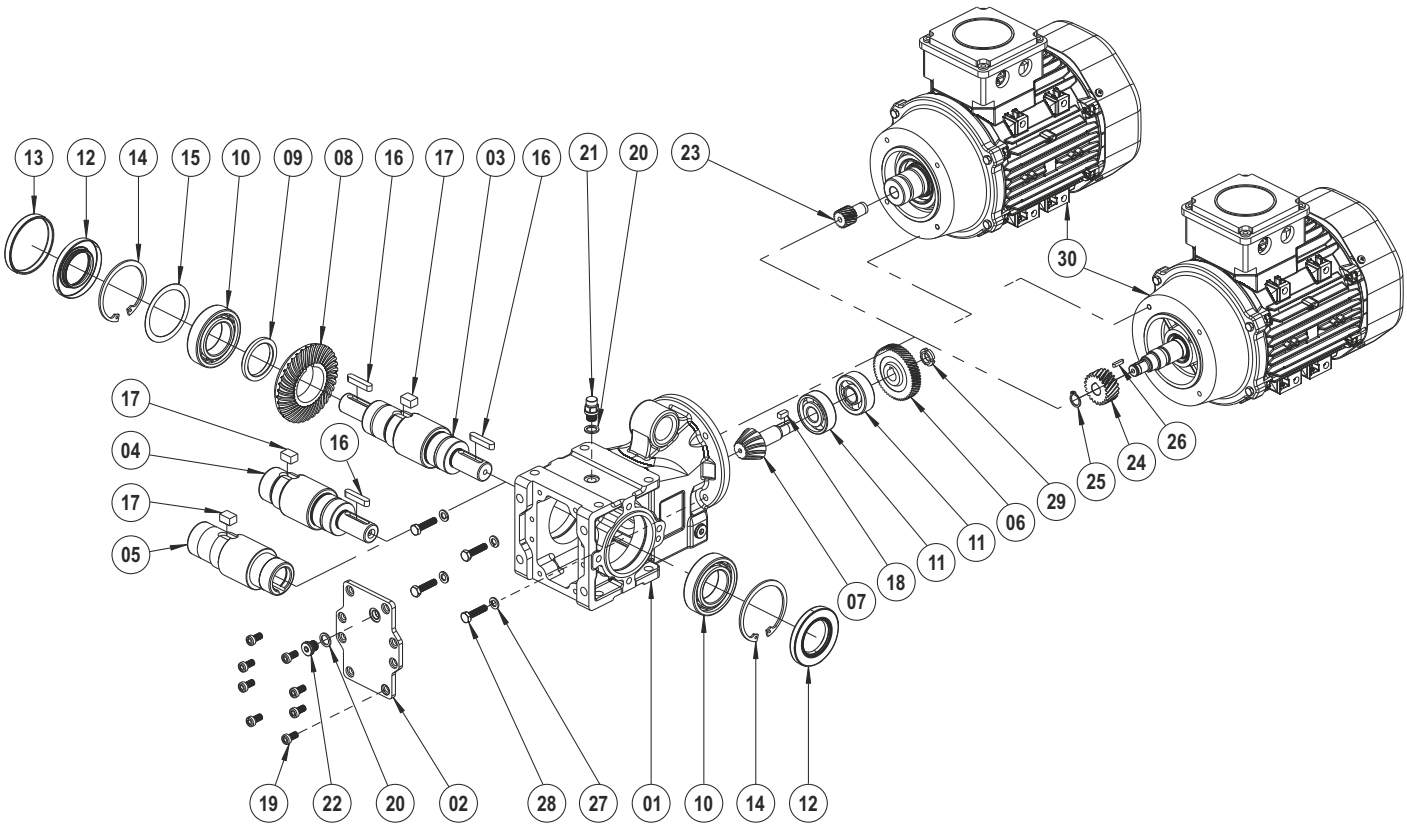

01	Gövde	**01**	Gear Case	**01**	Gehäuse
02	Kapak	**02**	Cover	**02**	Abdeckung
03	Çift Çıkış Mili	**03**	Output Solid Shaft	**03**	Abtriebswelle
04	Tek Çıkış Mili	**04**	Output Solid Shaft	**04**	Abtriebswelle
05	Çıkış Şaftı	**05**	Hollow Shaft	**05**	Hohlwelle
06	Z2 Dişlisi	**06**	Driving Gear	**06**	Antriebsrad
07	Z3 Dişlisi	**07**	Pinion Shaft	**07**	Ritzelwelle
08	Z4 Dişlisi	**08**	Driven Gear	**08**	Abtriebsrad
09	Burç	**09**	Spacer	**09**	Distanzbuchse
10	Rulman	**10**	Bearing	**10**	Kugellager
11	Rulman	**11**	Bearing	**11**	Kugellager
12	Yağ Keçesi	**12**	Oil Seal	**12**	Öldichtung
13	Yağ Kapağı	**13**	Oil Cover	**13**	Ölabdeckung
14	Segman (DIN 472)	**14**	Circlip (DIN 472)	**14**	Sicherungsring (DIN 472)
15	Layner	**15**	Shim	**15**	Passscheibe
16	Kama	**16**	Key	**16**	Passfeder
17	Kama	**17**	Key	**17**	Passfeder
18	Kama	**18**	Key	**18**	Passfeder
19	Cıvata (DIN 912)	**19**	Bolt (DIN 912)	**19**	Verschrauben (DIN 912)
20	Rondela (DIN 7603)	**20**	Washer (DIN 7603)	**20**	Distanzscheibe (DIN 7603)
21	Havalandırma Tapası	**21**	Vent Plug	**21**	Entlüftungsstopfen
22	Yağ Tapası	**22**	Oil Plug	**22**	Ölstöpsel
23	Z1 Dişlisi	**23**	Driving Pinion	**23**	Antriebsritzel
24	Z1 Dişlisi (Kamalı)	**24**	Driving Pinion (With Key)	**24**	Antriebsritzel (mit Passfeder)
25	Segman (DIN 471)	**25**	Circlip (DIN 471)	**25**	Sicherungsring (DIN 471)
26	Kama	**26**	Key	**26**	Passfeder
27	Rondela (DIN 127)	**27**	Washer (DIN 127)	**27**	Distanzscheibe (DIN 127)
28	Cıvata (DIN 933)	**28**	Bolt (DIN 933)	**28**	Verschrauben (DIN 933)
29	Somun (DIN 981)	**29**	Nut (DIN 981)	**29**	Schraubenmutter (DIN 981)
30	Motor	**30**	Motor	**30**	Motor

PGR DRIVE TECHNOLOGIES

TR GENEL PARÇA LİSTESİ

EN GENERAL PART LIST

DE ALLGEMEINE STUCKLISTE

PKD B 0290 ... H 5290

DA - TMA - ÇMA - DG - TMG

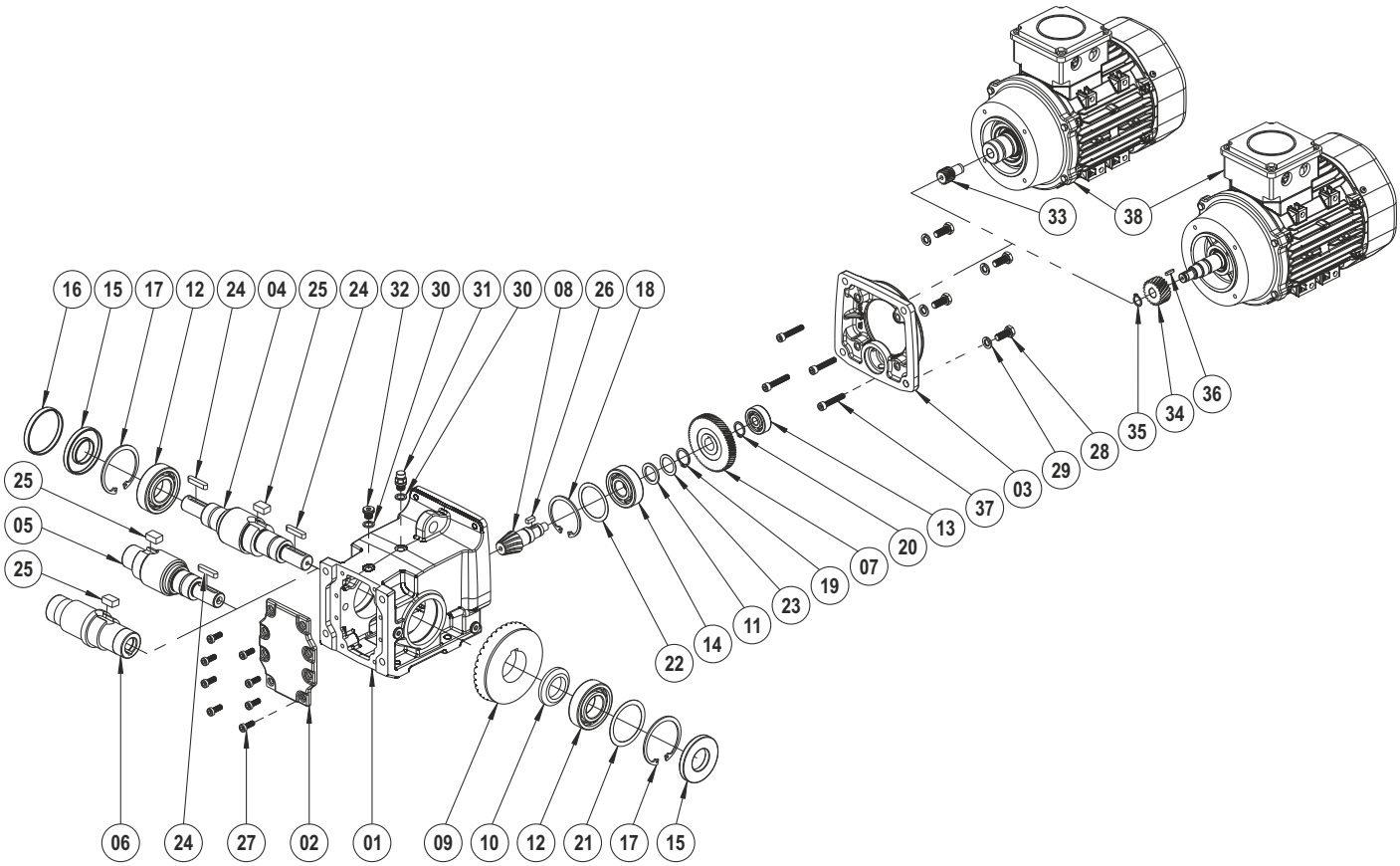

01	Gövde	20	Segman (DIN 471)	01	Gear Case	20	Circlip (DIN 471)
02	Kapak	21	Layner	02	Cover	21	Shim
03	Ara Bağlantı Flanşı	22	Layner	03	Intermediate Flange	22	Shim
04	Çift Çıkış Mili	23	Layner	04	Output Solid Shaft	23	Shim
05	Tek Çıkış Mili	24	Kama	05	Output Solid Shaft	24	Key
06	Çıkış Şaftı	25	Kama	06	Hollow Shaft	25	Key
07	Z2 Dişlisi	26	Kama	07	Driving Gear	26	Key
08	Z3 Dişlisi	27	Cıvata (DIN 912)	08	Pinion Shaft	27	Bolt (DIN 912)
09	Z4 Dişlisi	28	Cıvata (DIN 933)	09	Driven Gear	28	Bolt (DIN 933)
10	Burç	29	Rondela (DIN 127)	10	Spacer	29	Washer (DIN 127)
11	Rondela	30	Rondela (DIN 7603)	11	Washer	30	Washer (DIN 7603)
12	Rulman	31	Havalandırma Tapası	12	Bearing	31	Vent Plug
13	Rulman	32	Yağ Tapası	13	Bearing	32	Oil Plug
14	Rulman	33	Z1 Dişlisi	14	Bearing	33	Driving Pinion
15	Yağ Keçesi	34	Z1 Dişlisi (Kamalı)	15	Oil Seal	34	Driving Pinion (With Key)
16	Yağ Kapağı	35	Segman (DIN 471)	16	Oil Cover	35	Circlip (DIN 471)
17	Segman (DIN 472)	36	Kama	17	Circlip (DIN 472)	36	Key
18	Segman (DIN 472)	37	Cıvata (DIN 912)	18	Circlip (DIN 472)	37	Bolt (DIN 912)
19	Segman (DIN 471)	38	Motor	19	Circlip (DIN 471)	38	Motor

01	Gehäuse	20	Sicherungsring (DIN 471)
02	Kapak	21	Passscheibe
03	Zwischenflansch	22	Passscheibe
04	Abtriebswelle	23	Passscheibe
05	Abtriebswelle	24	Passfeder
06	Hohlwelle	25	Passfeder
07	Antriebsrad	26	Passfeder
08	Ritzelwelle	27	Verschrauben (DIN 912)
09	Abtriebsrad	28	Verschrauben (DIN 933)
10	Distanzbuchse	29	Distanzscheibe (DIN 127)
11	Distanzscheibe	30	Distanzscheibe (DIN 7603)
12	Kugellager	31	Entlüftungsstopfen
13	Kugellager	32	Ölstöpsel
14	Kugellager	33	Antriebsritzel
15	Öldichtung	34	Antriebsritzel (mit Passfeder)
16	Ölabdeckung	35	Sicherungsring (DIN 471)
17	Sicherungsring (DIN 472)	36	Passfeder
18	Sicherungsring (DIN 472)	37	Verschrauben (DIN 912)
19	Sicherungsring (DIN 471)	38	Motor

TR GENEL PARÇA LİSTESİ | EN GENERAL PART LIST | DE ALLGEMEINE STUCKLISTE

PKD 1390 ... G 9390

DA - TMA - ÇMA - DG - TMG

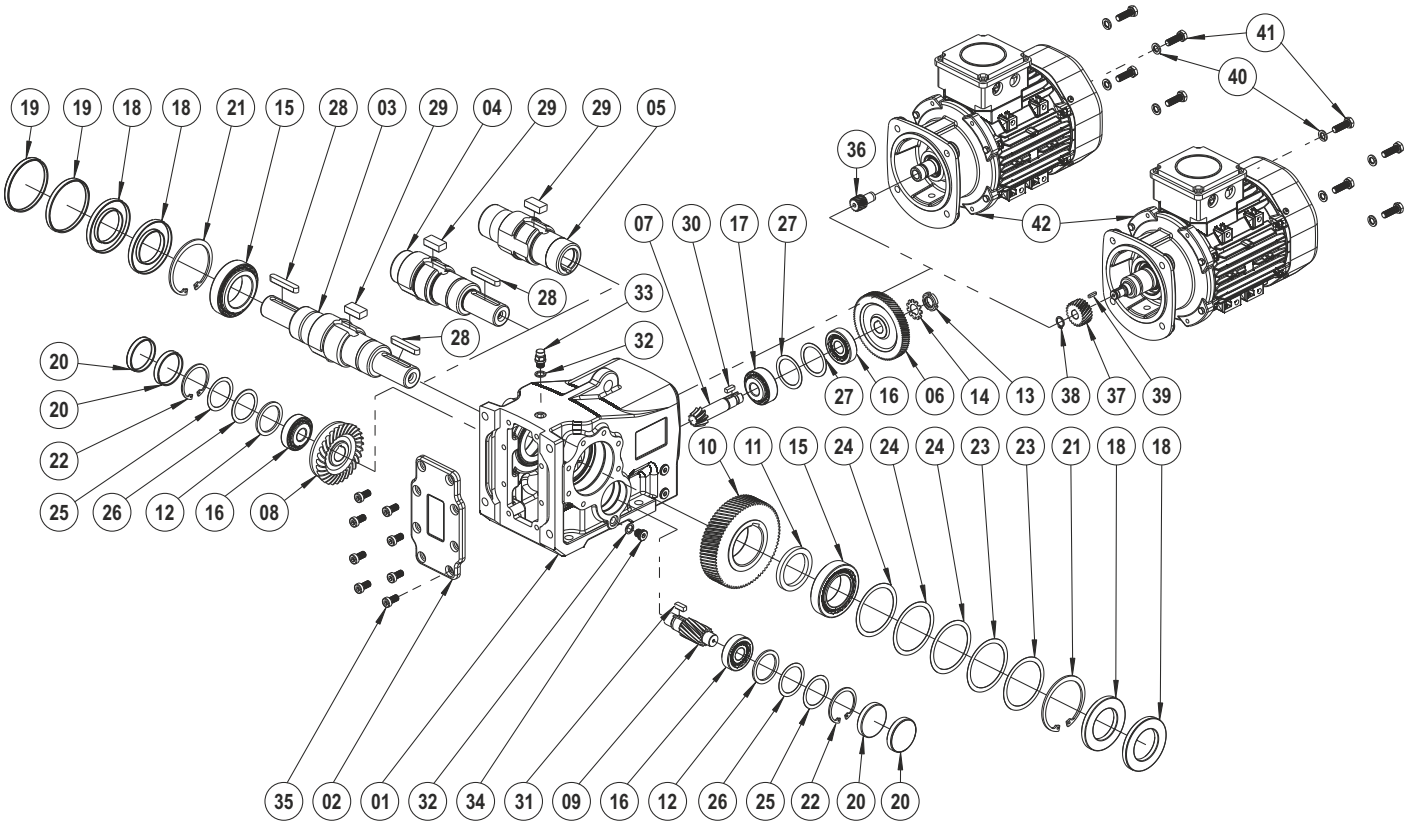

01	Gövde	22	Segman (DIN 472)	01	Gear Case	22	Circlip (DIN 472)	01	Gehäuse	22	Sicherungsring (DIN 472)
02	Kapak	23	Layner	02	Cover	23	Shim	02	Abdeckung	23	Passscheibe
03	Çift Çıkış Mili	24	Layner	03	Output Solid Shaft	24	Shim	03	Abtriebswelle	24	Passscheibe
04	Tek Çıkış Mili	25	Layner	04	Output Solid Shaft	25	Shim	04	Abtriebswelle	25	Passscheibe
05	Çıkış Şaftı	26	Layner	05	Hollow Shaft	26	Shim	05	Hohlwelle	26	Passscheibe
06	Z2 Dişlisi	27	Layner	06	Driving Gear	27	Shim	06	Antriebsrad	27	Passscheibe
07	Z3 Dişlisi	28	Kama	07	Pinion Shaft	28	Key	07	Ritzelwelle	28	Passfeder
08	Z4 Dişlisi	29	Kama	08	Driven Gear	29	Key	08	Abtriebsrad	29	Passfeder
09	Z5 Dişlisi	30	Kama	09	Pinion Shaft	30	Key	09	Ritzelwelle	30	Passfeder
10	Z6 Dişlisi	31	Kama	10	Driven Gear	31	Key	10	Abtriebsrad	31	Passfeder
11	Burç	32	Rondela (DIN 7603)	11	Spacer	32	Washer (DIN 7603)	11	Distanzbuchse	32	Distanzscheibe (DIN 7603)
12	Rondela	33	Havalandırma Tapası	12	Washer	33	Vent Plug	12	Distanzscheibe	33	Entlüftungsstopfen
13	Somun (DIN 981)	34	Yağ Tapası	13	Nut (DIN 981)	34	Oil Plug	13	Schraubenmutter (DIN 981)	34	Ölstöpsel
14	Rondela (DIN 5406)	35	Cıvata (DIN 912)	14	Washer (DIN 5406)	35	Bolt (DIN 912)	14	Distanzscheibe (DIN 5406)	35	Verschrauben (DIN 912)
15	Rulman	36	Z1 Dişlisi	15	Bearing	36	Driving Pinion	15	Kugellager	36	Antriebsritzel
16	Rulman	37	Z1 Dişlisi (Kamalı)	16	Bearing	37	Driving Pinion (With Key)	16	Kugellager	37	Antriebsritzel (mit Passfeder)
17	Rulman	38	Segman (DIN 471)	17	Bearing	38	Circlip (DIN 471)	17	Kugellager	38	Sicherungsring (DIN 471)
18	Yağ Keçesi	39	Kama	18	Oil Seal	39	Key	18	Öldichtung	39	Passfeder
19	Yağ Kapağı	40	Rondela (DIN 127)	19	Oil Cover	40	Washer (DIN 127)	19	Ölabdeckung	40	Distanzscheibe (DIN 127)
20	Yağ Kapağı	41	Cıvata (DIN 933)	20	Oil Cover	41	Bolt (DIN 933)	20	Ölabdeckung	41	Verschrauben (DIN 933)
21	Segman (DIN 472)	42	Motor	21	Circlip (DIN 472)	42	Motor	21	Sicherungsring (DIN 472)	42	Motor

TR GENEL PARÇA LİSTESİ | EN GENERAL PART LIST | DE ALLGEMEINE STUCKLISTE

PKD 6390/32 ... G 9390/63

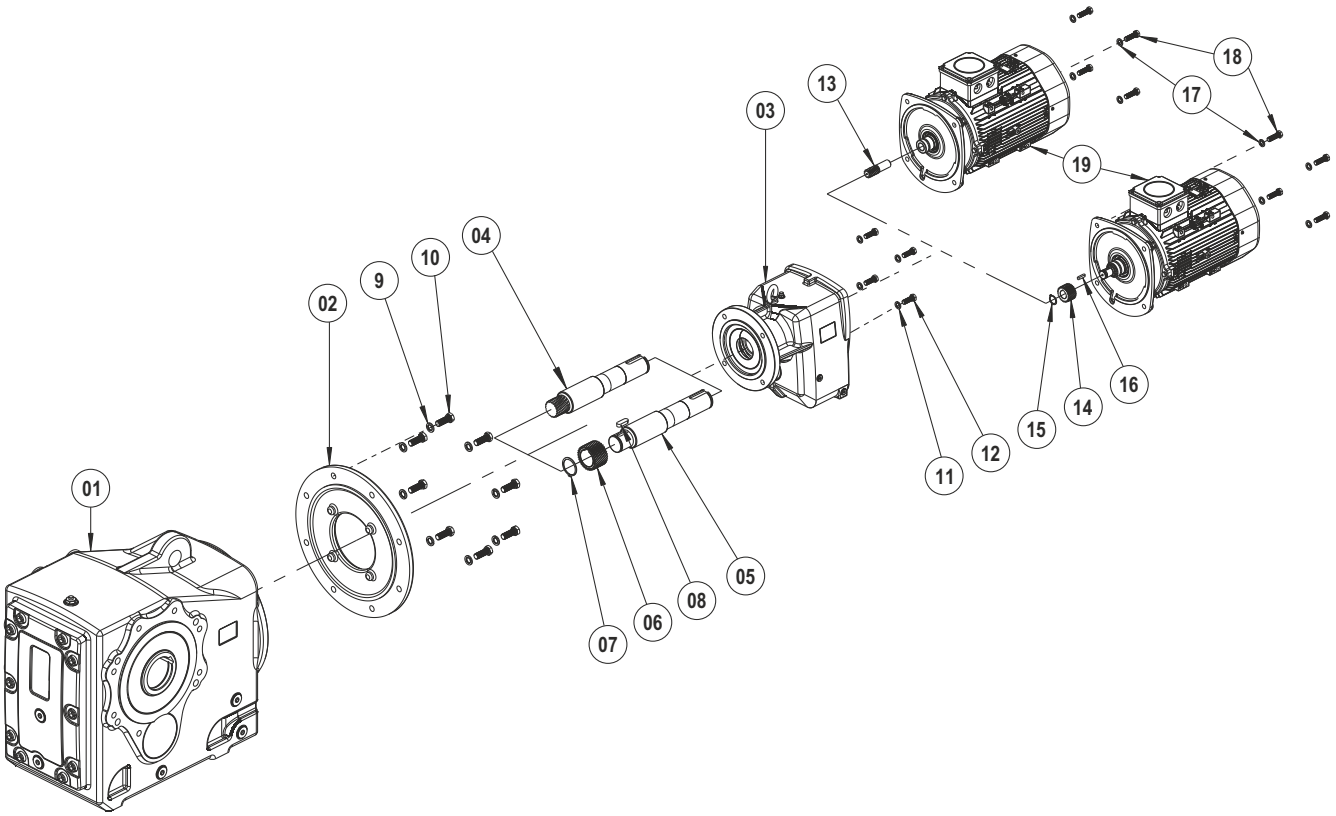

01	PKD Montajlı Redüktör	01	PKD Mounted Gear Unit	01	PKD Montiertes Getriebe
02	Ara Bağlantı Flanşı	02	Intermediate Flange	02	Zwischenflansch
03	PF Montajlı Redüktör	03	PF Mounted Gear Unit	03	PF Montiertes Getriebe
04	Ara Mil (Dişlili)	04	Intermediate Shaft (With Gear)	04	Übertragungswelle (mit Zahnrad)
05	Ara Mil (Kamalı)	05	Intermediate Shaft (With Key)	05	Übertragungswelle (mit Passfeder)
06	Ara Dişli (Kamalı)	06	Intermadiate Gear (With Key)	06	Übertragungswelle (mit Passfeder)
07	Segman (DIN 471)	07	Circlip (DIN 471)	07	Sicherungsring (DIN 471)
08	Kama	08	Key	08	Passfeder
09	Rondela (DIN 127)	09	Washer (DIN 127)	09	Distanzscheibe (DIN 127)
10	Cıvata (DIN 933)	10	Bolt (DIN 933)	10	Verschrauben (DIN 933)
11	Rondela (DIN 127)	11	Washer (DIN 127)	11	Distanzscheibe (DIN 127)
12	Cıvata (DIN 933)	12	Bolt (DIN 933)	12	Verschrauben (DIN 933)
13	Z1 Dişlisi	13	Driving Pinion	13	Antriebsritzel
14	Z1 Dişlisi (Kamalı)	14	Driving Pinion (With Key)	14	Antriebsritzel (mit Passfeder)
15	Segman (DIN 471)	15	Circlip (DIN 471)	15	Sicherungsring (DIN 471)
16	Kama	16	Key	16	Passfeder
17	Rondela (DIN 127)	17	Washer (DIN 127)	17	Distanzscheibe (DIN 127)
18	Cıvata (DIN 933)	18	Bolt (DIN 933)	18	Verschrauben (DIN 933)
19	Motor	19	Motor	19	Motor

TR GENEL PARÇA LİSTESİ | EN GENERAL PART LIST | DE ALLGEMEINE STUCKLISTE

PKD 1390 ... G 9390

İndirgeyici Gövde / Reduction Gear Case / Anbaugehäuse

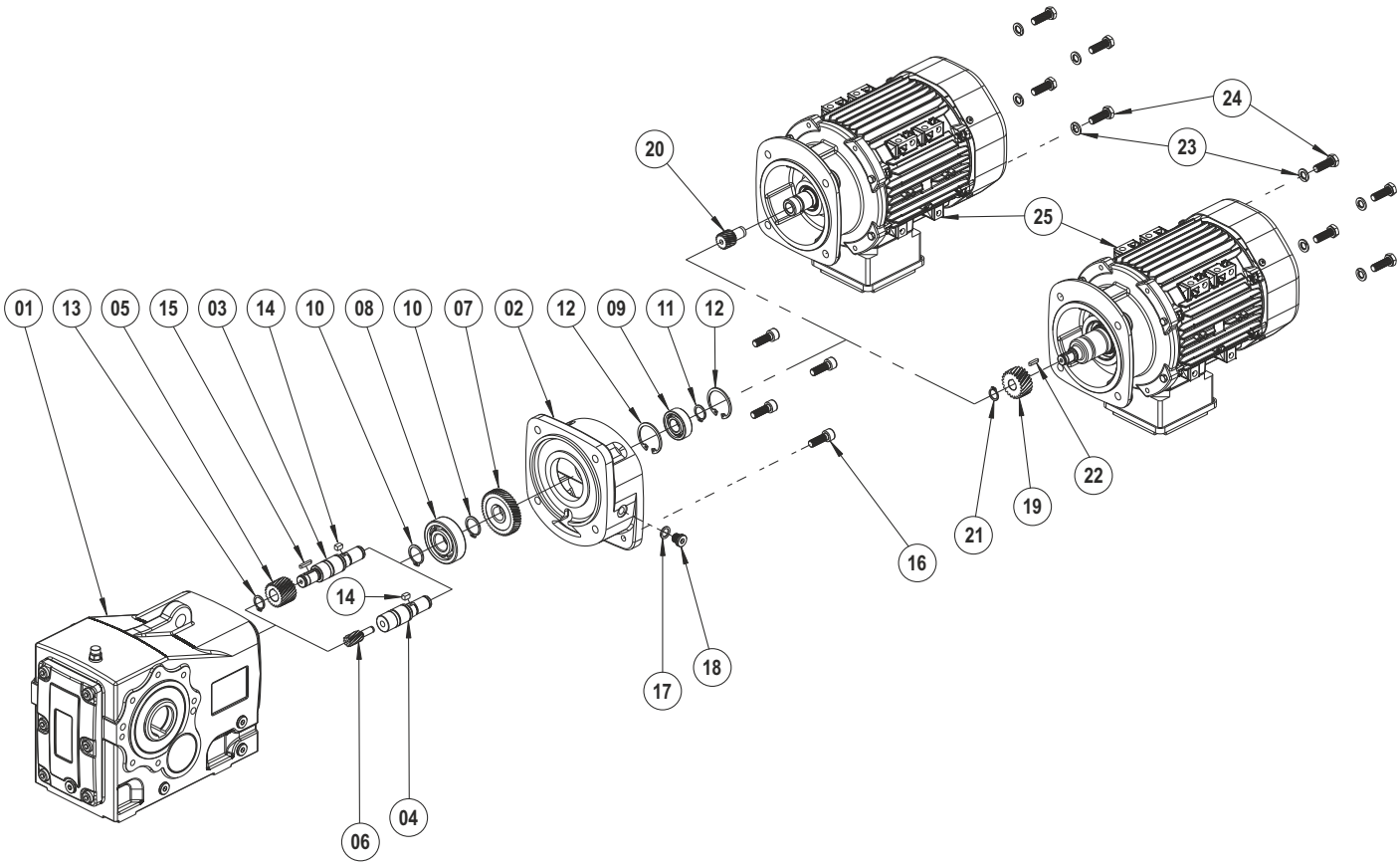

01	PKD Montajlı Redüktör	**01**	PKD Mounted Gear Unit	**01**	PKD Montiertes Getriebe
02	İndirgeyici Gövde	**02**	Reduction Gear Case	**02**	Anbaugehäuse
03	Ara Mil (Kamalı)	**03**	Intermediate Shaft (With Key)	**03**	Übertragungswelle (mit Passfeder)
04	Ara Mil	**04**	Intermediate Shaft	**04**	Übertragungswelle
05	Ara Dişli (Kamalı)	**05**	Intermadiate Gear (With Key)	**05**	Zwischengetriebe (mit Passfeder)
06	Ara Dişli	**06**	Intermadiate Gear	**06**	Zwischengetriebe
07	Z2 Dişlisi	**07**	Driving Gear	**07**	Antriebsrad
08	Rulman	**08**	Bearing	**08**	Kugellager
09	Rulman	**09**	Bearing	**09**	Kugellager
10	Segman (DIN 471)	**10**	Circlip (DIN 471)	**10**	Sicherungsring (DIN 471)
11	Segman (DIN 471)	**11**	Circlip (DIN 471)	**11**	Sicherungsring (DIN 471)
12	Segman (DIN 472)	**12**	Circlip (DIN 472)	**12**	Sicherungsring (DIN 472)
13	Segman (DIN 471)	**13**	Circlip (DIN 471)	**13**	Sicherungsring (DIN 471)
14	Kama	**14**	Key	**14**	Passfeder
15	Kama	**15**	Key	**15**	Passfeder
16	Cıvata (DIN 912)	**16**	Bolt (DIN 912)	**16**	Verschrauben (DIN 912)
17	Rondela (DIN 7603)	**17**	Washer (DIN 7603)	**17**	Distanzscheibe (DIN 7603)
18	Yağ Tapası	**18**	Oil Plug	**18**	Ölstöpsel
19	Z1 Dişlisi (Kamalı)	**19**	Driving Pinion (With Key)	**19**	Antriebsritzel (mit Passfeder)
20	Z1 Dişlisi	**20**	Driving Pinion	**20**	Antriebsritzel
21	Segman (DIN 471)	**21**	Circlip (DIN 471)	**21**	Sicherungsring (DIN 471)
22	Kama	**22**	Key	**22**	Passfeder
23	Rondela (DIN 127)	**23**	Washer (DIN 127)	**23**	Distanzscheibe (DIN 127)
24	Cıvata (DIN 933)	**24**	Bolt (DIN 933)	**24**	Verschrauben (DIN 933)
25	Motor	**25**	Motor	**25**	Motor

TR GENEL PARÇA LİSTESİ | EN GENERAL PART LIST | DE ALLGEMEINE STUCKLISTE

PKD A 0290

Aksesuarlar / Accessories / Zubehör

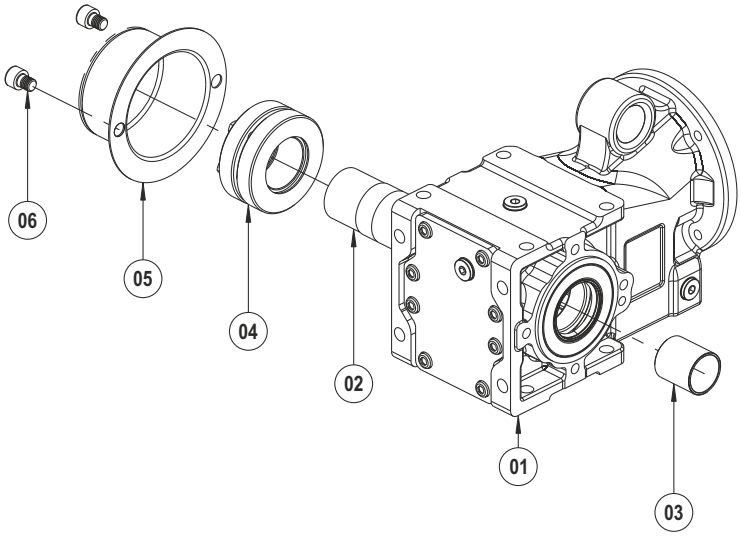

Konik Sıktırma, (KS) Koruma Kapağı (KK)

01 PKD Montajlı Redüktör
02 Konik Sıktırma Şaftı
03 Konik Sıktırma Burcu
04 Konik Sıktırma
05 Konik Sıktırma Koruma Kapağı
06 Cıvata (DIN 912)

Shrink Disk, Protection Cover

01 PKD Mounted Gear Unit
02 Shrink Disk Hollow Shaft
03 Shrink Disk Bushing
04 Shrink Disk
05 Shrink Disk Cover
06 Bolt (DIN 912)

Schrumpfscheibe, Schutzkappe

01 PKD Montiertes Getriebe
02 Schrumpfscheibe Hohlwelle
03 Schrumpfscheibenbuchse
04 Schrumpfscheibe
05 Schrumpfscheibedeckel
06 Verschrauben (DIN 912)

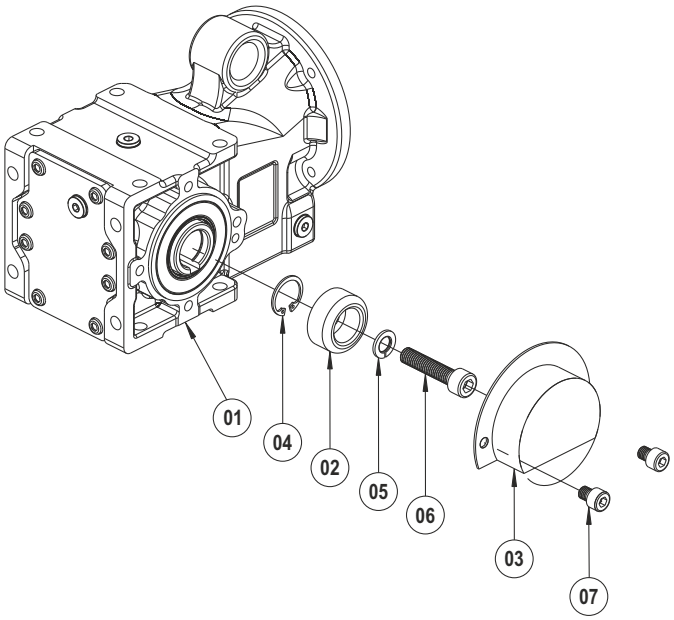

Çektirme, (Ç) Koruma Kapağı (KK)

01 PKD Montajlı Redüktör
02 Çektirme Rondelası
03 Şaft Koruma Kapağı
04 Segman (DIN 472)
05 Rondela (DIN 127)
06 Cıvata (DIN 912)
07 Cıvata (DIN 912)

Puller, Protection Cover

01 PKD Mounted Gear Unit
02 Puller Washer
03 Protection Cover
04 Circlip (DIN 472)
05 Washer (DIN 127)
06 Bolt (DIN 912)
07 Bolt (DIN 912)

Befestigungsbausatz, Schutzkappe

01 PKD Montiertes Getriebe
02 Abziehscheibe
03 Schutzhülle
04 Sicherungsring (DIN 472)
05 Distanzscheibe (DIN 127)
06 Verschrauben (DIN 912)
07 Verschrauben (DIN 912)

TR GENEL PARÇA LİSTESİ | EN GENERAL PART LIST | DE ALLGEMEINE STUCKLISTE

PKD A 0290

Aksesuarlar / Accessories / Zubehör

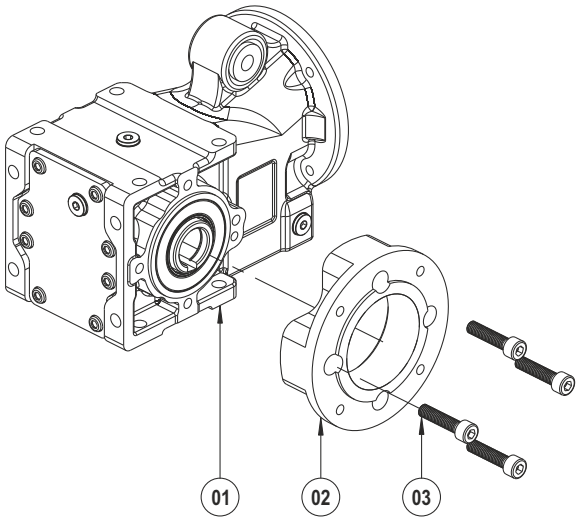

B5 Çıkış Flanşı

01 PKD Montajlı Redüktör
02 B5 Çıkış Flanşı
03 Cıvata (DIN 912)

B5 Output Flange

01 PKD Mounted Gear Unit
02 B5 Output Flange
03 Bolt (DIN 912)

B5 Abtriebsflansch

01 PKD Montiertes Getriebe
02 B5 Abtriebsflansch
03 Verschrauben (DIN 912)

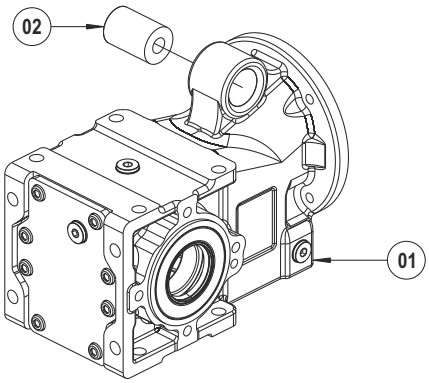

Lastik Takoz (LT)

01 PKD Montajlı Redüktör
02 Lastik Takoz

Rubber Buffer

01 PKD Mounted Gear Unit
02 Rubber Buffer

Gummipuffer

01 PKD Montiertes Getriebe
02 Gummipuffer

TR GENEL PARÇA LİSTESİ | EN GENERAL PART LIST | DE ALLGEMEINE STUCKLISTE

PKD B 0290 ... H 5290

Aksesuarlar / Accessories / Zubehör

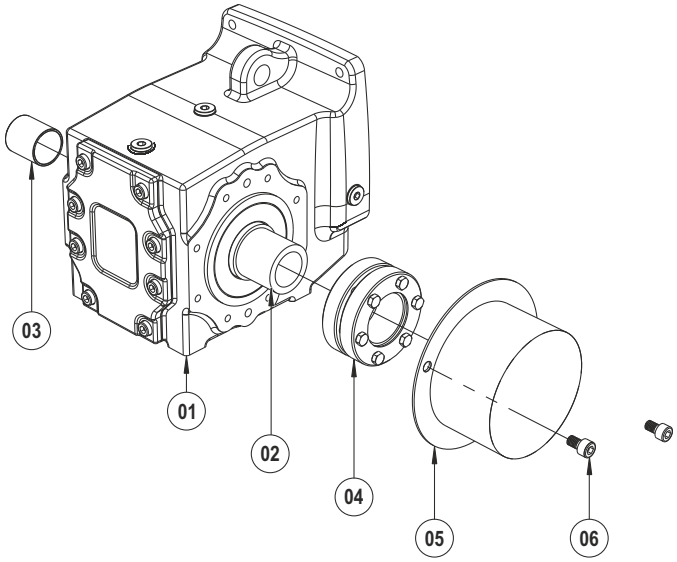

Konik Sıktırma, (KS) Koruma Kapağı (KK)

01 PKD Montajlı Redüktör
02 Konik Sıktırma Şaftı
03 Konik Sıktırma Burcu
04 Konik Sıktırma
05 Konik Sıktırma Koruma Kapağı
06 Cıvata (DIN 912)

Shrink Disk, Protection Cover

01 PKD Mounted Gear Unit
02 Shrink Disk Hollow Shaft
03 Shrink Disk Bushing
04 Shrink Disk
05 Shrink Disk Cover
06 Bolt (DIN 912)

Schrumpfscheibe, Schutzkappe

01 PKD Montiertes Getriebe
02 Schrumpfscheibe Hohlwelle
03 Schrumpfscheibenbuchse
04 Schrumpfscheibe
05 Schrumpfscheibedeckel
06 Verschrauben (DIN 912)

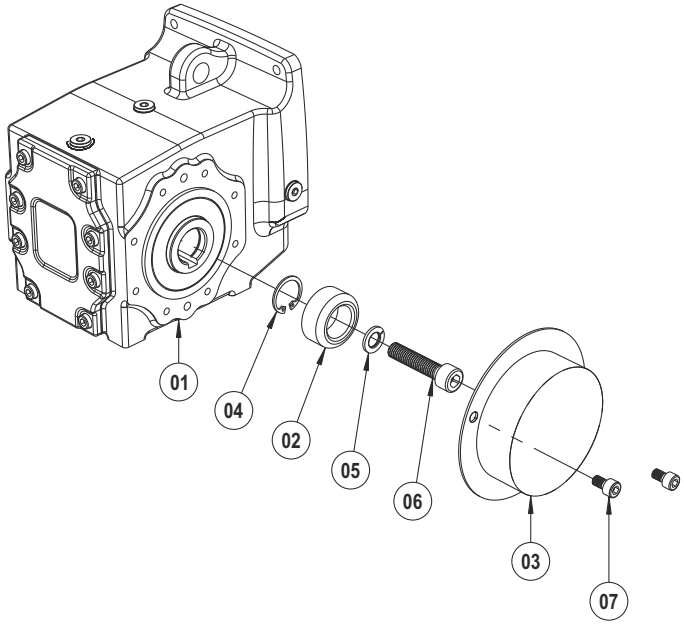

Çektirme, (Ç) Koruma Kapağı (KK)

01 PKD Montajlı Redüktör
02 Çektirme Rondelası
03 Şaft Koruma Kapağı
04 Segman (DIN 472)
05 Rondela (DIN 127)
06 Cıvata (DIN 912)
07 Cıvata (DIN 912)

Puller, Protection Cover

01 PKD Mounted Gear Unit
02 Puller Washer
03 Protection Cover
04 Circlip (DIN 472)
05 Washer (DIN 127)
06 Bolt (DIN 912)
07 Bolt (DIN 912)

Befestigungsbausatz, Schutzkappe

01 PKD Montiertes Getriebe
02 Abziehscheibe
03 Schutzhülle
04 Sicherungsring (DIN 472)
05 Distanzscheibe (DIN 127)
06 Verschrauben (DIN 912)
07 Verschrauben (DIN 912)

TR GENEL PARÇA LİSTESİ | EN GENERAL PART LIST | DE ALLGEMEINE STUCKLISTE

PKD B 0290 ... H 5290

Aksesuarlar / Accessories / Zubehör

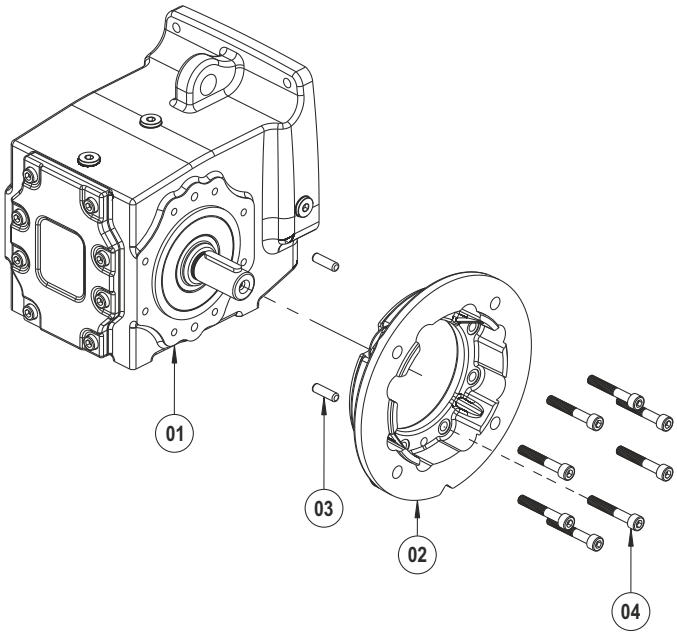

B5 Çıkış Flanşı

01 PKD Montajlı Redüktör
02 B5 Çıkış Flanşı
03 Pim
04 Cıvata (DIN 912)

B5 Output Flange

01 PKD Mounted Gear Unit
02 B5 Output Flange
03 Pin
04 Bolt (DIN 912)

B5 Abtriebsflansch

01 PKD Montiertes Getriebe
02 B5 Abtriebsflansch
03 Bolzen
04 Verschrauben (DIN 912)

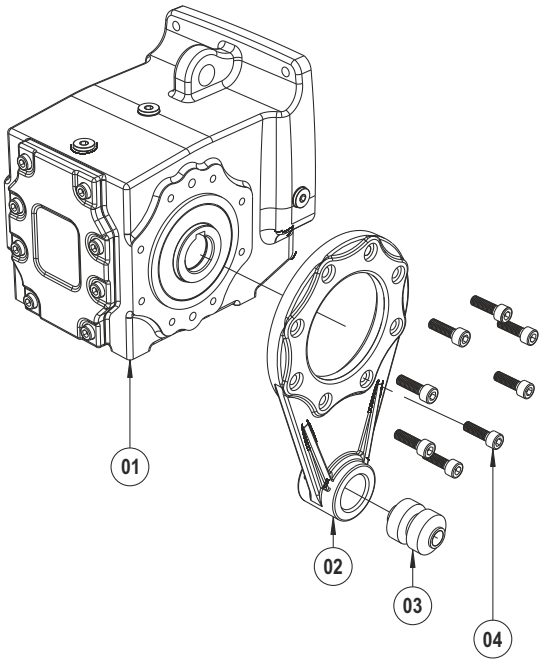

Tork Kolu (TK)

01 PKD Montajlı Redüktör
02 Tork Kolu
03 Lastik Takoz
04 Cıvata (DIN 912)

Torque Arm

01 PKD Mounted Gear Unit
02 Torque Arm
03 Rubber Buffer
04 Bolt (DIN 912)

Drehmomentstütze

01 PKD Montiertes Getriebe
02 Drehmomentstütze
03 Rubber Buffer
04 Verschrauben (DIN 912))

TR GENEL PARÇA LİSTESİ | EN GENERAL PART LIST | DE ALLGEMEINE STUCKLISTE

PKD DG 1390 ... G 9390

Aksesuarlar / Accessories / Zubehör

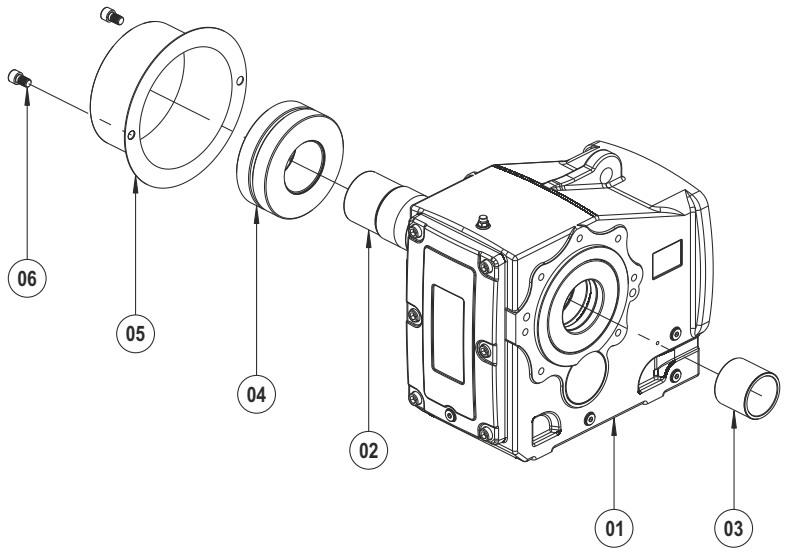

Konik Sıktırma, (KS) Koruma Kapağı (KK)

01 PKD Montajlı Redüktör
02 Konik Sıktırma Şaftı
03 Konik Sıktırma Burcu
04 Konik Sıktırma
05 Konik Sıktırma Koruma Kapağı
06 Cıvata (DIN 912)

Shrink Disk, Protection Cover

01 PKD Mounted Gear Unit
02 Shrink Disk Hollow Shaft
03 Shrink Disk Bushing
04 Shrink Disk
05 Shrink Disk Cover
06 Bolt (DIN 912)

Schrumpfscheibe, Schutzkappe

01 PKD Montiertes Getriebe
02 Schrumpfscheibe Hohlwelle
03 Schrumpfscheibenbuchse
04 Schrumpfscheibe
05 Schrumpfscheibedeckel
06 Verschrauben (DIN 912)

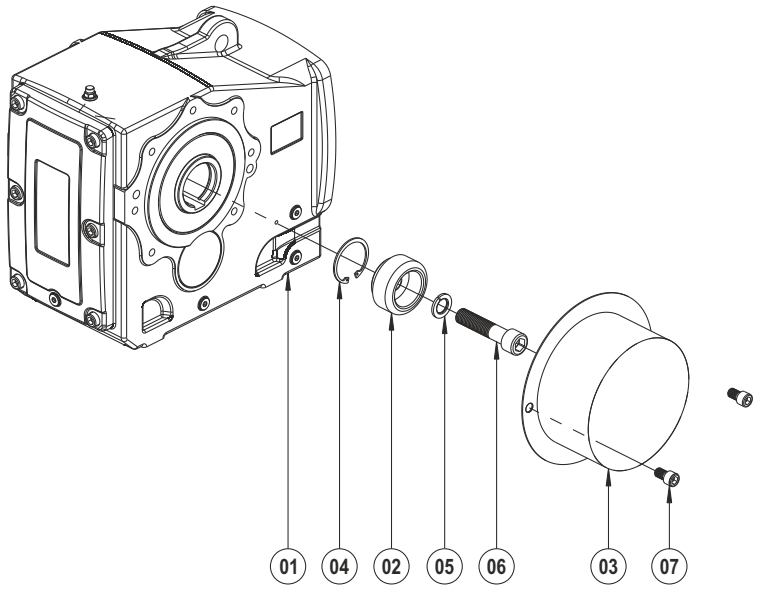

Çektirme, (Ç) Koruma Kapağı (KK)

01 PKD Montajlı Redüktör
02 Çektirme Rondelası
03 Şaft Koruma Kapağı
04 Segman (DIN 472)
05 Rondela (DIN 127)
06 Cıvata (DIN 912)
07 Cıvata (DIN 912)

Puller, Protection Cover

01 PKD Mounted Gear Unit
02 Puller Washer
03 Protection Cover
04 Circlip (DIN 472)
05 Washer (DIN 127)
06 Bolt (DIN 912)
07 Bolt (DIN 912)

Befestigungsbausatz, Schutzkappe

01 PKD Montiertes Getriebe
02 Abziehscheibe
03 Schutzhülle
04 Sicherungsring (DIN 472)
05 Distanzscheibe (DIN 127)
06 Verschrauben (DIN 912)
07 Verschrauben (DIN 912)

TR GENEL PARÇA LİSTESİ | EN GENERAL PART LIST | DE ALLGEMEINE STUCKLISTE

PKD DG 1390 ... G 9390

Aksesuarlar / Accessories / Zubehör

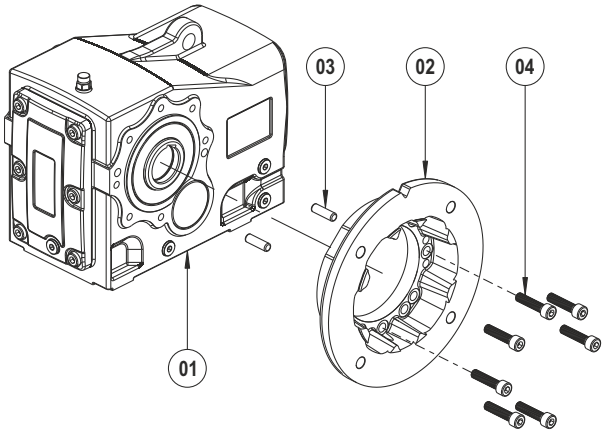

B5 Çıkış Flanşı	B5 Output Flange	B5 Output Flange
01 PKD Montajlı Redüktör	PKD Mounted Gear Unit	PKD Montiertes Getriebe
02 B5 Çıkış Flanşı	B5 Output Flange	B5 Abtriebsflansch
03 Pim	Pin	Bolzen
04 Cıvata (DIN 912)	Bolt (DIN 912)	Verschrauben (DIN 912)

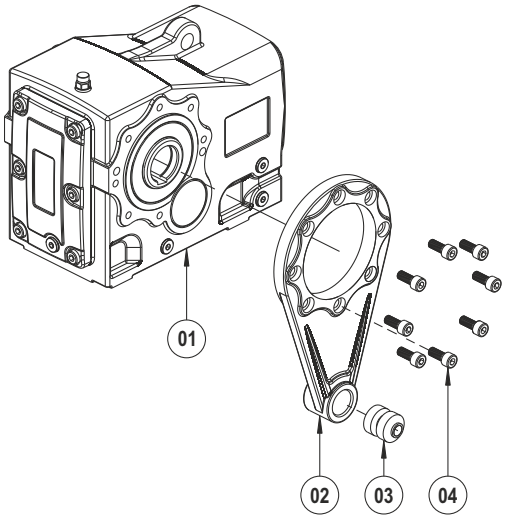

Tork Kolu (TK)	Torque Arm	Drehmomentstütze
01 PKD Montajlı Redüktör	PKD Mounted Gear Unit	PKD Montiertes Getriebe
02 Tork Kolu	Torque Arm	Drehmomentstütze
03 Lastik Takoz	Rubber Buffer	Rubber Buffer
04 Cıvata (DIN 912)	Bolt (DIN 912)	Verschrauben (DIN 912))

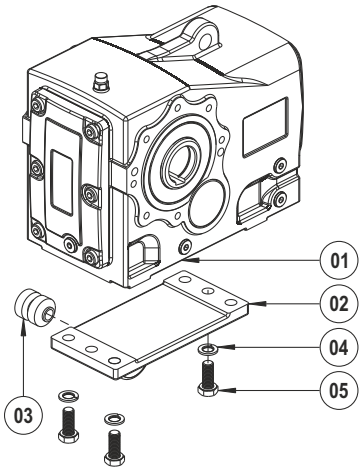

Tork Kolu Platformu (TKP)	Torque Arm Platform	Drehmomentkonsole
01 PKD Montajlı Redüktör	PKD Mounted Gear Unit	PKD Montiertes Getriebe
02 Tork Kolu Platformu	Torque Arm Platform	Drehmomentkonsole
03 Lastik Takoz	Rubber Buffer	Rubber Buffer
04 Rondela (DIN 127)	Washer (DIN 127)	Distanzscheibe (DIN 127)
05 Cıvata (DIN 933)	Bolt (DIN 933)	Verschrauben (DIN 933)

PGR DRIVE TECHNOLOGIES

TR GENEL PARÇA LİSTESİ

EN GENERAL PART LIST

DE ALLGEMEINE STUCKLISTE

IEC 63 ... 112

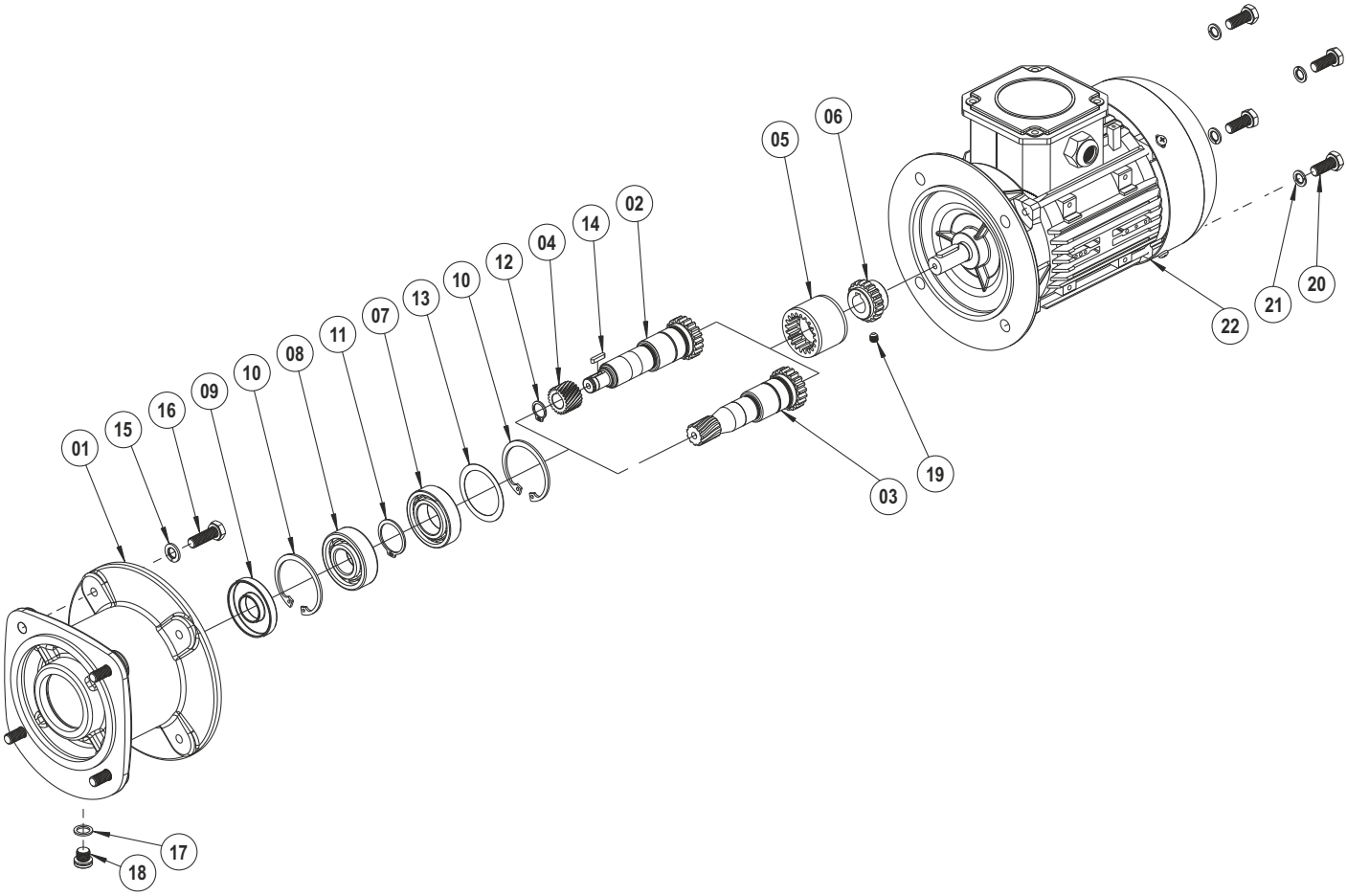

01	Gövde	**01**	Gear Case	**01**	Gehäuse
02	IEC Mili (Kamalı)	**02**	IEC Shaft (With Key)	**02**	IEC Welle (mit Passfeder)
03	IEC Mili (Dişlili)	**03**	IEC Shaft (With Gear)	**03**	IEC Welle (mit Zahnrad)
04	Z1 Dişlisi (Kamalı)	**04**	Driving Pinion (With Key)	**04**	Antriebsritzel (mit Passfeder)
05	Plastik Kaplin	**05**	Plastic Coupling	**05**	Kupplung (Plastik)
06	Metal Kaplin	**06**	Metal Coupling	**06**	Kupplung (Metall)
07	Rulman	**07**	Bearing	**07**	Kugellager
08	Rulman	**08**	Bearing	**08**	Kugellager
09	Yağ Keçesi	**09**	Oil Seal	**09**	Öldichtung
10	Segman (DIN 472)	**10**	Circlip (DIN 472)	**10**	Sicherungsring (DIN 472)
11	Segman (DIN 471)	**11**	Circlip (DIN 471)	**11**	Sicherungsring (DIN 471)
12	Segman (DIN 471)	**12**	Circlip (DIN 471)	**12**	Sicherungsring (DIN 471)
13	Layner	**13**	Shim	**13**	Passscheibe
14	Kama	**14**	Key	**14**	Passfeder
15	Rondela (DIN 127)	**15**	Washer (DIN 127)	**15**	Distanzscheibe (DIN 127)
16	Cıvata (DIN 933)	**16**	Bolt (DIN 933)	**16**	Verschrauben (DIN 933)
17	Rondela (DIN 7603)	**17**	Washer (DIN 7603)	**17**	Distanzscheibe (DIN 7603)
18	Yağ Tapası	**18**	Oil Plug	**18**	Ölstöpsel
19	Cıvata (DIN 916)	**19**	Bolt (DIN 916)	**19**	Verschrauben (DIN 916)
20	Cıvata (DIN 933)	**20**	Bolt (DIN 933)	**20**	Verschrauben (DIN 933)
21	Rondela (DIN 127)	**21**	Washer (DIN 127)	**21**	Distanzscheibe (DIN 127)
22	Motor	**22**	Motor	**22**	Motor

TR GENEL PARÇA LİSTESİ | EN GENERAL PART LIST | DE ALLGEMEINE STUCKLISTE

IEC 63 ... 132

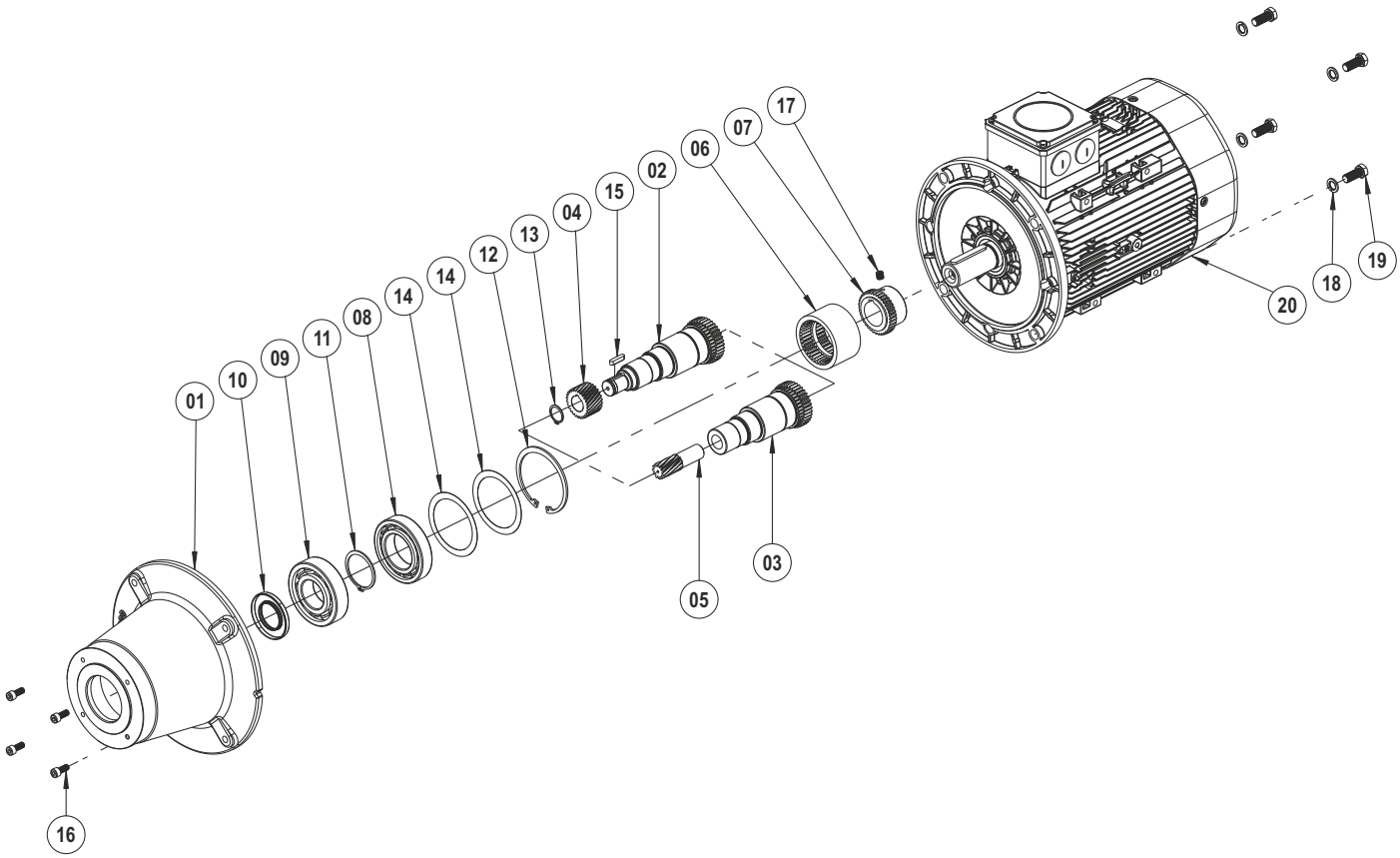

	TR	EN	DE
01	Gövde	Gear Case	Gehäuse
02	IEC Mili (Kamalı)	IEC Shaft (With Key)	IEC Welle (mit Passfeder)
03	IEC Mili	IEC Shaft	IEC Welle
04	Z1 Dişlisi (Kamalı)	Driving Pinion (With Key)	Antriebsritzel (mit Passfeder)
05	Z1 Dişlisi	Driving Pinion	Antriebsritzel
06	Plastik Kaplin	Plastic Coupling	Kupplung (Plastik)
07	Metal Kaplin	Metal Coupling	Kupplung (Metall)
08	Rulman	Bearing	Kugellager
09	Rulman	Bearing	Kugellager
10	Yağ Keçesi	Oil Seal	Öldichtung
11	Segman (DIN 471)	Circlip (DIN 471)	Sicherungsring (DIN 471)
12	Segman (DIN 472)	Circlip (DIN 472)	Sicherungsring (DIN 472)
13	Segman (DIN 471)	Circlip (DIN 471)	Sicherungsring (DIN 471)
14	Layner	Shim	Passscheibe
15	Kama	Key	Passfeder
16	Cıvata (DIN 912)	Bolt (DIN 912)	Verschrauben (DIN 912)
17	Cıvata (DIN 916)	Bolt (DIN 916)	Verschrauben (DIN 916)
18	Rondela (DIN 127)	Washer (DIN 127)	Distanzscheibe (DIN 127)
19	Cıvata (DIN 933)	Bolt (DIN 933)	Verschrauben (DIN 933)
20	Motor	Motor	Motor

TR GENEL PARÇA LİSTESİ | EN GENERAL PART LIST | DE ALLGEMEINE STUCKLISTE

IEC 63 ... 180

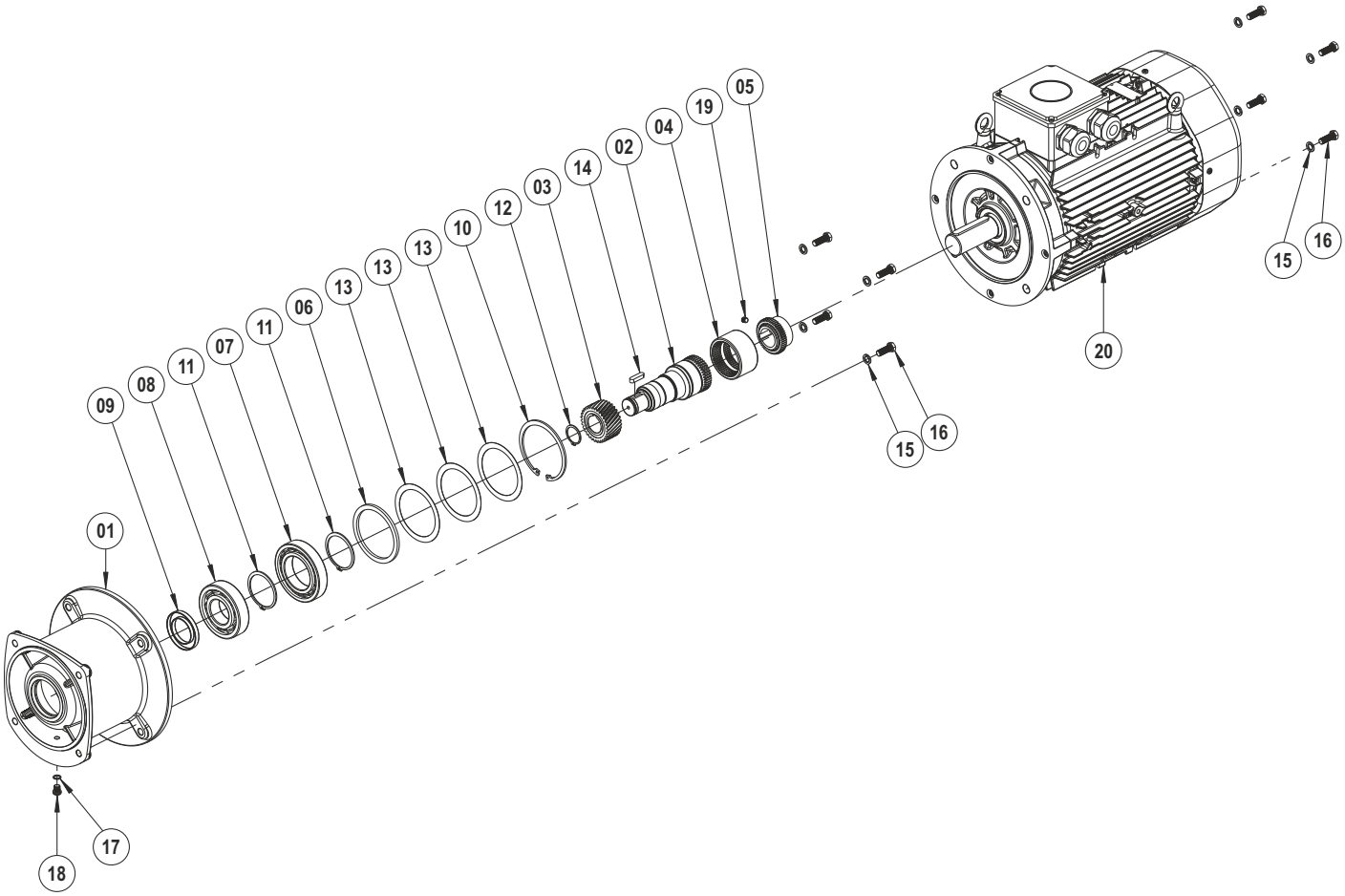

01	Gövde	**01**	Gear Case	**01**	Gehäuse
02	IEC Mili (Kamalı)	**02**	IEC Shaft (With Key)	**02**	IEC Welle (mit Passfeder)
03	Z1 Dişlisi (Kamalı)	**03**	Driving Pinion (With Key)	**03**	Antriebsritzel (mit Passfeder)
04	Plastik Kaplin	**04**	Plastic Coupling	**04**	Kupplung (Plastik)
05	Metal Kaplin	**05**	Metal Coupling	**05**	Kupplung (Metall)
06	Rondela	**06**	Washer	**06**	Distanzscheibe
07	Rulman	**07**	Bearing	**07**	Kugellager
08	Rulman	**08**	Bearing	**08**	Kugellager
09	Yağ Keçesi	**09**	Oil Seal	**09**	Öldichtung
10	Segman (DIN 472)	**10**	Circlip (DIN 472)	**10**	Sicherungsring (DIN 472)
11	Segman (DIN 471)	**11**	Circlip (DIN 471)	**11**	Sicherungsring (DIN 471)
12	Segman (DIN 471)	**12**	Circlip (DIN 471)	**12**	Sicherungsring (DIN 471)
13	Layner	**13**	Shim	**13**	Passscheibe
14	Kama	**14**	Key	**14**	Passfeder
15	Rondela (DIN 127)	**15**	Washer (DIN 127)	**15**	Distanzscheibe (DIN 127)
16	Cıvata (DIN 933)	**16**	Bolt (DIN 933)	**16**	Verschrauben (DIN 933)
17	Rondela (DIN 7603)	**17**	Washer (DIN 7603)	**17**	Distanzscheibe (DIN 7603)
18	Yağ Tapası	**18**	Oil Plug	**18**	Ölstöpsel
19	Cıvata (DIN 916)	**19**	Bolt (DIN 916)	**19**	Verschrauben (DIN 912)
20	Motor	**20**	Motor	**20**	Motor

TR GENEL PARÇA LİSTESİ

EN GENERAL PART LIST

DE ALLGEMEINE STUCKLISTE

IEC 132 ... 180

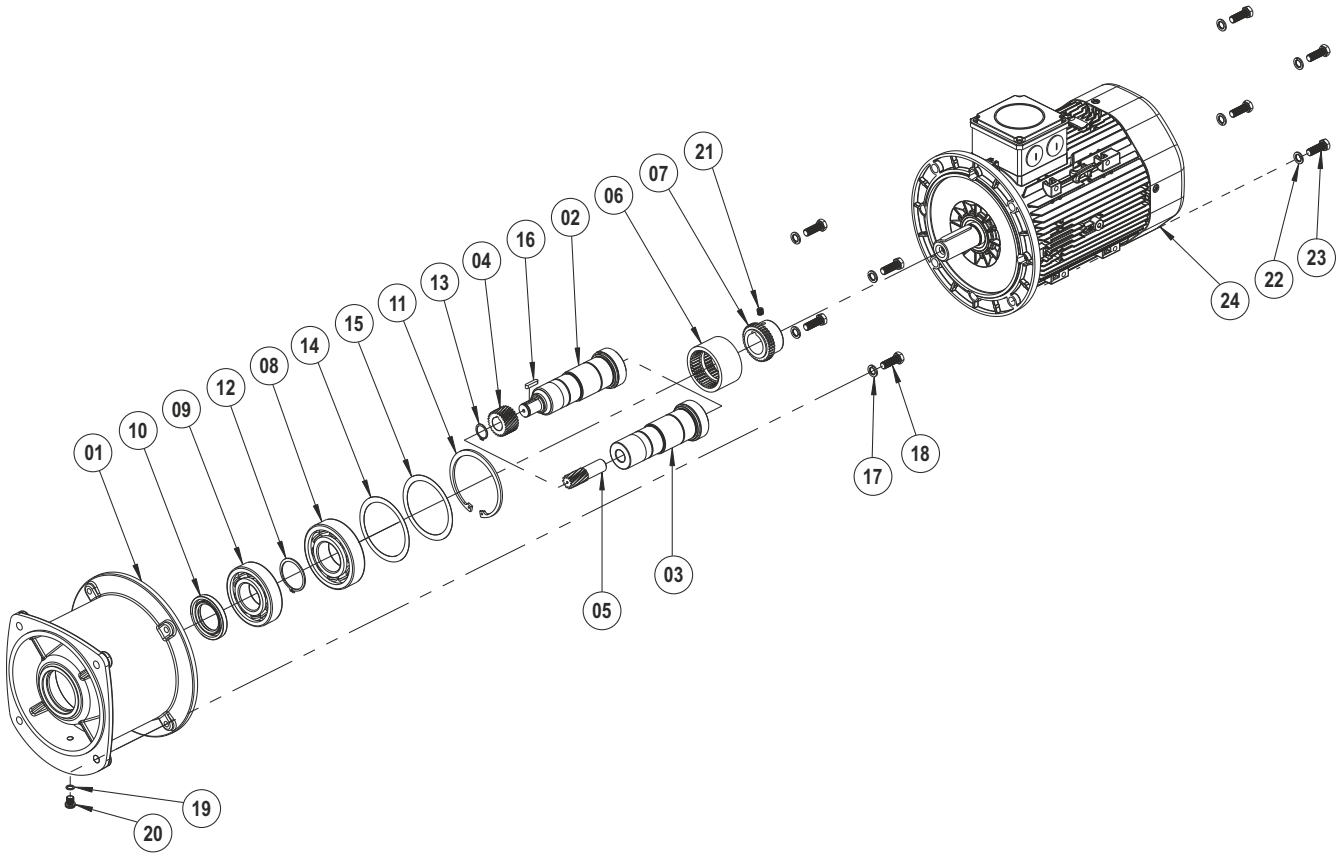

	TR	EN	DE
01	Gövde	Gear Case	Gehäuse
02	IEC Mili (Kamalı)	IEC Shaft (With Key)	IEC Welle (mit Passfeder)
03	IEC Mili	IEC Shaft	IEC Welle
04	Z1 Dişlisi (Kamalı)	Driving Pinion (With Key)	Antriebsritzel (mit Passfeder)
05	Z1 Dişlisi	Driving Pinion	Antriebsritzel
06	Plastik Kaplin	Plastic Coupling	Kupplung (Plastik)
07	Metal Kaplin	Metal Coupling	Kupplung (Metall)
08	Rulman	Bearing	Kugellager
09	Rulman	Bearing	Kugellager
10	Yağ Keçesi	Oil Seal	Öldichtung
11	Segman (DIN 472)	Circlip (DIN 472)	Sicherungsring (DIN 472)
12	Segman (DIN 471)	Circlip (DIN 471)	Sicherungsring (DIN 471)
13	Segman (DIN 471)	Circlip (DIN 471)	Sicherungsring (DIN 471)
14	Layner	Shim	Passscheibe
15	Layner	Shim	Passscheibe
16	Kama	Key	Passfeder
17	Rondela (DIN 127)	Washer (DIN 127)	Distanzscheibe (DIN 127)
18	Cıvata (DIN 933)	Bolt (DIN 933)	Verschrauben (DIN 933)
19	Rondela (DIN 7603)	Washer (DIN 7603)	Distanzscheibe (DIN 7603)
20	Yağ Tapası	Oil Plug	Ölstöpsel
21	Cıvata (DIN 916)	Bolt (DIN 916)	Verschrauben (DIN 916)
22	Rondela (DIN 127)	Washer (DIN 127)	Distanzscheibe (DIN 127)
23	Cıvata (DIN 933)	Bolt (DIN 933)	Verschrauben (DIN 933)
24	Motor	Motor	Motor

TR GENEL PARÇA LİSTESİ

EN GENERAL PART LIST

DE ALLGEMEINE STUCKLISTE

IEC 160 ... 315

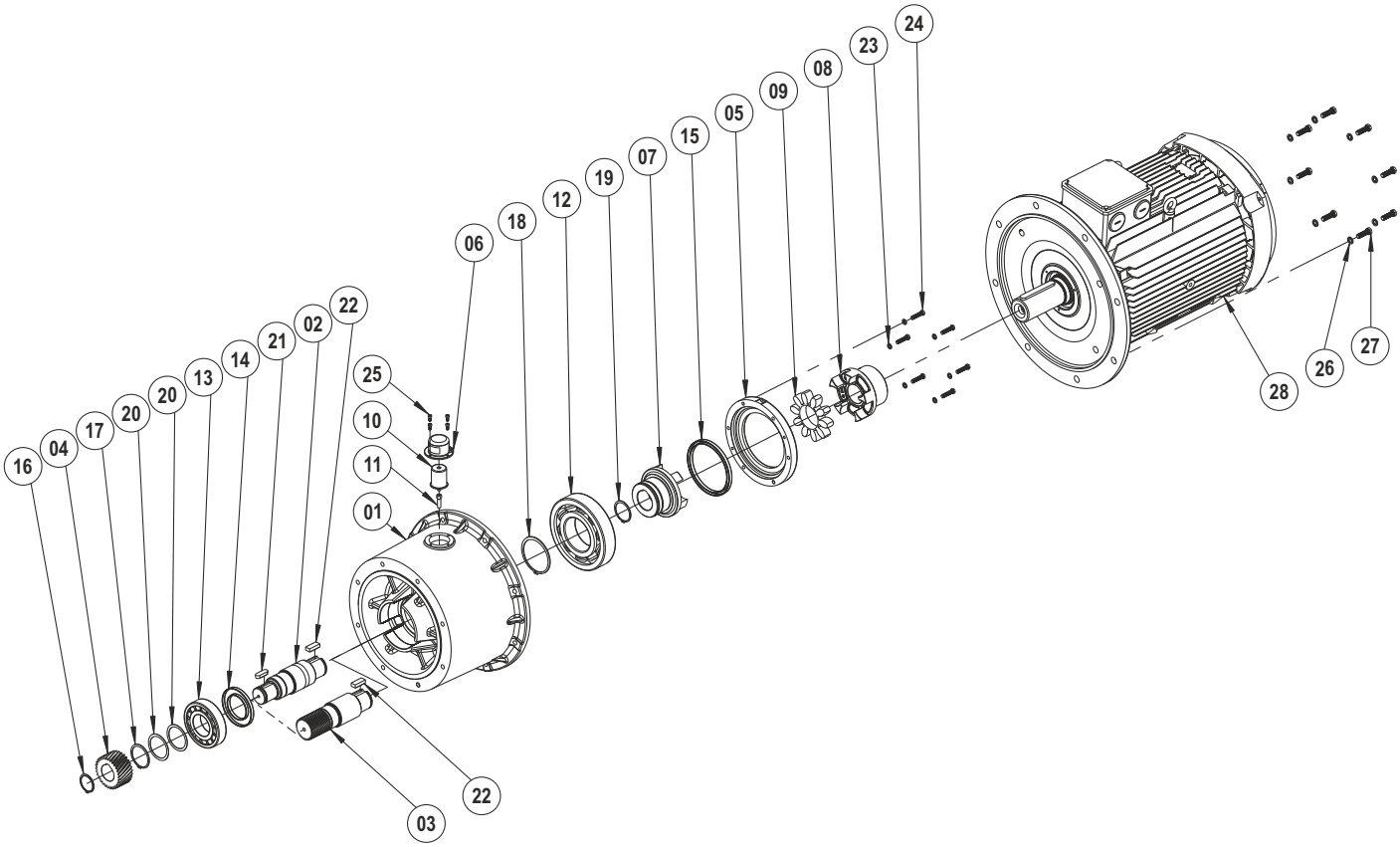

01	Gövde	**01**	Gear Case	**01**	Gehäuse
02	IEC Mili (Kamalı)	**02**	IEC Shaft (With Key)	**02**	IEC Welle (mit Passfeder)
03	IEC Mili (Dişlili)	**03**	IEC Shaft (With Gear)	**03**	IEC Welle (mit Zahnrad)
04	Z1 Dişlisi (Kamalı)	**04**	Driving Pinion (With Key)	**04**	Antriebsritzel (mit Passfeder)
05	Rulman Flanşı	**05**	Bearing Flange	**05**	Lagerflansch
06	Yağlama Kapağı	**06**	Lubrication Cover	**06**	Schmierdeckel
07	Kaplin (Redüktör Tarafı)	**07**	Coupling (Gearbox Side)	**07**	Kupplung (Getriebeseite)
08	Kaplin (Motor Tarafı)	**08**	Coupling (Motor Side)	**08**	Kupplung (Motorseite)
09	Spider	**09**	Spider	**09**	Spider
10	Otomatik Yağlayıcı Tüpü	**10**	Automatic Lubricator	**10**	Automatischer Schmierstoffgeber
11	Otomatik Yağlayıcı Adaptörü	**11**	Automatic Lubricator Adapter	**11**	Automatischer Schmierstoffgeber Verlängerung
12	Rulman	**12**	Bearing	**12**	Kugellager
13	Rulman	**13**	Bearing	**13**	Kugellager
14	Yağ Keçesi	**14**	Oil Seal	**14**	Öldichtung
15	Yağ Keçesi	**15**	Oil Seal	**15**	Öldichtung
16	Segman (DIN 471)	**16**	Circlip (DIN 471)	**16**	Sicherungsring (DIN 471)
17	Segman (DIN 471)	**17**	Circlip (DIN 471)	**17**	Sicherungsring (DIN 471)
18	Segman (DIN 471)	**18**	Circlip (DIN 471)	**18**	Sicherungsring (DIN 471)
19	Segman (DIN 471)	**19**	Circlip (DIN 471)	**19**	Sicherungsring (DIN 471)
20	Layner	**20**	Shim	**20**	Passscheibe
21	Kama	**21**	Key	**21**	Passfeder
22	Kama	**22**	Key	**22**	Passfeder
23	Rondela (DIN 127)	**23**	Washer (DIN 127)	**23**	Distanzscheibe (DIN 127)
24	Cıvata (DIN 933)	**24**	Bolt (DIN 933)	**24**	Verschrauben (DIN 933)
25	Cıvata (DIN 912)	**25**	Bolt (DIN 912)	**25**	Verschrauben (DIN 912)
26	Rondela (DIN 127)	**26**	Washer (DIN 127)	**26**	Distanzscheibe (DIN 127)
27	Cıvata (DIN 933)	**27**	Bolt (DIN 933)	**27**	Verschrauben (DIN 933)
28	Motor	**28**	Motor	**28**	Motor

TR GENEL PARÇA LİSTESİ | EN GENERAL PART LIST | DE ALLGEMEINE STUCKLISTE

PAM B5 / 63 ... 315

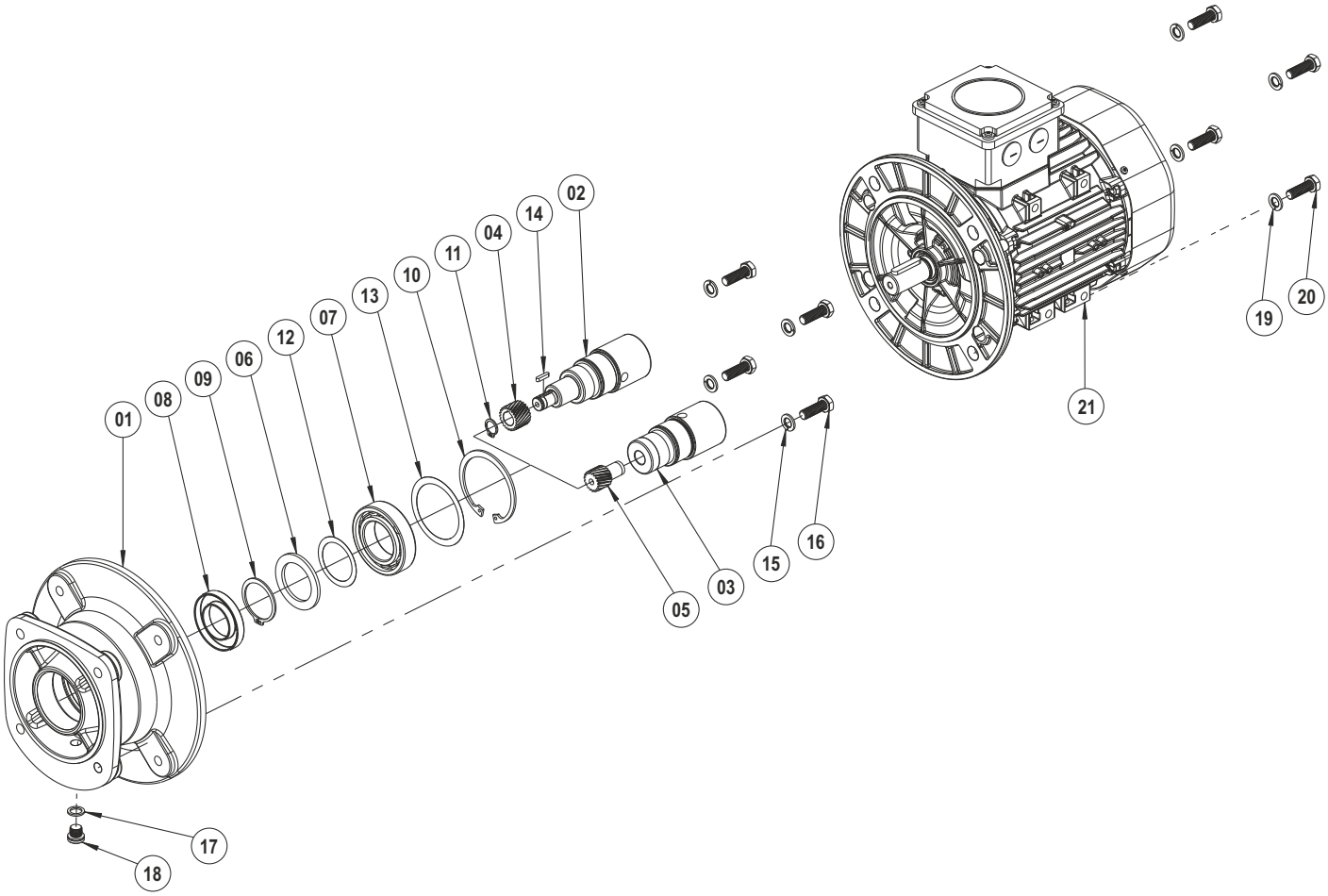

01	Gövde	**01**	Gear Case	**01**	Gehäuse
02	PAM Mili (Kamalı)	**02**	PAM Shaft (With Key)	**02**	PAM Welle (mit Passfeder)
03	PAM Mili	**03**	PAM Shaft	**03**	PAM Welle
04	Z1 Dişlisi (Kamalı)	**04**	Driving Pinion (With Key)	**04**	Antriebsritzel (mit Passfeder)
05	Z1 Dişlisi	**05**	Driving Pinion	**05**	Antriebsritzel
06	Rondela	**06**	Washer	**06**	Distanzscheibe
07	Rulman	**07**	Bearing	**07**	Kugellager
08	Yağ Keçesi	**08**	Oil Seal	**08**	Öldichtung
09	Segman (DIN 471)	**09**	Circlip (DIN 471)	**09**	Sicherungsring (DIN 471)
10	Segman (DIN 472)	**10**	Circlip (DIN 472)	**10**	Sicherungsring (DIN 472)
11	Segman (DIN 471)	**11**	Circlip (DIN 471)	**11**	Sicherungsring (DIN 471)
12	Layner	**12**	Shim	**12**	Passscheibe
13	Layner	**13**	Shim	**13**	Passscheibe
14	Kama	**14**	Key	**14**	Passfeder
15	Rondela (DIN 127)	**15**	Washer (DIN 127)	**15**	Distanzscheibe (DIN 127)
16	Cıvata (DIN 933)	**16**	Bolt (DIN 933)	**16**	Verschrauben (DIN 933)
17	Rondela (DIN 7603)	**17**	Washer (DIN 7603)	**17**	Distanzscheibe (DIN 7603)
18	Yağ Tapası	**18**	Oil Plug	**18**	Ölstöpsel
19	Rondela (DIN 127)	**19**	Washer (DIN 127)	**19**	Distanzscheibe (DIN 127)
20	Cıvata (DIN 933)	**20**	Bolt (DIN 933)	**20**	Verschrauben (DIN 933)
21	Motor	**21**	Motor	**21**	Motor

TR GENEL PARÇA LİSTESİ | EN GENERAL PART LIST | DE ALLGEMEINE STUCKLISTE

PAM B14 / 63 ... 132

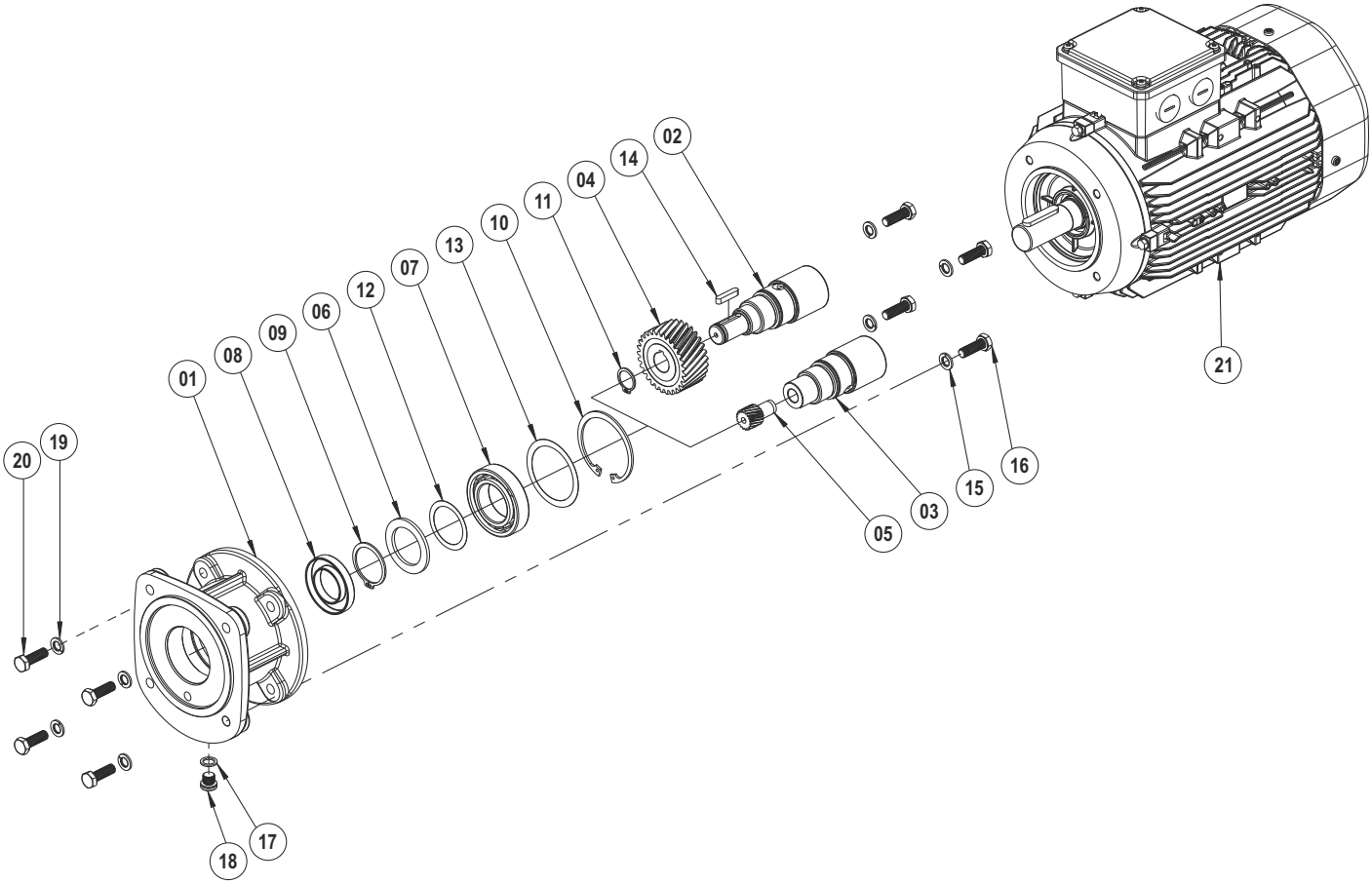

01	Gövde	**01**	Gear Case	**01**	Gehäuse
02	PAM Mili (Kamalı)	**02**	PAM Shaft (With Key)	**02**	PAM Welle (mit Passfeder)
03	PAM Mili	**03**	PAM Shaft	**03**	PAM Welle
04	Z1 Dişlisi (Kamalı)	**04**	Driving Pinion (With Key)	**04**	Antriebsritzel (mit Passfeder)
05	Z1 Dişlisi	**05**	Driving Pinion	**05**	Antriebsritzel
06	Rondela	**06**	Washer	**06**	Distanzscheibe
07	Rulman	**07**	Bearing	**07**	Kugellager
08	Yağ Keçesi	**08**	Oil Seal	**08**	Öldichtung
09	Segman (DIN 471)	**09**	Circlip (DIN 471)	**09**	Sicherungsring (DIN 471)
10	Segman (DIN 472)	**10**	Circlip (DIN 472)	**10**	Sicherungsring (DIN 472)
11	Segman (DIN 471)	**11**	Circlip (DIN 471)	**11**	Sicherungsring (DIN 471)
12	Layner	**12**	Shim	**12**	Passscheibe
13	Layner	**13**	Shim	**13**	Passscheibe
14	Kama	**14**	Key	**14**	Passfeder
15	Rondela (DIN 127)	**15**	Washer (DIN 127)	**15**	Distanzscheibe (DIN 127)
16	Cıvata (DIN 933)	**16**	Bolt (DIN 933)	**16**	Verschrauben (DIN 933)
17	Rondela (DIN 7603)	**17**	Washer (DIN 7603)	**17**	Distanzscheibe (DIN 7603)
18	Yağ Tapası	**18**	Oil Plug	**18**	Ölstöpsel
19	Rondela (DIN 127)	**19**	Washer (DIN 127)	**19**	Distanzscheibe (DIN 127)
20	Cıvata (DIN 933)	**20**	Bolt (DIN 933)	**20**	Verschrauben (DIN 933)
21	Motor	**21**	Motor	**21**	Motor

TR GENEL PARÇA LİSTESİ | EN GENERAL PART LIST | DE ALLGEMEINE STUCKLISTE

W 109

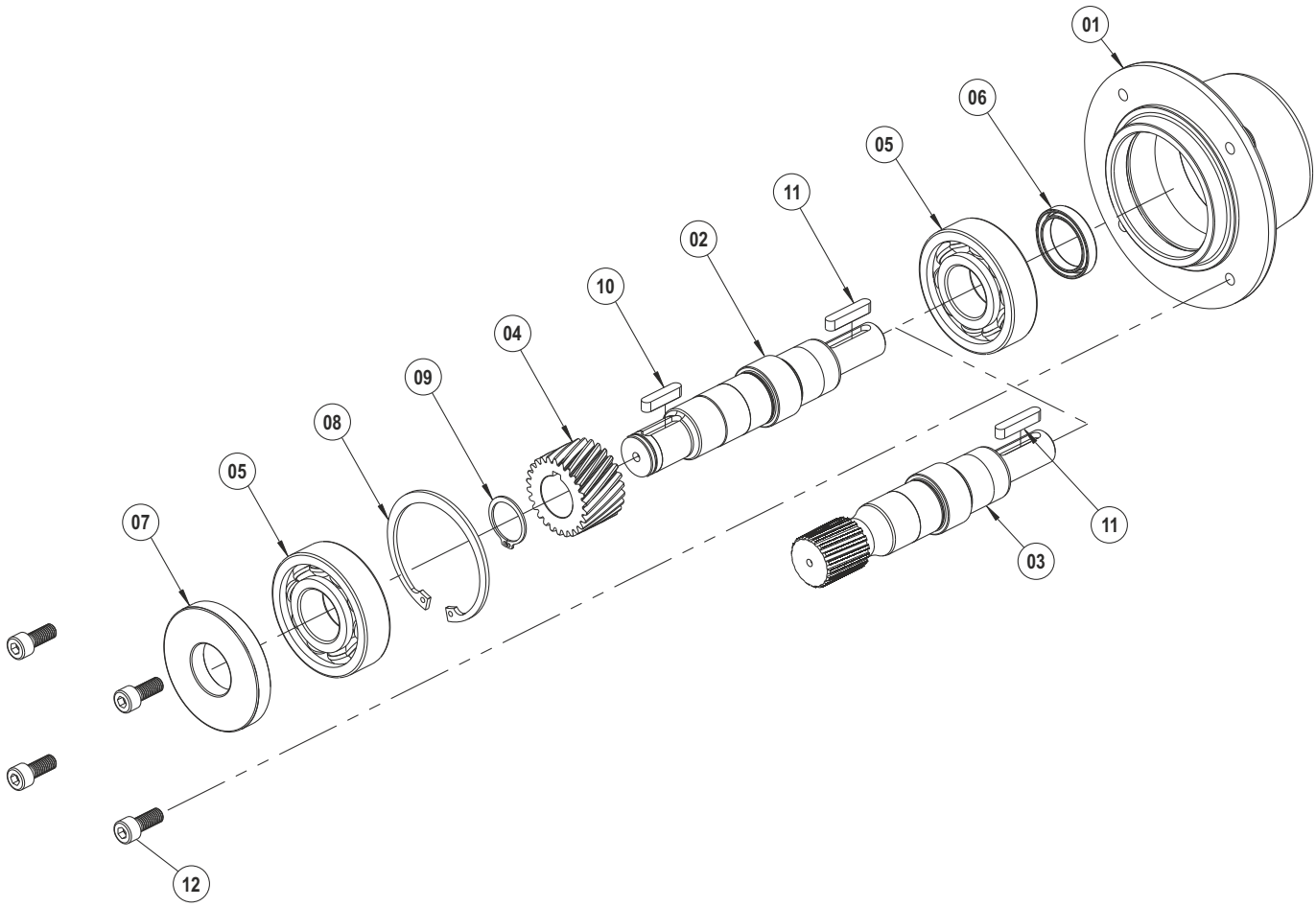

01	Gövde	01	Gear Case	01	Gehäuse
02	W Mili (Kamalı)	02	W Shaft (With Key)	02	W Welle (mit Passfeder)
03	W Mili (Dişlili)	03	W Shaft (With Gear)	03	W Welle (mit Zahnrad)
04	Z1 Dişlisi	04	Driving Pinion	04	Antriebsritzel
05	Rulman	05	Bearing	05	Kugellager
06	Yağ Keçesi	06	Oil Seal	06	Öldichtung
07	Yağ Keçesi	07	Oil Seal	07	Öldichtung
08	Segman (DIN 472)	08	Circlip (DIN 472)	08	Sicherungsring (DIN 472)
09	Segman (DIN 471)	09	Circlip (DIN 471)	09	Sicherungsring (DIN 471)
10	Kama	10	Key	10	Passfeder
11	Kama	11	Key	11	Passfeder
12	Cıvata (DIN 912)	12	Bolt (DIN 912)	12	Verschrauben (DIN 912)

PGR DRIVE TECHNOLOGIES

TR GENEL PARÇA LİSTESİ | EN GENERAL PART LIST | DE ALLGEMEINE STUCKLISTE

W 122 - 172 - 213

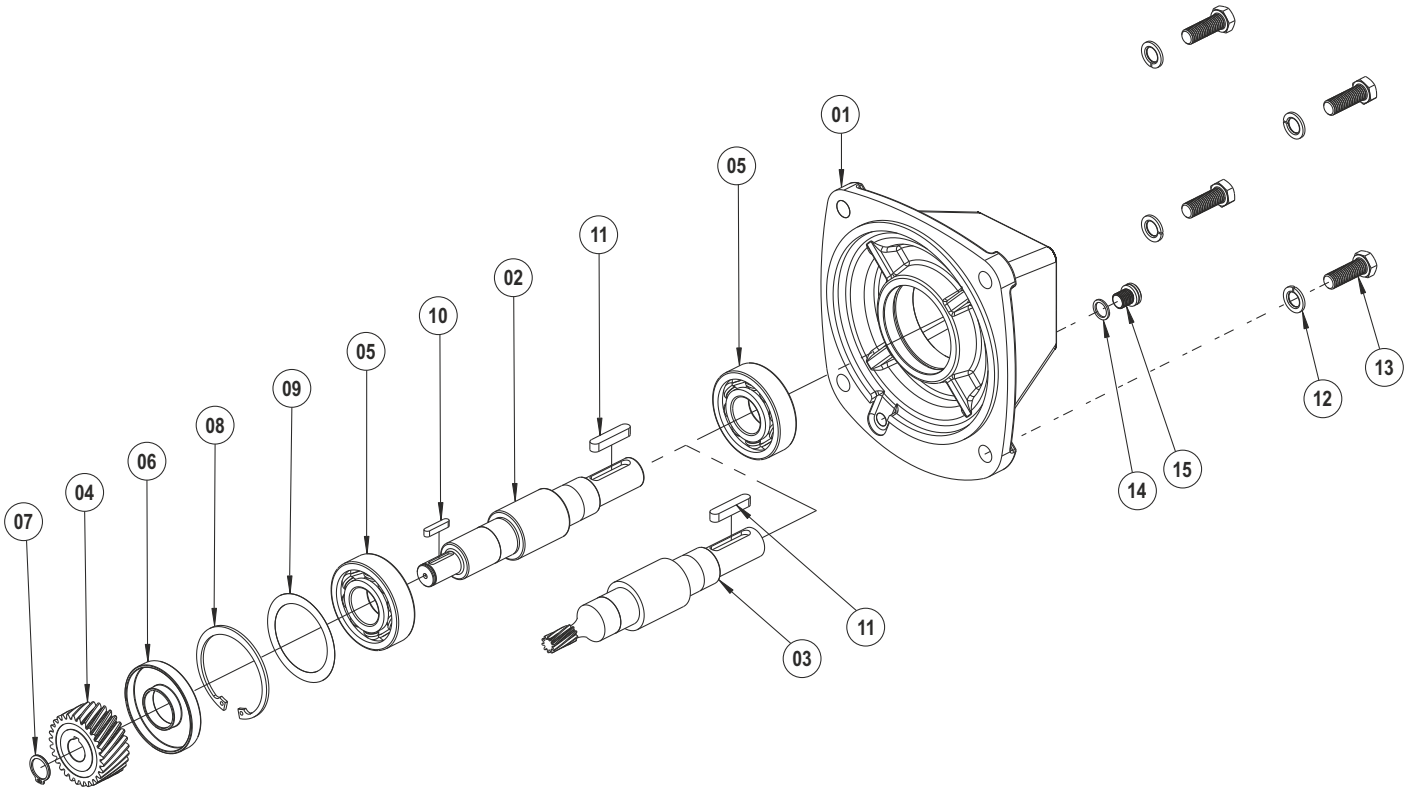

01	Gövde	**01**	Gear Case	**01**	Gehäuse
02	W Mili (Kamalı)	**02**	W Shaft (With Key)	**02**	W Welle (mit Passfeder)
03	W Mili (Dişlili)	**03**	W Shaft (With Gear)	**03**	W Welle (mit Zahnrad)
04	Z1 Dişlisi (Kamalı)	**04**	Driving Pinion (With Key)	**04**	Antriebsritzel (mit Passfeder)
05	Rulman	**05**	Bearing	**05**	Kugellager
06	Yağ Keçesi	**06**	Oil Seal	**06**	Öldichtung
07	Segman (DIN 471)	**07**	Circlip (DIN 471)	**07**	Sicherungsring (DIN 471)
08	Segman (DIN 472)	**08**	Circlip (DIN 472)	**08**	Sicherungsring (DIN 472)
09	Layner	**09**	Shim	**09**	Passscheibe
10	Kama	**10**	Key	**10**	Passfeder
11	Kama	**11**	Key	**11**	Passfeder
12	Rondela (DIN 127)	**12**	Washer (DIN 127)	**12**	Distanzscheibe (DIN 127)
13	Cıvata (DIN 933)	**13**	Bolt (DIN 933)	**13**	Verschrauben (DIN 933)
14	Rondela (DIN 7603)	**14**	Washer (DIN 7603)	**14**	Distanzscheibe (DIN 7603)
15	Yağ Tapası	**15**	Oil Plug	**15**	Ölstöpsel

TR GENEL PARÇA LİSTESİ | EN GENERAL PART LIST | DE ALLGEMEINE STUCKLISTE

W 253

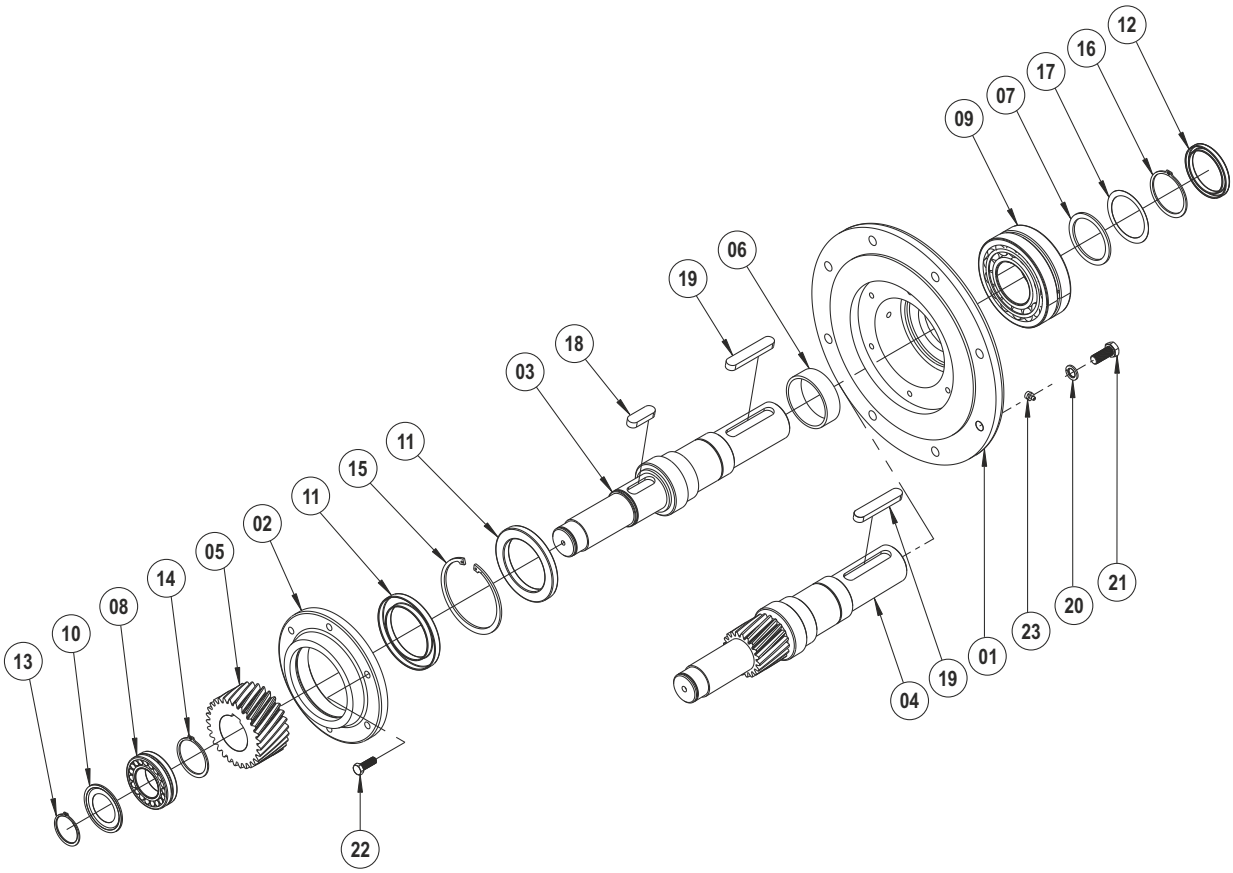

01	Gövde	**01**	Gear Case	**01**	Gehäuse
02	Rulman Kapağı	**02**	Bearing Cover	**02**	Lagerdeckel
03	W Mili (Kamalı)	**03**	W Shaft (With Key)	**03**	W Welle (mit Passfeder)
04	W Mili (Dişlili)	**04**	W Shaft (With Gear)	**04**	W Welle (mit Zahnrad)
05	Z1 Dişlisi (Kamalı)	**05**	Driving Pinion (With Key)	**05**	Antriebsritzel (mit Passfeder)
06	Burç	**06**	Spacer	**06**	Distanzbuchse
07	Rondela	**07**	Washer	**07**	Distanzscheibe
08	Rulman	**08**	Bearing	**08**	Kugellager
09	Rulman	**09**	Bearing	**09**	Kugellager
10	Nilos-Ring	**10**	Nilos-Ring	**10**	Nilos-Ring
11	Yağ Keçesi	**11**	Oil Seal	**11**	Öldichtung
12	Yağ Keçesi	**12**	Oil Seal	**12**	Öldichtung
13	Segman (DIN 471)	**13**	Circlip (DIN 471)	**13**	Sicherungsring (DIN 471)
14	Segman (DIN 471)	**14**	Circlip (DIN 471)	**14**	Sicherungsring (DIN 471)
15	Segman (DIN 472)	**15**	Circlip (DIN 472)	**15**	Sicherungsring (DIN 472)
16	Segman (DIN 471)	**16**	Circlip (DIN 471)	**16**	Sicherungsring (DIN 471)
17	Layner	**17**	Shim	**17**	Passscheibe
18	Kama	**18**	Key	**18**	Passfeder
19	Kama	**19**	Key	**19**	Passfeder
20	Rondela (DIN 127)	**20**	Washer (DIN 127)	**20**	Distanzscheibe (DIN 127)
21	Cıvata (DIN 933)	**21**	Bolt (DIN 933)	**21**	Verschrauben (DIN 933)
22	Cıvata (DIN 933)	**22**	Bolt (DIN 933)	**22**	Verschrauben (DIN 933)
23	Gresörlük	**23**	Grease Nipple	**23**	Schmiernippel

PGR DRIVE TECHNOLOGIES

TR GENEL PARÇA LİSTESİ | EN GENERAL PART LIST | DE ALLGEMEINE STUCKLISTE

W 288

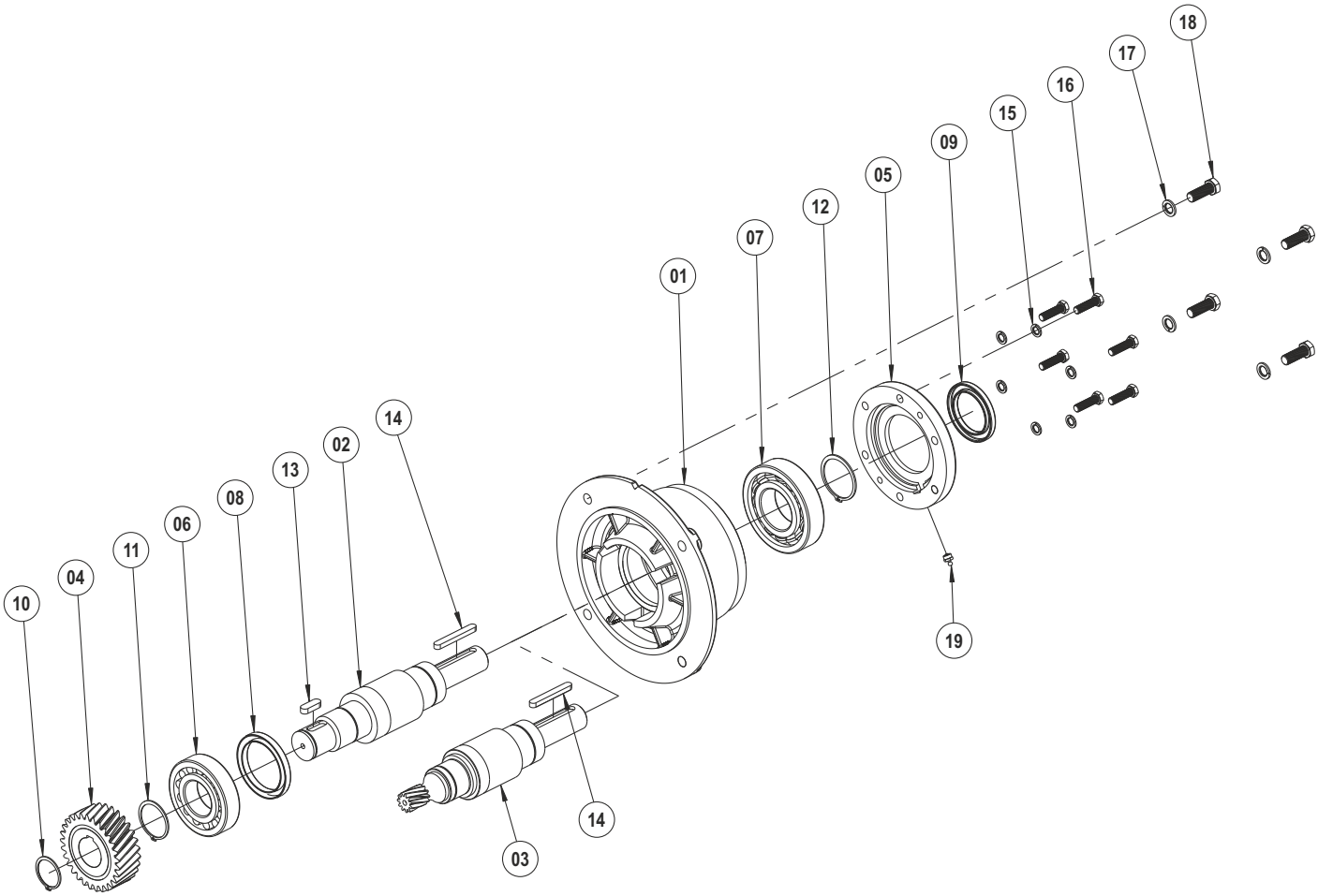

01	Gövde	**01**	Gear Case	**01**	Gehäuse
02	W Mili (Kamalı)	**02**	W Shaft (With Key)	**02**	W Welle (mit Passfeder)
03	W Mili (Dişlili)	**03**	W Shaft (With Gear)	**03**	W Welle (mit Zahnrad)
04	Z1 Dişlisi (Kamalı)	**04**	Driving Pinion (With Key)	**04**	Antriebsritzel (mit Passfeder)
05	Rulman Flanşı	**05**	Bearing Flange	**05**	Lagerflansch
06	Rulman	**06**	Bearing	**06**	Kugellager
07	Rulman	**07**	Bearing	**07**	Kugellager
08	Yağ Keçesi	**08**	Oil Seal	**08**	Öldichtung
09	Yağ Keçesi	**09**	Oil Seal	**09**	Öldichtung
10	Segman (DIN 471)	**10**	Circlip (DIN 471)	**10**	Sicherungsring (DIN 471)
11	Segman (DIN 471)	**11**	Circlip (DIN 471)	**11**	Sicherungsring (DIN 471)
12	Segman (DIN 471)	**12**	Circlip (DIN 471)	**12**	Sicherungsring (DIN 471)
13	Kama	**13**	Key	**13**	Passfeder
14	Kama	**14**	Key	**14**	Passfeder
15	Rondela (DIN 127)	**15**	Washer (DIN 127)	**15**	Distanzscheibe (DIN 127)
16	Cıvata (DIN 933)	**16**	Bolt (DIN 933)	**16**	Verschrauben (DIN 933)
17	Rondela (DIN 127)	**17**	Washer (DIN 127)	**17**	Distanzscheibe (DIN 127)
18	Cıvata (DIN 933)	**18**	Bolt (DIN 933)	**18**	Verschrauben (DIN 933)
19	Gresörlük	**19**	Grease Nipple	**19**	Schmiernippel

TR GENEL PARÇA LİSTESİ | EN GENERAL PART LIST | DE ALLGEMEINE STUCKLISTE

W 397

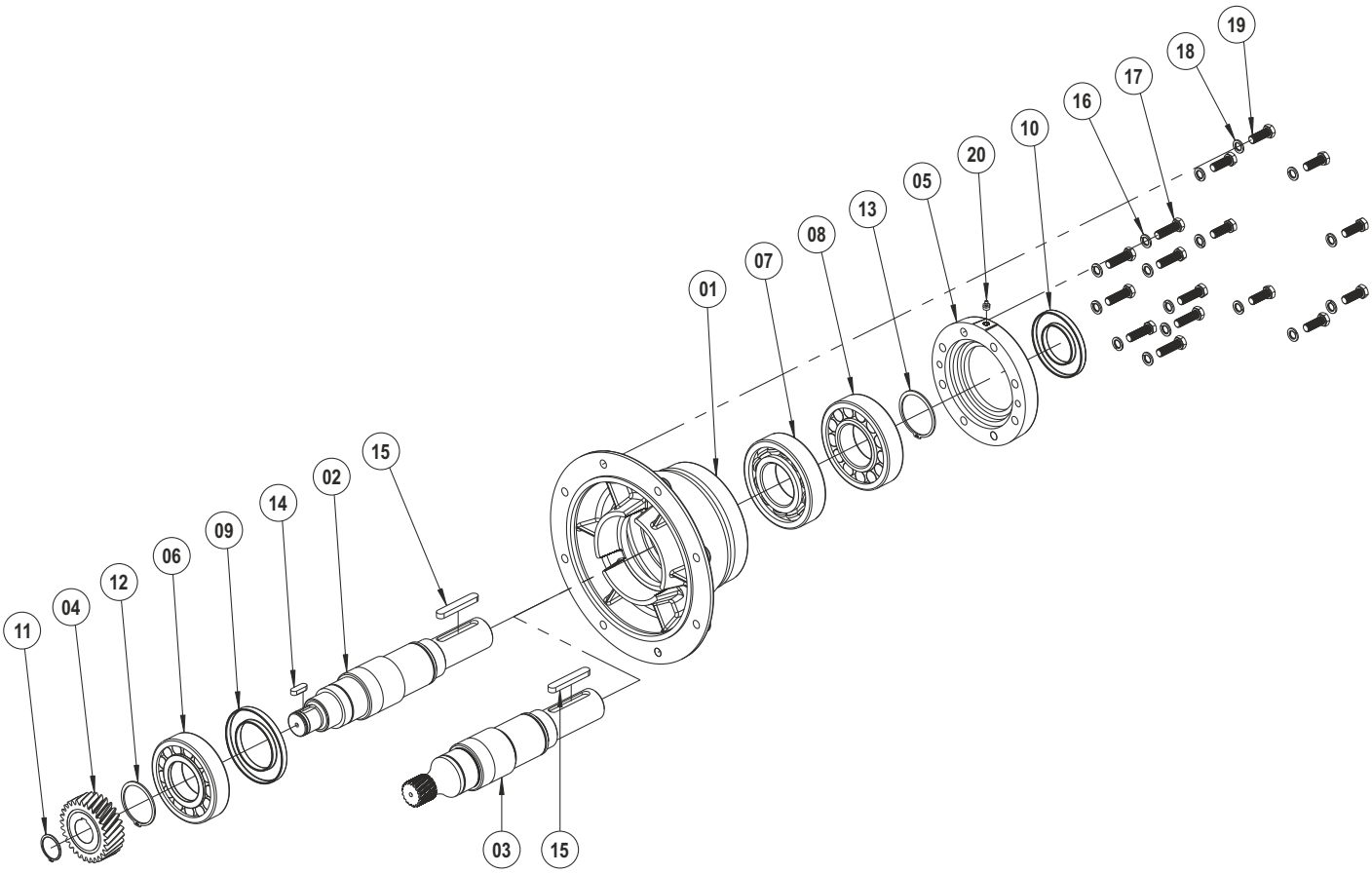

01	Gövde	**01**	Gear Case	**01**	Gehäuse
02	W Mili (Kamalı)	**02**	W Shaft (With Key)	**02**	W Welle (mit Passfeder)
03	W Mili (Dişlili)	**03**	W Shaft (With Gear)	**03**	W Welle (mit Zahnrad)
04	Z1 Dişlisi (Kamalı)	**04**	Driving Pinion (With Key)	**04**	Antriebsritzel (mit Passfeder)
05	Rulman Flanşı	**05**	Bearing Flange	**05**	Lagerflansch
06	Rulman	**06**	Bearing	**06**	Kugellager
07	Rulman	**07**	Bearing	**07**	Kugellager
08	Rulman	**08**	Bearing	**08**	Kugellager
09	Yağ Keçesi	**09**	Oil Seal	**09**	Öldichtung
10	Yağ Keçesi	**10**	Oil Seal	**10**	Öldichtung
11	Segman (DIN 471)	**11**	Circlip (DIN 471)	**11**	Sicherungsring (DIN 471)
12	Segman (DIN 471)	**12**	Circlip (DIN 471)	**12**	Sicherungsring (DIN 471)
13	Segman (DIN 471)	**13**	Circlip (DIN 471)	**13**	Sicherungsring (DIN 471)
14	Kama	**14**	Key	**14**	Passfeder
15	Kama	**15**	Key	**15**	Passfeder
16	Rondela (DIN 127)	**16**	Washer (DIN 127)	**16**	Distanzscheibe (DIN 127)
17	Cıvata (DIN 933)	**17**	Bolt (DIN 933)	**17**	Verschrauben (DIN 933)
18	Rondela (DIN 127)	**18**	Washer (DIN 127)	**18**	Distanzscheibe (DIN 127)
19	Cıvata (DIN 933)	**19**	Bolt (DIN 933)	**19**	Verschrauben (DIN 933)
20	Gresörlük	**20**	Grease Nipple	**20**	Schmiernippel

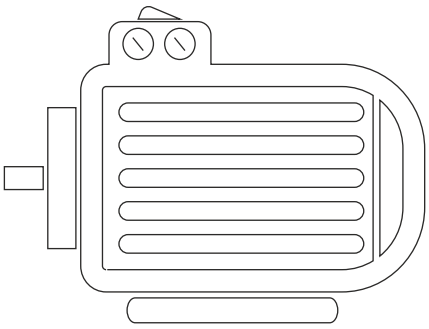

ÜÇ FAZLI MOTORLAR

THREE PHASE MOTORS

IE3

ELEKTRİKSEL ÖZELLİKLER - 50 Hz / ELECTRICAL CHARACTERISTICS AT 50 Hz

	MOTOR TİPİ MOTOR TYPE	GÖVDE TİPİ HOUSING TYPE	NOMİNAL RATED VALUES					KALKIŞTAKİ DEĞERLER STARTING VALUES				Devrilme Momenti Oranı Breakdown Torque Ratio	VERİM* EFFICIENCY* η%			Cos φ	J	Ağırlık Weight (B3)	Ses Basınç Seviyesi Sound Pressure Level
			GÜÇ POWER		DEVİR SPEED	AKIM CURRENT	MOMENT TORQUE	AKIM CURRENT I_A / I_N		MOMENT TORQUE M_A / M_N									
			kW	HP	rpm	A	Nm	λ	Δ	λ	Δ	Mk/ Mn	4/4	3/4	2/4	4/4	kgm²	kg	dBA **
2 kutup 3000 d/dak / 2 pole 3000 rpm																			
230/400V	Q3H80M2C	Aluminium	0,75	1,0	2890	1,6	2,5	8,3	-	3,7	-	4,2	80,7	79,8	76,1	0,85	0,0014	13	57
230/400V	Q3H80M2D	Aluminium	1,1	1,5	2890	2,3	3,6	9,1	-	3,9	-	4,3	82,7	82,2	79,3	0,85	0,0017	13	57
230/400V	Q3H90L2C	Aluminium	1,5	2,0	2910	3,3	4,9	10,9	-	5,2	-	5,4	84,2	83,3	80,5	0,80	0,0023	16	62
230/400V	Q3H90L2D	Aluminium	2,2	3,0	2917	4,3	7,2	9,2	-	3,1	-	4,9	85,9	86,4	85,2	0,87	0,0028	19	62
230/400V	Q3H100L2D	Aluminium	3,0	4,0	2890	5,9	9,9	8,1	-	3,2	-	3,5	87,1	88,1	87,7	0,85	0,0031	25	66
400/690V	Q3H112M2C	Aluminium	4,0	5,5	2936	7,5	13,0	3,6	10,9	1,6	4,8	5,7	88,1	88,1	85,8	0,85	0,0064	29	68
400/690V	Q3H132S2C	Aluminium	5,5	7,5	2918	10,5	18,0	3,6	10,7	1,2	3,7	5,1	89,2	89,0	87,2	0,86	0,0077	37	69
400/690V	Q3H132S2D	Aluminium	7,5	10,0	2918	13,9	24,5	3,6	10,8	1,4	4,3	5,4	90,1	90,3	89,1	0,88	0,0093	43	69
400/690V	Q3H160M2C	Aluminium	11,0	15,0	2925	20,7	36,0	3,5	10,5	1,3	3,9	5,2	91,2	91,4	90,6	0,85	0,0352	65	70
400/690V	Q3H160M2DE	Aluminium	15,0	20,0	2930	27,9	48,9	3,5	10,5	1,2	3,7	5,2	91,9	91,3	89,8	0,84	0,0402	79	71
400/690V	Q3H160L2C	Aluminium	18,5	25,0	2960	32,8	59,9	3,6	10,8	1,1	3,4	4,8	92,4	92,5	91,6	0,89	0,0481	96	70
400/690V	Q3H180M2A	Aluminium	22,0	30,0	2961	39,1	70,7	3,5	10,5	1,1	3,2	5,2	92,7	92,5	91,3	0,87	0,0587	114	77
400/690V	Q3H200L2C	Aluminium	30,0	40,0	2955	50,3	97,0	3,5	10,5	1,0	3,0	4,5	93,3	93,2	92,2	0,92	0,1028	153	78
400/690V	Q3H200L2D	Aluminium	37,0	50,0	2960	61,9	119,4	3,3	9,9	1,0	2,9	4,4	93,7	94,4	94,0	0,92	0,1138	166	78
400/690V	Q3E225M2B	Aluminium	45,0	60,0	2965	77,1	144,9	2,8	8,6	0,9	2,4	3,8	94,0	93,7	92,2	0,85	0,2350	249	80
400/690V	Q3E250M2A	Aluminium	55,0	75,0	2970	92,1	176,7	2,7	8	0,8	2,5	3,1	94,3	94,1	92,9	0,92	0,50903	279	81
400/690V	Q3EP250M2C	Cast Iron	55,0	75,0	2982	93,8	176,1	2,3	7,0	0,9	2,7	3,4	94,3	94,0	92,6	0,90	0,4870	488	81
400/690V	Q3EP280M2C	Cast Iron	75,0	100,0	2975	124,9	240,7	2,8	8,4	0,7	2,2	4,4	94,7	94,2	93,1	0,92	0,5400	585	82
400/690V	Q3EP280M2D	Cast Iron	90,0	125,0	2975	150,7	288,9	2,8	8,6	0,8	2,4	5,4	95,0	94,7	93,7	0,93	0,6450	596	82
400/690V	Q3EP315S2C	Cast Iron	110,0	127,0	2.983	187	358	2,4	7,2	0,6	1,7	2,6	95,2	95,2	94,0	0,89	2,19900	963	83
400/690V	Q3EP315M2B	Cast Iron	132,0	152,0	2.983	224	418	2,5	7,5	0,6	1,8	2,6	95,4	95,4	94,4	0,89	2,37790	1.007	83
400/690V	Q3EP315L2A	Cast Iron	160,0	184,0	2.983	271	513	2,5	7,5	0,6	1,8	2,6	95,6	95,6	94,4	0,89	2,62170	1.065	83
400/690V	Q3EP315L2C	Cast Iron	200,0	230,0	2.983	339	641	2,5	7,5	0,6	1,9	2,6	95,8	95,8	94,9	0,89	2,90860	1.180	83
400/690V	Q3EP355M2C	Cast Iron	250,0	280,0	2.983	419	800	2,4	7,3	0,6	1,7	2,5	95,8	95,8	94,7	0,90	3,81300	1.612	91
400/690V	Q3EP355L2B	Cast Iron	315,0	353,0	2.984	527	1.008	2,4	7,3	0,6	1,8	2,5	95,8	95,7	94,4	0,90	4,52000	1.771	91
400/690V	Q3EP355L2C	Cast Iron	355,0	398,0	2.981	594	1.137	2,6	7,9	0,7	2,2	2,5	95,8	95,8	95,0	0,90	5,58000	2.002	91
4 kutup 1500 d/dak / 4 pole 1500 rpm																			
230/400V	Q3H80M4D	Aluminium	0,75	1,0	1445	1,7	5,0	6,7	-	2,8	-	3,4	82,5	83,2	80,6	0,77	0,00261	13	52
230/400V	Q3H90L4C	Aluminium	1,1	1,5	1447	2,6	7,3	7,2	-	3,1	-	3,7	82,7	82,4	89,5	0,74	0,00328	15	54
230/400V	Q3H90L4D	Aluminium	1,5	2,0	1449	3,5	9,9	8,1	-	3,6	-	4,2	85,3	85,0	82,1	0,76	0,00526	20	53
230/400V	Q3H100L4C	Aluminium	2,2	3,0	1443	4,9	14,6	9,5	-	5,0	-	5,5	86,7	84,3	80,6	0,75	0,00690	25	55
230/400V	Q3H100L4D	Aluminium	3,0	4,0	1446	6,2	19,9	8,4	-	3,3	-	3,8	87,7	88,0	87,0	0,81	0,01059	31	56
400/690V	Q3H112M4D	Aluminium	4,0	5,5	1452	8,2	26,5	3,0	9,1	1,1	3,3	4,1	88,6	88,8	87,3	0,80	0,01383	32	54
400/690V	Q3H132S4B	Aluminium	5,5	7,5	1467	10,6	35,8	2,8	8,5	0,7	2,0	3,8	89,6	89,1	87,6	0,84	0,03560	53	60
400/690V	Q3H132M4D	Aluminium	7,5	10,0	1467	15,2	48,8	2,7	8,2	0,8	2,3	3,8	90,4	90,7	89,6	0,80	0,04030	58	60
400/690V	Q3H160M4C	Aluminium	11,0	15,0	1470	21,0	71,3	2,7	8,0	0,7	2,1	3,8	91,4	91,5	90,4	0,83	0,05940	84	63
400/690V	Q3H160L4B	Aluminium	15,0	20,0	1477	30,9	97,1	2,6	7,8	0,9	2,8	3,3	92,1	92,0	90,8	0,76	0,09005	101	62
400/690V	Q3H180M4B	Aluminium	18,5	25,0	1474	39,5	119,9	2,5	7,4	0,8	2,3	3,5	92,6	91,9	91,2	0,74	0,11398	118	67
400/690V	Q3H180L4B	Aluminium	22,0	30,0	1485	41,6	141,7	3,1	9,2	0,9	2,8	3,6	93,0	93,1	92,3	0,83	0,18660	158	68
400/690V	Q3H200L4D	Aluminium	30,0	40,0	1475	54,8	195,5	2,7	8,0	0,8	2,5	3,1	93,6	94,6	94,8	0,85	0,22166	194	68
400/690V	Q3E225M4B	Aluminium	37,0	50,0	1485	68,6	237,9	2,9	8,8	1,0	3,1	3,7	93,9	93,8	92,6	0,84	0,36400	280	71
400/690V	Q3E225M4C	Aluminium	45,0	60,0	1485	83,1	289,4	3,0	9,2	1,0	3,1	3,7	94,2	94,0	93,3	0,83	0,43500	276	71
400/690V	Q3E250M4B	Cast Iron	55,0	75,0	1487	106,9	353,2	3,0	9,2	1,0	3,1	3,7	94,6	94,4	93,5	0,79	0,90782	506	72
400/690V	Q3EP280M4C	Cast Iron	75,0	100,0	1485	138,9	482,3	2,6	7,8	1,0	3,0	3,2	95,0	94,8	94,0	0,82	1,06100	638	73
400/690V	Q3EP280M4D	Cast Iron	90,0	125,0	1485	163,5	578,7	2,6	7,9	1,0	3,0	3,2	95,2	95,0	93,9	0,86	1,14760	653	73
400/690V	Q3EP315S4C	Cast Iron	110,0	127,0	1.489	194	705	2,5	7,5	0,7	2,0	2,5	95,4	95,4	94,7	0,86	3,46500	867	70
400/690V	Q3EP315M4B	Cast Iron	132,0	152,0	1.489	232	846	2,5	7,6	0,7	2,1	2,5	95,6	95,6	95,0	0,86	3,96600	993	70
400/690V	Q3EP315L4A	Cast Iron	160,0	184,0	1.489	274	1.026	2,5	7,6	0,7	2,2	2,5	95,8	95,8	95,4	0,88	4,88320	1.165	70
400/690V	Q3EP315L4C	Cast Iron	200,0	230,0	1.489	346	1.282	2,7	8,2	0,7	2,2	2,5	96,0	96,0	95,5	0,87	5,23440	1.223	70
400/690V	Q3EP355M4C	Cast Iron	250,0	280,0	1.491	422	1.601	2,5	7,5	0,6	1,9	2,4	96,0	96,0	95,5	0,89	9,30600	1.692	82
400/690V	Q3EP355L4B	Cast Iron	315,0	353,0	1.491	532	2.017	2,5	7,5	0,6	1,9	2,4	96,0	96,0	95,5	0,89	10,06700	1.879	82
400/690V	Q3EP355L4C	Cast Iron	355,0	398,0	1.491	600	2.273	2,5	7,5	0,7	2,0	2,3	96,0	96,0	95,5	0,89	11,90000	1.953	82

* IEC 60034-2-1' e göre / According to IEC 60034-2-1
** Ses Basınç Seviyeleri motordan 1m uzaklıktan ölçülmüştür. / The sound pressure measurements are taken 1m away from the motor
*** Tolerans +3 dBA / Tolerance +3 dBA

	MOTOR TİPİ MOTOR TYPE	GÖVDE TİPİ HOUSING TYPE	NOMİNAL RATED VALUES					KALKIŞTAKİ DEĞERLER STARTING VALUES				Devrilme Momenti Oranı Breakdown Torque Ratio	VERİM* EFFICIENCY* η%			Cos φ	J	Ağırlık Weight (B3)	Ses Basınç Seviyesi Sound Pressure Level
			GÜÇ POWER		DEVİR SPEED	AKIM CURRENT	MOMENT TORQUE	AKIM CURRENT I_A / I_N		MOMENT TORQUE M_A / M_N									
			kW	HP	rpm	A	Nm	λ	Δ	λ	Δ	Mk/ Mn	4/4	3/4	2/4	4/4	kgm²	kg	dBA **
6 kutup 1000 d/dak / 6 pole 1000 rpm																			
230/400V	Q3H90L6C	Aluminium	0,75	1,0	950	2,1	7,6	4,9	-	2,5	-	3,0	78,9	78,4	74,9	0,67	0,00460	18	53
230/400V	Q3H90L6D	Aluminium	1,1	1,5	950	3,0	11,1	4,5	-	2,6	-	2,9	81,0	80,6	78,3	0,67	0,00528	20	53
230/400V	Q3H100L6D	Aluminium	1,5	2,0	960	4,1	14,9	4,8	-	2,6	-	3,0	82,5	81,7	78,2	0,65	0,01059	26	55
230/400V	Q3H112M6D	Aluminium	2,2	3,0	957	5,2	22,0	4,9	-	2,7	-	3,0	84,3	84,6	83,7	0,71	0,01383	32	57
400/690V	Q3H132S6A	Aluminium	3,0	4,0	978	7,3	29,3	1,9	5,7	0,6	2,0	2,5	85,6	85,2	82,8	0,68	0,03560	53	61
400/690V	Q3H132M6A	Aluminium	4,0	5,5	975	9,1	39,2	2,0	6,0	0,7	2,2	2,6	86,8	85,7	82,8	0,72	0,04030	58	60
400/690V	Q3H132M6B	Aluminium	5,5	7,5	971	12,0	54,1	2,1	6,3	0,7	2,1	2,6	88,0	87,6	85,3	0,75	0,05940	82	60
400/690V	Q3H160M6C	Aluminium	7,5	10,0	976	16,5	73,4	2,0	6,0	0,7	2,2	3,0	89,1	89,0	88,0	0,73	0,07540	88	62
400/690V	Q3H160L6D	Aluminium	11,0	15,0	974	24,2	107,8	2,1	6,3	0,7	2,2	3,0	90,3	90,1	89,3	0,73	0,09000	101	62
400/690V	Q3H180L6B	Aluminium	15,0	20,0	980	32,2	146.2	2,2	6,6	0,7	2,1	2,9	91,2	90,9	88,7	0,75	0,18660	155	68
400/690V	Q3H200L6C	Aluminium	18,5	25,0	981	40,3	180.1	2,3	6,9	0,6	1,9	2,7	91,7	91,6	91,3	0,72	0,23286	194	69
400/690V	Q3H200L6D	Aluminium	22,0	30,0	982	50,5	213,9	2,9	5,0	0,6	1,9	2,2	92,2	92,2	91,6	0,69	0,22166	193	69
400/690V	Q3E225M6C	Aluminium	30,0	40,0	975	59,1	293,8	1,9	6,1	0,6	1,8	2,5	92,9	92,8	91,8	0,80	0,52900	238	71

* IEC 60034-2-1' e göre / According to IEC 60034-2-1
** Ses Basınç Seviyeleri motordan 1m uzaklıktan ölçülmüştür. / The sound pressure measurements are taken 1m away from the motor
*** Tolerans +3 dBA / Tolerance +3 dBA

BOYUTLAR - B3 / DIMENSION - B3

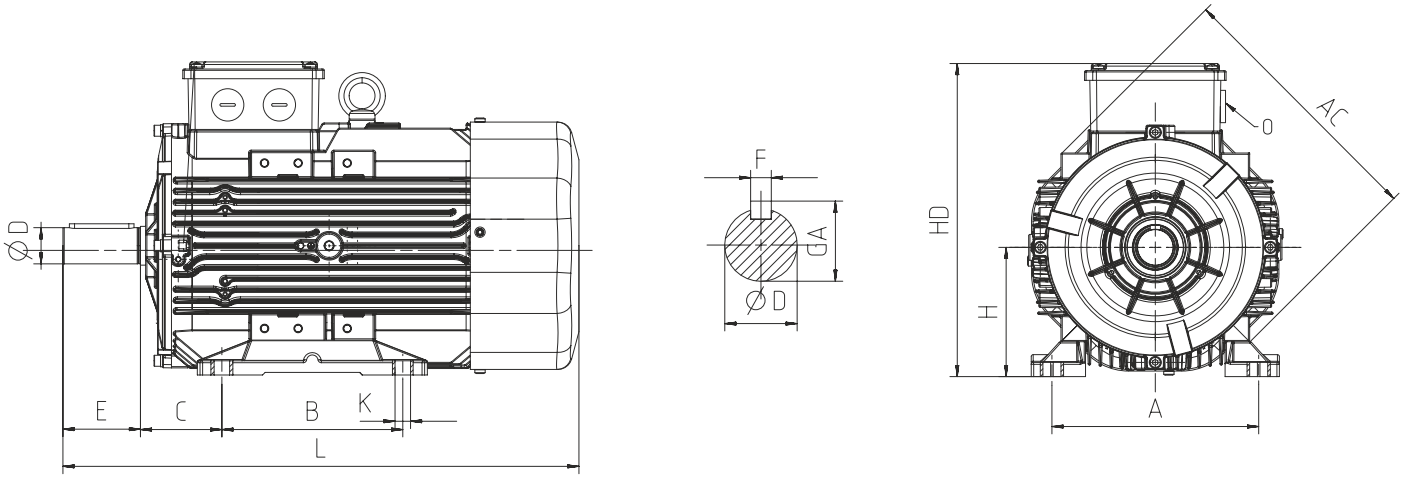

				Ana Boyutlar Main Dimensions			Ayaklı Motorlar Foot Mounted Motors						Mil Shaft				Rulman Bearing		Keçe Seal	
Güç Power (kW)	Kutup sayısı Number of Poles	Motor Tipi Motor Type	Gövde Tipi Housing Type	AC	L	O	B	A	H	HD	K	C	D(1)	E	GA	F(2)	Kasnak Tarafı Drive Side	Kasnak Tarafı Aksi Non drive Side	Kasnak Tarafı Drive Side	Kasnak Tarafı Aksi Non drive Side
0,75	2	Q3H80M2C	Aluminium	158	268	1xM20	100	125	80	216	10	50	19	40	21,5	6	6204-ZZ	6204-ZZ	20*30*7	20*30*7
0,75	4	Q3H80M4D	Aluminium	158	268	1xM20	100	125	80	216	10	50	19	40	21,5	6	6204-ZZ	6204-ZZ	20*30*7	20*30*7
0,75	6	Q3H90L6C	Aluminium	172	344	1xM25	100-125	140	90	223	10	56	24	50	27,0	8	6305-ZZ	6205-ZZ	25*40*7	25*40*7
1,1	2	Q3H80M2D	Aluminium	158	268	1xM20	100	125	80	216	10	50	19	40	21,5	6	6204-ZZ	6204-ZZ	20*30*7	20*30*7
1,1	4	Q3H90L4C	Aluminium	158	303	1xM25	100-125	140	90	213	10	56	24	50	27,0	8	6305-ZZ	6204-ZZ	25*40*7	20*30*7
1,1	6	Q3H90L6D	Aluminium	172	344	1xM25	100-125	140	90	223	10	56	24	50	27,0	8	6305-ZZ	6205-ZZ	25*40*7	25*40*7
1,5	2	Q3H90L2C	Aluminium	158	303	1xM25	100-125	140	90	213	10	56	24	50	27,0	8	6305-ZZ	6204-ZZ	25*40*7	20*30*7
1,5	4	Q3H90L4D	Aluminium	172	344	1xM25	100-125	140	90	223	10	56	24	50	27,0	8	6305-ZZ	6205-ZZ	25*40*7	25*40*7
1,5	6	Q3H100L6D	Aluminium	191	400	1xM25	140	160	100	243	12	63	28	60	31,0	8	6306-ZZ	6205-ZZ	30*47*7	30*47*7
2,2	2	Q3H90L2D	Aluminium	172	344	1xM25	100-125	140	90	223	10	56	24	50	27,0	8	6305-ZZ	6205-ZZ	25*40*7	25*40*7
2,2	4	Q3H100L4C	Aluminium	172	384	1xM25	140	160	100	233	12	63	28	60	31,0	8	6306-ZZ	6205-ZZ	30*47*7	25*40*7
2,2	6	Q3H112M6D	Aluminium	210	396	1xM25	140	190	112	265	12	70	28	60	31,0	8	6306-ZZ	6206-ZZ	30*47*7	30*47*7
3	2	Q3H100L2D	Aluminium	172	349	1xM25	140	160	100	233	12	63	28	60	31,0	8	6306-ZZ	6205-ZZ	30*47*7	25*40*7
3	4	Q3H100L4D	Aluminium	191	400	1xM25	140	160	100	243	12	63	28	60	31,0	8	6306-ZZ	6205-ZZ	30*47*7	30*47*7
3	6	Q3H132S6A	Aluminium	260	481	1xM32	140-178	216	132	312	12	89	38	80	41,0	10	6208-ZZ	6208-ZZ	40*62*10	40*62*10
4	2	Q3H112M2C	Aluminium	191	400	1xM25	140	190	112	254	12	70	28	60	31,0	8	6306-ZZ	6205-ZZ	30*47*7	25*40*7
4	4	Q3H112M4D	Aluminium	210	396	1xM25	140	190	112	265	12	70	28	60	31,0	8	6306-ZZ	6206-ZZ	30*47*7	30*47*7
4	6	Q3H132M6A	Aluminium	260	481	1xM32	140-178	216	132	312	12	89	38	80	41,0	10	6208-ZZ	6208-ZZ	40*62*10	40*62*10
5,5	2	Q3H132S2C	Aluminium	210	422	1xM25	140-178	216	132	283	12	89	38	80	41,0	10	6208-ZZ	6206-ZZ	40*62*10	30*47*7
5,5	4	Q3H132S4B	Aluminium	260	481	1xM32	140-178	216	132	312	12	89	38	80	41,0	10	6208-ZZ	6208-ZZ	40*62*10	40*62*10
5,5	6	Q3H132M6B	Aluminium	260	481	1xM32	140-178	216	132	312	12	89	38	80	41,0	10	6208-ZZ	6208-ZZ	40*62*10	40*62*10
7,5	2	Q3H132S2D	Aluminium	210	448	1xM25	140-178	216	132	283	12	89	38	80	41,0	10	6208-ZZ	6206-ZZ	40*62*10	30*47*7
7,5	4	Q3H132M4D	Aluminium	260	481	1xM32	140-178	216	132	312	12	89	38	80	41,0	10	6208-ZZ	6208-ZZ	40*62*10	40*62*10
7,5	6	Q3H160M6C	Aluminium	305	591	1xM32	210-254	254	160	368	14,5	108	42	110	45,0	12	6309-ZZ	6209-ZZ	45*72*10	45*72*10
11	2	Q3H160M2C	Aluminium	260	520	1xM32	210-254	254	160	351	14,5	108	42	110	45,0	12	6309-ZZ	6208-ZZ	45*72*10	40*62*10
11	4	Q3H160M4C	Aluminium	260	578	1xM32	210-254	254	160	351	14,5	108	42	110	45,0	12	6309-ZZ	6208-ZZ	45*72*10	40*62*10
11	6	Q3H160L6D	Aluminium	305	591	1xM32	210-254	254	160	368	14,5	108	42	110	45,0	12	6309-ZZ	6209-ZZ	45*72*10	45*72*10
15	2	Q3H160M2DE	Aluminium	260	580	1xM32	210-254	254	160	351	14,5	108	42	110	45,0	12	6309-ZZ	6208-ZZ	45*72*10	40*62*10
15	4	Q3H160L4B	Aluminium	305	591	1xM32	210-254	254	160	368	14,5	108	42	110	45,0	12	6309-ZZ	6209-ZZ	45*72*10	45*72*10
15	6	Q3H180L6B	Aluminium	349	696	1xM40	241-279	279	180	437	14,5	121	48	110	51,5	14	6310-ZZ	6310-ZZ	50*80*10	50*80*10

(1) Toleranslar 28 mm'ye kadar DIN EN 50347 "j6", 28 mm ve üzeri "k6" / Tolerance DIN EN 50347 "j6" up to 28mm, "k6" above 28mm
(2) DIN 6885'e göre / According to DIN 6885

				Ana Boyutlar Main Dimensions			Ayaklı Motorlar Foot Mounted Motors						Mil Shaft				Rulman Bearing		Keçe Seal	
Güç Power (kW)	Kutup sayısı Number of Poles	Motor Tipi Motor Type	Gövde Tipi Housing Type	AC	L	O	B	A	H	HD	K	C	D(1)	E	GA	F(2)	Kasnak Tarafı Drive Side	Kasnak Tarafı Aksi Non drive Side	Kasnak Tarafı Drive Side	Kasnak Tarafı Aksi Non drive Side
18,5	2	Q3H160L2C	Aluminium	305	591	1xM32	210-254	254	160	368	14,5	108	42	110	45,0	12	6309-ZZ	6209-ZZ	45*72*10	45*72*10
18,5	4	Q3H180M4B	Aluminium	305	596	1xM32	241-279	279	180	398	14,5	121	48	110	51,5	14	6310-ZZ	6209-ZZ	50*80*10	45*72*10
18,5	6	Q3H200L6C	Aluminium	349	750	1xM50	305	318	200	455	18,5	133	55	110	59,0	16	6312-ZZ	6310-ZZ	60*90*10	60*90*10
22	2	Q3H180M2B	Aluminium	305	596	1xM32	241-279	279	180	398	14,5	121	48	110	51,5	14	6310-ZZ	6209-ZZ	50*80*10	45*72*10
22	4	Q3H180L4B	Aluminium	349	696	1xM40	241-279	279	180	437	14,5	121	48	110	51,5	14	6310-ZZ	6310-ZZ	50*80*10	50*80*10
22	6	Q3H200L6D	Aluminium	349	759	1xM50	267-305	318	200	455	18,5	133	55	110	59,0	16	6312-ZZ	6310-ZZ	60*90*10	60*90*10
30	2	Q3H200L2C	Aluminium	349	706	1xM50	267-305	318	200	455	18,5	133	55	110	59,0	16	6312-ZZ	6310-ZZ	60*90*10	60*90*10
30	4	Q3H200L4D	Aluminium	349	759	1xM50	267-305	318	200	455	18,5	133	55	110	59,0	16	6312-ZZ	6310-ZZ	60*90*10	60*90*10
30	6	Q3E225M6C	Aluminium	456	765	1xM50	286-311	356	225	485	18,5	149	60	140	64,0	18	6313-ZZ	6313-ZZ	65*100*13	65*100*13
37	2	Q3H200L2D	Aluminium	349	706	1xM50	305	318	200	455	18,5	133	55	110	59,0	16	6312-ZZ	6310-ZZ	60*90*10	60*90*10
37	4	Q3E225M4B	Aluminium	456	765	1xM50	286-311	356	225	485	18,5	149	60	140	64,0	18	6313-ZZ	6313-ZZ	65*100*13	65*100*13
45	2	Q3E225M2B	Aluminium	456	735	1xM50	286-311	356	225	485	18,5	149	55	110	59,0	16	6313-ZZ	6313-ZZ	65*100*13	65*100*13
45	4	Q3E225M4C	Aluminium	456	765	1xM50	286-311	356	225	485	18,5	149	60	140	64,0	18	6313-ZZ	6313-ZZ	65*100*13	65*100*13
55	2	Q3E250M2A	Aluminium	527	886	2xM50	349	406	250	615	24	149	60	140	64,0	18	6315-2Z	6313-2Z	75*112*12	65*100*13
55	2	Q3EP250M2C	Cast Iron	489	893	1xM50	349	406	250	616	24	149	60	140	69,0	18	6316	6316	80*100*10	80*100*10
55	4	Q3E250M4B	Cast Iron	489	893	1xM50	349	406	250	616	24	149	65	140	69,0	18	6316	6316	80*100*10	80*100*10
75	2	Q3EP280M2C	Cast Iron	489	1025	1xM50	419	457	280	647	24	190	65	140	69,0	18	6316	6316	80*100*10	80*100*10
75	4	Q3EP280M4C	Cast Iron	489	1025	1xM50	419	457	280	647	24	190	75	140	79,5	20	6316	6316	80*100*10	80*100*10
90	2	Q3EP280M2D	Cast Iron	489	1025	1xM50	419	457	280	647	24	190	65	140	69,0	18	6316	6316	80*100*10	80*100*10
90	4	Q3EP280M4D	Cast Iron	489	1025	1xM50	419	457	280	647	24	190	75	140	79,5	20	6316	6316	80*100*10	80*100*10
110	2	Q3EP315S2C	Cast Iron	652	1176	2xM63	406	508	315	833	28	216	65	140	69	18	6316	6316	80*100*5.5	80*100*5.5
110	4	Q3EP315S4C	Cast Iron	652	1206	2xM63	406	508	315	833	28	216	80	170	85	22	6319	6319	95*115*5.5	95*115*5.5
132	2	Q3EP315M2B	Cast Iron	652	1176	2xM63	457	508	315	833	28	216	65	140	69	18	6316	6316	80*100*5.5	80*100*5.5
132	4	Q3EP315M4B	Cast Iron	652	1206	2xM63	457	508	315	833	28	216	80	170	85	22	6319	6319	95*115*5.5	95*115*5.5
160	2	Q3EP315L2A	Cast Iron	652	1287	2xM63	508	508	315	833	28	216	65	140	69	18	6316	6316	80*100*5.5	80*100*5.5
160	4	Q3EP315L4A	Cast Iron	652	1317	2xM63	508	508	315	833	28	216	80	170	85	22	6319	6319	95*115*5.5	95*115*5.5
200	2	Q3EP315L2C	Cast Iron	652	1287	2xM63	508	508	315	833	28	216	65	140	69	18	6316	6316	80*100*5.5	80*100*5.5
200	4	Q3EP315L4C	Cast Iron	652	1317	2xM63	508	508	315	833	28	216	80	170	85	22	6319	6319	95*115*5.5	95*115*5.5
250	2	Q3EP355M2C	Cast Iron	762	1512	4xM63	560	610	355	997	28	254	75	140	80	20	6317	6317	85*105*5.5	85*105*5.5
250	4	Q3EP355M4C	Cast Iron	762	1542	4xM63	560	610	355	997	28	254	95	170	100	25	6322	6322	110*130*5.5	110*130*5.5
315	2	Q3EP355L2B	Cast Iron	762	1512	4xM63	630	610	355	997	28	254	75	140	80	20	6317	6317	85*105*5.5	85*105*5.5
315	4	Q3EP355L4B	Cast Iron	762	1542	4xM63	630	610	355	997	28	254	95	170	100	25	6322	6322	110*130*5.5	110*130*5.5
355	2	Q3EP355L2C	Cast Iron	762	1512	4xM63	630	610	355	997	28	254	75	140	80	20	6317	6317	85*105*5.5	85*105*5.5
355	4	Q3EP355L4C	Cast Iron	762	1542	4xM63	630	610	355	997	28	254	95	170	100	25	6322	6322	110*130*5,5	110*130*5,5

(1) Toleranslar 28 mm'ye kadar DIN EN 50347 "j6", 28 mm ve üzeri "k6" / Tolerance DIN EN 50347 "j6" up to 28mm, "k6" above 28mm
(2) DIN 6885'e göre / According to DIN 6885

BOYUTLAR - B5, B35 / DIMENSION - B5, B35

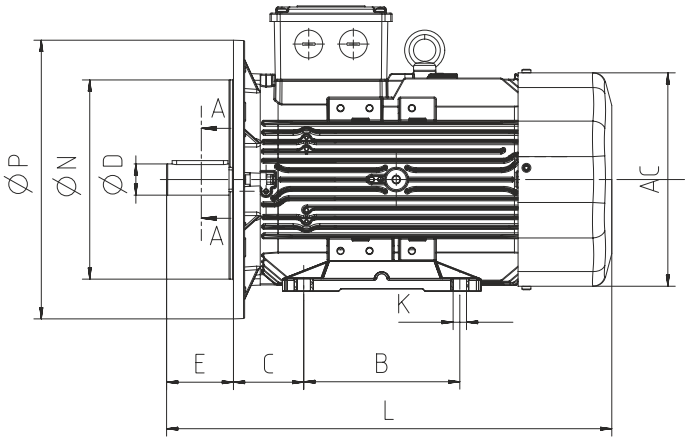

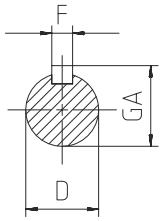

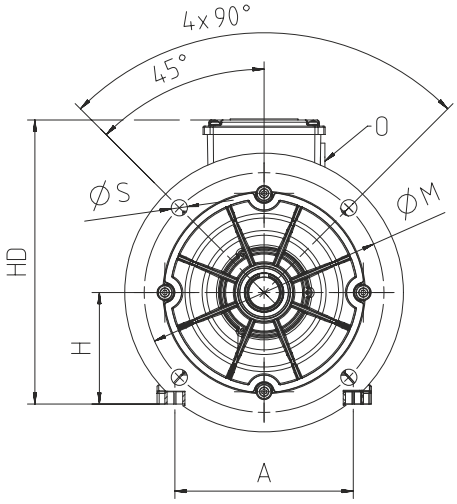

				Ana Boyutlar Main Dimensions			Ayaklı Motorlar Foot Mounted Motors					Mil Shaft				Rulman Bearing		Keçe Seal		Flanş (FA) (B5) Flange (FA) (B5)				
Güç Power (kW)	Kutup sayısı Number of Poles	Motor Tipi Motor Type	Gövde Tipi Housing Type	AC	L	O	B	A	H	HD	K	D(1)	E	GA	F(2)	Kasnak Tarafı Drive Side	Kasnak Tarafı Aksi Non drive Side	Kasnak Tarafı Drive Side	Kasnak Tarafı Aksi Non drive Side	P	N(3)	M	R	S
0,75	2	Q3H80M2C	Aluminium	158	268	1xM20	100	125	80	216	10	19	40	21,5	6	6204-ZZ	6204-ZZ	20*30*7	20*30*7	200	130	165	-	12
0,75	4	Q3H80M4D	Aluminium	158	268	1xM20	100	125	80	216	10	19	40	21,5	6	6204-ZZ	6204-ZZ	20*30*7	20*30*7	200	130	165	-	12
0,75	6	Q3H90L6C	Aluminium	172	344	1xM25	100-125	140	90	223	10	24	50	27,0	8	6305-ZZ	6205-ZZ	25*40*7	25*40*7	200	130	165	-	12
1,1	2	Q3H80M2D	Aluminium	158	268	1xM20	100	125	80	216	10	19	40	21,5	6	6204-ZZ	6204-ZZ	20*30*7	20*30*7	200	130	165	-	12
1,1	4	Q3H90L4C	Aluminium	158	303	1xM25	100-125	140	90	213	10	24	50	27,0	8	6305-ZZ	6204-ZZ	25*40*7	20*30*7	200	130	165	-	12
1,1	6	Q3H90L6D	Aluminium	172	344	1xM25	100-125	140	90	223	10	24	50	27,0	8	6305-ZZ	6205-ZZ	25*40*7	25*40*7	200	130	165	-	12
1,5	2	Q3H90L2C	Aluminium	158	303	1xM25	100-125	140	90	213	10	24	50	27,0	8	6305-ZZ	6204-ZZ	25*40*7	20*30*7	200	130	165	-	12
1,5	4	Q3H90L4D	Aluminium	172	344	1xM25	100-125	140	90	223	10	24	50	27,0	8	6305-ZZ	6205-ZZ	25*40*7	25*40*7	200	130	165	-	12
1,5	6	Q3H100L6D	Aluminium	191	400	1xM25	140	160	100	243	12	28	60	31,0	8	6306-ZZ	6205-ZZ	30*47*7	30*47*7	250	180	215	-	14,5
2,2	2	Q3H90L2D	Aluminium	172	344	1xM25	100-125	140	90	223	10	24	50	27,0	8	6305-ZZ	6205-ZZ	25*40*7	25*40*7	200	130	165	-	12
2,2	4	Q3H100L4C	Aluminium	172	384	1xM25	140	160	100	233	12	28	60	31,0	8	6306-ZZ	6205-ZZ	30*47*7	25*40*7	250	180	215	-	14,5
2,2	6	Q3H112M6D	Aluminium	210	396	1xM25	140	190	112	265	12	28	60	31,0	8	6306-ZZ	6206-ZZ	30*47*7	30*47*7	250	180	215	-	14,5
3	2	Q3H100L2D	Aluminium	172	349	1xM25	140	160	100	233	12	28	60	31,0	8	6306-ZZ	6205-ZZ	30*47*7	25*40*7	250	180	215	-	14,5
3	4	Q3H100L4D	Aluminium	191	400	1xM25	140	160	100	243	12	28	60	31,0	8	6306-ZZ	6205-ZZ	30*47*7	30*47*7	250	180	215	-	14,5
3	6	Q3H132S6A	Aluminium	260	481	1xM32	140-178	216	132	312	12	38	80	41,0	10	6208-ZZ	6208-ZZ	40*62*10	40*62*10	300	230	265	-	14,5
4	2	Q3H112M2C	Aluminium	191	399	1xM25	140	190	112	254	12	28	60	31,0	8	6306-ZZ	6205-ZZ	30*47*7	25*40*7	250	180	215	-	14,5
4	4	Q3H112M4D	Aluminium	210	396	1xM25	140	190	112	265	12	28	60	31,0	8	6306-ZZ	6206-ZZ	30*47*7	30*47*7	250	180	215	-	14,5
4	6	Q3H132M6A	Aluminium	260	481	1xM32	140-178	216	132	312	12	38	80	41,0	10	6208-ZZ	6208-ZZ	40*62*10	40*62*10	300	230	265	-	14,5
5,5	2	Q3H132S2C	Aluminium	210	422	1xM25	140-178	216	132	283	12	38	80	41,0	10	6208-ZZ	6206-ZZ	40*62*10	30*47*7	300	230	265	-	14,5
5,5	4	Q3H132S4B	Aluminium	260	481	1xM32	140-178	216	132	312	12	38	80	41,0	10	6208-ZZ	6208-ZZ	40*62*10	40*62*10	300	230	265	-	14,5
5,5	6	Q3H132M6B	Aluminium	260	481	1xM32	140-178	216	132	312	12	38	80	41,0	10	6208-ZZ	6208-ZZ	40*62*10	40*62*10	300	230	265	-	14,5
7,5	2	Q3H132S2D	Aluminium	210	448	1xM25	140-178	216	132	283	12	38	80	41,0	10	6208-ZZ	6206-ZZ	40*62*10	30*47*7	300	230	265	-	14,5
7,5	4	Q3H132M4D	Aluminium	260	481	1xM32	140-178	216	132	312	12	38	80	41,0	10	6208-ZZ	6208-ZZ	40*62*10	40*62*10	300	230	265	-	14,5
7,5	6	Q3H160M6C	Aluminium	305	591	1xM32	210-254	254	160	368	14,5	42	110	45,0	12	6309-ZZ	6209-ZZ	45*72*10	45*72*10	350	250	300	-	18,5
11	2	Q3H160M2C	Aluminium	260	520	1xM32	210-254	254	160	351	14,5	42	110	45,0	12	6309-ZZ	6208-ZZ	45*72*10	40*62*10	350	250	300	-	18,5
11	4	Q3H160M4C	Aluminium	260	580	1xM32	210-254	254	160	351	14,5	42	110	45,0	12	6309-ZZ	6208-ZZ	45*72*10	40*62*10	350	250	300	-	18,5
11	6	Q3H160L6D	Aluminium	305	591	1xM32	210-254	254	160	368	14,5	42	110	45,0	12	6309-ZZ	6209-ZZ	45*72*10	45*72*10	350	250	300	-	18,5
15	2	Q3H160M2DE	Aluminium	260	580	1xM32	210-254	254	160	351	14,5	42	110	45,0	12	6309-ZZ	6208-ZZ	45*72*10	40*62*10	350	250	300	-	18,5
15	4	Q3H160L4B	Aluminium	305	591	1xM32	210-254	254	160	368	14,5	42	110	45,0	12	6309-ZZ	6209-ZZ	45*72*10	45*72*10	350	250	300	-	18,5
15	6	Q3H180L6B	Aluminium	349	696	1xM40	241-279	279	180	437	14,5	48	110	51,5	14	6310-ZZ	6310-ZZ	50*80*10	50*80*10	350	250	300	-	18,5

(1) Toleranslar 28 mm'ye kadar DIN EN 50347 "j6", 28 mm ve üzeri "k6" / Tolerance DIN EN 50347 "j6" up to 28mm, "k6" above 28mm
(2) DIN 6885'e göre / According to DIN 6885
(3) Tolerans DIN EN 50347 "j6" / Tolerance DIN EN 50347 "j6"

				Ana Boyutlar Main Dimensions			Ayaklı Motorlar Foot Mounted Motors					Mil Shaft				Rulman Bearing		Keçe Seal		Flanş (FA) (B5) Flange (FA) (B5)				
Güç Power (kW)	Kutup sayısı Number of Poles	Motor Tipi Motor Type	Gövde Tipi Housing Type	AC	L	O	B	A	H	HD	K	D(1)	E	GA	F(2)	Kasnak Tarafı Drive Side	Kasnak Tarafı Aksi Non drive Side	Kasnak Tarafı Drive Side	Kasnak Tarafı Aksi Non drive Side	P	N(3)	M	R	S
18,5	4	Q3H180M4B	Aluminium	305	596	1xM32	241-279	279	180	398	14,5	48	110	51,5	14	6310-ZZ	6209-ZZ	50*80*10	45*72*10	350	250	300	-	18,5
18,5	6	Q3H200L6C	Aluminium	349	750	1xM50	305	318	200	455	18,5	55	110	59,0	16	6312-ZZ	6310-ZZ	60*90*10	60*90*10	400	300	350	-	18,5
22	2	Q3H180M2A	Aluminium	305	596	1xM32	241-279	279	180	398	14,5	48	110	51,5	14	6310-ZZ	6209-ZZ	50*80*10	45*72*10	350	250	300	-	18,5
22	4	Q3H180L4B	Aluminium	349	696	1xM40	241-279	279	180	437	14,5	48	110	51,5	14	6310-ZZ	6310-ZZ	50*80*10	50*80*10	350	250	300	-	18,5
22	6	Q3H200L6D	Aluminium	349	759	1xM50	305	318	200	455	18,5	55	110	59,0	16	6312-ZZ	6310-ZZ	60*90*10	60*90*10	400	300	350	-	18,5
30	2	Q3H200L2C	Aluminium	349	706	1xM50	305	318	200	455	18,5	55	110	59,0	16	6312-ZZ	6310-ZZ	60*90*10	60*90*10	400	300	350	-	18,5
30	4	Q3H200L4D	Aluminium	349	759	1xM50	305	318	200	455	18,5	55	110	59,0	16	6312-ZZ	6310-ZZ	60*90*10	60*90*10	400	300	350	-	18,5
30	6	Q3E225M6C	Aluminium	456	765	1xM50	286-311	356	225	485	18,5	60	140	64,0	18	6313-ZZ	6313-ZZ	65*100*13	65*100*13	450	350	400	-	18,5
37	2	Q3H200L2D	Aluminium	349	706	1xM50	305	318	200	455	18,5	55	110	59,0	16	6312-ZZ	6310-ZZ	60*90*10	60*90*10	400	300	350	-	18,5
37	4	Q3E225M4B	Aluminium	456	765	1xM50	286-311	356	225	485	18,5	60	140	64,0	18	6313-ZZ	6313-ZZ	65*100*13	65*100*13	450	350	400	-	18,5
45	2	Q3E225M2B	Aluminium	456	735	1xM50	286-311	356	225	485	18,5	55	110	59,0	16	6313-ZZ	6313-ZZ	65*100*13	65*100*13	450	350	400	-	18,5
45	4	Q3E225M4C	Aluminium	456	765	1xM50	286-311	356	225	485	18,5	60	140	64,0	18	6313-ZZ	6313-ZZ	65*100*13	65*100*13	450	350	400	-	18,5
55	2	Q3E250M2A	Aluminium	527	886	2*M50	349	406	250	615	24	60	140	64,0	18	6315-2Z	6313-2Z	75*112*12	65*100*13	550	450	500	-	18,5
55	2	Q3EP250M2C	Cast Iron	489	893	1xM50	349	406	250	616	24	60	140	69,0	18	6316	6316	80*100*10	80*100*10	550	450	500	-	18,5
55	4	Q3E250M4B	Cast Iron	489	893	1xM50	349	406	250	616	24	65	140	69,0	18	6316	6316	80*100*10	80*100*10	550	450	500	-	18,5
75	2	Q3EP280M2C	Cast Iron	489	1025	1xM50	368-419	457	280	647	24	65	140	69,0	18	6316	6316	80*100*10	80*100*10	550	450	500	-	18,5
75	4	Q3EP280M4C	Cast Iron	489	1025	1xM50	368-419	457	280	647	24	75	140	79,5	20	6316	6316	80*100*10	80*100*10	550	450	500	-	18,5
90	2	Q3EP280M2D	Cast Iron	489	1025	1xM50	368-419	457	280	647	24	65	140	69,0	18	6316	6316	80*100*10	80*100*10	550	450	500	-	18,5
90	4	Q3EP280M4D	Cast Iron	489	1025	1xM50	368-419	457	280	647	24	75	140	79,5	20	6316	6316	80*100*10	80*100*10	550	450	500	-	18,5
110	2	Q3EP315S2C	Cast Iron	652	1176	2*M63	406	508	315	833	28	65	140	69	18	6316	6316	80*100*5.5	80*100*5.5	660	550	600	0	24
110	4	Q3EP315S4C	Cast Iron	652	1206	2*M63	406	508	315	833	28	80	170	85	22	6319	6319	95*115*5.5	95*115*5.5	660	550	600	0	24
132	2	Q3EP315M2B	Cast Iron	652	1176	2*M63	457	508	315	833	28	65	140	69	18	6316	6316	80*100*5.5	80*100*5.5	660	550	600	0	24
132	4	Q3EP315M4B	Cast Iron	652	1206	2*M63	457	508	315	833	28	80	170	85	22	6319	6319	95*115*5.5	95*115*5.5	660	550	600	0	24
160	2	Q3EP315L2A	Cast Iron	652	1287	2*M63	508	508	315	833	28	65	140	69	18	6316	6316	80*100*5.5	80*100*5.5	660	550	600	0	24
160	4	Q3EP315L4A	Cast Iron	652	1317	2*M63	508	508	315	833	28	80	170	85	22	6319	6319	95*115*5.5	95*115*5.5	660	550	600	0	24
200	2	Q3EP315L2C	Cast Iron	652	1287	2*M63	508	508	315	833	28	65	140	69	18	6316	6316	80*100*5.5	80*100*5.5	660	550	600	0	24
200	4	Q3EP315L4C	Cast Iron	652	1317	2*M63	508	508	315	833	28	80	170	85	22	6319	6319	95*115*5.5	95*115*5.5	660	550	600	0	24
250	2	Q3EP355M2C	Cast Iron	762	1512	4*M63	560	610	355	997	28	75	140	80	20	6317	6317	85*105*5.5	85*105*5.5	800	680	740	0	24
250	4	Q3EP355M4C	Cast Iron	762	1542	4*M63	560	610	355	997	28	95	170	100	25	6322	6322	110*130*5.5	110*130*5.5	800	680	740	0	24
315	2	Q3EP355L2B	Cast Iron	762	1512	4*M63	630	610	355	997	28	75	140	80	20	6317	6317	85*105*5.5	85*105*5.5	800	680	740	0	24
315	4	Q3EP355L4B	Cast Iron	762	1542	4*M63	630	610	355	997	28	95	170	100	25	6322	6322	110*130*5.5	110*130*5.5	800	680	740	0	24
355	2	Q3EP355L2C	Cast Iron	762	1512	4*M63	630	610	355	997	28	75	140	80	20	6317	6317	85*105*5,5	85*105*5,5	800	680	740	0	24
355	4	Q3EP355L4C	Cast Iron	762	1542	4*M63	630	610	355	997	28	95	170	100	25	6322	6322	110*130*5,5	110*130*5,5	800	680	740	0	24

(1) Toleranslar 28 mm'ye kadar DIN EN 50347 "j6", 28 mm ve üzeri "k6" / Tolerance DIN EN 50347 "j6" up to 28mm, "k6" above 28mm
(2) DIN 6885'e göre / According to DIN 6885
(3) Tolerans DIN EN 50347 "j6" / Tolerance DIN EN 50347 "j6"

BOYUTLAR - B14a, B34a / DIMENSION - B14a, B34a

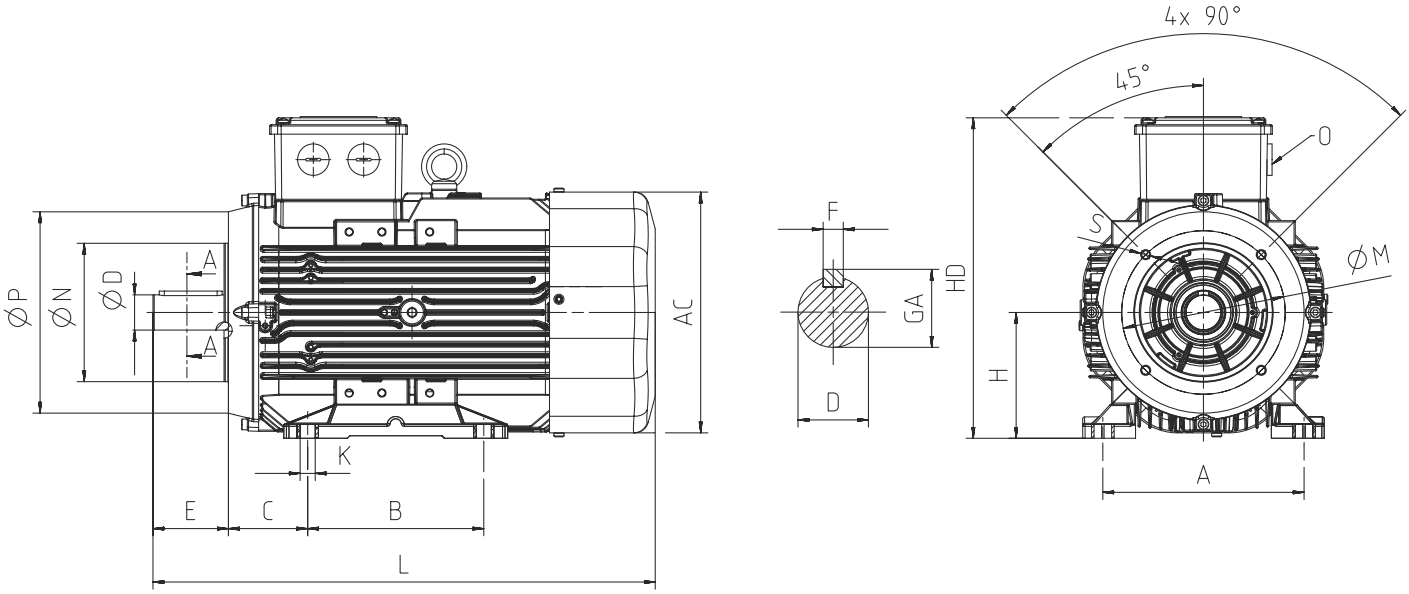

				Ana Boyutlar Main Dimensions			Ayaklı Motorlar Foot Mounted Motors					Mil Shaft				Rulman Bearing		Keçe Seal		Flanş (FC) (B14a) Flange (FC) (B14a)				
Güç Power (kW)	Kutup sayısı Number of Poles	Motor Tipi Motor Type	Gövde Tipi Housing Type	AC	L	O	B	A	H	HD	K	D(1)	E	GA	F(2)	Kasnak Tarafı Drive Side	Kasnak Tarafı Aksi Non drive Side	Kasnak Tarafı Drive Side	Kasnak Tarafı Aksi Non drive Side	P	N(3)	M	R	S
0,75	2	Q3H80M2C	Aluminium	158	268	1xM20	100	125	80	216	10	19	40	21,5	6	6204-ZZ	6204-ZZ	20*30*7	20*30*7	120	80	100	-	M6
0,75	4	Q3H80M4D	Aluminium	158	268	1xM20	100	125	80	216	10	19	40	21,5	6	6204-ZZ	6204-ZZ	20*30*7	20*30*7	120	80	100	-	M6
0,75	6	Q3H90L6C	Aluminium	172	344	1xM25	100-125	140	90	223	10	24	50	27,0	8	6305-ZZ	6205-ZZ	25*40*7	25*40*7	140	95	115	-	M8
1,1	2	Q3H80M2D	Aluminium	158	268	1xM20	100	125	80	216	10	19	40	21,5	6	6204-ZZ	6204-ZZ	20*30*7	20*30*7	120	80	100	-	M6
1,1	4	Q3H90L4C	Aluminium	158	303	1xM25	100-125	140	90	213	10	24	50	27,0	8	6305-ZZ	6204-ZZ	25*40*7	20*30*7	140	95	115	-	M8
1,1	6	Q3H90L6D	Aluminium	172	344	1xM25	100-125	140	90	223	10	24	50	27,0	8	6305-ZZ	6205-ZZ	25*40*7	25*40*7	140	95	115	-	M8
1,5	2	Q3H90L2C	Aluminium	158	303	1xM25	100-125	140	90	213	10	24	50	27,0	8	6305-ZZ	6204-ZZ	25*40*7	20*30*7	140	95	115	-	M8
1,5	4	Q3H90L4D	Aluminium	172	344	1xM25	100-125	140	90	223	10	24	50	27,0	8	6305-ZZ	6205-ZZ	25*40*7	25*40*7	140	95	115	-	M8
1,5	6	Q3H100L6D	Aluminium	191	400	1xM25	140	160	100	243	12	28	60	31,0	8	6306-ZZ	6205-ZZ	30*47*7	30*47*7	160	110	130	-	M8
2,2	2	Q3H90L2D	Aluminium	172	344	1xM25	100-125	140	90	223	10	24	50	27,0	8	6305-ZZ	6205-ZZ	25*40*7	25*40*7	140	95	115	-	M8
2,2	4	Q3H100L4C	Aluminium	172	384	1xM25	140	160	100	233	12	28	60	31,0	8	6306-ZZ	6205-ZZ	30*47*7	25*40*7	160	110	130	-	M8
2,2	6	Q3H112M6D	Aluminium	210	396	1xM25	140	190	112	265	12	28	60	31,0	8	6306-ZZ	6206-ZZ	30*47*7	30*47*7	160	110	130	-	M8
3	2	Q3H100L2D	Aluminium	172	349	1xM25	140	160	100	233	12	28	60	31,0	8	6306-ZZ	6205-ZZ	30*47*7	25*40*7	160	110	130	-	M8
3	4	Q3H100L4D	Aluminium	191	400	1xM25	140	160	100	243	12	28	60	31,0	8	6306-ZZ	6205-ZZ	30*47*7	30*47*7	160	110	130	-	M8
3	6	Q3H132S6A	Aluminium	260	481	1xM32	140-178	216	132	312	12	38	80	41,0	10	6208-ZZ	6208-ZZ	40*62*10	40*62*10	200	130	165	-	M10
4	2	Q3H112M2C	Aluminium	191	399	1xM25	140	190	112	254	12	28	60	31,0	8	6306-ZZ	6205-ZZ	30*47*7	25*40*7	160	110	130	-	M8
4	4	Q3H112M4D	Aluminium	210	396	1xM25	140	190	112	265	12	28	60	31,0	8	6306-ZZ	6206-ZZ	30*47*7	30*47*7	160	110	130	-	M8
4	6	Q3H132M6A	Aluminium	260	481	1xM32	140-178	216	132	312	12	38	80	41,0	10	6208-ZZ	6208-ZZ	40*62*10	40*62*10	200	130	165	-	M10
5,5	2	Q3H132S2C	Aluminium	210	422	1xM25	140-178	216	132	283	12	38	80	41,0	10	6208-ZZ	6206-ZZ	40*62*10	30*47*7	200	130	165	-	M10
5,5	4	Q3H132S4B	Aluminium	260	481	1xM32	140-178	216	132	312	12	38	80	41,0	10	6208-ZZ	6208-ZZ	40*62*10	40*62*10	200	130	165	-	M10
5,5	6	Q3H132M6B	Aluminium	260	481	1xM32	140-178	216	132	312	12	38	80	41,0	10	6208-ZZ	6208-ZZ	40*62*10	40*62*10	200	130	165	-	M10
7,5	2	Q3H132S2D	Aluminium	210	448	1xM25	140-178	216	132	283	12	38	80	41,0	10	6208-ZZ	6206-ZZ	40*62*10	30*47*7	200	130	165	-	M10
7,5	4	Q3H132M4D	Aluminium	260	481	1xM32	140-178	216	132	312	12	38	80	41,0	10	6208-ZZ	6208-ZZ	40*62*10	40*62*10	200	130	165	-	M10

(1) Toleranslar 28 mm'ye kadar DIN EN 50347 "j6", 28 mm ve üzeri "k6" / Tolerance DIN EN 50347 "j6" up to 28mm, "k6" above 28mm
(2) DIN 6885'e göre / According to DIN 6885
(3) Tolerans DIN EN 50347 "j6" / Tolerance DIN EN 50347 "j6"

BOYUTLAR - B14b, B34b / DIMENSION - B14b, B34b

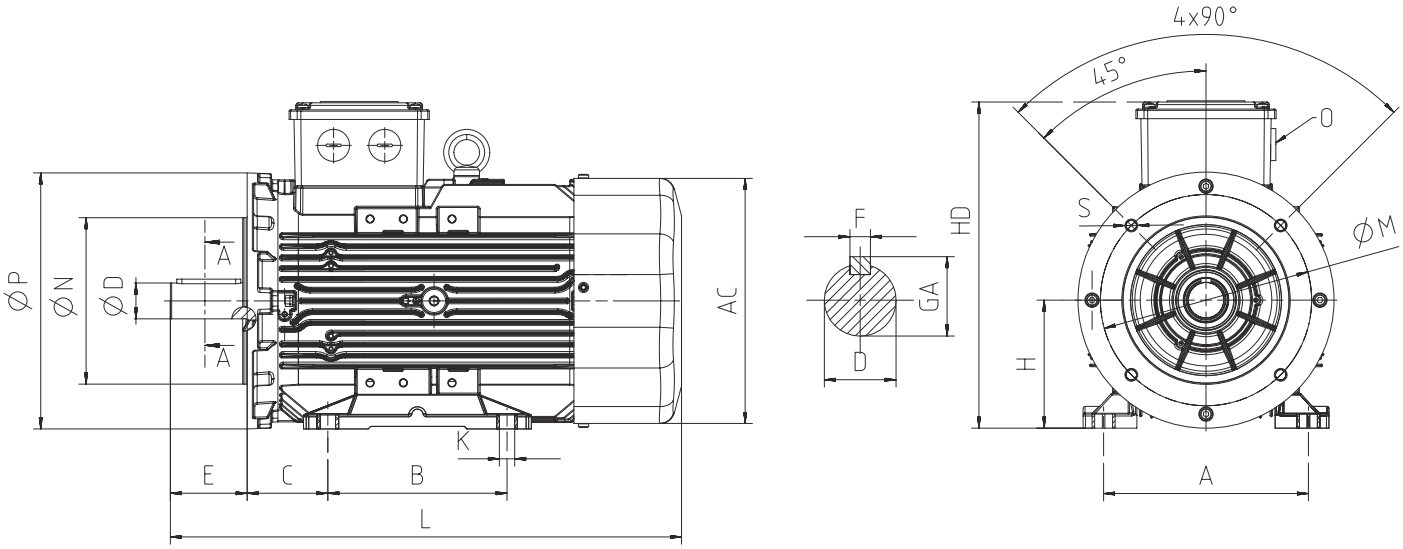

				Ana Boyutlar Main Dimensions			Ayaklı Motorlar Foot Mounted Motors					Mil Shaft				Rulman Bearing		Keçe Seal		Flanş (FB) (B14b) Flange (FB) (B14b)				
Güç Power (kW)	Kutup sayısı Number of Poles	Motor Tipi Motor Type	Gövde Tipi Housing Type	AC	L	O	B	A	H	HD	K	D(1)	E	GA	F(2)	Kasnak Tarafı Drive Side	Kasnak Tarafı Aksi Non drive Side	Kasnak Tarafı Drive Side	Kasnak Tarafı Aksi Non drive Side	P	N(3)	M	R	S
0,75	2	Q3H80M2C	Aluminium	158	268	1xM20	100	125	80	216	10	19	40	21,5	6	6204-ZZ	6204-ZZ	20*30*7	20*30*7	160	110	130	-	M8
0,75	4	Q3H80M4D	Aluminium	158	268	1xM20	100	125	80	216	10	19	40	21,5	6	6204-ZZ	6204-ZZ	20*30*7	20*30*7	160	110	130	-	M8
0,75	6	Q3H90L6C	Aluminium	172	344	1xM25	100-125	140	90	223	10	24	50	27,0	8	6305-ZZ	6205-ZZ	25*40*7	25*40*7	160	110	130	-	M8
1,1	2	Q3H80M2D	Aluminium	158	268	1xM20	100	125	80	216	10	19	40	21,5	6	6204-ZZ	6204-ZZ	20*30*7	20*30*7	160	110	130	-	M8
1,1	4	Q3H90L4C	Aluminium	158	303	1xM25	100-125	140	90	213	10	24	50	27,0	8	6305-ZZ	6204-ZZ	25*40*7	20*30*7	160	110	130	-	M8
1,1	6	Q3H90L6D	Aluminium	172	344	1xM25	100-125	140	90	223	10	24	50	27,0	8	6305-ZZ	6205-ZZ	25*40*7	25*40*7	160	110	130	-	M8
1,5	2	Q3H90L2C	Aluminium	158	303	1xM25	100-125	140	90	213	10	24	50	27,0	8	6305-ZZ	6204-ZZ	25*40*7	20*30*7	160	110	130	-	M8
1,5	4	Q3H90L4D	Aluminium	172	344	1xM25	100-125	140	90	223	10	24	50	27,0	8	6305-ZZ	6205-ZZ	25*40*7	25*40*7	160	110	130	-	M8
1,5	6	Q3H100L6D	Aluminium	191	400	1xM25	140	160	100	243	12	28	60	31,0	8	6306-ZZ	6205-ZZ	30*47*7	30*47*7	200	130	130	-	M10
2,2	2	Q3H90L2D	Aluminium	172	344	1xM25	100-125	140	90	223	10	24	50	27,0	8	6305-ZZ	6205-ZZ	25*40*7	25*40*7	260	110	130	-	M8
2,2	4	Q3H100L4C	Aluminium	172	384	1xM25	140	160	100	233	12	28	60	31,0	8	6306-ZZ	6205-ZZ	30*47*7	25*40*7	200	130	165	-	M10
2,2	6	Q3H112M6D	Aluminium	210	396	1xM25	140	190	112	265	12	28	60	31,0	8	6306-ZZ	6206-ZZ	30*47*7	30*47*7	200	130	165	-	M10
3	2	Q3H100L2D	Aluminium	172	349	1xM25	140	160	100	233	12	28	60	31,0	8	6306-ZZ	6205-ZZ	30*47*7	25*40*7	200	130	165	-	M10
3	4	Q3H100L4D	Aluminium	191	400	1xM25	140	160	100	243	12	28	60	31,0	8	6306-ZZ	6205-ZZ	30*47*7	30*47*7	200	130	165	-	M10
3	6	Q3H132S6A	Aluminium	260	481	1xM32	140-178	216	132	312	12	38	80	41,0	10	6208-ZZ	6208-ZZ	40*62*10	40*62*10	250	180	215	-	M12
4	2	Q3H112M2C	Aluminium	191	399	1xM25	140	190	112	254	12	28	60	31,0	8	6306-ZZ	6205-ZZ	30*47*7	25*40*7	200	130	165	-	M10
4	4	Q3H112M4D	Aluminium	210	396	1xM25	140	190	112	265	12	28	60	31,0	8	6306-ZZ	6206-ZZ	30*47*7	30*47*7	200	130	165	-	M10
4	6	Q3H132M6A	Aluminium	260	481	1xM32	140-178	216	132	312	12	38	80	41,0	10	6208-ZZ	6208-ZZ	40*62*10	40*62*10	250	180	215	-	M12
5,5	2	Q3H132S2C	Aluminium	210	422	1xM25	140-178	216	132	283	12	38	80	41,0	10	6208-ZZ	6206-ZZ	40*62*10	30*47*7	250	180	215	-	M12
5,5	4	Q3H132S4B	Aluminium	260	481	1xM32	140-178	216	132	312	12	38	80	41,0	10	6208-ZZ	6208-ZZ	40*62*10	40*62*10	250	180	215	-	M12
5,5	6	Q3H132M6B	Aluminium	260	481	1xM32	140-178	216	132	312	12	38	80	41,0	10	6208-ZZ	6208-ZZ	40*62*10	40*62*10	250	180	215	-	M12
7,5	2	Q3H132S2D	Aluminium	210	448	1xM25	140-178	216	132	283	12	38	80	41,0	10	6208-ZZ	6206-ZZ	40*62*10	30*47*7	250	180	215	-	M12
7,5	4	Q3H132M4D	Aluminium	260	481	1xM32	140-178	216	132	312	12	38	80	41,0	10	6208-ZZ	6208-ZZ	40*62*10	40*62*10	250	180	215	-	M12

(1) Toleranslar 28 mm'ye kadar DIN EN 50347 "j6", 28 mm ve üzeri "k6" / Tolerance DIN EN 50347 "j6" up to 28mm, "k6" above 28mm
(2) DIN 6885'e göre / According to DIN 6885
(3) Tolerans DIN EN 50347 "j6" / Tolerance DIN EN 50347 "j6"

ÜÇ FAZLI MOTORLAR - KOMPAKT
THREE PHASE MOTORS - COMPACT

ELEKTRİKSEL ÖZELLİKLER - 50 Hz / ELECTRICAL CHARACTERISTICS AT 50 Hz

	MOTOR TİPİ MOTOR TYPE	GÖVDE TİPİ HOUSING TYPE	NOMİNAL RATED VALUES					KALKIŞTAKİ DEĞERLER STARTING VALUES				Devrilme Momenti Oranı Breakdown Torque Ratio	VERİM* EFFICIENCY* η%			Cos φ	J	Ağırlık Weight (B3)	Ses Basınç Seviyesi Sound Pressure Level
			GÜÇ POWER		DEVİR SPEED	AKIM CURRENT	MOMENT TORQUE	AKIM CURRENT I_A / I_N		MOMENT TORQUE M_A / M_N									
			kW	HP	rpm	A	Nm	λ	Δ	λ	Δ	Mk/ Mn	4/4	3/4	2/4	4/4	kgm²	kg	dBA **
	2 kutup 3000 d/dak / 2 pole 3000 rpm																		
230/400V	Q3H80M2DE	Aluminium	1,5	2,0	2905	3,2	4,9	10,9	-	5	-	5,4	84,2	83,3	80,5	0,80	0,00224	15	59
230/400V	Q3H90L2E	Aluminium	3,0	4,0	2890	5,8	9,9	8,1	-	3	-	3,5	87,1	88,1	87,7	0,86	0,00318	19	63
400/690V	Q3H100L2DE	Aluminium	4,0	5,5	2936	8,0	13,0	3,6	10,9	1,6	4,8	5,7	88,1	88,1	85,8	0,82	0,00611	29	66
400/690V	Q3H112M2D	Aluminium	5,5	7,5	2920	10,5	18,1	3,5	10,5	1,2	3,7	5,1	89,2	89,0	87,2	0,86	0,00741	32	68
400/690V	Q3H112M2DE	Aluminium	7,5	10,0	2918	13,6	24,5	3,6	10,7	1,4	4,3	5,4	90,1	90,3	89,1	0,88	0,00921	42	69
400/690V	Q3H132M2A	Aluminium	11,0	15,0	2925	20,7	36,0	3,5	10,5	1,3	3,9	5,2	91,2	91,4	90,6	0,85	0,03489	61	69
400/690V	Q3H132M2B	Aluminium	15,0	20,0	2935	27,6	48,8	3,5	10,4	1,2	3,7	5,2	91,9	91,3	89,8	0,86	0,00402	77	71
400/690V	Q3H160L2D	Aluminium	22,0	30,0	2961	39,1	71,0	3,5	10,6	1,2	3,6	5,1	92,7	92,4	91,3	0,87	0,05539	114	70
400/690V	Q3H180M2B	Aluminium	30,0	40,0	2957	50,1	96,9	3,2	9,6	1,0	2,9	3,9	93,3	93,2	92,6	0,93	0,10277	148	77
400/690V	Q3H200L2DE	Aluminium	45,0	60,0	2964	75,2	145,0	3,6	10,7	1,0	3,0	2,7	94,0	93,3	92,8	0,92	0,14769	199	78
	4 kutup 1500 d/dak / 4 pole 1500 rpm																		
230/400V	Q3H80M4DE	Aluminium	1,1	1,5	1448	2,6	7,3	7,2	-	3,1	-	3,7	82,7	82,4	89,5	0,75	0,00306	14	48
230/400V	Q3H90L4DE	Aluminium	2,2	3,0	1453	5,4	14,4	9,5	-	5,0	-	5,5	86,7	84,3	80,6	0,68	0,00690	25	54
400/690V	Q3H100L4E	Aluminium	4,0	5,5	1445	8,8	26,4	8,6	-	3,5	-	4,2	88,6	87,1	85,6	0,75	0,01124	35	56
400/690V	Q3H112M4E	Aluminium	5,5	7,5	1443	11,25	36,4	2,8	8,3	1,0	3,1	3,8	89,6	89,2	88,3	0,80	0,01526	40	57
400/690V	Q3H132M4E	Aluminium	11,0	15,0	1470	19,2	71,3	2,7	8,0	0,7	2,1	3,8	91,4	91,5	90,4	0,90	0,05940	82	63
400/690V	Q3H160L4C	Aluminium	18,5	25,0	1474	39,5	119,9	2,5	7,4	0,8	2,3	3,5	92,6	91,9	91,2	0,74	0,10511	114	58
400/690V	Q3H180L4C	Aluminium	30,0	40,0	1475	54,8	194,2	2,5	7,6	0,8	2,3	2,8	93,6	93,2	92,3	0,85	0,22165	187	69

* IEC 60034-2-1' e göre / According to IEC 60034-2-1
** Ses Basınç Seviyeleri motordan 1m uzaklıktan ölçülmüştür. / The sound pressure measurements are taken 1m away from the motor
*** Tolerans +3 dBA / Tolerance +3 dBA

BOYUTLAR - B3 / DIMENSION - B3

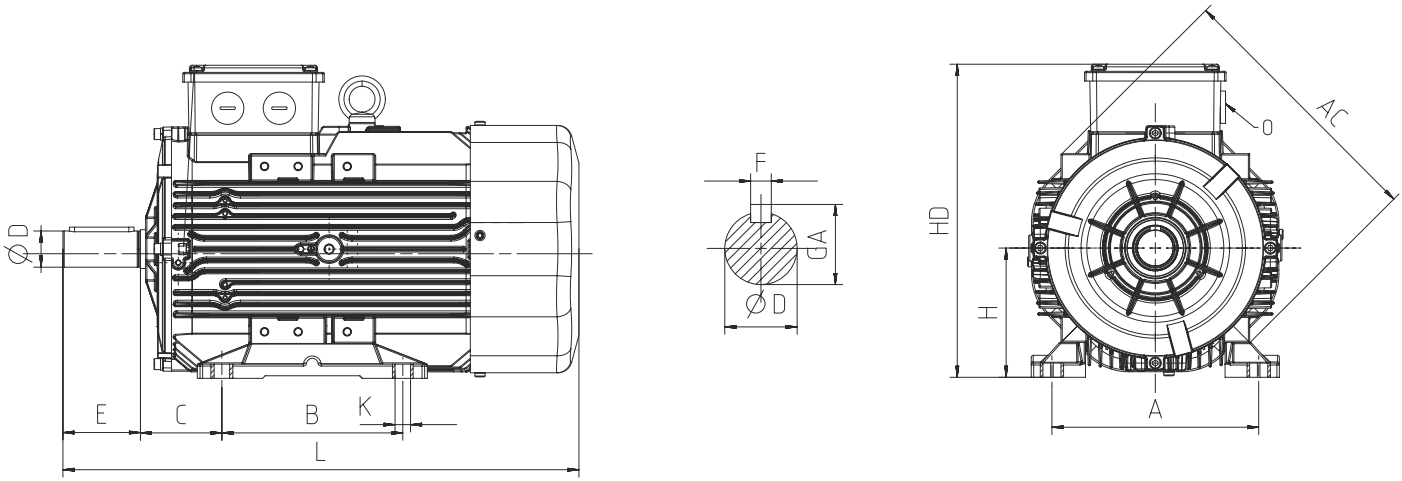

				Ana Boyutlar Main Dimensions			Ayaklı Motorlar Foot Mounted Motors						Mil Shaft				Rulman Bearing		Keçe Seal	
Güç Power (kW)	Kutup sayısı Number of Poles	Motor Tipi Motor Type	Gövde Tipi Housing Type	AC	L	O	B	A	H	HD	K	C	D(1)	E	GA	F(2)	Kasnak Tarafı Drive Side	Kasnak Tarafı Aksi Non drive Side	Kasnak Tarafı Drive Side	Kasnak Tarafı Aksi Non drive Side
1,1	4	Q3H80M4DE	Aluminium	158	268	1xM20	100	125	80	216	10	50	19	40	21,5	6	6204-ZZ	6204-ZZ	20*30*7	20*30*7
1,5	2	Q3H80M2DE	Aluminium	158	268	1xM20	100	125	80	216	10	50	19	40	21,5	6	6204-ZZ	6204-ZZ	20*30*7	20*30*7
2,2	4	Q3H90L4DE	Aluminium	172	344	1xM25	100-125	140	90	223	10	56	24	50	27,0	8	6305-ZZ	6205-ZZ	25*40*7	25*40*7
3,0	2	Q3H90L2E	Aluminium	172	344	1xM25	100-125	140	90	223	10	56	24	50	27,0	8	6305-ZZ	6205-ZZ	25*40*7	25*40*7
4,0	2	Q3H100L2DE	Aluminium	191	400	1xM25	140	160	100	243	12	63	28	60	31,0	8	6306-ZZ	6205-ZZ	30*47*7	30*47*7
4,0	4	Q3H100L4E	Aluminium	191	422	1xM25	140	160	100	243	12	63	28	60	31,0	8	6306-ZZ	6205-ZZ	30*47*7	30*47*7
5,5	2	Q3H112M2D	Aluminium	210	396	1xM25	140	190	112	265	12	70	28	60	31,0	8	6306-ZZ	6206-ZZ	30*47*7	30*47*7
5,5	4	Q3H112M4E	Aluminium	210	421	1xM25	140	190	112	265	12	70	28	60	31,0	8	6306-ZZ	6206-ZZ	30*47*7	30*47*7
7,5	2	Q3H112M2DE	Aluminium	210	421	1xM25	140	190	112	265	12	70	28	60	31,0	8	6306-ZZ	6206-ZZ	30*47*7	30*47*7
11,0	2	Q3H132M2A	Aluminium	260	481	1xM32	140-178	216	132	312	12	89	38	80	41,0	10	6208-ZZ	6208-ZZ	40*62*10	40*62*10
11,0	4	Q3H132M4E	Aluminium	260	520	1xM32	140-178	216	132	312	12	89	38	80	41,0	10	6309-ZZ	6209-ZZ	40*62*10	40*62*10
15,0	2	Q3H132M2B	Aluminium	260	520	1xM32	140-178	216	132	312	12	89	38	80	41,0	10	6208-ZZ	6208-ZZ	40*62*10	40*62*10
18,5	4	Q3H160L4C	Aluminium	305	591	1xM32	210-254	254	160	368	14,5	108	42	110	45,0	12	6309-ZZ	6209-ZZ	45*72*10	45*72*10
30,0	4	Q3H180L4C	Aluminium	349	696	1xM40	241-279	279	180	437	14,5	121	48	110	51,5	14	6310-ZZ	6310-ZZ	50*80*10	50*80*10
22,0	2	Q3H160L2D	Aluminium	305	591	1xM32	210-254	254	160	368	14,5	108	42	110	45,0	12	6309-ZZ	6209-ZZ	45*72*10	45*72*10
30,0	2	Q3H180M2B	Aluminium	349	696	1xM40	241-279	279	180	437	14,5	121	48	110	51,5	14	6310-ZZ	6310-ZZ	50*80*10	50*80*10
45,0	2	Q3H200L2DE	Aluminium	349	759	1xM50	267-305	318	200	455	18,5	133	55	110	59,0	16	6312-ZZ	6310-ZZ	60*90*10	60*90*10

(1) Toleranslar 28 mm'ye kadar DIN EN 50347 "j6", 28 mm ve üzeri "k6" / Tolerance DIN EN 50347 "j6" up to 28mm, "k6" above 28mm
(2) DIN 6885'e göre / According to DIN 6885

ÜÇ FAZLI MOTORLAR - KOMPAKT
THREE PHASE MOTORS - COMPACT

BOYUTLAR - B5, B35 / DIMENSION - B5, B35

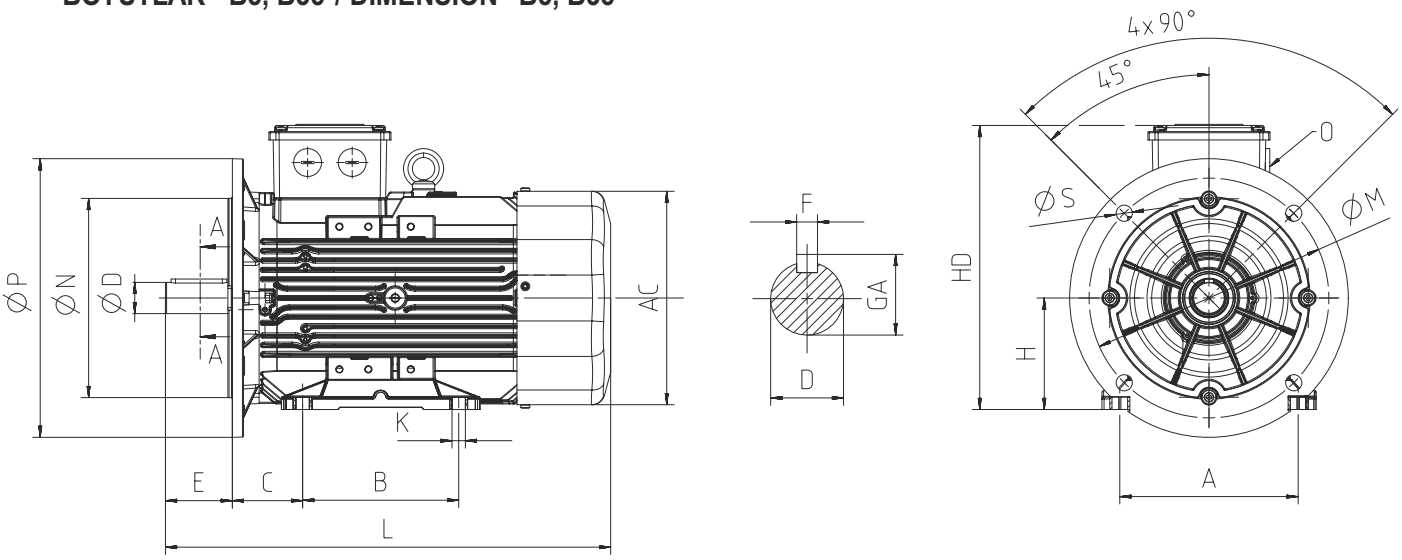

				Ana Boyutlar Main Dimensions			Ayaklı Motorlar Foot Mounted Motors					Mil Shaft				Rulman Bearing		Keçe Seal		Flanş (FA) (B5) Flange (FA) (B5)				
Güç Power (kW)	Kutup sayısı Number of Poles	Motor Tipi Motor Type	Gövde Tipi Housing Type	AC	L	O	B	A	H	HD	K	D(1)	E	GA	F(2)	Kasnak Tarafı Drive Side	Kasnak Tarafı Aksi Non drive Side	Kasnak Tarafı Drive Side	Kasnak Tarafı Aksi Non drive Side	P	N(3)	M	R	S
1,1	4	Q3H80M4DE	Aluminium	158	268	1xM20	100	125	80	216	10	19	40	21,5	6	6204-ZZ	6204-ZZ	20*30*7	20*30*7	200	130	165	-	12
1,5	2	Q3H80M2DE	Aluminium	158	268	1xM20	100	125	80	216	10	19	40	21,5	6	6204-ZZ	6204-ZZ	20*30*7	20*30*7	200	130	165	-	12
2,2	4	Q3H90L4DE	Aluminium	172	344	1xM25	100-125	140	90	223	10	24	50	27,0	8	6305-ZZ	6205-ZZ	25*40*7	25*40*7	200	130	165	-	12
3	2	Q3H90L2E	Aluminium	172	344	1xM25	100-125	140	90	223	10	24	50	27,0	8	6305-ZZ	6205-ZZ	25*40*7	25*40*7	200	130	165	-	12
4	2	Q3H100L2DE	Aluminium	191	400	1xM25	140	160	100	243	12	28	60	31,0	8	6306-ZZ	6205-ZZ	30*47*7	30*47*7	250	180	215	-	14,5
4	4	Q3H100L4E	Aluminium	191	422	1xM25	140	160	100	243	12	28	60	31,0	8	6306-ZZ	6205-ZZ	30*47*7	30*47*7	250	180	215	-	14,5
5,5	2	Q3H112M2D	Aluminium	210	396	1xM25	140	190	112	265	12	28	60	31,0	8	6306-ZZ	6206-ZZ	30*47*7	30*47*7	250	180	215	-	14,5
5,5	4	Q3H112M4E	Aluminium	210	421	1xM25	140	190	112	265	12	28	60	31,0	8	6306-ZZ	6206-ZZ	30*47*7	30*47*7	250	180	215	-	14,5
7,5	2	Q3H112M2DE	Aluminium	210	421	1xM25	140	190	112	265	12	28	60	31,0	8	6306-ZZ	6206-ZZ	30*47*7	30*47*7	250	180	215	-	14,5
11	2	Q3H132M2A	Aluminium	260	481	1xM32	140-178	216	132	312	12	38	80	41,0	10	6208-ZZ	6208-ZZ	40*62*10	40*62*10	300	230	265	-	14,5
11	4	Q3H132M4E	Aluminium	260	520	1xM32	140-178	216	132	312	12	38	80	41,0	10	6309-ZZ	6209-ZZ	40*62*10	40*62*10	300	230	265	-	14,5
15	2	Q3H132M2B	Aluminium	260	520	1xM32	140-178	216	132	312	12	38	80	41,0	10	6208-ZZ	6208-ZZ	40*62*10	40*62*10	300	230	265	-	14,5
18,5	4	Q3H160L4C	Aluminium	305	591	1xM32	210-254	254	160	368	14,5	42	110	45,0	12	6309-ZZ	6209-ZZ	45*72*10	45*72*10	350	250	300	-	18,5
30	4	Q3H180L4C	Aluminium	349	696	1xM40	241-279	279	180	437	14,5	48	110	51,5	14	6310-ZZ	6310-ZZ	50*80*10	50*80*10	350	250	300	-	18,5
22	2	Q3H160L2D	Aluminium	305	591	1xM32	210-254	254	160	368	14,5	42	110	45,0	12	6309-ZZ	6209-ZZ	45*72*10	45*72*10	350	250	300	-	18,5
30	2	Q3H180M2B	Aluminium	349	696	1xM40	241-279	279	180	437	14,5	48	110	51,5	14	6310-ZZ	6310-ZZ	50*80*10	50*80*10	350	250	300	-	18,5
45	2	Q3H200L2DE	Aluminium	349	759	1xM50	267-305	318	200	455	18,5	55	110	59,0	16	6312-ZZ	6310-ZZ	60*90*10	60*90*10	400	300	350	-	18,5

(1) Toleranslar 28 mm'ye kadar DIN EN 50347 "j6", 28 mm ve üzeri "k6" / Tolerance DIN EN 50347 "j6" up to 28mm, "k6" above 28mm
(2) DIN 6885'e göre / According to DIN 6885
(3) Tolerans DIN EN 50347 "j6" / Tolerance DIN EN 50347 "j6"

BOYUTLAR - B14a, B34a / DIMENSION - B14a, B34a

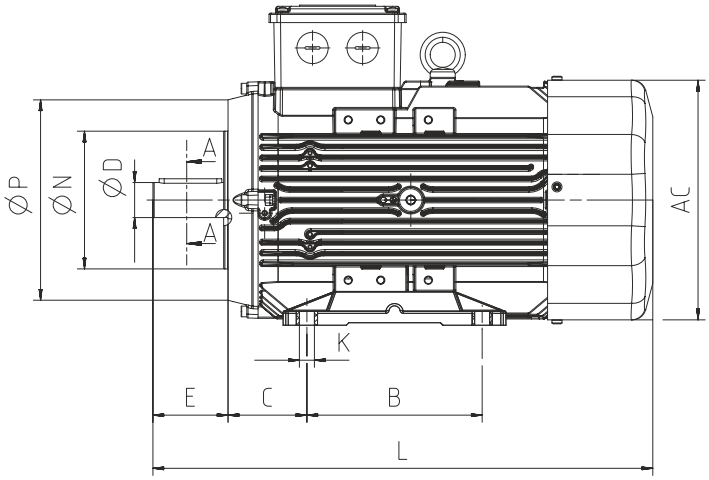

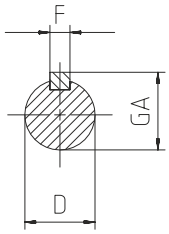

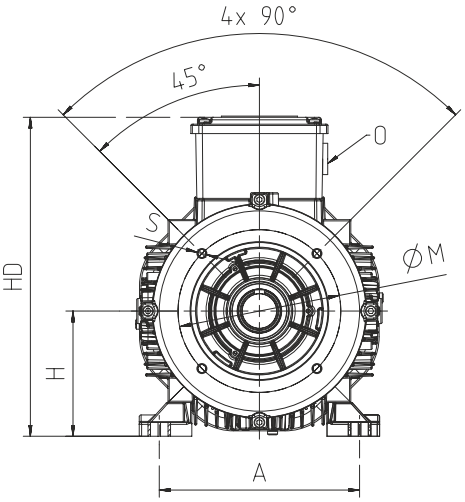

				Ana Boyutlar Main Dimensions			Ayaklı Motorlar Foot Mounted Motors					Mil Shaft				Rulman Bearing		Keçe Seal		Flanş (FC) (B14a) Flange (FC) (B14a)				
Güç Power (kW)	Kutup sayısı Number of Poles	Motor Tipi Motor Type	Gövde Tipi Housing Type	AC	L	O	B	A	H	HD	K	D(1)	E	GA	F(2)	Kasnak Tarafı Drive Side	Kasnak Tarafı Aksi Non drive Side	Kasnak Tarafı Drive Side	Kasnak Tarafı Aksi Non drive Side	P	N(3)	M	R	S
1,1	4	Q3H80M4DE	Aluminium	158	268	1xM20	100	125	80	216	10	19	40	21,5	6	6204-ZZ	6204-ZZ	20*30*7	20*30*7	120	80	100	-	M6
1,5	2	Q3H80M2DE	Aluminium	158	268	1xM20	100	125	80	216	10	19	40	21,5	6	6204-ZZ	6204-ZZ	20*30*7	20*30*7	120	80	100	-	M6
2,2	4	Q3H90L4DE	Aluminium	172	344	1xM25	100-125	140	90	223	10	24	50	27,0	8	6305-ZZ	6205-ZZ	25*40*7	25*40*7	140	95	115	-	M8
3	2	Q3H90L2E	Aluminium	172	344	1xM25	100-125	140	90	223	10	24	50	27,0	8	6305-ZZ	6205-ZZ	25*40*7	25*40*7	140	95	115	-	M8
4	2	Q3H100L2DE	Aluminium	191	400	1xM25	140	160	100	243	12	28	60	31,0	8	6306-ZZ	6205-ZZ	30*47*7	30*47*7	160	110	130	-	M8
4	4	Q3H100L4E	Aluminium	191	422	1xM25	140	160	100	243	12	28	60	31,0	8	6306-ZZ	6205-ZZ	30*47*7	30*47*7	160	110	130	-	M8
5,5	2	Q3H112M2D	Aluminium	210	396	1xM25	140	190	112	265	12	28	60	31,0	8	6306-ZZ	6206-ZZ	30*47*7	30*47*7	160	110	130	-	M8
5,5	4	Q3H112M4E	Aluminium	210	421	1xM25	140	190	112	265	12	28	60	31,0	8	6306-ZZ	6206-ZZ	30*47*7	30*47*7	160	110	130	-	M8
7,5	2	Q3H112M2DE	Aluminium	210	421	1xM25	140	190	112	265	12	28	60	31,0	8	6306-ZZ	6206-ZZ	30*47*7	30*47*7	160	110	130	-	M8
11	2	Q3H132M2A	Aluminium	260	481	1xM32	140-178	216	132	312	12	38	80	41,0	10	6208-ZZ	6208-ZZ	40*62*10	40*62*10	200	130	165	-	M10
11	4	Q3H132M4E	Aluminium	260	520	1xM32	140-178	216	132	312	12	38	80	41,0	10	6208-ZZ	6208-ZZ	40*62*10	40*62*10	200	130	165	-	M10
15	2	Q3H132M2B	Aluminium	260	520	1xM32	140-178	216	132	312	12	38	80	41,0	10	6208-ZZ	6208-ZZ	40*62*10	40*62*10	200	130	165	-	M10

(1) Toleranslar 28 mm'ye kadar DIN EN 50347 "j6", 28 mm ve üzeri "k6" / Tolerance DIN EN 50347 "j6" up to 28mm, "k6" above 28mm
(2) DIN 6885'e göre / According to DIN 6885
(3) Tolerans DIN EN 50347 "j6" / Tolerance DIN EN 50347 "j6"

ÜÇ FAZLI MOTORLAR - KOMPAKT
THREE PHASE MOTORS - COMPACT

BOYUTLAR - B14b, B34b / DIMENSION - B14b, B34b

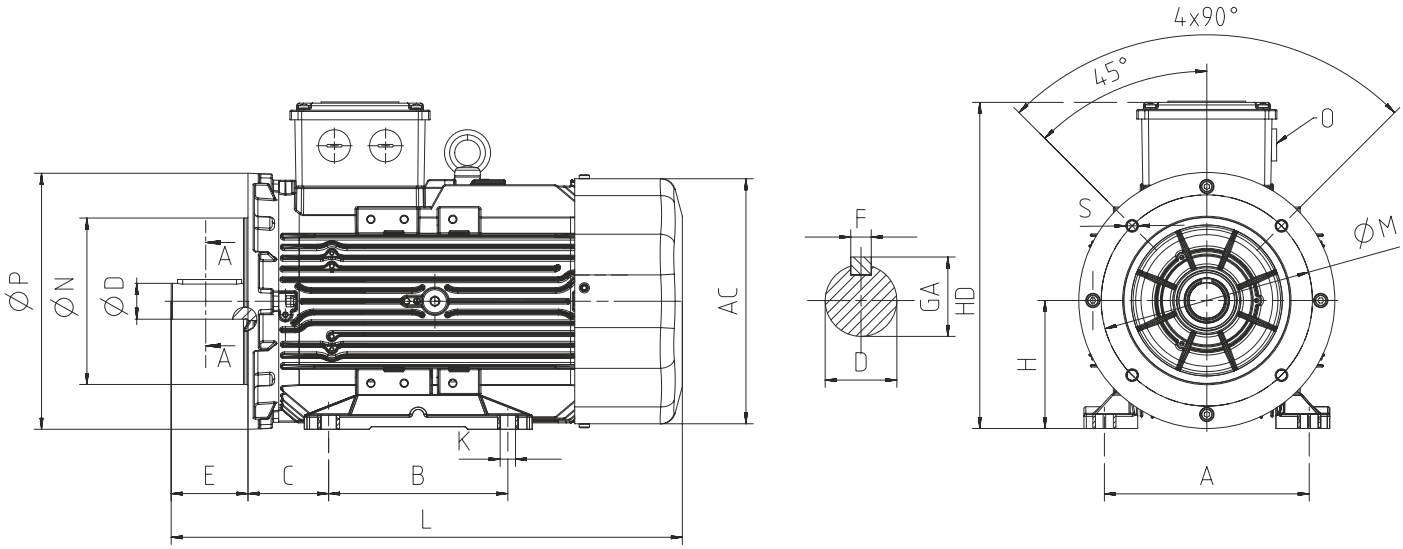

				Ana Boyutlar Main Dimensions			Ayaklı Motorlar Foot Mounted Motors					Mil Shaft				Rulman Bearing		Keçe Seal		Flanş (FB) (B14b) Flange (FB) (B14b)				
Güç Power (kW)	Kutup sayısı Number of Poles	Motor Tipi Motor Type	Gövde Tipi Housing Type	AC	L	O	B	A	H	HD	K	D(1)	E	GA	F(2)	Kasnak Tarafı Drive Side	Kasnak Tarafı Aksi Non drive Side	Kasnak Tarafı Drive Side	Kasnak Tarafı Aksi Non drive Side	P	N(3)	M	R	S
1,1	4	Q3H80M4DE	Aluminium	158	268	1xM20	100	125	80	216	10	19	40	21,5	6	6204-ZZ	6204-ZZ	20*30*7	20*30*7	160	110	130	-	M8
1,5	2	Q3H80M2DE	Aluminium	158	268	1xM20	100	125	80	216	10	19	40	21,5	6	6204-ZZ	6204-ZZ	20*30*7	20*30*7	160	110	130	-	M8
2,2	4	Q3H90L4DE	Aluminium	172	344	1xM25	100-125	140	90	223	10	24	50	27,0	8	6305-ZZ	6205-ZZ	25*40*7	25*40*7	160	110	130	-	M8
3	2	Q3H90L2E	Aluminium	172	344	1xM25	100-125	140	90	223	10	24	50	27,0	8	6305-ZZ	6205-ZZ	25*40*7	25*40*7	160	110	130	-	M8
4	2	Q3H100L2DE	Aluminium	191	400	1xM25	140	160	100	243	12	28	60	31,0	8	6306-ZZ	6205-ZZ	30*47*7	30*47*7	200	130	165	-	M10
4	4	Q3H100L4E	Aluminium	191	422	1xM25	140	160	100	243	12	28	60	31,0	8	6306-ZZ	6205-ZZ	30*47*7	30*47*7	200	130	165	-	M10
5,5	2	Q3H112M2D	Aluminium	210	396	1xM25	140	190	112	265	12	28	60	31,0	8	6306-ZZ	6206-ZZ	30*47*7	30*47*7	200	130	165	-	M10
5,5	4	Q3H112M4E	Aluminium	210	421	1xM25	140	190	112	265	12	28	60	31,0	8	6306-ZZ	6206-ZZ	30*47*7	30*47*7	200	130	165	-	M10
7,5	2	Q3H112M2DE	Aluminium	210	421	1xM25	140	190	112	265	12	28	60	31,0	8	6306-ZZ	6206-ZZ	30*47*7	30*47*7	200	130	165	-	M10
11	2	Q3H132M2A	Aluminium	260	481	1xM32	140-178	216	132	312	12	38	80	41,0	10	6208-ZZ	6208-ZZ	40*62*10	40*62*10	250	180	215	-	M12
11	4	Q3H132M4E	Aluminium	260	520	1xM32	140-178	216	132	312	12	38	80	41,0	10	6208-ZZ	6208-ZZ	40*62*10	40*62*10	250	180	215	-	M12
15	2	Q3H132M2B	Aluminium	260	520	1xM32	140-178	216	132	312	12	38	80	41,0	10	6208-ZZ	6208-ZZ	40*62*10	40*62*10	250	180	215	-	M12

(1) Toleranslar 28 mm'ye kadar DIN EN 50347 "j6", 28 mm ve üzeri "k6" / Tolerance DIN EN 50347 "j6" up to 28mm, "k6" above 28mm
(2) DIN 6885'e göre / According to DIN 6885
(3) Tolerans DIN EN 50347 "j6" / Tolerance DIN EN 50347 "j6"

IE2

ÜÇ FAZLI MOTORLAR
THREE PHASE MOTORS

ELEKTRİKSEL ÖZELLİKLER - 50 Hz / ELECTRICAL CHARACTERISTICS AT 50 Hz

	MOTOR TİPİ MOTOR TYPE	GÖVDE TİPİ HOUSING TYPE	NOMİNAL RATED VALUES					KALKIŞTAKİ DEĞERLER STARTING VALUES				Devrilme Momenti Oranı Breakdown Torque Ratio	VERİM* EFFICIENCY* η%			Cos φ	J	Ağırlık Weight (B3)	Ses Basınç Seviyesi Sound Pressure Level
			GÜÇ POWER		DEVİR SPEED	AKIM CURRENT	MOMENT TORQUE	AKIM CURRENT I_A / I_N		MOMENT TORQUE M_A / M_N									
			kW	HP	rpm	A	Nm	Y	Δ	Y	Δ	Mk/ Mn	4/4	3/4	2/4	4/4	kgm²	kg	dBA **
	2 kutup 3000 d/dak / 2 pole 3000 rpm																		
230/400V	Q2E63M2A	Aluminium	0,18	1/4	2810	0,4	0,6	4,7	-	2,1	-	2,3	59,1	63,8	58,5	0,85	0,00022	5	52
	Q2E63M2B	Aluminium	0,25	1/3	2820	0,6	0,8	5,6	-	2,7	-	2,7	64,7	66,2	63,5	0,84	0,00025	6	52
	Q2E71M2A	Aluminium	0,37	1/2	2850	0,8	1,2	8,1	-	4,0	-	4,2	69,5	69,6	67,3	0,80	0,00067	8	54
	Q2E71M2B	Aluminium	0,55	3/4	2880	1,2	1,8	8,2	-	4,1	-	4,3	74,1	74,3	74,2	0,82	0,00086	10	54
	Q2H80M2B	Aluminium	0,75	1,0	2850	1,7	2,5	6,4	-	2,8	-	3,3	77,4	77,6	74,4	0,82	0,00111	9	58
	Q2H80M2C	Aluminium	1,1	1,5	2860	2,5	3,7	6,7	-	2,8	-	3,3	79,6	79,8	77,0	0,81	0,00140	11	58
	Q2H90L2B	Aluminium	1,5	2,0	2875	3,8	5,0	8,0	-	3,9	-	4,4	81,3	80,4	76,6	0,74	0,00176	13	62
	Q2H90L2D	Aluminium	2,2	3,0	2870	4,7	7,3	9,1	-	3,9	-	4,4	83,2	82,8	81,3	0,83	0,00231	16	62
	Q2H100L2C	Aluminium	3,0	4,0	2887	6,3	9,9	7,3	-	2,4	-	2,9	84,6	85,4	84,2	0,83	0,00266	19	66
400/690V	Q2H112M2B	Aluminium	4,0	5,5	2900	8,0	13,2	3,1	9,3	1,1	3,2	4,0	85,8	86,1	84,5	0,85	0,00487	24	68
	Q2H132S2B	Aluminium	5,5	7,5	2915	10,6	18,0	3,5	10,6	1,5	4,4	5,3	87,0	87,1	84,9	0,86	0,00703	34	69
	Q2H132S2C	Aluminium	7,5	10,0	2900	14,6	24,7	3,5	10,6	1,3	3,8	4,6	88,1	88,6	87,6	0,85	0,00772	37	69
	Q2H160M2B	Aluminium	11,0	15,0	2923	21,2	35,9	3,1	9,2	1,1	3,3	4,8	89,4	89,9	88,4	0,83	0,03517	65	70
	Q2H160M2C	Aluminium	15,0	20,0	2915	30,0	49,2	3,2	9,6	1,3	3,9	5,1	90,3	90,6	89,6	0,80	0,04015	67	70
	Q2H160M2D	Aluminium	18,5	25,0	2930	30,8	60,3	2,7	8,0	0,6	1,9	3,6	90,9	91,7	91,1	0,95	0,04613	79	70
	Q2H180M2A	Aluminium	22,0	30,0	2955	40,9	71,2	3,5	10,6	1,2	3,6	5,2	91,3	92,0	90,7	0,84	0,05141	100	77
	Q2H200L2B	Aluminium	30,0	40,0	2955	51,5	97,1	2,8	8,5	0,8	2,4	3,6	92,0	92,5	91,8	0,91	0,08644	175	78
	Q2H200L2C	Aluminium	37,0	50,0	2965	66,2	119,6	3,4	10,1	1,0	3,1	4,5	92,5	92,5	91,2	0,87	0,10277	175	78
	Q2E225M2B	Aluminium	45,0	60,0	2960	82,1	145,2	2,9	8,7	0,8	2,4	2,9	92,9	92,6	91,1	0,85	0,23500	235	81
	Q2E250M2A	Cast Iron	55,0	75,0	2976	92,7	177,0	2,8	8,4	0,8	2,5	3,4	93,2	93,0	91,6	0,91	0,48700	486	82
	Q2EP280M2B	Cast Iron	75,0	100,0	2975	127,9	240,8	3,5	10,6	0,9	2,7	5,1	93,8	93,7	92,5	0,92	0,54000	576	84
	Q2EP280M2C	Cast Iron	90,0	125,0	2980	149,0	288,6	2,4	7,1	1,0	3,0	3,0	94,1	93,9	92,9	0,91	0,64500	585	84
	Q2EP315S2C	Cast Iron	110,0	127	2,975	185	353	2,6	7,8	0,7	2,2	2,4	94,3	94,3	93,1	0,91	1,43600	920	87
	Q2EP315M2C	Cast Iron	132,0	152	2,975	221	423	2,6	7,8	0,8	2,3	2,4	94,6	94,6	93,4	0,91	1,72300	970	87
	Q2EP315L2C	Cast Iron	160,0	184	2,975	268	513	2,5	7,5	0,8	2,3	2,4	94,8	94,8	93,6	0,91	1,95300	1170	87
	Q2EP315L2D	Cast Iron	200,0	230	2,975	334	643	2,7	8	0,8	2,4	2,6	95	95	93,8	0,91	2,52700	1200	87
	Q2EP355M2C	Cast Iron	250,0	280	2,985	422	799	2,3	7	0,7	2	2,4	95	95	93,8	0,90	3,92000	1690	87
	Q2EP355L2C	Cast Iron	315,0	353,0	2.985	532	1.007	2,5	7,4	0,7	2,0	2,3	95,0	95,0	93,8	0,90	4,17000	1.870	87
	Q2EP355L2D	Cast Iron	355,0	398,0	2985	599	1.135	2,5	7,5	0,6	1,8	2,1	95,0	95,0	93,8	0,90	4,44000	1953	87

* IEC 60034-2-1' e göre / According to IEC 60034-2-1
** Ses Basınç Seviyeleri motordan 1m uzaklıktan ölçülmüştür. / The sound pressure measurements are taken 1m away from the motor
*** Tolerans +3 dBA / Tolerance +3 dBA

	MOTOR TİPİ MOTOR TYPE	GÖVDE TİPİ HOUSING TYPE	NOMİNAL RATED VALUES					KALKIŞTAKİ DEĞERLER STARTING VALUES				Devrilme Momenti Oranı Breakdown Torque Ratio	VERİM* EFFICIENCY* η%			Cos φ	J	Ağırlık Weight (B3)	Ses Basınç Seviyesi Sound Pressure Level
			GÜÇ POWER		DEVİR SPEED	AKIM CURRENT	MOMENT TORQUE	AKIM CURRENT I_A / I_N		MOMENT TORQUE M_A / M_N									
			kW	HP	rpm	A	Nm	λ	Δ	λ	Δ	Mk/ Mn	4/4	3/4	2/4	4/4	kgm²	kg	dBA **
4 kutup 1500 d/dak / 4 pole 1500 rpm																			
230/400V	Q2E63M4A	Aluminium	0,12	1/6	1420	0,5	0,9	3,4	-	2,2	-	3,2	64,0	54,1	44,9	0,56	0,00022	5	41
	Q2E63M4B	Aluminium	0,18	1/4	1400	0,6	1,2	3,7	-	2,7	-	3,0	68,0	60,0	51,3	0,66	0,00026	6	41
	Q2E71M4A	Aluminium	0,25	1/3	1415	0,6	1,7	4,6	-	2,6	-	3,8	68,5	68,8	66,9	0,70	0,00095	9	45
	Q2E71M4B	Aluminium	0,37	1/2	1425	1,1	2,5	4,6	-	2,6	-	3,8	72,7	73,1	72,0	0,71	0,00095	9	45
	Q2H80M4B	Aluminium	0,55	3/4	1435	1,3	3,6	6,4	-	2,3	-	3,2	77,1	78,8	75,4	0,76	0,00175	10	49
	Q2H80M4C	Aluminium	0,75	1,0	1440	1,8	5,0	5,5	-	2,1	-	2,6	79,6	80,0	77,7	0,76	0,00216	11	49
	Q2H90L4C	Aluminium	1,10	1,5	1430	2,5	7,4	5,7	-	2,2	-	2,6	81,4	82,4	81,6	0,80	0,00267	13	54
	Q2H90L4C	Aluminium	1,50	2,0	1427	3,3	10,0	6,4	-	2,5	-	3,1	82,8	84,2	83,7	0,79	0,00328	15	54
	Q2H100L4B	Aluminium	2,20	3,0	1437	5,3	14,6	7,6	-	3,6	-	4,2	84,3	84,1	81,5	0,72	0,00521	21	55
	Q2H100L4C	Aluminium	3,00	4,0	1440	7,4	20,0	6,5	-	3,3	-	3,7	85,5	85,3	83,0	0,70	0,00694	25	55
400/690V	Q2H112M4C	Aluminium	4,00	5,5	1440	8,7	26,6	2,7	8,0	1,1	3,2	3,8	86,6	85,7	83,5	0,78	0,01085	31	58
	Q2H132S4A	Aluminium	5,50	7,5	1445	11,5	35,5	2,7	8,0	1,0	3,0	3,8	87,7	88,3	87,3	0,79	0,01414	38	59
	Q2H132M4C	Aluminium	7,50	10,0	1460	15,0	49,1	2,4	7,1	0,5	1,5	0,6	88,7	89,4	88,7	0,82	0,03560	54	62
	Q2H160M4C	Aluminium	11,00	15,0	1468	21,6	71,5	2,6	7,9	0,7	2,1	3,6	89,8	91,1	90,3	0,81	0,05468	79	63
	Q2H160L4B	Aluminium	15,00	20,0	1462	29,8	98,0	2,6	7,8	0,6	1,8	3,4	90,6	91,4	90,9	0,80	0,05940	83	63
	Q2H180M4A	Aluminium	18,50	25,0	1470	36,0	120,2	2,3	6,8	0,7	2,2	2,9	91,2	92,0	91,6	0,81	0,10513	110	67
	Q2H180M4B	Aluminium	22,00	30,0	1462	41,8	143,8	1,8	5,5	0,6	1,9	2,8	91,6	92,9	93,3	0,84	0,11398	118	67
	Q2H200L4C	Aluminium	30,00	40,0	1475	55,3	194,6	2,7	8,2	0,9	2,7	3,5	92,0	91,9	91,4	0,85	0,18660	195	70
	Q2E225M4A	Aluminium	37,00	50,0	1480	68,3	238,8	3,0	9,1	1,2	3,6	4,0	92,7	92,6	91,3	0,84	0,36420	263	71
	Q2E225M4B	Aluminium	45,00	60,0	1480	81,5	290,5	3,1	9,4	1,2	3,7	3,0	93,1	93,0	91,9	0,85	0,43500	280	71
	Q2E250M4A	Cast Iron	55,00	75,0	1486	104,8	353,5	2,4	7,2	0,8	2,3	3,0	93,5	93,7	93,3	0,81	0,36400	506	72
	Q2EP280M4B	Cast Iron	75,00	100,0	1485	134,2	485,7	2,6	7,8	1,0	2,9	3,4	94,0	93,9	93,2	0,86	1,06100	624	73
	Q2EP280M4C	Cast Iron	90,00	125,0	1486	163,5	584,2	2,6	7,8	1,0	2,9	3,3	94,2	94,6	94,2	0,85	1,14800	638	73
	Q2EP315S4C	Cast Iron	110,0	127,0	1.480	191	709	2,4	7,2	0,7	2,2	2,5	94,5	94,5	93,9	0,88	3,03500	925	70
	Q2EP315M4C	Cast Iron	132,0	152,0	1.480	229	851	2,3	7,0	0,7	2,1	2,4	94,7	94,7	94,1	0,88	3,41500	1.010	70
	Q2EP315L4C	Cast Iron	160,0	184,0	1.480	273	1.032	2,5	7,5	0,7	2,2	2,5	94,9	94,9	94,3	0,89	4,11900	1.080	76
	Q2EP315L4D	Cast Iron	200,0	230,0	1.480	341	1.290	2,5	7,5	0,8	2,3	2,5	95,1	95,1	94,5	0,89	5,20300	1.200	76
	Q2EP355M4C	Cast Iron	250,0	280,0	1.485	426	1.607	2,6	7,9	0,8	2,3	2,5	95,1	95,1	94,5	0,89	8,79000	1.720	76
	Q2EP355L4C	Cast Iron	315,0	353,0	1485	531	2,025	2,5	7,4	0,7	2,0	2,3	95,1	95,1	94,5	0,90	10,13300	1.920	87
	Q2EP355L4D	Cast Iron	355,0	398,0	1485	603	2,283	2,9	8,8	0,6	1,8	2,0	95,1	95,1	94,5	0,89	10,67800	1.953	87
6 kutup 1000 d/dak / 6 pole 1000 rpm																			
230/400V	Q2H90S6B	Aluminium	0,75	1,0	943	1,8	7,7	4,6	-	2,1	-	2,7	75,9	75,1	71,4	0,69	0,00383	16	53
	Q2H90L6C	Aluminium	1,10	1,5	938	3,0	11,2	2,8	-	2,4	-	2,8	78,1	78,0	75,1	0,69	0,00464	18	53
	Q2H100L6C	Aluminium	1,50	2,0	955	4,0	15,2	3,3	-	2,6	-	3,2	79,8	79,3	76,3	0,67	0,00871	26	56
	Q2H112M6C	Aluminium	2,20	3,0	942	5,4	22,4	5,2	-	2,0	-	2,6	81,8	81,5	79,5	0,72	0,00936	31	58
400/690V	Q2H132S6A	Aluminium	3,00	4,0	965	14,1	29,8	1,8	5,4	1,1	3,2	3,3	83,3	82,3	79,4	0,64	0,02950	47	62
	Q2H132M6A	Aluminium	4,00	5,5	970	10,4	39,8	1,9	5,8	0,7	2,2	2,6	84,6	83,5	80,7	0,65	0,03560	53	61
	Q2H132M6B	Aluminium	5,50	7,5	960	12,8	54,7	1,7	5,2	0,9	2,6	2,9	86,1	85,7	83,9	0,72	0,06420	67	60
	Q2H160M6B	Aluminium	7,50	10,0	970	18,9	74,6	2,1	6,2	1,2	3,6	3,8	87,2	84,3	81,7	0,66	0,07540	88	63
	Q2H160L6B	Aluminium	11,00	15,0	970	25,5	109,4	1,7	5,2	1,0	3,0	3,1	88,7	88,5	86,3	0,71	0,07040	99	63
	Q2H180L6A	Aluminium	15,00	20,0	970	31,5	146,9	1,8	5,1	0,6	1,8	2,0	89,7	89,5	8730,0	0,76	0,16677	115	69
	Q2H200L6B	Aluminium	18,50	25,0	981	41,6	179,8	2,0	5,9	0,7	2,1	2,6	90,4	90,5	89,6	0,70	0,18660	160	70
	Q2H200L6C	Aluminium	22,00	30,0	982	48,8	214,5	1,8	5,6	0,8	2,3	2,4	90,9	91,0	90,3	0,72	0,20643	171	70
	Q2E225M6B	Aluminium	30,00	40,0	975	57,0	287,6	1,9	5,7	0,6	1,7	2,5	91,7	91,6	90,7	0,83	0,49334	234	66

BOYUTLAR - B3 / DIMENSION - B3

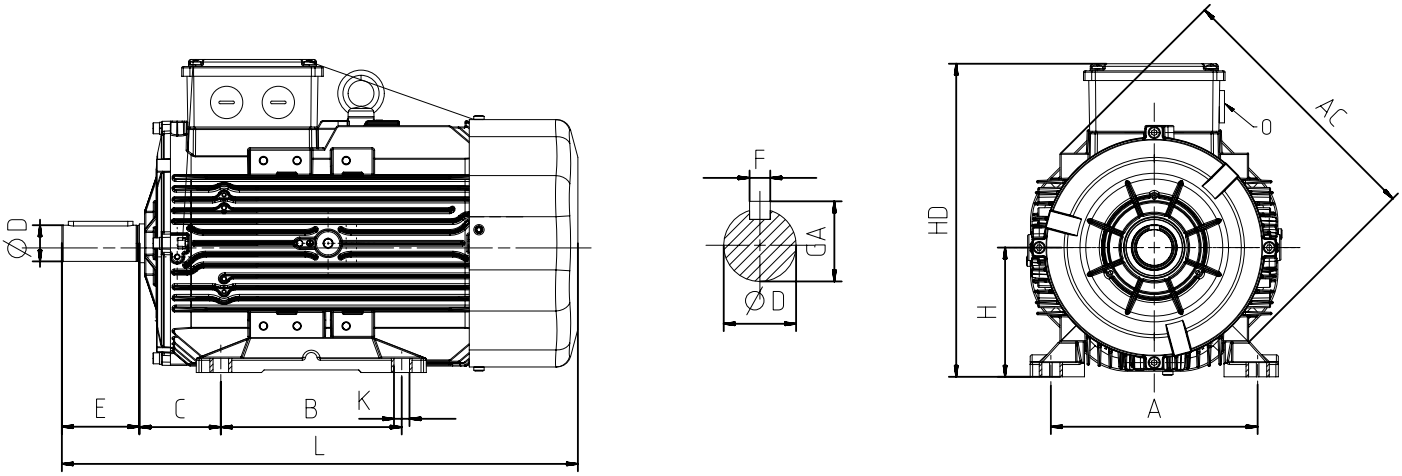

				Ana Boyutlar Main Dimensions			Ayaklı Motorlar Foot Mounted Motors						Mil Shaft				Rulman Bearing		Keçe Seal	
Güç Power (kW)	Kutup sayısı Number of Poles	Motor Tipi Motor Type	Gövde Tipi Housing Type	AC	L	O	B	A	H	HD	K	C	D(1)	E	GA	F(2)	Kasnak Tarafı Drive Side	Kasnak Tarafı Aksi Non drive Side	Kasnak Tarafı Drive Side	Kasnak Tarafı Aksi Non drive Side
0,12	4	Q2E63M4A	Aluminium	123	220	1xM20	80	100	63	162	7	40	11	23	12,5	4	6201-ZZ	6201-ZZ	12*22*7	12*22*7
0,18	2	Q2E63M2A	Aluminium	123	220	1xM20	80	100	63	162	7	40	11	23	12,5	4	6201-ZZ	6201-ZZ	12*22*7	12*22*7
0,18	4	Q2E63M4B	Aluminium	123	220	1xM20	80	100	63	162	7	40	11	23	12,5	4	6201-ZZ	6201-ZZ	12*22*7	12*22*7
0,25	2	Q2E63M2B	Aluminium	123	220	1xM20	80	100	63	162	7	40	11	23	12,5	4	6201-2Z	6201-2Z	12*22*7	12*22*7
0,25	4	Q2E71M4A	Aluminium	138	253	1xM20	90	112	71	190	7	45	14	30	16,0	5	6202-ZZ	6202-ZZ	15*24*5	15*24*5
0,37	2	Q2E71M2A	Aluminium	138	253	1xM20	90	112	71	190	7	45	14	30	16,0	5	6202-ZZ	6202-ZZ	15*24*5	15*24*5
0,37	4	Q2E71M4B	Aluminium	138	253	1xM20	90	112	71	190	7	45	14	30	16,0	5	6202-ZZ	6202-ZZ	15*24*5	15*24*5
0,55	2	Q2E71M2B	Aluminium	138	253	1xM20	90	112	71	190	7	45	14	30	16,0	5	6202-ZZ	6202-ZZ	15*24*5	15*24*5
0,55	4	Q2H80M4B	Aluminium	158	268	1xM20	100	125	80	216	10	50	19	40	21,5	6	6204-ZZ	6204-ZZ	20*30*7	20*30*7
0,75	2	Q2H80M2B	Aluminium	158	268	1xM20	100	125	80	216	10	50	19	40	21,5	6	6204-ZZ	6204-ZZ	20*30*7	20*30*7
0,75	4	Q2H80M4C	Aluminium	158	268	1xM20	100	125	80	216	10	50	19	40	21,5	6	6204-ZZ	6204-ZZ	20*30*7	20*30*7
0,75	6	Q2H90S6B	Aluminium	172	344	1xM25	100-125	140	90	223	10	56	24	50	27,0	8	6305-ZZ	6205-ZZ	25*40*7	25*40*7
1,1	2	Q2H80M2C	Aluminium	158	268	1xM20	100	125	80	216	10	50	19	40	21,5	6	6204-ZZ	6204-ZZ	20*30*7	20*30*7
1,1	4	Q2H90L4C	Aluminium	158	278	1xM25	100-125	140	90	213	10	56	24	50	27,0	8	6305-ZZ	6204-ZZ	25*40*7	20*30*7
1,1	6	Q2H90L6C	Aluminium	172	344	1xM25	100-125	140	90	223	10	56	24	50	27,0	8	6305-ZZ	6205-ZZ	25*40*7	25*40*7
1,5	2	Q2H90L2B	Aluminium	158	278	1xM25	100-125	140	90	213	10	56	24	50	27,0	8	6305-ZZ	6204-ZZ	25*40*7	20*30*7
1,5	4	Q2H90L4C	Aluminium	158	303	1xM25	100-125	140	90	213	10	56	24	50	27,0	8	6305-ZZ	6204-ZZ	25*40*7	20*30*7
1,5	6	Q2H100L6C	Aluminium	191	400	1xM25	140	160	100	243	12	63	28	60	31,0	8	6306-ZZ	6205-ZZ	30*47*7	30*47*7
2,2	2	Q2H90L2D	Aluminium	158	303	1xM25	100-125	140	90	213	10	56	24	50	27,0	8	6305-ZZ	6204-ZZ	25*40*7	20*30*7
2,2	4	Q2H100L4B	Aluminium	172	349	1xM25	140	160	100	233	12	63	28	60	31,0	8	6306-ZZ	6205-ZZ	30*47*7	25*40*7
2,2	6	Q2H112M6C	Aluminium	210	396	1xM25	140	190	112	265	12	70	28	60	31,0	8	6306-ZZ	6206-ZZ	30*47*7	30*47*7
3	2	Q2H100L2C	Aluminium	172	349	1xM25	140	160	100	233	12	63	28	60	31,0	8	6306-ZZ	6205-ZZ	30*47*7	25*40*7
3	4	Q2H100L4C	Aluminium	172	384	1xM25	140	160	100	233	12	63	28	60	31,0	8	6306-ZZ	6205-ZZ	30*47*7	25*40*7
3	6	Q2H132S6A	Aluminium	260	481	1xM32	140-178	216	132	312	12	89	38	80	41,0	10	6208-ZZ	6208-ZZ	40*62*10	40*62*10
4	2	Q2H112M2B	Aluminium	191	399	1xM25	140	190	112	254	12	70	28	60	31,0	8	6306-ZZ	6205-ZZ	30*47*7	25*40*7
4	4	Q2H112M4C	Aluminium	191	399	1xM25	140	190	112	254	12	70	28	60	31,0	8	6306-ZZ	6205-ZZ	30*47*7	25*40*7
4	6	Q2H132M6A	Aluminium	260	481	1xM32	140-178	216	132	312	12	89	38	80	41,0	10	6208-ZZ	6208-ZZ	40*62*10	40*62*10
5,5	2	Q2H132S2B	Aluminium	210	422	1xM25	140-178	216	132	283	12	89	38	80	41,0	10	6208-ZZ	6206-ZZ	40*62*10	30*47*7
5,5	4	Q2H132S4A	Aluminium	210	422	1xM25	140-178	216	132	283	12	89	38	80	41,0	10	6208-2Z	6206-2Z	40*62*10	30*47*7
5,5	6	Q2H132M6B	Aluminium	260	481	1xM32	140-178	216	132	312	12	89	38	80	41,0	10	6208-ZZ	6208-ZZ	40*62*10	40*62*10

(1) Toleranslar 28 mm'ye kadar DIN EN 50347 "j6", 28 mm ve üzeri "k6" / Tolerance DIN EN 50347 "j6" up to 28mm, "k6" above 28mm
(2) DIN 6885'e göre / According to DIN 6885

				Ana Boyutlar Main Dimensions			Ayaklı Motorlar Foot Mounted Motors						Mil Shaft				Rulman Bearing		Keçe Seal	
Güç Power (kW)	Kutup sayısı Number of Poles	Motor Tipi Motor Type	Gövde Tipi Housing Type	AC	L	O	B	A	H	HD	K	C	D(1)	E	GA	F(2)	Kasnak Tarafı Drive Side	Kasnak Tarafı Aksi Non drive Side	Kasnak Tarafı Drive Side	Kasnak Tarafı Aksi Non drive Side
7,5	2	Q2H132S2C	Aluminium	210	422	1xM25	140-178	216	132	283	12	89	38	80	41,0	10	6208-ZZ	6206-ZZ	40*62*10	30*47*7
7,5	4	Q2H132M4C	Aluminium	260	481	1xM32	140-178	216	132	312	12	89	38	80	41,0	10	6208-ZZ	6208-ZZ	40*62*10	40*62*10
7,5	6	Q2H160M6B	Aluminium	305	591	1xM32	210-254	254	160	368	14,5	108	42	110	45,0	12	6309-ZZ	6209-ZZ	45*72*10	45*72*10
11	2	Q2H160M2B	Aluminium	260	520	1xM32	210-254	254	160	351	14,5	108	42	110	45,0	12	6309-ZZ	6208-ZZ	45*72*10	40*62*10
11	4	Q2H160M4C	Aluminium	260	520	1xM32	210-254	254	160	351	14,5	108	42	110	45,0	12	6309-ZZ	6208-ZZ	45*72*10	40*62*10
11	6	Q2H160L6B	Aluminium	305	591	1xM32	210-254	254	160	368	14,5	108	42	110	45,0	12	6309-ZZ	6209-ZZ	45*72*10	45*72*10
15	2	Q2H160M2C	Aluminium	260	520	1xM32	210-254	254	160	351	14,5	108	42	110	45,0	12	6309-ZZ	6208-ZZ	45*72*10	40*62*10
15	4	Q2H160L4B	Aluminium	260	520	1xM32	210-254	254	160	351	14,5	108	42	110	45,0	12	6309-ZZ	6208-ZZ	45*72*10	40*62*10
15	6	Q2H180L6A	Aluminium	349	696	1xM40	241-279	279	180	437	14,5	121	48	110	51,5	14	6310-ZZ	6310-ZZ	50*80*10	50*80*10
18,5	2	Q2H160M2D	Aluminium	260	520	1xM32	210-254	254	160	351	14,5	108	42	110	45,0	12	6309-ZZ	6208-ZZ	45*72*10	40*62*10
18,5	4	Q2H180M4A	Aluminium	305	596	1xM32	241-279	279	180	398	14,5	121	48	110	51,5	14	6310-ZZ	6209-ZZ	50*80*10	45*72*10
18,5	6	Q2H200L6B	Aluminium	349	706	1xM50	305	318	200	455	18,5	133	55	110	59,0	16	6312-ZZ	6310-ZZ	60*90*10	60*90*10
22	2	Q2H180M2A	Aluminium	305	596	1xM32	241-279	279	180	398	14,5	121	48	110	51,5	14	6310-ZZ	6209-ZZ	50*80*10	45*72*10
22	4	Q2H180M4B	Aluminium	305	596	1xM32	241-279	279	180	398	14,5	121	48	110	51,5	14	6310-ZZ	6209-ZZ	50*80*10	45*72*10
22	6	Q2H200L6C	Aluminium	349	706	1xM50	267-305	318	200	455	18,5	133	55	110	59,0	16	6312-ZZ	6310-ZZ	60*90*10	60*90*10
30	2	Q2H200L2B	Aluminium	349	706	1xM50	267-305	318	200	455	18,5	133	55	110	59,0	16	6312-ZZ	6310-ZZ	60*90*10	60*90*10
30	4	Q2H200L4C	Aluminium	349	706	1xM50	267-305	318	200	455	18,5	133	55	110	59,0	16	6312-ZZ	6310-ZZ	60*90*10	60*90*10
30	6	Q2E225M6B	Aluminium	456	765	1xM50	286-311	356	225	485	18,5	149	60	140	64,0	18	6313-ZZ	6313-ZZ	65*100*13	65*100*13
37	2	Q2H200L2C	Aluminium	349	706	1xM50	305	318	200	455	18,5	133	55	110	59,0	16	6312-ZZ	6310-ZZ	60*90*10	60*90*10
37	4	Q2E225M4A	Aluminium	456	765	1xM50	286-311	356	225	485	18,5	149	60	140	64,0	18	6313-ZZ	6313-ZZ	65*100*13	65*100*13
45	2	Q2E225M2B	Aluminium	456	735	1xM50	286-311	356	225	485	18,5	149	55	110	59,0	16	6313-ZZ	6313-ZZ	65*100*13	65*100*13
45	4	Q2E225M4B	Aluminium	456	765	1xM50	286-311	356	225	485	18,5	149	60	140	64,0	18	6313-ZZ	6313-ZZ	65*100*13	65*100*13
55	2	Q2E250M2A	Aluminium	527	886	2*M50	349	406	250	615	24	149	60	140	64,0	18	6315-2Z	6313-2Z	75*112*12	65*100*13
55	2	Q2E250M2A	Cast Iron	489	893	1xM50	349	406	250	616	24	149	60	140	69,0	18	6316-Z	6316-Z	80*100*10	80*100*10
55	4	Q2E250M4A	Cast Iron	489	893	1xM50	349	406	250	616	24	149	65	140	69,0	18	6316-Z	6316-Z	80*100*10	80*100*10
75	2	Q2EP280M2B	Cast Iron	489	1025	1xM50	419	457	280	647	24	190	65	140	69,0	18	6316-Z	6316-Z	80*100*10	80*100*10
75	4	Q2EP280M4B	Cast Iron	489	1025	1xM50	419	457	280	647	24	190	75	140	79,5	20	6316-Z	6316-Z	80*100*10	80*100*10
90	2	Q2EP280M2C	Cast Iron	489	1025	1xM50	419	457	280	647	24	190	65	140	69,0	18	6316-Z	6316-Z	80*100*10	80*100*10
90	4	Q2EP280M4C	Cast Iron	489	1025	1xM50	419	457	280	647	24	190	75	140	79,5	20	6316-Z	6316-Z	80*100*10	80*100*10
110	2	Q2EP315S2C	Cast Iron	630	1180	2*M63	406	508	315	845	28	216	65	140	69	18	6317	6317	85*105*5.5	85*105*5.5
110	4	Q2EP315S4C	Cast Iron	630	1210	2*M63	406	508	315	845	28	216	80	170	85	22	6319	6319	95*115*5.5	95*115*5.5
132	2	Q2EP315M2C	Cast Iron	630	1290	2*M63	457	508	315	845	28	216	65	140	69	18	6317	6317	85*105*5.5	85*105*5.5
132	4	Q2EP315M4C	Cast Iron	630	1320	2*M63	457	508	315	845	28	216	80	170	85	22	6319	6319	95*115*5.5	95*115*5.5
160	2	Q2EP315L2C	Cast Iron	630	1290	2*M63	508	508	315	845	28	216	65	140	69	18	6317	6317	85*105*5.5	85*105*5.5
160	4	Q2EP315L4C	Cast Iron	630	1320	2*M63	508	508	315	845	28	216	80	170	85	22	6319	6319	95*115*5.5	95*115*5.5
200	2	Q2EP315L2D	Cast Iron	630	1290	2*M63	508	508	315	845	28	216	65	140	69	18	6317	6317	85*105*5.5	85*105*5.5
200	4	Q2EP315L4D	Cast Iron	630	1320	2*M63	508	508	315	845	28	216	80	170	85	22	6319	6319	95*115*5.5	95*115*5.5
250	2	Q2EP355M2C	Cast Iron	710	1486	4*M63	560	610	355	956	28	254	75	140	80	20	6317	6317	85*105*5.5	85*105*5.5
250	4	Q2EP355M4C	Cast Iron	710	1517	4*M63	560	610	355	956	28	254	95	170	100	25	6322	6322	110*130*5.5	110*130*5.5
315	2	Q2EP355L2C	Cast Iron	710	1486	4*M63	630	610	355	956	28	254	75	140	80	20	6317	6317	85*105*5.5	85*105*5.5
315	4	Q2EP355L4C	Cast Iron	710	1517	4*M63	630	610	355	956	28	254	95	170	100	25	6322	6322	110*130*5.5	110*130*5.5
355	2	Q2EP355L2D	Cast Iron	710	1486	4*M63	630	610	355	956	28	254	75	140	80	20	6317	6317	85*105*5.5	85*105*5.5
355	4	Q2EP355L4D	Cast Iron	710	1517	4*M63	630	610	355	956	28	254	95	170	100	25	6322	6322	110*130*5.5	110*130*5.5

(1) Toleranslar 28 mm'ye kadar DIN EN 50347 "j6", 28 mm ve üzeri "k6" / Tolerance DIN EN 50347 "j6" up to 28mm, "k6" above 28mm
(2) DIN 6885'e göre / According to DIN 6885

BOYUTLAR - B5, B35 / DIMENSION - B5, B35

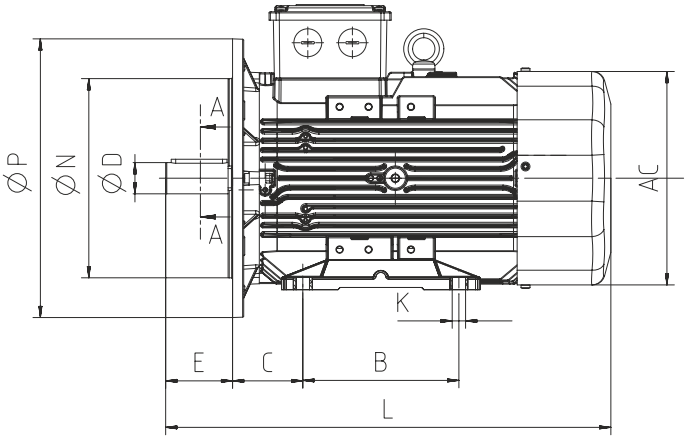

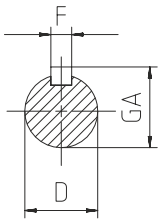

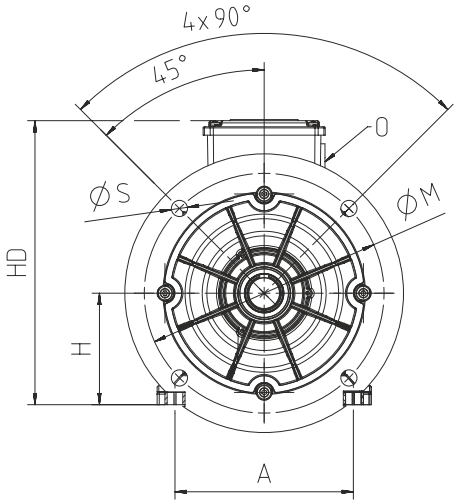

				Ana Boyutlar Main Dimensions			Ayaklı Motorlar Foot Mounted Motors					Mil Shaft				Rulman Bearing		Keçe Seal		Flanş (FA) (B5) Flange (FA) (B5)				
Güç Power (kW)	Kutup sayısı Number of Poles	Motor Tipi Motor Type	Gövde Tipi Housing Type	AC	L	O	B	A	H	HD	K	D(1)	E	GA	F(2)	Kasnak Tarafı Drive Side	Kasnak Tarafı Aksi Non drive Side	Kasnak Tarafı Drive Side	Kasnak Tarafı Aksi Non drive Side	P	N(3)	M	R	S
0,12	4	Q2E63M4A	Aluminium	123	220	1xM20	80	100	63	162	7	11	23	12,5	4	6201-ZZ	6201-ZZ	12*22*7	12*22*7	140	95	115	-	10
0,18	2	Q2E63M2A	Aluminium	123	220	1xM20	80	100	63	162	7	11	23	12,5	4	6201-ZZ	6201-ZZ	12*22*7	12*22*7	140	95	115	-	10
0,18	4	Q2E63M4B	Aluminium	123	220	1xM20	80	100	63	162	7	11	23	12,5	4	6201-ZZ	6201-ZZ	12*22*7	12*22*7	140	95	115	-	10
0,25	2	Q2E63M2B	Aluminium	123	220	1xM20	80	100	63	162	7	11	23	12,5	4	6201-2Z	6201-2Z	12*22*7	12*22*7	140	95	115	-	10
0,25	4	Q2E71M4A	Aluminium	138	253	1xM20	90	112	71	190	7	14	30	16,0	5	6202-ZZ	6202-ZZ	15*24*5	15*24*5	160	110	130	-	10
0,37	2	Q2E71M2A	Aluminium	138	253	1xM20	90	112	71	190	7	14	30	16,0	5	6202-ZZ	6202-ZZ	15*24*5	15*24*5	160	110	130	-	10
0,37	4	Q2E71M4B	Aluminium	138	253	1xM20	90	112	71	190	7	14	30	16,0	5	6202-ZZ	6202-ZZ	15*24*5	15*24*5	160	110	130	-	10
0,55	2	Q2E71M2B	Aluminium	138	253	1xM20	90	112	71	190	7	14	30	16,0	5	6202-ZZ	6202-ZZ	15*24*5	15*24*5	160	110	130	-	10
0,55	4	Q2H80M4B	Aluminium	158	268	1xM20	100	125	80	216	10	19	40	21,5	6	6204-ZZ	6204-ZZ	20*30*7	20*30*7	200	130	165	-	12
0,75	2	Q2H80M2B	Aluminium	158	268	1xM20	100	125	80	216	10	19	40	21,5	6	6204-ZZ	6204-ZZ	20*30*7	20*30*7	200	130	165	-	12
0,75	4	Q2H80M4C	Aluminium	158	268	1xM20	100	125	80	216	10	1 9	40	21,5	6	6204-ZZ	6204-ZZ	20*30*7	20*30*7	200	130	165	-	12
0,75	6	Q2H90S6B	Aluminium	172	344	1xM25	100-125	140	90	223	10	24	50	27,0	8	6305-ZZ	6205-ZZ	25*40*7	25*40*7	200	130	165	-	12
1,1	2	Q2H80M2C	Aluminium	158	268	1xM20	100	125	80	216	10	19	40	21,5	6	6204-ZZ	6204-ZZ	20*30*7	20*30*7	200	130	165	-	12
1,1	4	Q2H90L4C	Aluminium	158	278	1xM25	100-125	140	90	213	10	24	50	27,0	8	6305-ZZ	6204-ZZ	25*40*7	20*30*7	200	130	165	-	12
1,1	6	Q2H90L6B	Aluminium	172	344	1xM25	100-125	140	90	223	10	24	50	27,0	8	6305-ZZ	6205-ZZ	25*40*7	25*40*7	200	130	165	-	12
1,5	2	Q2H90L2B	Aluminium	158	278	1xM25	100-125	140	90	213	10	24	50	27,0	8	6305-ZZ	6204-ZZ	25*40*7	20*30*7	200	130	165	-	12
1,5	4	Q2H90L4C	Aluminium	158	303	1xM25	100-125	140	90	213	10	24	50	27,0	8	6305-ZZ	6204-ZZ	25*40*7	20*30*7	200	130	165	-	12
1,5	6	Q2H100L6C	Aluminium	191	400	1xM25	140	160	100	243	12	28	60	31,0	8	6306-ZZ	6205-ZZ	30*47*7	30*47*7	250	180	215	-	14,5
2,2	2	Q2H90L2D	Aluminium	158	303	1xM25	100-125	140	90	213	10	24	50	27,0	8	6305-ZZ	6204-ZZ	25*40*7	20*30*7	200	130	165	-	12
2,2	4	Q2H100L4B	Aluminium	172	349	1xM25	140	160	100	233	12	28	60	31,0	8	6306-ZZ	6205-ZZ	30*47*7	25*40*7	250	180	215	-	14,5
2,2	6	Q2H112M6C	Aluminium	210	396	1xM25	140	190	112	265	12	28	60	31,0	8	6306-ZZ	6206-ZZ	30*47*7	30*47*7	250	180	215	-	14,5
3	2	Q2H100L2C	Aluminium	172	349	1xM25	140	160	100	233	12	28	60	31,0	8	6306-ZZ	6205-ZZ	30*47*7	25*40*7	250	180	215	-	14,5
3	4	Q2H100L4C	Aluminium	172	384	1xM25	140	160	100	233	12	28	60	31,0	8	6306-ZZ	6205-ZZ	30*47*7	25*40*7	250	180	215	-	14,5
3	6	Q2H132S6A	Aluminium	260	481	1xM32	140-178	216	132	312	12	38	80	41,0	10	6208-ZZ	6208-ZZ	40*62*10	40*62*10	300	230	265	-	14,5
4	2	Q2H112M2B	Aluminium	191	399	1xM25	140	190	112	254	12	28	60	31,0	8	6306-ZZ	6205-ZZ	30*47*7	25*40*7	250	180	215	-	14,5
4	4	Q2H112M4C	Aluminium	191	399	1xM25	140	190	112	254	12	28	60	31,0	8	6306-ZZ	6205-ZZ	30*47*7	25*40*7	250	180	215	-	14,5
4	6	Q2H132M6A	Aluminium	260	481	1xM32	140-178	216	132	312	12	38	80	41,0	10	6208-ZZ	6208-ZZ	40*62*10	40*62*10	300	230	265	-	14,5
5,5	2	Q2H132S2B	Aluminium	210	422	1xM25	140-178	216	132	283	12	38	80	41,0	10	6208-ZZ	6206-ZZ	40*62*10	30*47*7	300	230	265	-	14,5
5,5	4	Q2H132S4A	Aluminium	210	422	1xM25	140-178	216	132	283	12	38	80	41,0	10	6208-2Z	6206-2Z	40*62*10	30*47*7	300	230	265	-	14,5
5,5	6	Q2H132M6B	Aluminium	260	481	1xM32	140-178	216	132	312	12	38	80	41,0	10	6208-ZZ	6208-ZZ	40*62*10	40*62*10	300	230	265	-	14,5

(1) Toleranslar 28 mm'ye kadar DIN EN 50347 "j6", 28 mm ve üzeri "k6" / Tolerance DIN EN 50347 "j6" up to 28mm, "k6" above 28mm
(2) DIN 6885'e göre / According to DIN 6885
(3) Tolerans DIN EN 50347 "j6" / Tolerance DIN EN 50347 "j6"

				Ana Boyutlar Main Dimensions			Ayaklı Motorlar Foot Mounted Motors					Mil Shaft				Rulman Bearing		Keçe Seal		Flanş (FA) (B5) Flange (FA) (B5)				
Güç Power (kW)	Kutup sayısı Number of Poles	Motor Tipi Motor Type	Gövde Tipi Housing Type	AC	L	O	B	A	H	HD	K	D(1)	E	GA	F(2)	Kasnak Tarafı Drive Side	Kasnak Tarafı Aksi Non drive Side	Kasnak Tarafı Drive Side	Kasnak Tarafı Aksi Non drive Side	P	N(3)	M	R	S
7,5	2	Q2H132S2C	Aluminium	210	422	1xM25	140-178	216	132	283	12	38	80	41,0	10	6208-ZZ	6206-ZZ	40*62*10	30*47*7	300	230	265	-	14,5
7,5	4	Q2H132M4C	Aluminium	260	481	1xM32	140-178	216	132	312	12	38	80	41,0	10	6208-ZZ	6208-ZZ	40*62*10	40*62*10	300	230	265	-	14,5
7,5	6	Q2H160M6B	Aluminium	305	591	1xM32	210-254	254	160	368	14,5	42	110	45,0	12	6309-ZZ	6209-ZZ	45*72*10	45*72*10	350	250	300	-	18,5
11	2	Q2H160M2B	Aluminium	260	520	1xM32	210-254	254	160	351	14,5	42	110	45,0	12	6309-ZZ	6208-ZZ	45*72*10	40*62*10	350	250	300	-	18,5
11	4	Q2H160M4C	Aluminium	260	520	1xM32	210-254	254	160	351	14,5	42	110	45,0	12	6309-ZZ	6208-ZZ	45*72*10	40*62*10	350	250	300	-	18,5
11	6	Q2H160L6B	Aluminium	305	591	1xM32	210-254	254	160	368	14,5	42	110	45,0	12	6309-ZZ	6209-ZZ	45*72*10	45*72*10	350	250	300	-	18,5
15	2	Q2H160M2C	Aluminium	260	520	1xM32	210-254	254	160	351	14,5	42	110	45,0	12	6309-ZZ	6208-ZZ	45*72*10	40*62*10	350	250	300	-	18,5
15	4	Q2H160L4B	Aluminium	260	520	1xM32	210-254	254	160	351	14,5	42	110	45,0	12	6309-ZZ	6208-ZZ	45*72*10	40*62*10	350	250	300	-	18,5
15	6	Q2H180L6A	Aluminium	349	696	1xM40	241-279	279	180	437	14,5	48	110	51,5	14	6310-ZZ	6310-ZZ	50*80*10	50*80*10	350	250	300	-	18,5
18,5	2	Q2H160M2D	Aluminium	260	520	1xM32	210-254	254	160	351	14,5	42	110	45,0	12	6309-ZZ	6208-ZZ	45*72*10	40*62*10	350	250	300	-	18,5
18,5	4	Q2H180M4A	Aluminium	305	596	1xM32	241-279	279	180	398	14,5	48	110	51,5	14	6310-ZZ	6209-ZZ	50*80*10	45*72*10	350	250	300	-	18,5
18,5	6	Q2H200L6B	Aluminium	349	706	1xM50	305	318	200	455	18,5	55	110	59,0	16	6312-ZZ	6310-ZZ	60*90*10	60*90*10	400	300	350	-	18,5
22	2	Q2H180M2A	Aluminium	305	596	1xM32	241-279	279	180	398	14,5	48	110	51,5	14	6310-ZZ	6209-ZZ	50*80*10	45*72*10	350	250	300	-	18,5
22	4	Q2H180M4B	Aluminium	305	596	1xM32	241-279	279	180	398	14,5	48	110	51,5	14	6310-ZZ	6209-ZZ	50*80*10	45*72*10	350	250	300	-	18,5
22	6	Q2H200L6C	Aluminium	349	706	1xM50	267-305	318	200	455	18,5	55	110	59,0	16	6312-ZZ	6310-ZZ	60*90*10	60*90*10	400	300	350	-	18,5
30	2	Q2H200L2B	Aluminium	349	706	1xM50	267-305	318	200	455	18,5	55	110	59,0	16	6312-ZZ	6310-ZZ	60*90*10	60*90*10	400	300	350	-	18,5
30	4	Q2H200L4C	Aluminium	349	706	1xM50	267-305	318	200	455	18,5	55	110	59,0	16	6312-ZZ	6310-ZZ	60*90*10	60*90*10	400	300	350	-	18,5
30	6	Q2E225M6B	Aluminium	456	765	1xM50	286-311	356	225	485	18,5	60	140	64,0	18	6313-ZZ	6313-ZZ	65*100*13	65*100*13	450	350	400	-	18,5
37	2	Q2H200L2C	Aluminium	349	706	1xM50	267-305	318	200	455	18,5	55	110	59,0	16	6312-ZZ	6310-ZZ	60*90*10	60*90*10	400	300	350	-	18,5
37	4	Q2E225M4A	Aluminium	456	765	1xM50	286-311	356	225	485	18,5	60	140	64,0	18	6313-ZZ	6313-ZZ	65*100*13	65*100*13	450	350	400	-	18,5
45	2	Q2E225M2B	Aluminium	456	735	1xM50	286-311	356	225	485	18,5	55	110	59,0	16	6313-ZZ	6313-ZZ	65*100*13	65*100*13	450	350	400	-	18,5
45	4	Q2E225M4B	Aluminium	456	765	1xM50	286-311	356	225	485	18,5	60	140	64,0	18	6313-ZZ	6313-ZZ	65*100*13	65*100*13	450	350	400	-	18,5
55	2	Q2E250M2A	Aluminium	527	886	2*M50	349	406	250	615	24	60	140	18	64	6315-2Z	6313-2Z	75*112*12	65*100*13	550	450	500	-	18,5
55	2	Q2E250M2A	Cast Iron	489	893	1xM50	349	406	250	616	24	60	140	69,0	18	6316-Z	6316-Z	80*100*10	80*100*10	550	450	500	-	18,5
55	4	Q2E250M4A	Cast Iron	489	893	1xM50	349	406	250	616	24	65	140	69,0	18	6316-Z	6316-Z	80*100*10	80*100*10	550	450	500	-	18,5
75	2	Q2EP280M2B	Cast Iron	489	1025	1xM50	419	457	280	647	24	65	140	69,0	18	6316-Z	6316-Z	80*100*10	80*100*10	550	450	500	-	18,5
75	4	Q2EP280M4B	Cast Iron	489	1025	1xM50	419	457	280	647	24	75	140	79,5	20	6316-Z	6316-Z	80*100*10	80*100*10	550	450	500	-	18,5
90	2	Q2EP280M2C	Cast Iron	489	1025	1xM50	419	457	280	647	24	65	140	69,0	18	6316-Z	6316-Z	80*100*10	80*100*10	550	450	500	-	18,5
90	4	Q2EP280M4C	Cast Iron	489	1025	1xM50	419	457	280	647	24	75	140	79,5	20	6316-Z	6316-Z	80*100*10	80*100*10	550	450	500	-	18,5
110	2	Q2EP315S2C	Cast Iron	630	1180	2*M63	406	508	315	845	28	216	65	140	69	6317	6317	85*105*5.5	85*105*5.5	660	550	600	-	24
110	4	Q2EP315S4C	Cast Iron	630	1210	2*M63	406	508	315	845	28	216	80	170	85	6319	6319	95*115*5.5	95*115*5.5	660	550	600	-	24
132	2	Q2EP315M2C	Cast Iron	630	1290	2*M63	457	508	315	845	28	216	65	140	69	6317	6317	85*105*5.5	85*105*5.5	660	550	600	-	24
132	4	Q2EP315M4C	Cast Iron	630	1320	2*M63	457	508	315	845	28	216	80	170	85	6319	6319	95*115*5.5	95*115*5.5	660	550	600	-	24
160	2	Q2EP315L2C	Cast Iron	630	1290	2*M63	508	508	315	845	28	216	65	140	69	6317	6317	85*105*5.5	85*105*5.5	660	550	600	-	24
160	4	Q2EP315L4C	Cast Iron	630	1320	2*M63	508	508	315	845	28	216	80	170	85	6319	6319	95*115*5.5	95*115*5.5	660	550	600	-	24
200	2	Q2EP315L2D	Cast Iron	630	1290	2*M63	508	508	315	845	28	216	65	140	69	6317	6317	85*105*5.5	85*105*5.5	660	550	600	-	24
200	4	Q2EP315L4D	Cast Iron	630	1320	2*M63	508	508	315	845	28	216	80	170	85	6319	6319	95*115*5.5	95*115*5.5	660	550	600	-	24
250	2	Q2EP355M2C	Cast Iron	710	1486	4*M63	560	610	355	956	28	254	75	140	80	6317	6317	85*105*5.5	85*105*5.5	800	680	740	-	24
250	4	Q2EP355M4C	Cast Iron	710	1517	4*M63	560	610	355	956	28	254	95	170	100	6322	6322	110*130*5.5	110*130*5.5	800	680	740	-	24
315	2	Q2EP355L2C	Cast Iron	710	1486	4*M63	630	610	355	956	28	254	75	140	80	6317	6317	85*105*5.5	85*105*5.5	800	680	740	-	24
315	4	Q2EP355L4C	Cast Iron	710	1517	4*M63	630	610	355	956	28	254	95	170	100	6322	6322	110*130*5.5	110*130*5.5	800	680	740	-	24
355	2	Q2EP355L2D	Cast Iron	710	1486	4*M63	630	610	355	956	28	254	75	140	80	6317	6317	85*105*5.5	85*105*5.5	800	680	740	-	24
355	4	Q2EP355L4D	Cast Iron	710	1517	4*M63	630	610	355	956	28	254	95	170	100	6322	6322	110*130*5.5	110*130*5.5	800	680	740	-	24

BOYUTLAR - B14a, B34a / DIMENSION - B14a, B34a

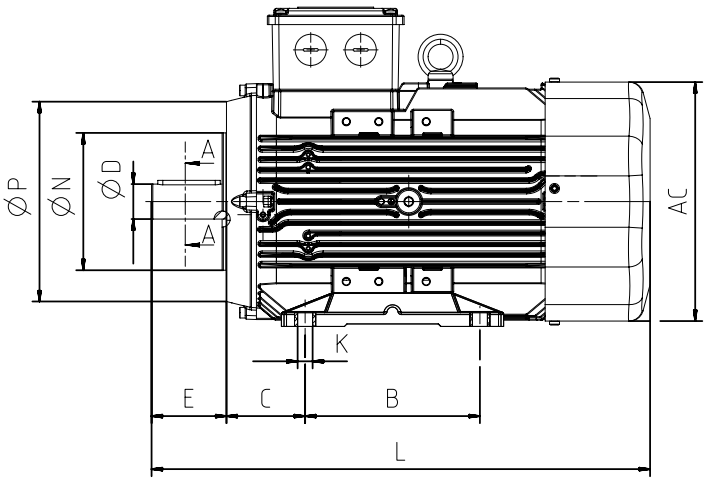

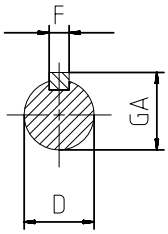

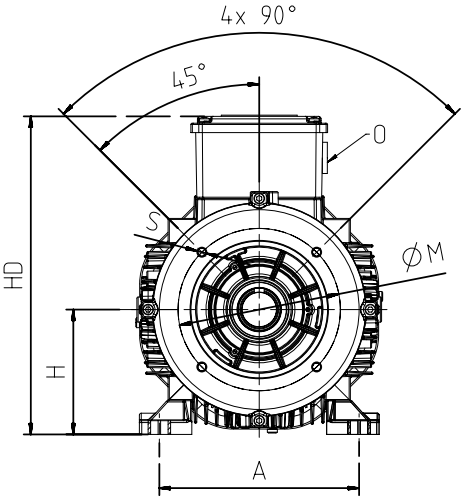

				Ana Boyutlar Main Dimensions			Ayaklı Motorlar Foot Mounted Motors					Mil Shaft				Rulman Bearing		Keçe Seal		Flanş (FC) (B14a) Flange (FC) (B14a)				
Güç Power (kW)	Kutup sayısı Number of Poles	Motor Tipi Motor Type	Gövde Tipi Housing Type	AC	L	O	B	A	H	HD	K	D(1)	E	GA	F(2)	Kasnak Tarafı Drive Side	Kasnak Tarafı Aksi Non drive Side	Kasnak Tarafı Drive Side	Kasnak Tarafı Aksi Non drive Side	P	N(3)	M	R	S
0,12	4	Q2E63M4A	Aluminium	123	220	1xM20	80	100	63	162	7	11	23	12,5	4	6201-ZZ	6201-ZZ	12*22*7	12*22*7	90	60	75	-	M5
0,18	2	Q2E63M2A	Aluminium	123	220	1xM20	80	100	63	162	7	11	23	12,5	4	6201-ZZ	6201-ZZ	12*22*7	12*22*7	90	60	75	-	M5
0,18	4	Q2E63M4B	Aluminium	123	220	1xM20	80	100	63	162	7	11	23	12,5	4	6201-ZZ	6201-ZZ	12*22*7	12*22*7	90	60	75	-	M5
0,25	2	Q2E63M2B	Aluminium	123	220	1xM20	80	100	63	162	7	11	23	12,5	4	6201-2Z	6201-2Z	12*22*7	12*22*7	90	60	75	-	M5
0,25	4	Q2E71M4A	Aluminium	138	253	1xM20	90	112	71	190	7	14	30	16,0	5	6202-ZZ	6202-ZZ	15*24*5	15*24*5	105	70	85	-	M6
0,37	2	Q2E71M2A	Aluminium	138	253	1xM20	90	112	71	190	7	14	30	16,0	5	6202-ZZ	6202-ZZ	15*24*5	15*24*5	105	70	85	-	M6
0,37	4	Q2E71M4B	Aluminium	138	253	1xM20	90	112	71	190	7	14	30	16,0	5	6202-ZZ	6202-ZZ	15*24*5	15*24*5	105	70	85	-	M6
0,55	2	Q2E71M2B	Aluminium	138	253	1xM20	90	112	71	190	7	14	30	16,0	5	6202-ZZ	6202-ZZ	15*24*5	15*24*5	105	70	85	-	M6
0,55	4	Q2H80M4B	Aluminium	158	268	1xM20	100	125	80	216	10	19	40	21,5	6	6204-ZZ	6204-ZZ	20*30*7	20*30*7	120	80	100	-	M6
0,75	2	Q2H80M2B	Aluminium	158	268	1xM20	100	125	80	216	10	19	40	21,5	6	6204-ZZ	6204-ZZ	20*30*7	20*30*7	120	80	100	-	M6
0,75	4	Q2H80M4C	Aluminium	158	268	1xM20	100	125	80	216	10	19	40	21,5	6	6204-ZZ	6204-ZZ	20*30*7	20*30*7	120	80	100	-	M6
0,75	6	Q2H90S6B	Aluminium	172	344	1xM25	100-125	140	90	223	10	24	50	27,0	8	6305-ZZ	6205-ZZ	25*40*7	25*40*7	140	95	115	-	M8
1,1	2	Q2H80M2C	Aluminium	158	268	1xM20	100	125	80	216	10	19	40	21,5	6	6204-ZZ	6204-ZZ	20*30*7	20*30*7	120	80	100	-	M6
1,1	4	Q2H90L4C	Aluminium	158	278	1xM25	100-125	140	90	213	10	24	50	27,0	8	6305-ZZ	6204-ZZ	25*40*7	20*30*7	140	95	115	-	M8
1,1	6	Q2H90L6C	Aluminium	172	344	1xM25	100-125	140	90	223	10	24	50	27,0	8	6305-ZZ	6205-ZZ	25*40*7	25*40*7	140	95	115	-	M8
1,5	2	Q2H90L2B	Aluminium	158	278	1xM25	100-125	140	90	213	10	24	50	27,0	8	6305-ZZ	6204-ZZ	25*40*7	20*30*7	140	95	115	-	M8
1,5	4	Q2H90L4C	Aluminium	158	303	1xM25	100-125	140	90	213	10	24	50	27,0	8	6305-ZZ	6204-ZZ	25*40*7	20*30*7	140	95	115	-	M8
1,5	6	Q2H100L6C	Aluminium	191	400	1xM25	140	160	100	243	12	28	60	31,0	8	6306-ZZ	6205-ZZ	30*47*7	30*47*7	160	110	130	-	M8
2,2	2	Q2H90L2D	Aluminium	158	303	1xM25	100-125	140	90	213	10	24	50	27,0	8	6305-ZZ	6204-ZZ	25*40*7	20*30*7	140	95	115	-	M8
2,2	4	Q2H100L4B	Aluminium	172	349	1xM25	140	160	100	233	12	28	60	31,0	8	6306-ZZ	6205-ZZ	30*47*7	25*40*7	160	110	130	-	M8
2,2	6	Q2H112M6C	Aluminium	210	396	1xM25	140	190	112	265	12	28	60	31,0	8	6306-ZZ	6206-ZZ	30*47*7	30*47*7	160	110	130	-	M8
3	2	Q2H100L2C	Aluminium	172	349	1xM25	140	160	100	233	12	28	60	31,0	8	6306-ZZ	6205-ZZ	30*47*7	25*40*7	160	110	130	-	M8
3	4	Q2H100L4C	Aluminium	172	384	1xM25	140	160	100	233	12	28	60	31,0	8	6306-ZZ	6205-ZZ	30*47*7	25*40*7	160	110	130	-	M8
3	6	Q2H132S6A	Aluminium	260	481	1xM32	140-178	216	132	312	12	38	80	41,0	10	6208-ZZ	6208-ZZ	40*62*10	40*62*10	200	130	165	-	M10
4	2	Q2H112M2B	Aluminium	191	399	1xM25	140	190	112	254	12	28	60	31,0	8	6306-ZZ	6205-ZZ	30*47*7	25*40*7	160	110	130	-	M8
4	4	Q2H112M4C	Aluminium	191	399	1xM25	140	190	112	254	12	28	60	31,0	8	6306-ZZ	6205-ZZ	30*47*7	25*40*7	160	110	130	-	M8
4	6	Q2H132M6A	Aluminium	260	481	1xM32	140-178	216	132	312	12	38	80	41,0	10	6208-ZZ	6208-ZZ	40*62*10	40*62*10	200	130	165	-	M10
5,5	2	Q2H132S2B	Aluminium	210	422	1xM25	140-178	216	132	283	12	38	80	41,0	10	6208-ZZ	6206-ZZ	40*62*10	30*47*7	200	130	165	-	M10
5,5	4	Q2H132S4A	Aluminium	210	422	1xM25	140-178	216	132	283	12	38	80	41,0	10	6208-2Z	6206-2Z	40*62*10	30*47*7	200	130	165	-	M10
5,5	6	Q2H132M6B	Aluminium	260	481	1xM32	140-178	216	132	312	12	38	80	41,0	10	6208-ZZ	6208-ZZ	40*62*10	40*62*10	200	130	165	-	M10
7,5	2	Q2H132S2C	Aluminium	210	422	1xM25	140-178	216	132	283	12	38	80	41,0	10	6208-ZZ	6206-ZZ	40*62*10	30*47*7	200	130	165	-	M10
7,5	4	Q2H132M4C	Aluminium	260	481	1xM32	140-178	216	132	312	12	38	80	41,0	10	6208-ZZ	6208-ZZ	40*62*10	40*62*10	200	130	165	-	M10

(1) Toleranslar 28 mm'ye kadar DIN EN 50347 "j6", 28 mm ve üzeri "k6" / Tolerance DIN EN 50347 "j6" up to 28mm, "k6" above 28mm
(2) DIN 6885'e göre / According to DIN 6885
(3) Tolerans DIN EN 50347 "j6" / Tolerance DIN EN 50347 "j6"

BOYUTLAR - B14b, B34b / DIMENSION - B14b, B34b

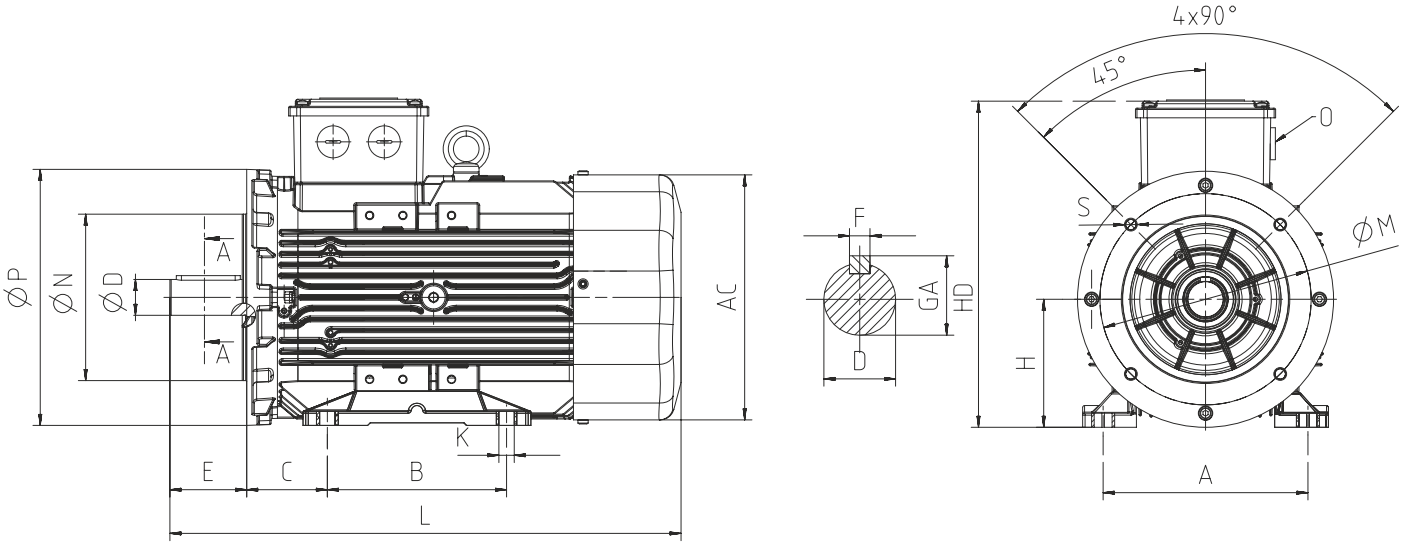

				Ana Boyutlar Main Dimensions			Ayaklı Motorlar Foot Mounted Motors					Mil Shaft				Rulman Bearing		Keçe Seal		Flanş (FB) (B14b) Flange (FB) (B14b)				
Güç Power (kW)	Kutup sayısı Number of Poles	Motor Tipi Motor Type	Gövde Tipi Housing Type	AC	L	O	B	A	H	HD	K	D(1)	E	GA	F(2)	Kasnak Tarafı Drive Side	Kasnak Tarafı Aksi Non drive Side	Kasnak Tarafı Drive Side	Kasnak Tarafı Aksi Non drive Side	P	N(3)	M	R	S
0,12	4	Q2E63M4A	Aluminium	123	220	1xM20	80	100	63	162	7	11	23	12,5	4	6201-ZZ	6201-ZZ	12*22*7	12*22*7	120	80	100	-	M6
0,18	2	Q2E63M2A	Aluminium	123	220	1xM20	80	100	63	162	7	11	23	12,5	4	6201-ZZ	6201-ZZ	12*22*7	12*22*7	120	80	100	-	M6
0,18	4	Q2E63M4B	Aluminium	123	220	1xM20	80	100	63	162	7	11	23	12,5	4	6201-ZZ	6201-ZZ	12*22*7	12*22*7	120	80	100	-	M6
0,25	2	Q2E63M2B	Aluminium	123	220	1xM20	80	100	63	162	7	11	23	12,5	4	6201-2Z	6201-2Z	12*22*7	12*22*7	120	80	100	-	M6
0,25	4	Q2E71M4A	Aluminium	138	253	1xM20	90	112	71	190	7	14	30	16,0	5	6202-ZZ	6202-ZZ	15*24*5	15*24*5	140	95	115	-	M8
0,37	2	Q2E71M2A	Aluminium	138	253	1xM20	90	112	71	190	7	14	30	16,0	5	6202-ZZ	6202-ZZ	15*24*5	15*24*5	140	95	115	-	M8
0,37	4	Q2E71M4B	Aluminium	138	253	1xM20	90	112	71	190	7	14	30	16,0	5	6202-ZZ	6202-ZZ	15*24*5	15*24*5	140	95	115	-	M8
0,55	2	Q2E71M2B	Aluminium	138	253	1xM20	90	112	71	190	7	14	30	16,0	5	6202-ZZ	6202-ZZ	15*24*5	15*24*5	140	95	115	-	M8
0,55	4	Q2H80M4B	Aluminium	158	268	1xM20	100	125	80	216	10	19	40	21,5	6	6204-ZZ	6204-ZZ	20*30*7	20*30*7	160	110	130	-	M8
0,75	2	Q2H80M2B	Aluminium	158	268	1xM20	100	125	80	216	10	19	40	21,5	6	6204-ZZ	6204-ZZ	20*30*7	20*30*7	160	110	130	-	M8
0,75	4	Q2H80M4C	Aluminium	158	268	1xM20	100	125	80	216	10	19	40	21,5	6	6204-ZZ	6204-ZZ	20*30*7	20*30*7	160	110	130	-	M8
0,75	6	Q2H90S6B	Aluminium	172	344	1xM25	100-125	140	90	223	10	24	50	27,0	8	6305-ZZ	6205-ZZ	25*40*7	25*40*7	160	110	130	-	M8
1,1	2	Q2H80M2C	Aluminium	158	268	1xM20	100	125	80	216	10	19	40	21,5	6	6204-ZZ	6204-ZZ	20*30*7	20*30*7	160	110	130	-	M8
1,1	4	Q2H90L4C	Aluminium	158	278	1xM25	100-125	140	90	213	10	24	50	27,0	8	6305-ZZ	6204-ZZ	25*40*7	20*30*7	160	110	130	-	M8
1,1	6	Q2H90L6C	Aluminium	172	344	1xM25	100-125	140	90	223	10	24	50	27,0	8	6305-ZZ	6205-ZZ	25*40*7	25*40*7	160	110	130	-	M8
1,5	2	Q2H90L2B	Aluminium	158	278	1xM25	100-125	140	90	213	10	24	50	27,0	8	6305-ZZ	6204-ZZ	25*40*7	20*30*7	160	110	130	-	M8
1,5	4	Q2H90L4C	Aluminium	158	303	1xM25	100-125	140	90	213	10	24	50	27,0	8	6305-ZZ	6204-ZZ	25*40*7	20*30*7	160	110	130	-	M8
1,5	6	Q2H100L6C	Aluminium	191	400	1xM25	140	160	100	243	12	28	60	31,0	8	6306-ZZ	6205-ZZ	30*47*7	30*47*7	200	130	165	-	M10
2,2	2	Q2H90L2D	Aluminium	158	303	1xM25	100-125	140	90	213	10	24	50	27,0	8	6305-ZZ	6204-ZZ	25*40*7	20*30*7	160	110	130	-	M8
2,2	4	Q2H100L4B	Aluminium	172	349	1xM25	140	160	100	233	12	28	60	31,0	8	6306-ZZ	6205-ZZ	30*47*7	25*40*7	200	130	165	-	M10
2,2	6	Q2H112M6C	Aluminium	210	396	1xM25	140	190	112	265	12	28	60	31,0	8	6306-ZZ	6206-ZZ	30*47*7	30*47*7	200	130	165	-	M10
3	2	Q2H100L2C	Aluminium	172	349	1xM25	140	160	100	233	12	28	60	31,0	8	6306-ZZ	6205-ZZ	30*47*7	25*40*7	200	130	165	-	M10
3	4	Q2H100L4C	Aluminium	172	384	1xM25	140	160	100	233	12	28	60	31,0	8	6306-ZZ	6205-ZZ	30*47*7	25*40*7	200	130	165	-	M10
3	6	Q2H132S6A	Aluminium	260	481	1xM32	140-178	216	132	312	12	38	80	41,0	10	6208-ZZ	6208-ZZ	40*62*10	40*62*10	250	180	215	-	M12
4	2	Q2H112M2B	Aluminium	191	399	1xM25	140	190	112	254	12	28	60	31,0	8	6306-ZZ	6205-ZZ	30*47*7	25*40*7	200	130	165	-	M10
4	4	Q2H112M4C	Aluminium	191	399	1xM25	140	190	112	254	12	28	60	31,0	8	6306-ZZ	6205-ZZ	30*47*7	25*40*7	200	130	165	-	M10
4	6	Q2H132M6A	Aluminium	260	481	1xM32	140-178	216	132	312	12	38	80	41,0	10	6208-ZZ	6208-ZZ	40*62*10	40*62*10	250	180	215	-	M12
5,5	2	Q2H132S2B	Aluminium	210	422	1xM25	140-178	216	132	283	12	38	80	41,0	10	6208-ZZ	6206-ZZ	40*62*10	30*47*7	250	180	215	-	M12
5,5	4	Q2H132S4A	Aluminium	210	422	1xM25	140-178	216	132	283	12	38	80	41,0	10	6208-2Z	6206-2Z	40*62*10	30*47*7	250	180	215	-	M12
5,5	6	Q2H132M6B	Aluminium	260	481	1xM32	140-178	216	132	312	12	38	80	41,0	10	6208-ZZ	6208-ZZ	40*62*10	40*62*10	250	180	215	-	M12
7,5	2	Q2H132S2C	Aluminium	210	422	1xM25	140-178	216	132	283	12	38	80	41,0	10	6208-ZZ	6206-ZZ	40*62*10	30*47*7	250	180	215	-	M12
7,5	4	Q2H132M4C	Aluminium	260	481	1xM32	140-178	216	132	312	12	38	80	41,0	10	6208-ZZ	6208-ZZ	40*62*10	40*62*10	250	180	215	-	M12

(1) Toleranslar 28 mm'ye kadar DIN EN 50347 "j6", 28 mm ve üzeri "k6" / Tolerance DIN EN 50347 "j6" up to 28mm, "k6" above 28mm
(2) DIN 6885'e göre / According to DIN 6885
(3) Tolerans DIN EN 50347 "j6" / Tolerance DIN EN 50347 "j6"

ÜÇ FAZLI MOTORLAR - KOMPAKT
THREE PHASE MOTORS - COMPACT

ELEKTRİKSEL ÖZELLİKLER - 50 Hz / ELECTRICAL CHARACTERISTICS AT 50 Hz

	MOTOR TİPİ MOTOR TYPE	GÖVDE TİPİ HOUSING TYPE	NOMİNAL RATED VALUES					KALKIŞTAKİ DEĞERLER STARTING VALUES				Devrilme Momenti Oranı Breakdown Torque Ratio	VERİM* EFFICIENCY* η%			Cos φ	J	Ağırlık Weight (B3)	Ses Basınç Seviyesi Sound Pressure Level
			GÜÇ POWER		DEVİR SPEED	AKIM CURRENT	MOMENT TORQUE	AKIM CURRENT I_A / I_N		MOMENT TORQUE M_A / M_N									
			kW	HP	rpm	A	Nm	λ	Δ	λ	Δ	Mk/ Mn	4/4	3/4	2/4	4/4	kgm²	kg	dBA **
2 kutup 3000 d/dak / 2 pole 3000 rpm																			
230/400V	Q2H80M2D	Aluminium	1,5	2,0	2875	3,8	5,0	8,0	-	3,9	-	4,4	81,3	80,4	76,6	0,74	0,00169	12	58
230/400V	Q2H80M2DE	Aluminium	2,2	3,0	2870	4,7	7,3	9,1	-	3,9	-	4,4	83,2	82,8	81,3	0,83	0,00224	16	59
230/400V	Q2H90L2D	Aluminium	3,0	4,0	2887	6,3	9,9	7,3	-	2,4	-	2,9	84,6	85,4	84,2	0,83	0,00283	19	61
400/690V	Q2HS100L2C	Aluminium	4,0	5,5	2913	8,2	13,2	3,6	10,8	1,4	4,2	4,8	85,8	87,0	86,1	0,82	0,00381	24	66
400/690V	Q2HS112M2C	Aluminium	5,5	7,5	2910	10,6	18,1	3,6	10,9	1,3	3,8	4,5	87,0	87,5	86,2	0,86	0,00637	29	68
400/690V	Q2HS112M2D	Aluminium	7,5	10,0	2895	14.1	24,8	3,4	10,3	1,3	3,9	4,6	88,1	89,0	88,7	0,88	0,00751	30	68
400/690V	Q2H132M2A	Aluminium	11,0	15,0	2923	21.3	35,9	3,1	9,2	1,1	3,3	4,8	89,4	89,9	88,4	0,83	0,03489	57	69
400/690V	Q2H132M2B	Aluminium	15,0	20,0	2915	30,0	49,2	3,2	9,6	1,3	3,9	5,1	90,3	90,6	89,6	0,80	0,03490	65	69
400/690V	Q2H132M2C	Aluminium	18,5	15,0	2930	30,8	60,3	2,7	8,0	0,6	1,9	3,6	90,9	91,7	91,1	0,95	0,04685	77	70
400/690V	Q2H160L2C	Aluminium	22,0	30,0	2955	40,9	71,2	3,5	10,4	1,2	3,6	5,2	91,3	92,0	90,7	0,84	0,04808	96	71
400/690V	Q2H180M2B	Aluminium	30,0	37,0	2955	51,5	97,1	2,8	8,5	0,8	2,4	3,6	92,0	92,5	91,8	0,91	0,08643	128	77
400/690V	Q2H180M2C	Aluminium	37,0	50,0	2965	66,2	119,6	3,4	10,1	1,0	3,1	4,5	92,5	92,5	91,2	0,87	0,10277	145	77
400/690V	Q2H200L2D	Aluminium	45,0	60,0	2960	76,0	145,1	3,3	9,8	0,9	2,8	5,3	92,9	93,4	92,7	0,92	0,11910	166	78
400/690V	Q2E225M2C	Aluminium	55,0	75,0	2970	96,6	176,9	3,5	10,6	1,0	3,0	7,1	93,2	93,7	92,4	0,88	0,29500	244	80
400/690V	Q2EP250M2C	Cast Iron	75,0	100,0	2975	127,9	240,8	3,5	10,6	0,9	2,7	6,8	93,8	93,7	92,5	0,92	0,54000	565	81
400/690V	Q2EP280M2D	Cast Iron	110,0	150,0	2980	192,0	352,4	2,6	7,7	1,0	2,9	3,4	94,1	93,9	92,9	0,88	0,70200	640	82
4 kutup 1500 d/dak / 4 pole 1500 rpm																			
230/400V	Q2H80M4D	Aluminium	1,1	1,5	1430	2,5	7,4	5,7	-	2,2	-	2,6	81,4	82,4	81,6	0,80	0,00260	12	48
230/400V	Q2H80M4DE	Aluminium	1,5	2,0	1427	3,3	10,0	6,4	-	2,5	-	3,1	82,8	84,2	83,7	0,79	0,00306	14	48
230/400V	Q2H90L4D	Aluminium	2,2	3,0	1437	5,3	14,6	7,6	-	3,6	-	4,2	84,3	84,1	81,5	0,72	0,00526	18	52
230/400V	Q2H90L4DE	Aluminium	3,0	4,0	1440	7,4	20,0	6,5	-	3,3	-	3,7	85,5	85,3	83,0	0,70	0,00690	25	53
230/400V	Q2H100L4D	Aluminium	4,0	5,5	1440	8,7	26,6	2,7	8,0	1,1	3,2	3,8	86,6	85,7	83,5	0,78	0,01058	31	57
230/400V	Q2H112M4D	Aluminium	5,5	7,5	1445	11,6	35,5	2,7	8,0	1,0	3,0	3,8	87,7	88,3	87,3	0,79	0,01382	38	58
400/690V	Q2H132M4D	Aluminium	11,0	15,0	1468	21,6	71,5	2,6	7,9	0,7	2,1	3,6	89,8	91,1	90,3	0,81	0,05440	76	61
400/690V	Q2H132M4E	Aluminium	15,0	20,0	1462	29,8	98,0	2,6	7,8	0,6	1,8	3,4	90,6	91,4	90,9	0,80	0,05940	81	63
400/690V	Q2H160L4B	Aluminium	18,5	15,0	1470	36,0	120,2	2,3	6,8	0,7	2,2	2,9	91,2	92,0	91,6	0,81	0,09005	101	57
400/690V	Q2H160L4C	Aluminium	22,0	30,0	1462	41,8	143,8	1,8	5,5	0,6	1,9	2,8	91,6	92,9	93,3	0,84	0,11068	115	58
400/690V	Q2H180L4C	Aluminium	30,0	40,0	1475	55,3	194,6	2,7	8,2	0,9	2,7	3,5	92,0	91,9	91,4	0,85	0,14694	143	70
400/690V	Q2H200L4D	Aluminium	37,0	50,0	1476	72,5	240,8	2,8	8,3	0,9	2,8	3,7	92,7	93,2	92,8	0,79	0,26440	177	71
400/690V	Q2EP250M4E	Cast Iron	75,0	100,0	1485	134,2	485,7	2,6	7,8	1,0	2,9	3,4	94,0	93,9	93,2	0,86	1,06110	610	72
400/690V	Q2EP280M4E	Cast Iron	110,0	150,0	1485	200,3	714,0	2,6	7,9	1,0	2,9	3,4	94,5	94,3	93,1	0,84	1,25200	688	73

* IEC 60034-2-1' e göre / According to IEC 60034-2-1
** Ses Basınç Seviyeleri motordan 1m uzaklıktan ölçülmüştür. / The sound pressure measurements are taken 1m away from the motor
*** Tolerans +3 dBA / Tolerance +3 dBA

BOYUTLAR - B3 / DIMENSION - B3

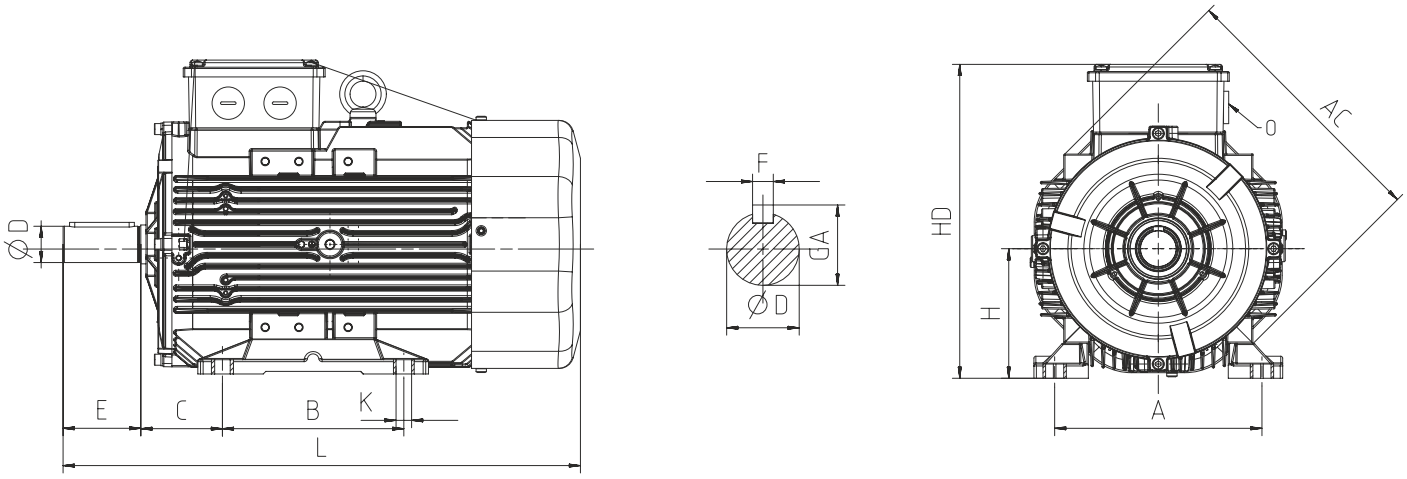

				Ana Boyutlar Main Dimensions			Ayaklı Motorlar Foot Mounted Motors						Mil Shaft				Rulman Bearing		Keçe Seal	
Güç Power (kW)	Kutup sayısı Number of Poles	Motor Tipi Motor Type	Gövde Tipi Housing Type	AC	L	O	B	A	H	HD	K	C	D(1)	E	GA	F(2)	Kasnak Tarafı Drive Side	Kasnak Tarafı Aksi Non drive Side	Kasnak Tarafı Drive Side	Kasnak Tarafı Aksi Non drive Side
1,1	4	Q2H80M4D	Aluminium	158	268	1xM20	100	125	80	216	10	50	19	40	21,5	6	6204-ZZ	6204-ZZ	20*30*7	20*30*7
1,5	2	Q2H80M2D	Aluminium	158	268	1xM20	100	125	80	216	10	50	19	40	21,5	6	6204-ZZ	6204-ZZ	20*30*7	20*30*7
1,5	4	Q2H80M4DE	Aluminium	158	268	1xM20	100	125	80	216	10	50	19	40	21,5	6	6204-ZZ	6204-ZZ	20*30*7	20*30*7
2,2	2	Q2H80M2DE	Aluminium	158	268	1xM20	100	125	80	216	10	50	19	40	21,5	6	6204-ZZ	6204-ZZ	20*30*7	20*30*7
2,2	4	Q2H90L4D	Aluminium	172	344	1xM25	100-125	140	90	223	10	56	24	50	27,0	8	6305-ZZ	6205-ZZ	25*40*7	25*40*7
3,0	2	Q2H90L2D	Aluminium	172	344	1xM25	100-125	140	90	223	10	56	24	50	27,0	8	6305-ZZ	6205-ZZ	25*40*7	25*40*7
3,0	4	Q2H90L4DE	Aluminium	172	379	1xM25	100-125	140	90	223	10	56	24	50	27,0	8	6305-ZZ	6205-ZZ	25*40*7	25*40*7
4,0	2	Q2HS100L2C	Aluminium	172	384	1xM25	140	160	100	233	12	63	28	60	31,0	8	6306-ZZ	6205-ZZ	30*47*7	25*40*7
4,0	4	Q2H100L4D	Aluminium	191	400	1xM25	140	160	100	243	12	63	28	60	31,0	8	6306-ZZ	6205-ZZ	30*47*7	25*40*7
5,5	2	Q2HS112M2C	Aluminium	191	399	1xM25	140	190	112	254	12	70	28	60	31,0	8	6306-ZZ	6205-ZZ	30*47*7	25*40*7
5,5	4	Q2H112M4D	Aluminium	210	421	1xM25	140	190	112	265	12	70	28	60	31,0	8	6306-ZZ	6206-ZZ	30*47*7	30*47*7
7,5	2	Q2HS112M2D	Aluminium	191	421	1xM25	140	190	112	254	12	70	28	60	31,0	8	6306-ZZ	6205-ZZ	30*47*7	25*40*7
11,0	2	Q2H132M2A	Aluminium	260	481	1xM32	140-178	216	132	312	12	89	38	80	41,0	10	6208-ZZ	6208-ZZ	40*62*10	40*62*10
11,0	4	Q2H132M4D	Aluminium	260	481	1xM32	140-178	216	132	312	12	89	38	80	41,0	10	6208-ZZ	6208-ZZ	40*62*10	40*62*10
15,0	2	Q2H132M2B	Aluminium	260	481	1xM32	140-178	216	132	312	12	89	38	80	41,0	10	6208-ZZ	6208-ZZ	40*62*10	40*62*10
15,0	4	Q2H132M4E	Aluminium	260	539	1xM32	140-178	216	132	312	12	89	38	80	41,0	10	6208-ZZ	6208-ZZ	40*62*10	40*62*10
18,5	2	Q2H132M2C	Aluminium	260	539	1xM32	140-178	216	132	312	12	89	38	80	41,0	10	6208-ZZ	6208-ZZ	40*62*10	40*62*10
18,5	4	Q2H160L4B	Aluminium	305	591	1xM32	210-254	254	160	368	14,5	108	42	110	45,0	12	6309-ZZ	6209-ZZ	45*72*10	45*72*10
22,0	2	Q2H160L2C	Aluminium	305	591	1xM32	210-254	254	160	368	14,5	108	42	110	45,0	12	6309-ZZ	6209-ZZ	45*72*10	45*72*10
22,0	4	Q2H160L4C	Aluminium	305	591	1xM32	210-254	254	160	368	14,5	108	42	110	45,0	12	6309-ZZ	6209-ZZ	45*72*10	45*72*10
30,0	2	Q2H180M2B	Aluminium	349	696	1xM40	241-279	279	180	437	14,5	121	48	110	51,5	14	6310-ZZ	6310-ZZ	50*80*10	50*80*10
30,0	4	Q2H180L4C	Aluminium	349	696	1xM40	241-279	279	180	437	14,5	121	48	110	51,5	14	6310-ZZ	6310-ZZ	50*80*10	50*80*10
37,0	2	Q2H180M2C	Aluminium	349	696	1xM40	241-279	279	180	437	14,5	121	48	110	51,5	14	6310-ZZ	6310-ZZ	50*80*10	50*80*10
37,0	4	Q2H200L4D	Aluminium	349	759	1xM50	267-305	318	200	455	18,5	133	55	110	59,0	16	6312-ZZ	6310-ZZ	60*90*10	60*90*10
45,0	2	Q2H200L2D	Aluminium	349	759	1xM50	267-305	318	200	455	18,5	133	55	110	59,0	16	6312-ZZ	6310-ZZ	60*90*10	60*90*10
55,0	2	Q2E225M2C	Aluminium	456	735	1xM50	286-311	356	225	485	18,5	149	55	110	59,0	16	6313-ZZ	6313-ZZ	65*100*13	65*100*13
75,0	2	Q2EP250M2C	Cast Iron	489	893	1xM50	311-349	406	250	616	30	149	60	140	64,0	18	6316-Z	6316-Z	80*100*10	80*100*10
75,0	4	Q2EP250M4E	Cast Iron	489	893	1xM50	311-349	406	250	616	30	149	65	140	69,0	18	6316-Z	6316-Z	80*100*10	80*100*10
110,0	2	Q2EP280M2D	Cast Iron	489	1025	1xM50	368-419	457	280	647	24	190	65	140	69,0	18	6316-Z	6316-Z	80*100*10	80*100*10
110,0	4	Q2EP280M4E	Cast Iron	489	1025	1xM50	368-419	457	280	647	24	130	75	140	79,5	20	6316-Z	6316-Z	80*100*10	80*100*10

(1) Toleranslar 28 mm'ye kadar DIN EN 50347 "j6", 28 mm ve üzeri "k6" / Tolerance DIN EN 50347 "j6" up to 28mm, "k6" above 28mm
(2) DIN 6885'e göre / According to DIN 6885

ÜÇ FAZLI MOTORLAR - KOMPAKT
THREE PHASE MOTORS - COMPACT

BOYUTLAR - B5, B35 / DIMENSION - B5, B35

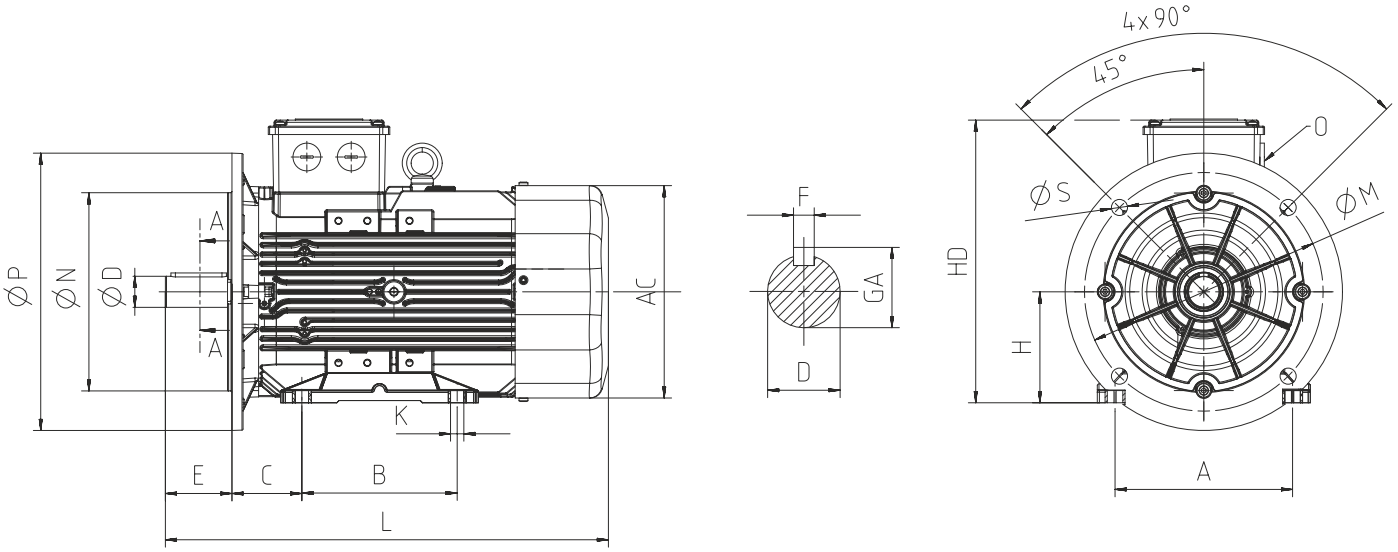

				Ana Boyutlar Main Dimensions			Ayaklı Motorlar Foot Mounted Motors					Mil Shaft				Rulman Bearing		Keçe Seal		Flanş (FA) (B5) Flange (FA) (B5)				
Güç Power (kW)	Kutup sayısı Number of Poles	Motor Tipi Motor Type	Gövde Tipi Housing Type	AC	L	O	B	A	H	HD	K	D(1)	E	GA	F(2)	Kasnak Tarafı Drive Side	Kasnak Tarafı Aksi Non drive Side	Kasnak Tarafı Drive Side	Kasnak Tarafı Aksi Non drive Side	P	N(3)	M	R	S
1,1	4	Q2H80M4D	Aluminium	158	268	1xM20	100	125	80	216	10,0	19	40	21,5	6	6204-ZZ	6204-ZZ	20*30*7	20*30*7	200	130	165	-	12,0
1,5	2	Q2H80M2D	Aluminium	158	268	1xM20	100	125	80	216	10,0	19	40	21,5	6	6204-ZZ	6204-ZZ	20*30*7	20*30*7	200	130	165	-	12,0
1,5	4	Q2H80M4DE	Aluminium	158	268	1xM20	100	125	80	216	10,0	19	40	21,5	6	6204-ZZ	6204-ZZ	20*30*7	20*30*7	200	130	165	-	12,0
2,2	2	Q2H80M2DE	Aluminium	158	268	1xM20	100	125	80	216	10,0	19	40	21,5	6	6204-ZZ	6204-ZZ	20*30*7	20*30*7	200	130	165	-	12,0
2,2	4	Q2H90L4D	Aluminium	172	344	1xM25	100-125	140	90	223	10,0	24	50	27,0	8	6305-ZZ	6205-ZZ	25*40*7	25*40*7	200	130	165	-	12,0
3,0	2	Q2H90L2D	Aluminium	172	344	1xM25	100-125	140	90	223	10,0	24	50	27,0	8	6305-ZZ	6205-ZZ	25*40*7	25*40*7	200	130	165	-	12,0
3,0	4	Q2H90L4DE	Aluminium	172	379	1xM25	100-125	140	90	223	10,0	24	50	27,0	8	6305-ZZ	6205-ZZ	25*40*7	25*40*7	200	130	165	-	12,0
4,0	2	Q2HS100L2C	Aluminium	172	384	1xM25	140	160	100	233	12,0	28	60	31,0	8	6306-ZZ	6205-ZZ	30*47*7	25*40*7	250	180	215	-	14,5
4,0	4	Q2H100L4D	Aluminium	191	400	1xM25	140	160	100	243	12,0	28	60	31,0	8	6306-ZZ	6205-ZZ	30*47*7	30*47*7	250	180	215	-	14,5
5,5	2	Q2HS112M2C	Aluminium	191	399	1xM25	140	190	112	254	12,0	28	60	31,0	8	6306-ZZ	6205-ZZ	30*47*7	25*40*7	250	180	215	-	14,5
5,5	4	Q2H112M4D	Aluminium	210	421	1xM25	140	190	112	265	12,0	28	60	31,0	8	6306-ZZ	6206-ZZ	30*47*7	30*47*7	250	180	215	-	14,5
7,5	2	Q2HS112M2D	Aluminium	191	421	1xM25	140	190	112	254	12,0	28	60	31,0	8	6306-ZZ	6205-ZZ	30*47*7	25*40*7	250	180	215	-	14,5
11,0	2	Q2H132M2A	Aluminium	260	481	1xM32	140-178	216	132	312	12,0	38	80	41,0	10	6208-ZZ	6208-ZZ	40*62*10	40*62*10	300	230	265	-	14,5
11,0	4	Q2H132M4D	Aluminium	260	481	1xM32	140-178	216	132	312	12,0	38	80	41,0	10	6208-ZZ	6208-ZZ	40*62*10	40*62*10	300	230	265	-	14,5
15,0	2	Q2H132M2B	Aluminium	260	481	1xM32	140-178	216	132	312	12,0	38	80	41,0	10	6208-ZZ	6208-ZZ	40*62*10	40*62*10	300	230	265	-	14,5
15,0	4	Q2H132M4E	Aluminium	260	539	1xM32	140-178	216	132	312	12,0	38	80	41,0	10	6208-ZZ	6208-ZZ	40*62*10	40*62*10	300	230	265	-	14,5
18,5	2	Q2H132M2C	Aluminium	260	539	1xM32	140-178	216	132	312	12,0	38	80	41,0	10	6208-ZZ	6208-ZZ	40*62*10	40*62*10	300	230	265	-	14,5
18,5	4	Q2H160L4B	Aluminium	305	591	1xM32	210-254	254	160	368	14,5	42	110	45,0	12	6309-ZZ	6209-ZZ	45*72*10	45*72*10	350	250	300	-	18,5
22,0	2	Q2H160L2C	Aluminium	305	591	1xM32	210-254	254	160	368	14,5	42	110	45,0	12	6309-ZZ	6209-ZZ	45*72*10	45*72*10	350	250	300	-	18,5
22,0	4	Q2H160L4C	Aluminium	305	591	1xM32	210-254	254	160	368	14,5	42	110	45,0	12	6309-ZZ	6209-ZZ	45*72*10	45*72*10	350	250	300	-	18,5
30,0	2	Q2H180M2B	Aluminium	349	696	1xM40	241-279	279	180	437	14,5	48	110	51,5	14	6310-ZZ	6310-ZZ	50*80*10	50*80*10	350	250	300	-	18,5
30,0	4	Q2H180L4C	Aluminium	349	696	1xM40	241-279	279	180	437	14,5	48	110	51,5	14	6310-ZZ	6310-ZZ	50*80*10	50*80*10	350	250	300	-	18,5
37,0	2	Q2H180M2C	Aluminium	349	696	1xM40	241-279	279	180	437	14,5	48	110	51,5	14	6310-ZZ	6310-ZZ	50*80*10	50*80*10	350	250	300	-	18,5
37,0	4	Q2H200L4D	Aluminium	349	759	1xM50	267-305	318	200	455	18,5	55	110	59,0	16	6312-ZZ	6310-ZZ	60*90*10	60*90*10	400	300	350	-	18,5
45,0	2	Q2H200L2D	Aluminium	349	759	1xM50	267-305	318	200	455	18,5	55	110	59,0	16	6312-ZZ	6310-ZZ	60*90*10	60*90*10	400	300	350	-	18,5
55,0	2	Q2E225M2C	Aluminium	456	735	1xM50	286-311	356	225	485	18,5	55	110	59,0	16	6313-ZZ	6313-ZZ	65*100*13	65*100*13	450	350	400	-	18,5
75,0	2	Q2EP250M2C	Cast Iron	489	893	1xM50	349	406	250	616	24,0	60	140	69,0	18	6316-Z	6316-Z	80*100*10	80*100*10	550	450	500	-	18,5
75,0	4	Q2EP250M4E	Cast Iron	489	893	1xM50	349	406	250	616	24,0	65	140	69,0	18	6316-Z	6316-Z	80*100*10	80*100*10	550	450	500	-	18,5
110,0	2	Q2EP280M2D	Cast Iron	489	1025	1xM50	419	457	280	647	24,0	65	140	69,0	18	6316-Z	6316-Z	80*100*10	80*100*10	550	450	500	-	18,5
110,0	4	Q2EP280M4E	Cast Iron	489	1025	1xM50	419	457	280	647	24,0	75	140	79,5	20	6316-Z	6316-Z	80*100*10	80*100*10	550	450	500	-	18,5

(1) Toleranslar 28 mm'ye kadar DIN EN 50347 "j6", 28 mm ve üzeri "k6" / Tolerance DIN EN 50347 "j6" up to 28mm, "k6" above 28mm
(2) DIN 6885'e göre / According to DIN 6885
(3) Tolerans DIN EN 50347 "j6" / Tolerance DIN EN 50347 "j6"

BOYUTLAR - B14a, B34a / DIMENSION - B14a, B34a

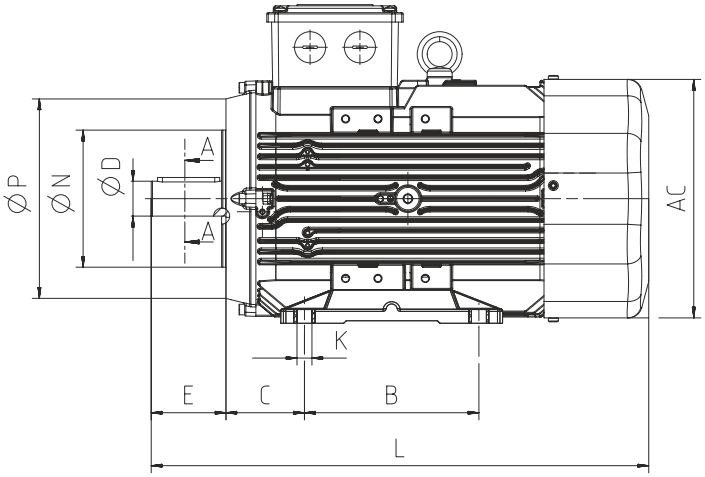

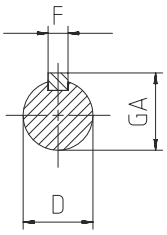

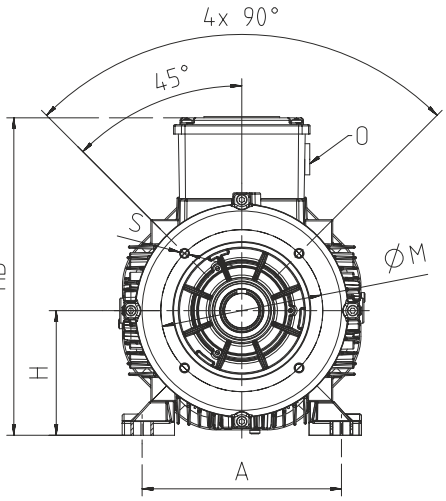

				Ana Boyutlar Main Dimensions			Ayaklı Motorlar Foot Mounted Motors					Mil Shaft				Rulman Bearing		Keçe Seal		Flanş (FC) (B14a) Flange (FC) (B14a)				
Güç Power (kW)	Kutup sayısı Number of Poles	Motor Tipi Motor Type	Gövde Tipi Housing Type	AC	L	O	B	A	H	HD	K	D(1)	E	GA	F(2)	Kasnak Tarafı Drive Side	Kasnak Tarafı Aksi Non drive Side	Kasnak Tarafı Drive Side	Kasnak Tarafı Aksi Non drive Side	P	N(3)	M	R	S
1,1	4	Q2H80M4D	Aluminium	158	268	1xM20	100	125	80	216	10	19	40	21,5	6	6204-ZZ	6204-ZZ	20*30*7	20*30*7	120	80	100	-	M6
1,5	2	Q2H80M2D	Aluminium	158	268	1xM20	100	125	80	216	10	19	40	21,5	6	6204-ZZ	6204-ZZ	20*30*7	20*30*7	120	80	100	-	M6
1,5	4	Q2H80M4DE	Aluminium	158	268	1xM20	100	125	80	216	10	19	40	21,5	6	6204-ZZ	6204-ZZ	20*30*7	20*30*7	120	80	100	-	M6
2,2	2	Q2H80M2DE	Aluminium	158	268	1xM20	100	125	80	216	10	19	40	21,5	6	6204-ZZ	6204-ZZ	20*30*7	20*30*7	120	80	100	-	M6
2,2	4	Q2H90L4D	Aluminium	172	344	1xM25	100-125	140	90	223	10	24	50	27,0	8	6305-ZZ	6205-ZZ	25*40*7	25*40*7	140	95	115	-	M8
3,0	2	Q2H90L2D	Aluminium	172	344	1xM25	100-125	140	90	223	10	24	50	27,0	8	6305-ZZ	6205-ZZ	25*40*7	25*40*7	140	95	115	-	M8
3,0	4	Q2H90L4DE	Aluminium	172	379	1xM25	100-125	140	90	223	10	24	50	27,0	8	6305-ZZ	6205-ZZ	25*40*7	25*40*7	140	95	115	-	M8
4,0	2	Q2HS100L2C	Aluminium	172	384	1xM25	140	160	100	233	12	28	60	31,0	8	6306-ZZ	6205-ZZ	30*47*7	25*40*7	160	110	130	-	M8
4,0	4	Q2H100L4D	Aluminium	191	400	1xM25	140	160	100	243	12	28	60	31,0	8	6306-ZZ	6205-ZZ	30*47*7	30*47*7	160	110	130	-	M8
5,5	2	Q2HS112M2C	Aluminium	191	399	1xM25	140	190	112	254	12	28	60	31,0	8	6306-ZZ	6205-ZZ	30*47*7	25*40*7	160	110	130	-	M8
5,5	4	Q2H112M4D	Aluminium	210	421	1xM25	140	190	112	265	12	28	60	31,0	8	6306-ZZ	6206-ZZ	30*47*7	30*47*7	160	110	130	-	M8
7,5	2	Q2HS112M2D	Aluminium	191	421	1xM25	140	190	112	254	12	28	60	31,0	8	6306-ZZ	6205-ZZ	30*47*7	25*40*7	160	110	130	-	M8
11,0	2	Q2H132M2A	Aluminium	260	481	1xM32	140-178	216	132	312	12	38	80	41,0	10	6208-ZZ	6208-ZZ	40*62*10	40*62*10	200	130	165	-	M10
11,0	4	Q2H132M4D	Aluminium	260	539	1xM32	140-178	216	132	312	12	38	80	41,0	10	6208-ZZ	6208-ZZ	40*62*10	40*62*10	200	130	165	-	M10
15,0	2	Q2H132M2B	Aluminium	260	539	1xM32	140-178	216	132	312	12	38	80	41,0	10	6208-ZZ	6208-ZZ	40*62*10	40*62*10	200	130	165	-	M10
15,0	4	Q2H132M4E	Aluminium	260	539	1xM32	140-178	216	132	312	12	38	80	41,0	10	6208-ZZ	6208-ZZ	40*62*10	40*62*10	200	130	165	-	M10
18,5	2	Q2H132M2C	Aluminium	260	539	1xM32	140-178	216	132	312	12	38	80	41,0	10	6208-ZZ	6208-ZZ	40*62*10	40*62*10	200	130	165	-	M10

(1) Toleranslar 28 mm'ye kadar DIN EN 50347 "j6", 28 mm ve üzeri "k6" / Tolerance DIN EN 50347 "j6" up to 28mm, "k6" above 28mm
(2) DIN 6885'e göre / According to DIN 6885
(3) Tolerans DIN EN 50347 "j6" / Tolerance DIN EN 50347 "j6"

ÜÇ FAZLI MOTORLAR - KOMPAKT
THREE PHASE MOTORS - COMPACT

BOYUTLAR - B14b, B34b / DIMENSION - B14b, B34b

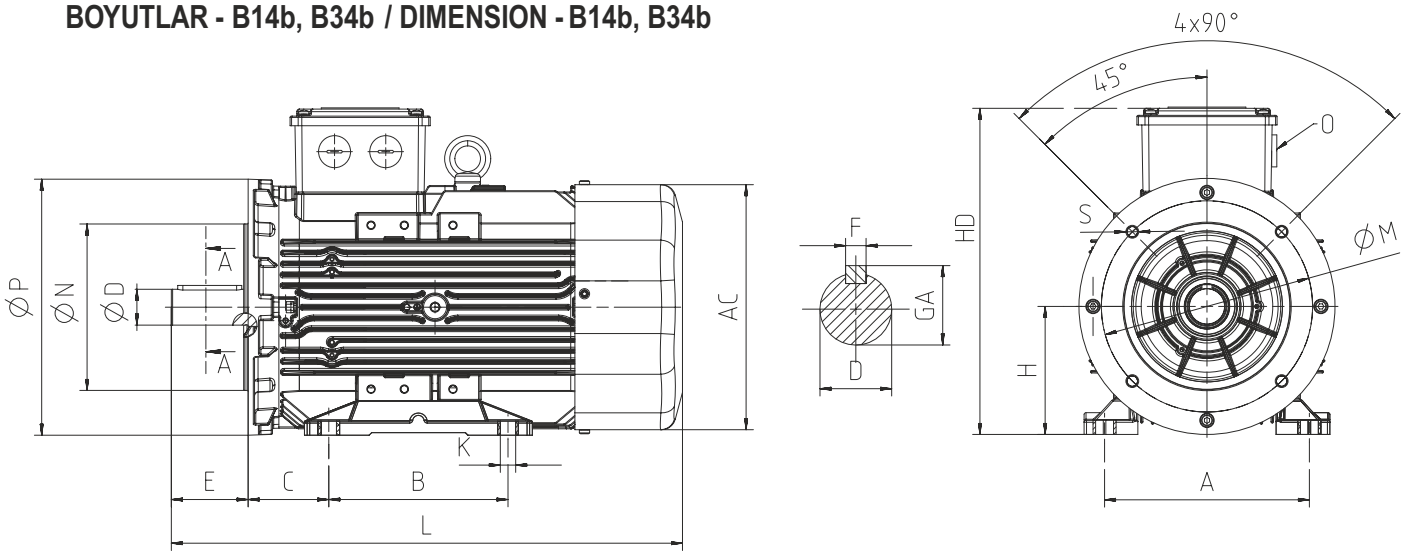

				Ana Boyutlar Main Dimensions			Ayaklı Motorlar Foot Mounted Motors					Mil Shaft				Rulman Bearing		Keçe Seal		Flanş (FB) (B14b) Flange (FB) (B14b)				
Güç Power (kW)	Kutup sayısı Number of Poles	Motor Tipi Motor Type	Gövde Tipi Housing Type	AC	L	O	B	A	H	HD	K	D(1)	E	GA	F(2)	Kasnak Tarafı Drive Side	Kasnak Tarafı Aksi Non drive Side	Kasnak Tarafı Drive Side	Kasnak Tarafı Aksi Non drive Side	P	N(3)	M	R	S
1,1	4	Q2H80M4D	Aluminium	158	268	1xM20	100	125	80	216	10	19	40	21,5	6	6204-ZZ	6204-ZZ	20*30*7	20*30*7	160	110	130	-	M8
1,5	2	Q2H80M2D	Aluminium	158	268	1xM20	100	125	80	216	10	19	40	21,5	6	6204-ZZ	6204-ZZ	20*30*7	20*30*7	160	110	130	-	M8
1,5	4	Q2H80M4DE	Aluminium	158	268	1xM20	100	125	80	216	10	19	40	21,5	6	6204-ZZ	6204-ZZ	20*30*7	20*30*7	160	110	130	-	M8
2,2	2	Q2H80M2DE	Aluminium	158	268	1xM20	100	125	80	216	10	19	40	21,5	6	6204-ZZ	6204-ZZ	20*30*7	20*30*7	160	110	130	-	M8
2,2	4	Q2H90L4D	Aluminium	172	344	1xM25	100-125	140	90	223	10	24	50	27,0	8	6305-ZZ	6205-ZZ	25*40*7	25*40*7	160	110	130	-	M8
3,0	2	Q2H90L2D	Aluminium	172	344	1xM25	100-125	140	90	223	10	24	50	27,0	8	6305-ZZ	6205-ZZ	25*40*7	25*40*7	160	110	130	-	M8
3,0	4	Q2H90L4DE	Aluminium	172	379	1xM25	100-125	140	90	223	10	24	50	27,0	8	6305-ZZ	6205-ZZ	25*40*7	25*40*7	160	110	130	-	M8
4,0	2	Q2HS100L2C	Aluminium	172	384	1xM25	140	160	100	233	12	28	60	31,0	8	6306-ZZ	6205-ZZ	30*47*7	25*40*7	200	130	165	-	M10
4,0	4	Q2H100L4D	Aluminium	191	400	1xM25	140	160	100	243	12	28	60	31,0	8	6306-ZZ	6205-ZZ	30*47*7	30*47*7	200	130	165	-	M10
5,5	2	Q2HS112M2C	Aluminium	191	399	1xM25	140	190	112	254	12	28	60	31,0	8	6306-ZZ	6205-ZZ	30*47*7	25*40*7	200	130	165	-	M10
5,5	4	Q2H112M4D	Aluminium	210	421	1xM25	140	190	112	265	12	28	60	31,0	8	6306-ZZ	6206-ZZ	30*47*7	30*47*7	200	130	165	-	M10
7,5	2	Q2HS112M2D	Aluminium	191	421	1xM25	140	190	112	254	12	28	60	31,0	8	6306-ZZ	6205-ZZ	30*47*7	25*40*7	200	130	165	-	M10
11,0	2	Q2H132M2A	Aluminium	260	481	1xM32	140-178	216	132	312	12	38	80	41,0	10	6208-ZZ	6208-ZZ	40*62*10	40*62*10	250	180	215	-	M12
11,0	4	Q2H132M4D	Aluminium	260	539	1xM32	140-178	216	132	312	12	38	80	41,0	10	6208-ZZ	6208-ZZ	40*62*10	40*62*10	250	180	215	-	M12
15,0	2	Q2H132M2B	Aluminium	260	539	1xM32	140-178	216	132	312	12	38	80	41,0	10	6208-ZZ	6208-ZZ	40*62*10	40*62*10	250	180	215	-	M12
15,0	4	Q2H132M4E	Aluminium	260	539	1xM32	140-178	216	132	312	12	38	80	41,0	10	6208-ZZ	6208-ZZ	40*62*10	40*62*10	250	180	215	-	M12
18,5	2	Q2H132M2C	Aluminium	260	539	1xM32	140-178	216	132	312	12	38	80	41,0	10	6208-ZZ	6208-ZZ	40*62*10	40*62*10	250	180	215	-	M12

(1) Toleranslar 28 mm'ye kadar DIN EN 50347 "j6", 28 mm ve üzeri "k6" / Tolerance DIN EN 50347 "j6" up to 28mm, "k6" above 28mm
(2) DIN 6885'e göre / According to DIN 6885
(3) Tolerans DIN EN 50347 "j6" / Tolerance DIN EN 50347 "j6"

TR MOTOR PARÇA LİSTESİ

EN MOTOR PART LIST

DE ERSATZTEILLISTE FÜR MOTOR

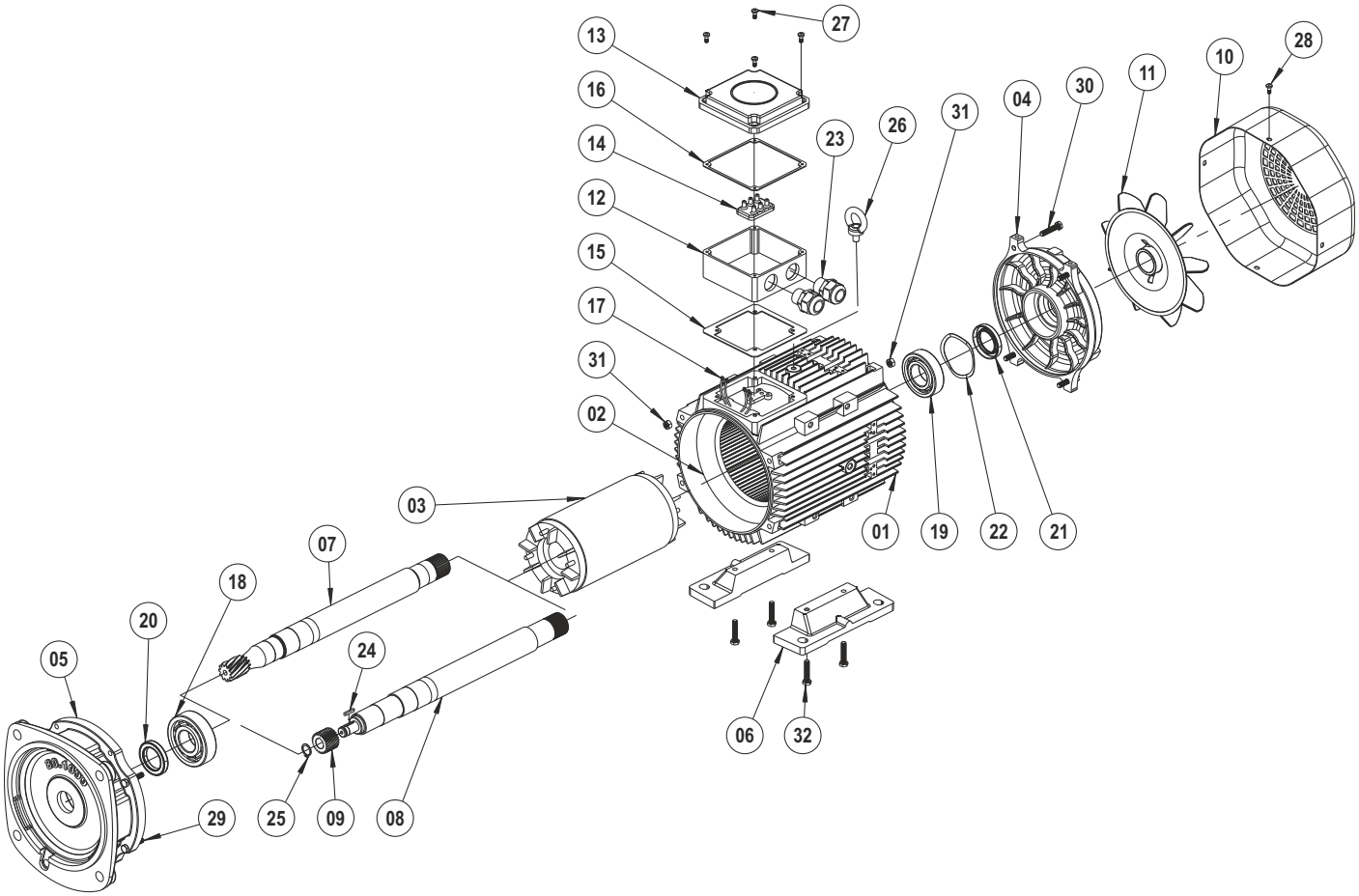

01	Gövde	**01**	Housing	**01**	Gehäuse
02	Sargılı Stator	**02**	Wound Stator	**02**	gewickelter Stator
03	Rotor	**03**	Rotor	**03**	Rotor
04	Motor Arka Kapağı	**04**	Nondrive - Endshield	**04**	B-Lagerschild
05	PGR Motor Bağlantı Flanşı	**05**	Moter Connection Flange	**05**	Moter-Anschlussflansch
06	Ayak	**06**	Foot	**06**	Fuβ
07	Motor Mili (Yekpare)	**07**	Drive Shaft (Gearcut)	**07**	Antriebswelle (verzahnt)
08	Motor Mili (Çakma)	**08**	Drive Shaft (Plain)	**08**	Antriebswelle (glatt)
09	Z1 Dişlisi	**09**	Z1 Gear	**09**	Antriebsritzel
10	Fan Kapağı	**10**	Fan Cover	**10**	Lüfterhaube
11	Fan	**11**	Fan	**11**	Lüfter
12	Terminal Kutusu	**12**	Terminal Box	**12**	Klemmkasten
13	Terminal Kutu Kapağı	**13**	Terminal Box Cover	**13**	Klemmkastendeckel
14	Klemens Plakası	**14**	Terminal Plate	**14**	Anschlussplatte
15	Terminal Contası Alt	**15**	Terminal Gasket Down	**15**	Klemmkastendichtung unten
16	Terminal Contası Üst	**16**	Terminal Gasket Up	**16**	Klemmkastendichtung oben
17	Kablo Grubu	**17**	Lead Cables	**17**	Kabelbaum
18	Ön Rulman	**18**	Bal Bearing (Drive-Side)	**18**	Kugellager (Antriebsseite)
19	Arka Rulman	**19**	Bal Bearing (Non-Drive-Side)	**19**	Kugellager (Nicht-Antriebsseite)
20	Keçe (Ön)	**20**	Seal Ring (Front)	**20**	Dichtungsring (Vorne)
21	Keçe (Arka)	**21**	Seal Ring (Back)	**21**	Dichtungsring (Hinten)
22	Rulman Gergi Yayı	**22**	Bearing Shim	**22**	Stützscheibe
23	Rakor	**23**	Conduit	**23**	Gewindemuffe
24	Kama	**24**	Key	**24**	Passfeder
25	Segman	**25**	Circilip DIN 471	**25**	Sicherungsring DIN 471
26	Mapa	**26**	Eye Bolt	**26**	Augenschraube
27	Yıldız Başlı Civata	**27**	Pan Head Secrews	**27**	Kreuzschlitzschraube
28	Yıldız Başlı Civata	**28**	Pan Head Secrews	**28**	Kreuzschlitzschraube
29	Civata DIN 933	**29**	Bolt	**29**	Schraube DIN 933
30	Civata DIN 933	**30**	Bolt	**30**	Schraube DIN 933
31	Somun	**31**	Nut	**31**	Schraubenmutter
32	Civata DIN 933	**32**	Bolt	**32**	Schraube DIN 933

TR FRENLİ MOTOR PARÇA LİSTESİ

EN BRAKE MOTOR PART LIST

DE ERSATZTEILLISTE FÜR MOTOR MIT BREMSE

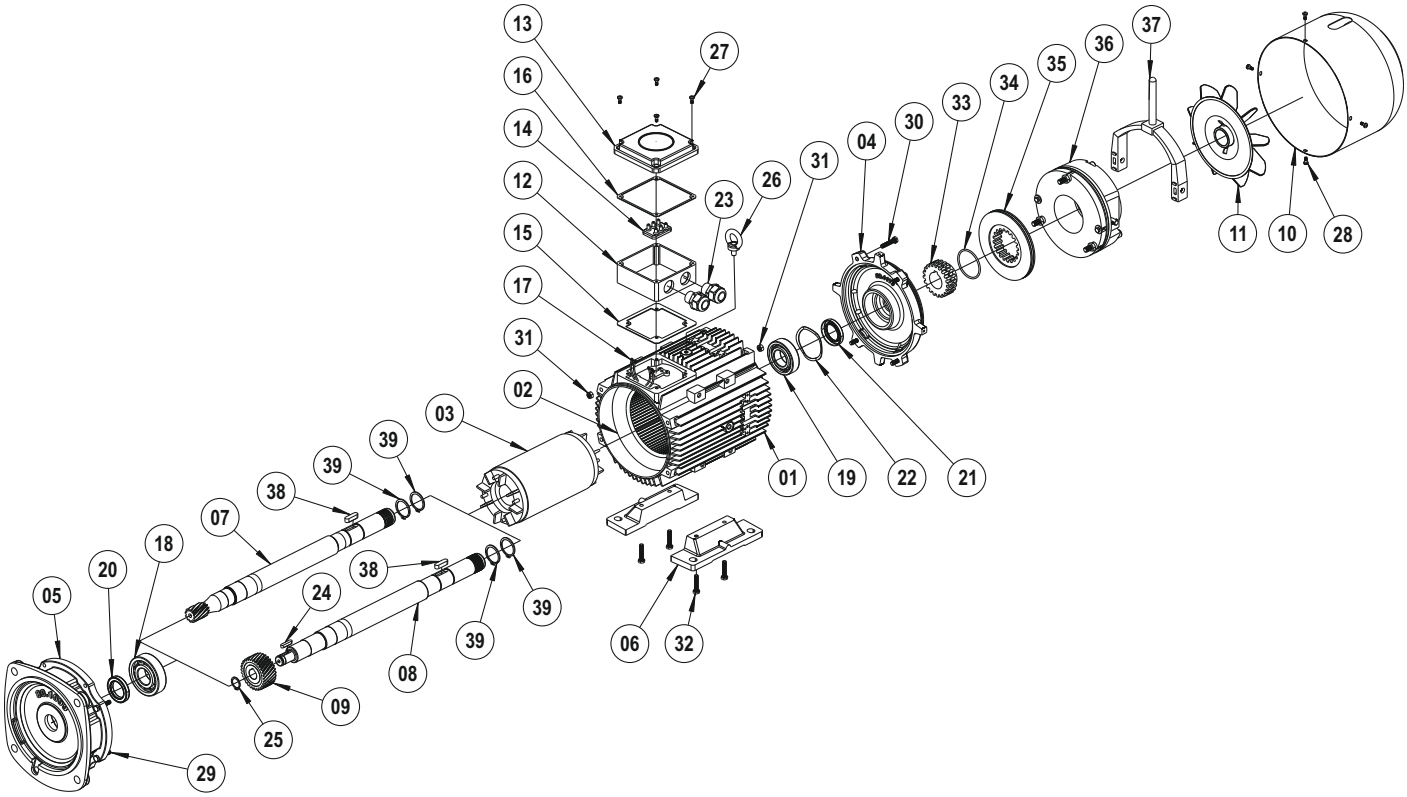

	TR	EN	DE
01	Gövde	Housing	Gehäuse
02	Sargılı Stator	Wound Stator	gewickelter Stator
03	Rotor	Rotor	Rotor
04	Fren Flanşı	Brake Connection Flange	Bremsflansch
05	PGR Motor Bağlantı Flanşı	Motor Connection Flange	Moter-Anschlussflansch
06	Ayak	Foot	Fuß
07	Motor Mili (Yekpare)	Drive Shaft (Gearcut)	Antriebswelle (verzahnt)
08	Motor Mili (Çakma)	Drive Shaft (Plain)	Antriebswelle (glatt)
09	Z1 Dişlisi	Z1 Gear	Antriebsritzel
10	Fan Kapağı	Fan Cover	Lüfterhaube
11	Fan	Fan	Lüfter
12	Terminal Kutusu	Terminal Box	Klemmkasten
13	Terminal Kutu Kapağı	Terminal Box Cover	Klemmkastendeckel
14	Klemens Plakası	Terminal Plate	Anschlussplatte
15	Terminal Contası Alt	Terminal Gasket Down	Klemmkastendichtung unten
16	Terminal Contası Üst	Terminal Gasket Up	Klemmkastendichtung oben
17	Kablo Grubu	Lead Cables	Kabelbaum
18	Ön Rulman	Bal Bearing (Drive-Side)	Kugellager (Antriebsseite)
19	Arka Rulman	Bal Bearing (Non-Drive-Side)	Kugellager (Nicht-Antriebsseite)
20	Keçe (Ön)	Seal Ring (Front)	Dichtungsring (Vorne)
21	Keçe (Arka)	Seal Ring (Back)	Dichtungsring (Hinten)
22	Rulman Gergi Yayı	Bearing Shim	Stützscheibe
23	Rakor	Conduit	Gewindemuffe
24	Kama	Key	Passfeder
25	Segman	Circilip DIN 471	Sicherungsring DIN 471
26	Mapa	Eye Bolt	Augenschraube
27	Yıldız Başlı Civata	Pan Head Screws	Kreuzschlitzschraube
28	Yıldız Başlı Civata	Pan Head Screws	Kreuzschlitzschraube
29	Civata DIN 933	Bolt	Schraube DIN 933
30	Civata DIN 933	Bolt	Schraube DIN 933
31	Somun	Nut	Schraubenmutter
32	Civata DIN 933	Bolt	Schraube DIN 933
33	Fren Kaplini	Coupling	Kupplung
34	O-Ring	O-Ring	O-Ring
35	Fren Balatası	Brake Lining	Bremsbelag
36	Fren	Brake	Bremse
37	Manuel Kolu	Hand Release	Handauslöser
38	Kama	Key	Passfeder
39	Segman DIN 471	Circilip DIN 471	Sicherungsring DIN 471

PGR DRIVE TECHNOLOGIES

TR B3-B5-B14 FLANŞLI MOTOR PARÇA LİSTESİ

EN B3-B5-B14 FLANGE MOTOR PART LIST

DE ERSATZTEILLISTE FÜR MOTOR MIT B3-B5-B14-FLANSCH

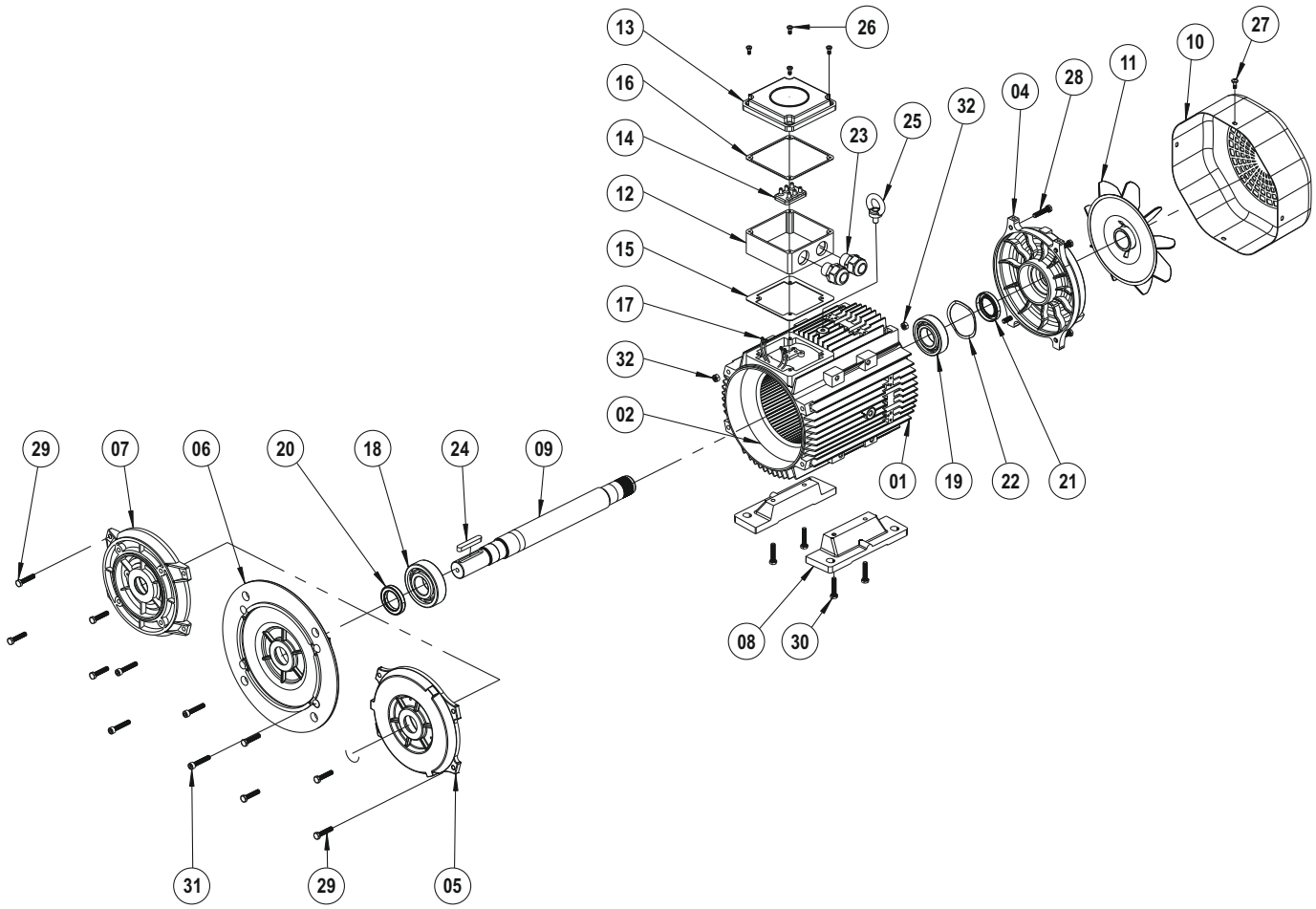

	TR	EN	DE
01	Gövde	Housing	Gehäuse
02	Sargılı Stator	Wound Stator	gewickelter Stator
03	Rotor	Rotor	Rotor
04	Motor Arka Kapağı	Nondrive - Endshield	B-Lagerschild
05	B3 Motor Bağlantı Flanşı	Flange	B3 Flansch
06	B5 Motor Bağlantı Flanşı	Flange	B5 Flansch
07	B14 Motor Bağlantı Flanşı	Flange	B14 Flansch
08	Ayak	Foot	Fuß
09	Motor Mili (Standart)	Drive Shaft (standard)	Antriebswelle (standart)
10	Fan Kapağı	Fan Cover	Lüfterhaube
11	Fan	Fan	Lüfter
12	Terminal Kutusu	Terminal Box	Klemmkasten
13	Terminal Kutu Kapağı	Terminal Box Cover	Klemmkastendeckel
14	Klemens Plakası	Terminal Plate	Anschlussplatte
15	Terminal Contası Alt	Terminal Gasket Down	Klemmkastendichtung unten
16	Terminal Contası Üst	Terminal Gasket Up	Klemmkastendichtung oben
17	Kablo Grubu	Lead Cables	Kabelbaum
18	Ön Rulman	Bal Bearing (Drive-Side)	Kugellager (Antriebsseite)
19	Arka Rulman	Bal Bearing (Non-Drive-Side)	Kugellager (Nicht-Antriebsseite)
20	Keçe (Ön)	Seal Ring (Front)	Dichtungsring (Vorne)
21	Keçe (Arka)	Seal Ring (Back)	Dichtungsring (Hinten)
22	Rulman Gergi Yayı	Bearing Shim	Stützscheibe
23	Rakor	Conduit	Gewindemuffe
24	Kama	Key	Passfeder
25	Mapa	Eye Bolt	Augenschraube
26	Yıldız Başlı Civata	Pan Head Screws	Kreuzschlitzschraube
27	Yıldız Başlı Civata	Pan Head Screws	Kreuzschlitzschraube
28	Civata DIN 933	Bolt	Schraube DIN 933
29	Civata DIN 933	Bolt	Schraube DIN 933
30	Civata DIN 933	Bolt	Schraube DIN 933
31	Civata DIN 912	Bolt	Schraube DIN 912
32	Somun	Nut	Schraubenmutter

TR FRENLİ B3-B5-B14 FLANŞLI MOTOR PARÇA LİSTESİ

EN BRAKE B3-B5-B14 FLANGE MOTOR PART LIST

DE ERSATZTEILLISTE FÜR MOTOR MIT BREMSE UND B3-B5-B14-FLANSCH

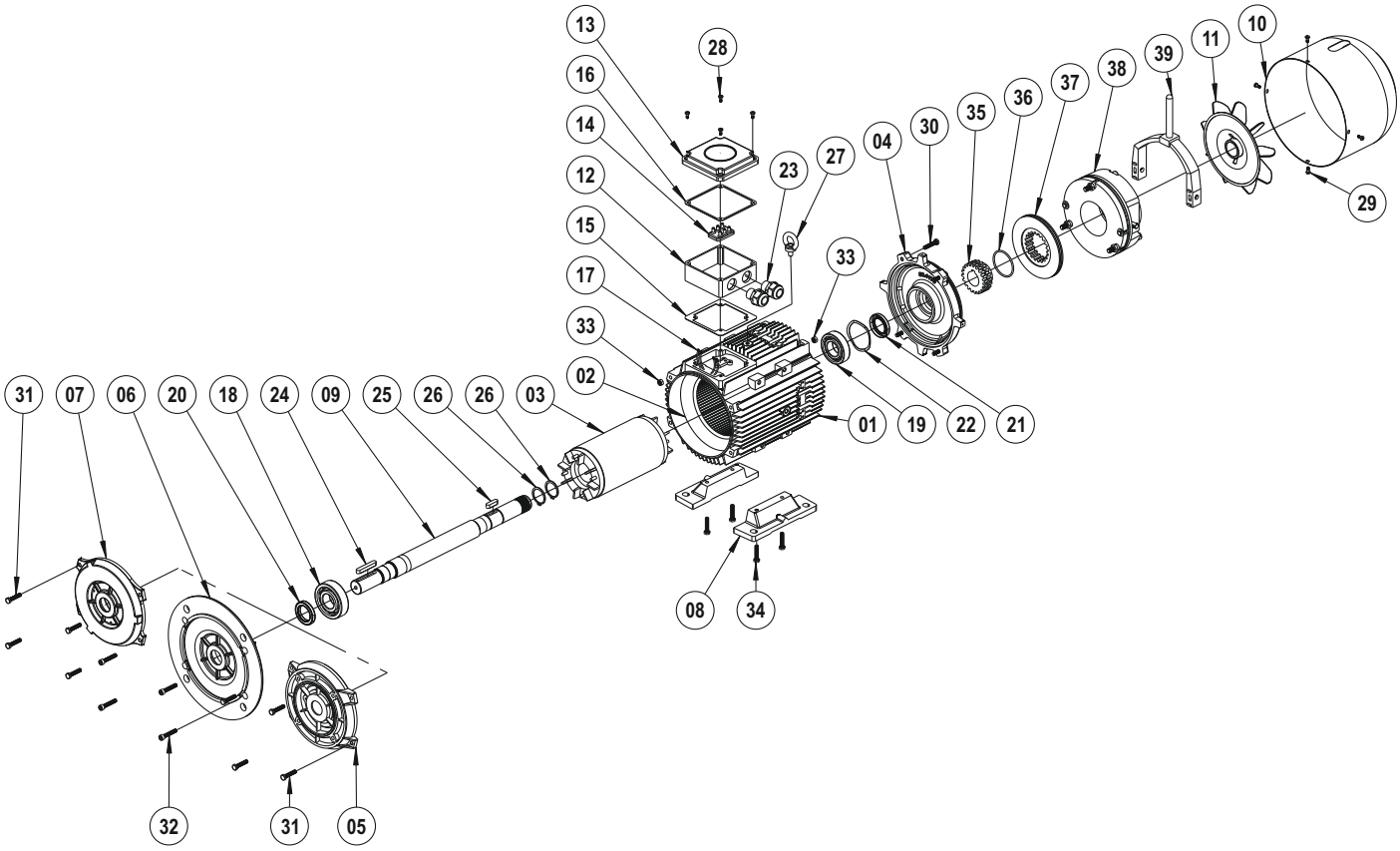

	TR	EN	DE
01	Gövde	Housing	Gehäuse
02	Sargılı Stator	Wound Stator	gewickelter Stator
03	Rotor	Rotor	Rotor
04	Fren Flanşı	Brake Connection Flange	Bremsflansch
05	B3 Motor Bağlantı Flanşı	Flange	B3 Flansch
06	B5 Motor Bağlantı Flanşı	Flange	B5 Flansch
07	B14 Motor Bağlantı Flanşı	Flange	B14 Flansch
08	Ayak	Foot	Fuß
09	Motor Mili (Standart)	Drive Shaft (standard)	Antriebswelle (standart)
10	Fan Kapağı	Fan Cover	Lüfterhaube
11	Fan	Fan	Lüfter
12	Terminal Kutusu	Terminal Box	Klemmkasten
13	Terminal Kutu Kapağı	Terminal Box Cover	Klemmkastendeckel
14	Klemens Plakası	Terminal Plate	Anschlussplatte
15	Terminal Contası Alt	Terminal Gasket Down	Klemmkastendichtung unten
16	Terminal Contası Üst	Terminal Gasket Up	Klemmkastendichtung oben
17	Kablo Grubu	Lead Cables	Kabelbaum
18	Ön Rulman	Bal Bearing (Drive-Side)	Kugellager (Antriebsseite)
19	Arka Rulman	Bal Bearing (Non-Drive-Side)	Kugellager (Nicht-Antriebsseite)
20	Keçe (Ön)	Seal Ring (Front)	Dichtungsring (Vorne)
21	Keçe (Arka)	Seal Ring (Back)	Dichtungsring (Hinten)
22	Rulman Gergi Yayı	Bearing Shim	Stützscheibe
23	Rakor	Conduit	Gewindemuffe
24	Kama	Key	Passfeder
25	Kama	Key	Passfeder
26	Segman	Circilip DIN 471	Sicherungsring DIN 471
27	Mapa	Eye Bolt	Augenschraube
28	Yıldız Başlı Civata	Pan Head Screws	Kreuzschlitzschraube
29	Yıldız Başlı Civata	Pan Head Screws	Kreuzschlitzschraube
30	Civata DIN 933	Bolt	Schraube DIN 933
31	Civata DIN 933	Bolt	Schraube DIN 933
32	Civata DIN 912	Bolt	Schraube DIN 912
33	Somun	Nut	Schraubenmutter
34	Civata DIN 933	Bolt	Schraube DIN 933
35	Fren Kaplini	Brake Coupling	Kupplung
36	O-Ring	O-Ring	O-Ring
37	Fren Balatası	Brake Lining	Bremsbelag
38	Fren	Brake	Bremse
39	Manuel Kolu	Hand Release	Handauslöser

TR MOTOR PARÇA LİSTESİ

EN THE MOTOR PART LIST

DE ERSATZTEILLISTE FÜR MOTOR

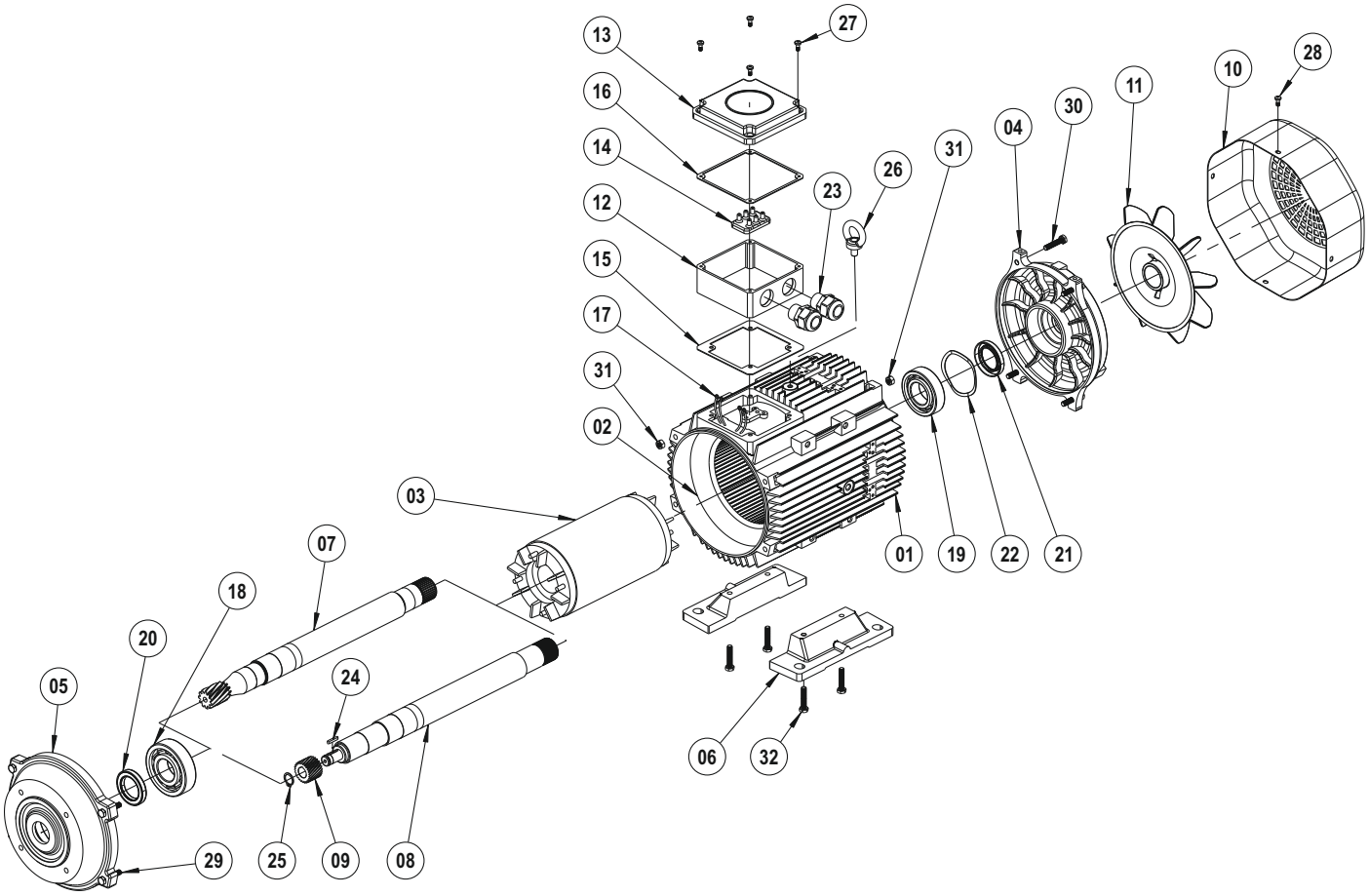

01	Gövde	01	Housing	01	Gehäuse
02	Sargılı Stator	02	Wound Stator	02	gewickelter Stator
03	Rotor	03	Rotor	03	Rotor
04	Motor Arka Kapağı	04	Nondrive - Endshield	04	B-Lagerschild
05	PGR Motor Bağlantı Flanşı	05	Moter Connection Flange	05	Moter-Anschlussflansch
06	Ayak	06	Foot	06	Fuß
07	Motor Mili (Yekpare)	07	Drive Shaft (Gearcut)	07	Antriebswelle (verzahnt)
08	Motor Mili (Çakma)	08	Drive Shaft (Plain)	08	Antriebswelle (glatt)
09	Z1 Dişlisi	09	Z1 Gear	09	Antriebsritzel
10	Fan Kapağı	10	Fan Cover	10	Lüfterhaube
11	Fan	11	Fan	11	Lüfter
12	Terminal Kutusu	12	Terminal Box	12	Klemmkasten
13	Terminal Kutu Kapağı	13	Terminal Box Cover	13	Klemmkastendeckel
14	Klemens Plakası	14	Terminal Plate	14	Anschlussplatte
15	Terminal Contası Alt	15	Terminal Gasket Down	15	Klemmkastendichtung unten
16	Terminal Contası Üst	16	Terminal Gasket Up	16	Klemmkastendichtung oben
17	Kablo Grubu	17	Lead Cables	17	Kabelbaum
18	Ön Rulman	18	Bal Bearing (Drive-Side)	18	Kugellager (Antriebsseite)
19	Arka Rulman	19	Bal Bearing (Non-Drive-Side)	19	Kugellager (Nicht-Antriebsseite)
20	Keçe (Ön)	20	Seal Ring (Front)	20	Dichtungsring (Vorne)
21	Keçe (Arka)	21	Seal Ring (Back)	21	Dichtungsring (Hinten)
22	Rulman Gergi Yayı	22	Bearing Shim	22	Stützscheibe
23	Rakor	23	Conduit	23	Gewindemuffe
24	Kama	24	Key	24	Passfeder
25	Segman	25	Circilip DIN 471	25	Sicherungsring DIN 471
26	Mapa	26	Eye Bolt	26	Augenschraube
27	Yıldız Başlı Civata	27	Pan Head Screws	27	Kreuzschlitzschraube
28	Yıldız Başlı Civata	28	Pan Head Screws	28	Kreuzschlitzschraube
29	Civata DIN 933	29	Bolt	29	Schraube DIN 933
30	Civata DIN 933	30	Bolt	30	Schraube DIN 933
31	Somun	31	Nut	31	Schraubenmutter
32	Civata DIN 933	32	Bolt	32	Schraube DIN 933

TR FRENLİ MOTOR PARÇA LİSTESİ

EN THE MOTOR PART LIST WITH BRAKE

DE ERSATZTEILLISTE FÜR MOTOR MIT BREMSE

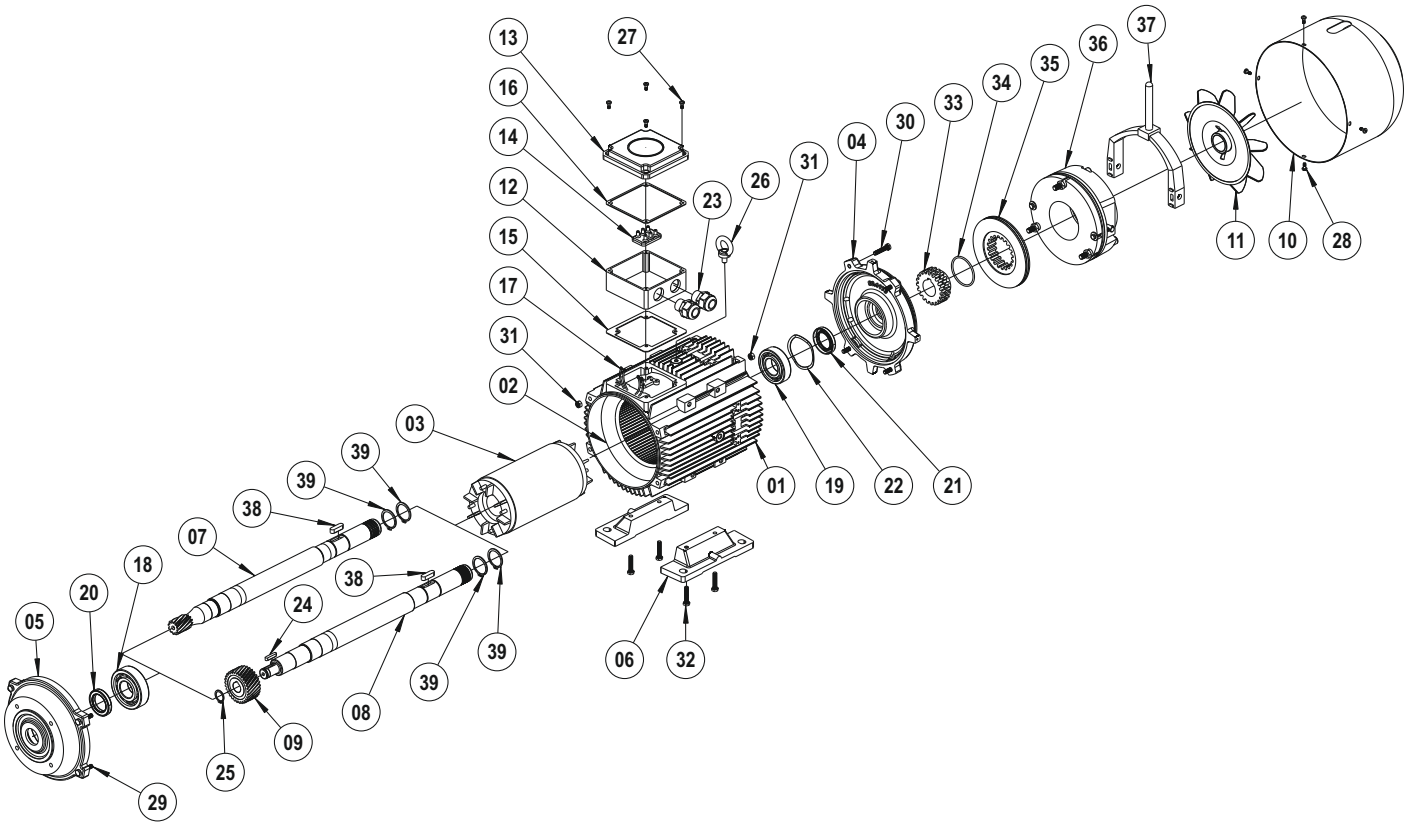

01	Gövde	01	Housing	01	Gehäuse
02	Sargılı Stator	02	Wound Stator	02	gewickelter Stator
03	Rotor	03	Rotor	03	Rotor
04	Fren Flanşı	04	Brake Connection Flange	04	Bremsflansch
05	PGR Motor Bağlantı Flanşı	05	Flange	05	Moter-Anschlussflansch
06	Ayak	06	Foot	06	Fuß
07	Motor Mili (Yekpare)	07	Drive Shaft (Gearcut)	07	Antriebswelle (verzahnt)
08	Motor Mili (Çakma)	08	Drive Shaft (Plain)	08	Antriebswelle (glatt)
09	Z1 Dişlisi	09	Z1 Gear	09	Antriebsritzel
10	Fan Kapağı	10	Fan Cover	10	Lüfterhaube
11	Fan	11	Fan	11	Lüfter
12	Terminal Kutusu	12	Terminal Box	12	Klemmkasten
13	Terminal Kutu Kapağı	13	Terminal Box Cover	13	Klemmkastendeckel
14	Klemens Plakası	14	Terminal Plate	14	Anschlussplatte
15	Terminal Contası Alt	15	Terminal Gasket Down	15	Klemmkastendichtung unten
16	Terminal Contası Üst	16	Terminal Gasket Up	16	Klemmkastendichtung oben
17	Kablo Grubu	17	Lead Cables	17	Kabelbaum
18	Ön Rulman	18	Bal Bearing (Drive-Side)	18	Kugellager (Antriebsseite)
19	Arka Rulman	19	Bal Bearing (Non-Drive-Side)	19	Kugellager (Nicht-Antriebsseite)
20	Keçe (Ön)	20	Seal Ring (Front)	20	Dichtungsring (Vorne)
21	Keçe (Arka)	21	Seal Ring (Back)	21	Dichtungsring (Hinten)
22	Rulman Gergi Yayı	22	Bearing Shim	22	Stützscheibe
23	Rakor	23	Conduit	23	Gewindemuffe
24	Kama	24	Key	24	Passfeder
25	Segman	25	Circilip DIN 471	25	Sicherungsring DIN 471
26	Mapa	26	Eye Bolt	26	Augenschraube
27	Yıldız Başlı Civata	27	Pan Head Screws	27	Kreuzschlitzschraube
28	Yıldız Başlı Civata	28	Pan Head Screws	28	Kreuzschlitzschraube
29	Civata DIN 933	29	Bolt	29	Schraube DIN 933
30	Civata DIN 933	30	Bolt	30	Schraube DIN 933
31	Somun	31	Nut	31	Schraubenmutter
32	Civata DIN 933	32	Bolt	32	Schraube DIN 933
33	Fren Kaplini	33	Coupling	33	Kupplung
34	O-Ring	34	O-Ring	34	O-Ring
35	Fren Balatası	35	Brake Lining	35	Bremsbelag
36	Fren	36	Brake	36	Bremse
37	Manuel Kolu	37	Hand Release	37	Handauslöser
38	Kama	38	Key	38	Passfeder
39	Segman	39	Circilip DIN 471	39	Sicherungsring DIN 471

TR FREN PARÇA LİSTESİ | EN BRAKE PART LIST | DE BREMSE-TEILELISTE

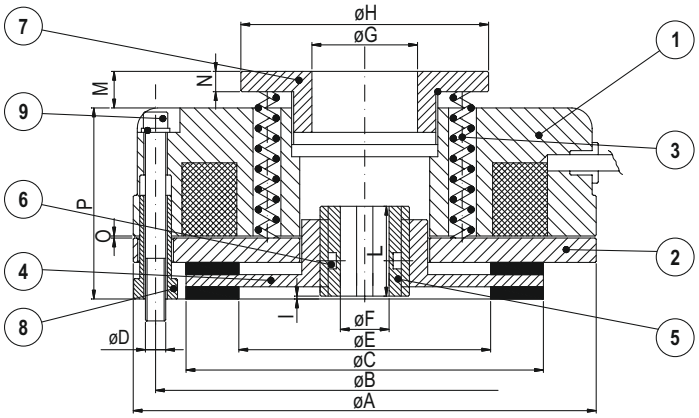

1 Elektro mıknatıs
2 Endüvi plakası
3 Tork yayı
4 Disk
5 Kamalı burç
6 O-ring
7 Ayar halkası
8 Ayar somunu
9 Bağlantı civataları

1 Electromagnet
2 Armature plate
3 Torque springs
4 Disc
5 Splined hub
6 O-ring
7 Adjuster rings
8 Adjuster nuts
9 Fixing screws

1 Elektromagnet
2 Ankerplatte
3 Bremsfeder
4 Scheibe
5 Nabe
6 O-Ring
7 Einstellring
8 Einstellschraube
9 Feststellschraube

Tip / Type / Typ Fren Modeli / Brake Model / Bremsmodell	K1	K2	K3	K4	K5	K6	K7	K7/D	K8	K8/D	K9	K9/D	K9/T
Statik Fren Momenti / Static Braking Torque / Statisches Bremsmoment (Nm)	5	12	16	20	40	60	90	180	200	400	300	600	900
Motorun Max. Hızı / Max Speed of the motor / Höchstgeschwindigkeit des Motors (rpm)	3000	3000	3000	3000	3000	3000	3000	3000	1500	1500	1500	1500	1500
Giriş Gücü / Input Power / Eingangsleistung (W)	15	20	25	30	45	50	55	55	60	60	65	65	65
Max. Ses / Max noisiness / Maximale lautheit (≤dB-A)	68	69	68	69	70	70	70	70	70	69	69	69	70
Ağırlık / Weight / Gewicht (Kg.)	1,1	1,85	2,55	2,84	4,8	7	12	15	14,3	18	23	28	34
A	84	104	114	124	148	159	189	189	218	218	248	248	248
B	72	90	103	112	132	145	170	170	196	196	230	230	230
C	61	77	88	98	119	128	151	151	176	176	204	204	204
D	3xM4	3xM5	3xM5	3xM6	3xM6	3xM8	3xM8	3xM8	6xM10	6xM10	6xM10	6xM10	9xM10
Delik toleransı K3'e kadar H7, diğerleri + 0,01/-0,01 Tollerance hole till size K3 H7, others + 0,01/-0,01 Bohrungstoleranz bis Grösse K3 H7, andere + 0,01/-0,01 E	35	44	62	69	79	80	90	90	103	103	132	132	132
F	10-11 12	11-14 15	11-15	14-25	24-25 28	25-30 34	25-30 34	25 H40 34 H60	24-34	34 H60 48	44-45 48	44-45 48	44-45 48-50
G	20	26	26	42	60	60	60	60	60	60	60	60	60
H	50	61	61	79	104	104	104	104	104	104	104	104	104
I	1,5	1,5	1,5	1,5	1,5	1,5	1,5	1,5	1,5	1,5	1,5	1,5	1,5
L	18	20	20	20	25	30	30	60	40	60	40	60	80
M (max)	9	9	9	9,5	18	16	14	14	18	18	18	18	18
N	4	4	4	5,5	8	8	8	8	8	8	8	8	8
O	0,2	0,2	0,2	0,2	0,3	0,3	0,3	0,3	0,3	0,4	0,4	0,4	0,4÷0,5
P	38,5	41,5	47	46,5	64	69,5	79	101,5	78	98	80	105	130

Not : Fren çalıştırılmadan önce statik fren momenti tabloda verilen değerlere göre ± % 20 değişiklik gösterebilir.
Note : The brake before running in, the static braking torque value could change by +20% from the reported value.
Notizen : Bevor die Bremse eingefahren ist, kann das statische Bremsmoment um etwa ± 20 % vom Tabellenwert abweichen.

POLAT GROUP REDÜKTÖR SAN. ve TİC. A.Ş.
● ATA OSB Mah. Astim 1.Cad. No: 4 Efeler - Aydın / TÜRKİYE
● T: +90 256 231 19 12 ● F: +90 256 231 19 17 ● info@pgr.com.tr ● www.pgr.com.tr